Deutsches Institut für Bautechnik DIBt

Member of EOTA
www.eota.eu

Approval body for construction products and types of construction

Bautechnisches Prüfamt

An institution established by the Federal and Laender Governments

Designated according to Article 29 of Regulation (EU) No 305/2011 and member of EOTA (European Organisation for Technical Assessment)

European Technical Assessment

ETA-15/0554 of 18 November 2025

English translation prepared by DIBt - Original version in German language

General Part

Technical Assessment Body issuing the European Technical Assessment:	Deutsches Institut für Bautechnik
Trade name of the construction product	Iinjection system UPM 33 for masonry
Product family to which the construction product belongs	Metal Injection anchors for use in masonry
Manufacturer	Upat Vertriebs GmbH Bebelstraße 11 79108 Freiburg im Breisgau GERMANY
Manufacturing plant	Upat
This European Technical Assessment contains	68 pages including 3 annexes which form an integral part of this assessment
This European Technical Assessment is issued in accordance with Regulation (EU) No 305/2011, on the basis of	EAD 330076-01-0604, Edition 10/2022
This version replaces	ETA-15/0554 issued on 27 August 2015

Deutsches Institut für Bautechnik
Kolonnenstraße 30 B | 10829 Berlin | GERMANY | Phone: +49 30 78730-0 | Fax: +49 30 78730-320 | Email: dibt@dibt.de | www.dibt.de

The European Technical Assessment is issued by the Technical Assessment Body in its official language. Translations of this European Technical Assessment in other languages shall fully correspond to the original issued document and shall be identified as such.

Communication of this European Technical Assessment, including transmission by electronic means, shall be in full. However, partial reproduction may only be made with the written consent of the issuing Technical Assessment Body. Any partial reproduction shall be identified as such.

This European Technical Assessment may be withdrawn by the issuing Technical Assessment Body, in particular pursuant to information by the Commission in accordance with Article 25(3) of Regulation (EU) No 305/2011.

Specific Part

1 Technical description of the product

The Upat injection system UPM 33 for masonry is a bonded anchor (injection type) consisting of a mortar cartridge with injection mortar Upat UPM 33, UPM 33 Relax and UPM 33 Express, a perforated sieve sleeve and an anchor rod with hexagon nut and washer or an internal threaded rod. The steel elements are made of zinc coated steel, stainless steel or high corrosion resistant steel.

The anchor rod is placed into a drilled hole filled with injection mortar and is anchored via the bond between steel element, injection mortar and masonry and mechanical interlock.

The product description is given in Annex A.

2 Specification of the intended use in accordance with the applicable European Assessment Document

The performances given in Section 3 are only valid if the fastener is used in compliance with the specifications and conditions given in Annex B.

The verifications and assessment methods on which this European Technical Assessment is based lead to the assumption of a working life of the fastener of at least 50 years. The indications given on the working life cannot be interpreted as a guarantee given by the producer, but are to be regarded only as a means for choosing the right products in relation to the expected economically reasonable working life of the works.

3 Performance of the product and references to the methods used for its assessment

3.1 Mechanical resistance and stability (BWR 1)

Essential characteristic	Performance
Characteristic resistance for static and quasi-static loading	See Annexes B4 to B6, B14, B15, C1 to C44
Characteristic resistance and displacements for seismic loading	No performance assessed

3.2 Safety in case of fire (BWR 2)

Essential characteristic	Performance
Reaction to fire	Class A1
Resistance to fire under tension and shear loading with and without lever arm. Minimum edge distances and spacing	No performance assessed

3.3 Hygiene, health and the environment (BWR 3)

Essential characteristic	Performance
Content, emission and/or release of dangerous substances	No performance assessed

4 Assessment and verification of constancy of performance (AVCP) system applied, with reference to its legal base

In accordance with the European Assessment Document EAD 330076-01-0604 the applicable European legal act is: [97/177/EC].

The system to be applied is: 1

5 Technical details necessary for the implementation of the AVCP system, as provided for in the applicable European Assessment Document

Technical details necessary for the implementation of the AVCP system are laid down in the control plan deposited with Deutsches Institut für Bautechnik.

Issued in Berlin on 18 November 2025 by Deutsches Institut für Bautechnik

Dipl.-Ing. Beatrix Wittstock
Head of Section

beglaubigt:
Baderschneider

Installation conditions part 1

Anchor rods with perforated sleeve UPM SH K; Installation in perforated and solid brick masonry

Pre-positioned installation:

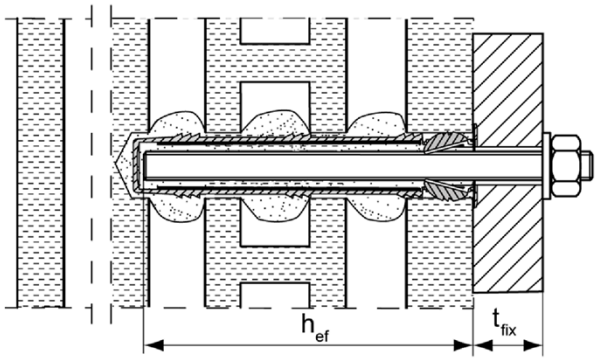

Installation with render bridge

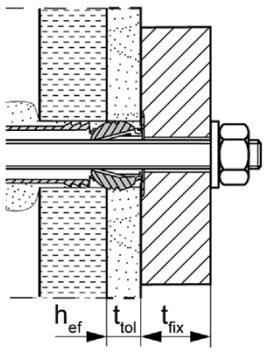

Size of the perforated sleeve: UPM SH 12x50 K, UPM SH 12x85 K, UPM SH 16x85 K, UPM SH 16x130 K, UPM SH 20x85 K, UPM SH 20x130 K, UPM SH 20x200 K

Internal threaded anchor UPM-I with perforated sleeve UPM SH K;
Installation in perforated and solid brick masonry

Pre-positioned installation:

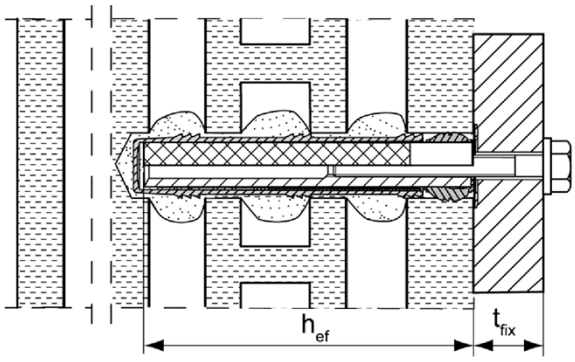

Figures not to scale

h_{ef} = effective anchorage depth

t_{fix} = thickness of fixture

t_{tol} = thickness of unbearing layer (e.g. plaster)

Upat injection system UPM 33 for masonry

Product description
Installation conditions part 1,
Anchor rods and internal threaded anchor with perforated sleeve

Annex A1

Installation conditions part 2

Anchor rods without perforated sleeve UPM SH K;
installation in solid brick masonry and autoclaved aerated concrete

Pre-positioned installation:

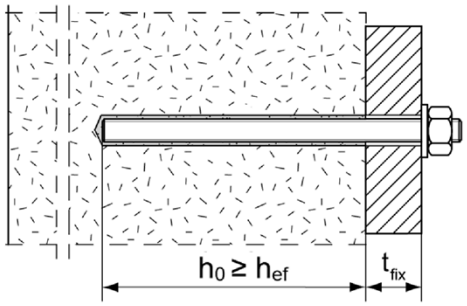

Push through installation: Annular gap filled with mortar

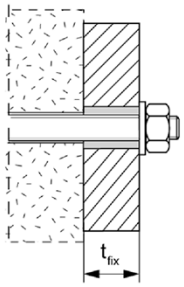

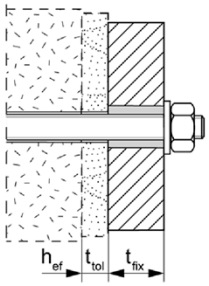

Installation with render bridge

Internal threaded anchors UPM-I without perforated sleeve UPM SH K;
installation in solid brick masonry and autoclaved aerated concrete

Pre-positioned installation:

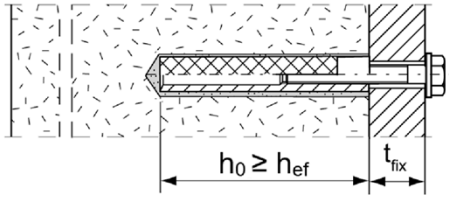

Installation with render bridge

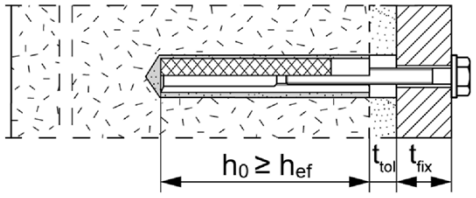

Figures not to scale

h_0 = depth of drill hole
h_{ef} = effective anchorage depth
t_{tol} = thickness of unbearing layer (e.g. plaster)
t_{fix} = thickness of fixture

Upat injection system UPM 33 for masonry

Product description
Installation conditions part 2, Anchor rods and internal threaded anchor without perforated sleeve / with centring sleeve

Annex A2

Overview system components part 1

Mortar cartridge (shuttle cartridge) with sealing cap

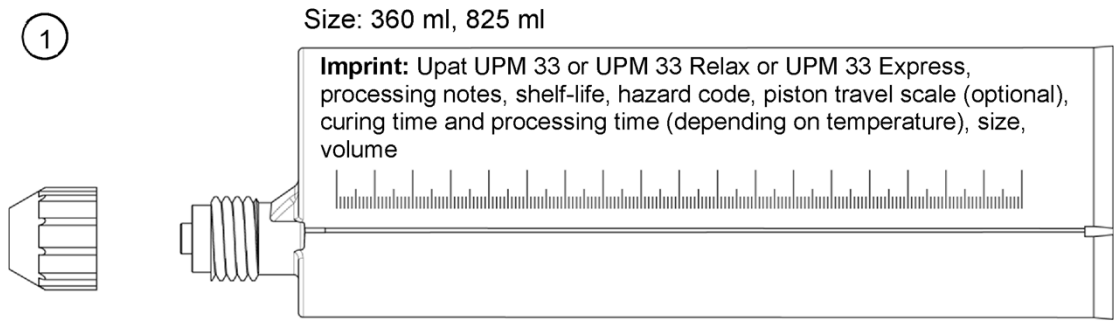

Mortar cartridge (coaxial cartridge) with sealing cap

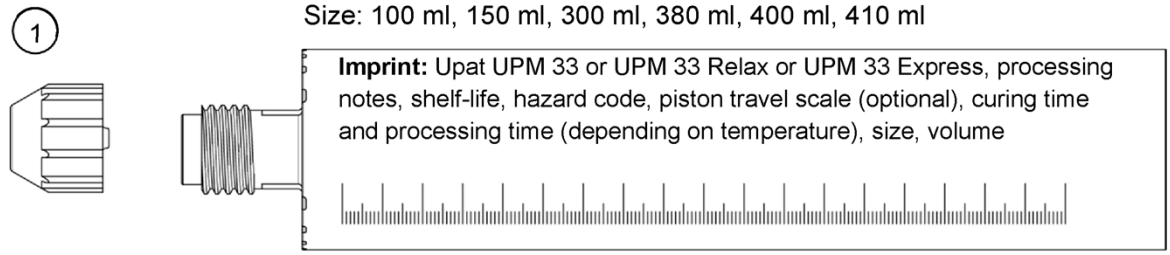

Static mixer Upat MR Plus for injection cartridges up to 410 ml

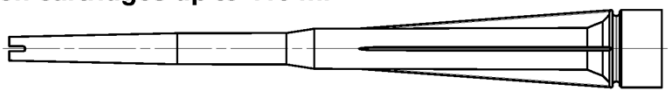

Static mixer Upat JMR for injection cartridges 825 ml

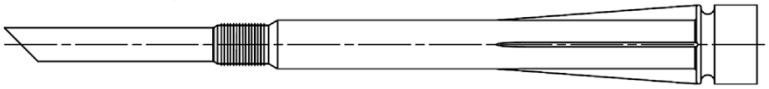

Extension tube Ø 9 for static mixer Upat MR Plus;
Extension tube Ø 9 or Ø 15 for static mixer Upat JMR

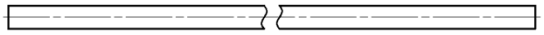

Cleaning brush UP BS

Blow-out pump UPM AB

compressed-air cleaning tool

Figures not to scale

Upat injection system UPM 33 for masonry

Product description
Overview system components part 1: cartridge / static mixer / cleaning tools

Annex A3

Overview system components part 2

Upat anchor rod

(2)

Size: M6, M8, M10, M12, M16

Internal threaded anchor UPM-I

(5) 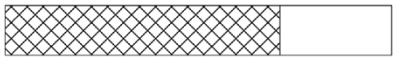

Size: 11x85 M6 / M8
15x85 M10 / M12

Perforated sleeve UPM SH K

(7) 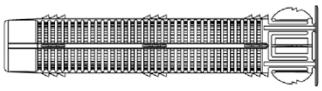

Size: UPM SH 12x50 K
UPM SH 12x85 K
UPM SH 16x85 K
UPM SH 20x85 K

(7)

Size: UPM SH 16x130 K
UPM SH 20x130 K
UPM SH 20x200 K

Washer

(3)

Hexagon nut

(4)

Figures not to scale

Upat injection system UPM 33 for masonry

Product description
Overview system components part 2: steel parts / perforated sleeve

Annex A4

Table A5.1: Materials

Part	Designation	Material		
1	Mortar cartridge	Mortar, hardener; filler		
		Steel	Stainless steel R	High corrosion resistant steel HCR
		zinc plated	acc. to EN 10088-1:2023 Corrosion resistance class CRC III acc. to EN 1993-1-4:2006+A1:2015	acc. to EN 10088-1:2023 Corrosion resistance class CRC V acc. to EN 1993-1-4:2006+A1:2015
2	Anchor rod	Property class 4.6; 4.8; 5.8 or 8.8; EN ISO 898-1: 2013 zinc plated ≥ 5µm, ISO 4042:2022 or hot-dip galvanised EN ISO 10684:2004+AC:2009 f_{uk} ≤ 1000 N/mm² A_5 > 8% fracture elongation	Property class 50, 70 or 80 EN ISO 3506-1:2020 1.4401; 1.4404; 1.4578; 1.4571; 1.4439; 1.4362; 1.4062; 1.4662; 1.4462; EN 10088-1:2023 f_{uk} ≤ 1000 N/mm² A_5 > 8% fracture elongation	Property class 50 or 80 EN ISO 3506-1:2020 or property class 70 with f_{yk}= 560 N/mm² 1.4565; 1.4529 EN 10088-1:2023 f_{uk} ≤ 1000 N/mm² A_5 > 8% fracture elongation
3	Washer ISO 7089:2000	zinc plated ≥ 5µm, ISO 4042:2022 or hot-dip galvanised EN ISO 10684:2004+AC:2009	1.4401; 1.4404; 1.4578; 1.4571; 1.4439; 1.4362; EN 10088-1:2023	1.4565;1.4529 EN 10088-1:2023
4	Hexagon nut	Property class 5 or 8; EN ISO 898-2:2022 zinc plated ≥ 5µm, ISO 4042:2022 or hot-dip galvanised EN ISO 10684:2004+AC:2009	Property class 50, 70 or 80 EN ISO 3506-2:2020 1.4401; 1.4404; 1.4578; 1.4571; 1.4439; 1.4362; EN 10088-1:2023	Property class 50, 70 or 80 EN ISO 3506-2:2020 1.4565; 1.4529 EN 10088-1:2023
5	Internal threaded anchor UPM-I	Property class 5.8; EN ISO 898-1:2013 zinc plated ≥ 5µm, ISO 4042:2022	Property class 70 EN ISO 3506-1:2020 1.4401; 1.4404; 1.4578; 1.4571; 1.4439; 1.4362; EN 10088-1:2023	Property class 70 EN ISO 3506-1:2020 1.4565; 1.4529 EN 10088-1:2023
6	Commercial standard screw or threaded rod for internal threaded anchor UPM-I	Property class 4.6, 5.8 or 8.8; EN ISO 898-1:2013 zinc plated ≥ 5µm, ISO 4042:2022	Property class 70 EN ISO 3506-1:2020 1.4401; 1.4404; 1.4578; 1.4571; 1.4439; 1.4362; EN 10088-1:2023	Property class 70 EN ISO 3506-1:2020 1.4565; 1.4529 EN 10088-1:2023
7	Perforated sleeve	PP / PE		

Upat injection system UPM 33 for masonry

Product description
Materials

Annex A5

Specifications of intended use part 1

Table B1.1: Overview use and performance categories

Anchorages subject to		**Upat injection system UPM 33 for masonry**	
Hole drilling with hammer drill mode		all bricks; without C22 to C25, C31 to C32	
Hole drilling with rotary drill mode		all bricks	
Static and quasi static load, in masonry		all bricks	
Installation	Pre-positioned installation	Anchor rod or internal threaded anchor (in solid brick masonry and autoclaved aerated concrete)	Perforated sleeve with anchor rod or internal threaded anchor (in perforated and solid brick masonry) Size: UPM SH 12x50 K UPM SH 12x85 K UPM SH 16x85 K UPM SH 16x130 K UPM SH 20x85 K UPM SH 20x130 K UPM SH 20x200 K
	Push through installation	Anchor rod; use in cylindrical drill hole (in solid brick masonry and autoclaved aerated concrete)	
Installation and use conditions	conditions d/d (dry/dry)	all bricks	
	conditions w/d (wet/dry)		
	conditions w/w (wet/wet)		
Installation direction		D3 (downward and horizontal installation)	
Installation temperature		$T_{i,min}$ = -5 °C to $T_{i,max}$ = +40 °C	
In-service temperature	Temperature range Tb	-40 °C to +80 °C	(max. short term temperature +80 °C max. long term temperature +50 °C)
	Temperature range Tc	-40 °C to +120 °C	(max. short term temperature +120 °C; max. long term temperature +72 °C)

Upat injection system UPM 33 for masonry

Intended Use
Specifications part 1

Annex B1

Specifications of intended use part 2

Anchorages subject to:

- Static and quasi-static loads

Base materials:

- Solid brick masonry (base material group b) and autoclaved aerated concrete (base material group d), acc. to Annex B10.
- Hollow brick masonry (base material group c), according to Annex B10.
- For minimum thickness of masonry member is h_{ef}+30mm.
- Mortar strength class of the masonry M2,5 at minimum according to EN 998-2:2016.
- For other bricks in solid masonry, hollow or perforated masonry and autoclaved aerated concrete, the characteristic resistance of the anchor may be determined by job site tests according to EOTA Technical Report TR 053:2022-07 under consideration of the β-factor according to Annex C44, Table C44.1.

  Note (only applies to solid bricks and autoclaved aerated concrete):
  The characteristic resistance is also valid for larger brick sizes, higher compressive strength and higher raw density of the masonry unit.

Temperature Range:

- **Tb:** From - 40°C to +80°C (max. short term temperature +80°C and max. long term temperature +50°C)
- **Tc:** From -40°C to +120°C (max. short term temperature +120°C and max. long term temperature +72°C)

Use conditions (Environmental conditions):

- Structures subject to dry internal conditions (zinc plated steel, stainless steel or high corrosion resistant steel)
- For all other conditions according to EN 1993-1-4:2006+A1:2015 corresponding to corrosion resistance classes to Annex A5, Table A5.1.

Upat injection system UPM 33 for masonry	**Annex B2**
Intended Use Specifications part 2	

Specifications of intended use part 3 continued

Design:

- The anchorages have to be designed in accordance with EOTA Technical Report TR 054:2023-12 (included the dimensioning for fire exposure), Design method A under the responsibility of a designer experienced in anchorages and masonry work.

  Applies to all bricks, if no other values are specified:

  $N_{Rk} = N_{Rk,b} = N_{Rk,p} = N_{Rk,b,c} = N_{Rk,p,c}$

  $V_{Rk} = V_{Rk,b} = V_{Rk,c,II} = V_{Rk,c,\perp}$

  For the calculation of pulling out a brick under tension loading $\mathbf{N_{Rk,pb}}$ or pushing out a brick under shear loading $\mathbf{V_{Rk,pb}}$ see EOTA Technical Report TR 054:2023-12.

  $\mathbf{N_{Rk,s}}$, $\mathbf{V_{Rk,s}}$ and $\mathbf{M^0_{Rk,s}}$ see annexes C1-C3.

  Factors for job site tests and displacements see annex C44.

- Verifiable calculation notes and drawings have to be prepared taking into account the relevant masonry in the region of the anchorage, the loads to be transmitted and their transmission to the supports of the structure. The position of the anchor is to be indicated on the design drawings.

Installation:

- Conditions d/d: - Installation and use in dry structures.
- Conditions w/w: - Installation and use in dry and wet structures.
- Conditions w/d: - Installation in wet structures and use in dry structures.
- Hole drilling see Annex C (drilling method).
- In case of aborted hole: The hole shall be filled with injection mortar UPM 33.
- Bridging of unbearing layer (e.g., plaster) is permitted for masonry with solid bricks and cylindrical drill hole. At perforated brick masonry see Annex B6, Table B6.1.
- Anchor installation carried out by appropriately qualified personnel and under the supervision of the person responsible for technical matters of the site.
- Fastening screws or anchor rods (including nut and washer) must comply with the appropriate material and property class of the Upat internal threaded anchor UPM-I mentioned in Annex A5, Table A5.1.
- Minimum curing time see Annex B7, Table B7.3.
- Commercial standard threaded rods, washers and hexagon nuts may also be used if the following requirements are fulfilled:

  Material dimensions and mechanical properties of the metal parts according to the specifications are given in Annex A5, Table A5.1

  Conformation of material and mechanical properties of the metal parts by inspection certificate 3.1 according to EN 10204:2004, the documents shall be stored.

  Marking of the anchor rod with the envisage embedment depth. This may be done by the manufacturer of the rod or by a person on job site.

Upat injection system UPM 33 for masonry	**Annex B3**
Intended Use Specifications part 3 continued	

Table B4.1: Installation parameters for anchor rods in solid bricks and autoclaved aerated concrete without perforated sleeves

Anchor rod	Thread	M6	M8	M10	M12	M16
Nominal drill hole diameter	d_0 [mm]	8	10	12	14	18
Effective anchorage depth h_{ef} [1)] in AAC cylindrical drill hole	$h_{0,min} \geq h_{ef,min}$ [mm]	100				
	$h_{0,max} \geq h_{ef,max}$ [mm]	h-30, ≤200				
Effective anchorage depth h_{ef} [1)] in solid brick (depth of drill hole $h_0 \geq h_{ef}$)	$h_{ef,min}$ [mm]	50				
	$h_{ef,max}$ [mm]	h-30, ≤200				
Diameter of clearance hole in the fixture	pre-positioning $d_f \leq$ [mm]	7	9	12	14	18
	push through $d_f \leq$ [mm]	9	11	14	16	20
Diameter of cleaning brush	$d_b \geq$ [mm]	see Table B7.1				
Maximum installation torque	T_{inst} [Nm]	see parameters of brick				

[1)] $h_{ef,min} \leq h_{ef} \leq h_{ef,max}$ is possible.

Upat anchor rods M6, M8, M10, M12, M16

Marking (on random place) Upat anchor rod:

Steel zinc plated PC[1)] 8.8	• or +	Steel hot-dip galvanised PC[1)] 8.8	•
High corrosion resistant steel HCR PC[1)] 50	•	High corrosion resistant steel HCR PC[1)] 70	–
High corrosion resistant steel HCR PC[1)] 80	(	Stainless steel R property class 50	~
Stainless steel R property class 80	✳		

Alternatively: Colour coding according to DIN 976-1: 2016; property class 4.6 marking according to EN ISO 898-1:2013

[1)] PC = property class

Installation conditions:

Anchor rod in cylindrical drill hole

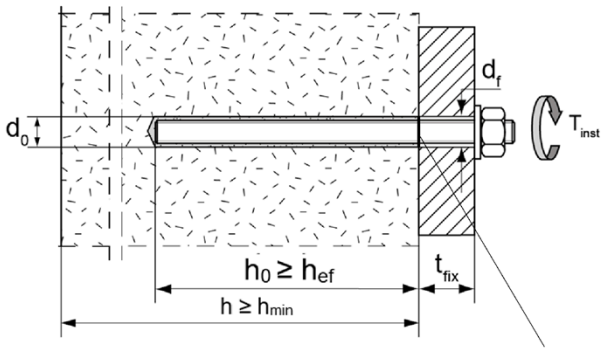

Setting depth mark

Figures not to scale

Upat injection system UPM 33 for masonry

Intended Use
Installation parameters for anchor rods without perforated sleeve

Annex B4

Table B5.1: Installation parameters for internal threaded anchors UPM-I in solid bricks and autoclaved aerated concrete without perforated sleeves

Internal threaded anchor UPM-I		**11x85 M6**	**11x85 M8**	**15x85 M10**	**15x85 M12**
Diameter of anchor	d_H [mm]	11		15	
Nominal drill hole diameter	d_0 [mm]	14		18	
Length of anchor	L_H [mm]	85			
Effective anchorage depth	$h_0 \geq h_{ef}$ [mm]	85			
Diameter of cleaning brush	$d_b \geq$ [mm]	see Table B7.1			
Maximum installation torque	T_{inst} [Nm]	see parameters of brick			
Diameter of clearance hole in the fixture	d_f [mm]	7	9	12	14
Screw-in depth	$l_{E,min}$ [mm]	6	8	10	12
	$l_{E,max}$ [mm]	60			

Upat Internal threaded anchor UPM-I

UPM-I 11x85 M6, UPM-I 11x85 M8

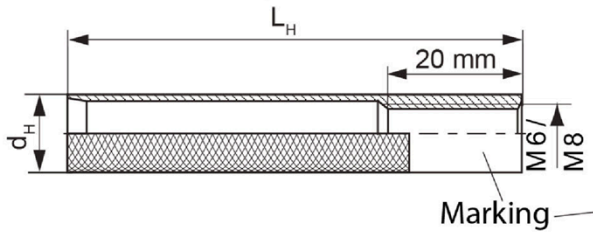

UPM-I 15x85 M10, UPM-I 15x85 M12

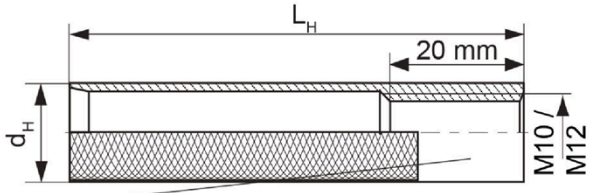

Marking:

Size, e.g. **M8**, Stainless steel: R, e.g. **M8 R**, High corrosion resistant steel: HCR, e.g. **M8 HCR**

Installation conditions:

Internal threaded anchor in cylindrical drill hole

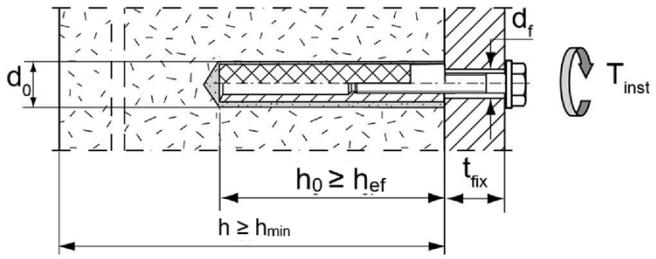

Figures not to scale

Upat injection system UPM 33 for masonry

Intended Use
Installation parameters for internal threaded rods UPM-I without perforated sleeve

Annex B5

Table B6.1: Installation parameters for anchor rods and internal threaded anchors UPM-I with perforated sleeves

perforated sleeve UPM SH K		**12x50**	**12x85**[2)]	**16x85**	**16x130**[2)]	**20x85**	**20x130**[2)]	**20x200**[2)]
Nominal drill hole diameter $d_0 = D_{sleeve,nom}$	d_0 [mm]	12		16		20		
Depth of drill hole	h_0 [mm]	55	90	90	135	90	135	205
Effective anchorage depth	$h_{ef.min}$ [mm]	50	65	85	110	85	110	180
	$h_{ef.max}$ [mm]	50	85	85	130	85	130	200
Size of threaded rod	[-]	M6 and M8		M8 and M10		M12 and M16		
Size of internal threaded anchor UPM-I		-	-	11x85	-	15x85	-	-
Diameter of cleaning brush[1)]	$d_b \geq$ [mm]	see Table B7.1						
Maximum installation torque	T_{inst} [Nm]	see parameters of brick						

[1)] Only for solid areas in hollow bricks and solid bricks.

[2)] Bridging of unbearing layer (e.g. plaster) is possible. When reducing the effective anchorage depth $h_{ef,\,min}$, the values of the next shorter perforated sleeve of the same diameter must be used. The smaller value of charastereristic resistance must be taken.

Perforated sleeve

UPM SH 12x50 K; UPM SH 12x85 K; UPM SH 16x85 K; UPM SH 16x130 K;
UPM SH 20x85 K; UPM SH 20x130 K; UPM SH 20x200 K

Marking:
Size $D_{sleeve,\,nom}$ x L_{sleeve}
(e.g.: 16x85)

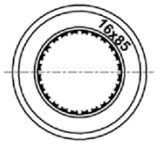

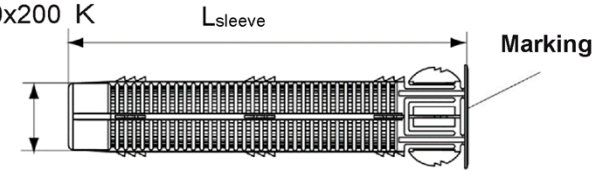

Upat Internal threaded anchor UPM-I

UPM-I 11x85 M6, UPM-I 11x85 M8

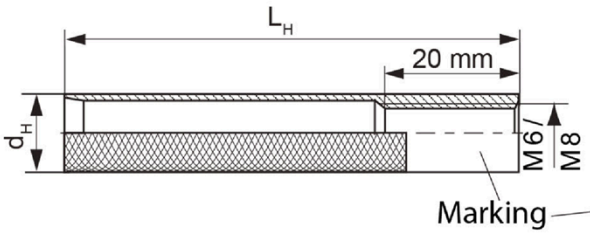

UPM-I 15x85 M10, UPM-I 15x85 M12

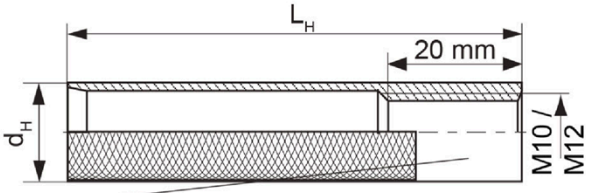

Installation conditions:

Anchor rod with perforated sleeve

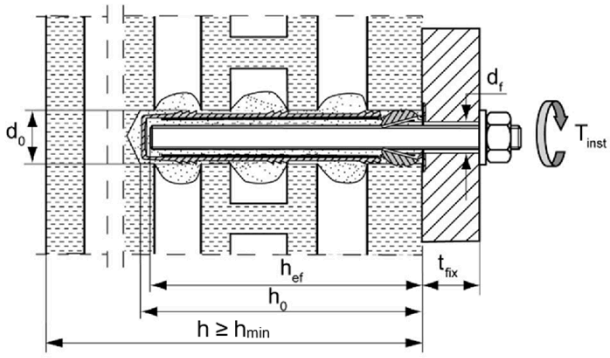

Internal threaded anchor with perforated sleeve

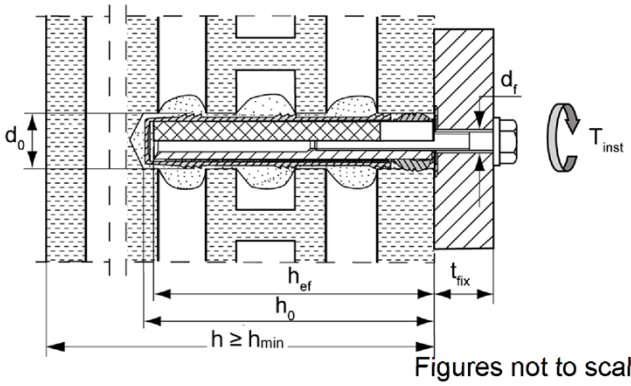

Figures not to scale

Upat injection system UPM 33 for masonry

Intended Use
Installation parameters for anchor rods and internal threaded anchors UPM-I with perforated sleeve

Annex B6

Table B7.1: Parameters of the cleaning brush UP BS (steel brush with steel bristles)

The size of the cleaning brush refers to the drill hole diameter

Drill hole diameter	d_0 [mm]	8	10	12	14	16	18	20	22
Brush diameter	d_b [mm]	9	11	14	16	20	20	25	25

Only for solid bricks and autoclaved aerated concrete or solid areas of perforated bricks and hollow blocks

Table B7.2: Conditions for use static mixer without an extension tube

Nominal drill hole diameter	d_0	[mm]	10	12	14	16	18	20	22
Drill hole depth h_0 by using	Upat MR Plus	[mm]	≤90		≤120	≤140	≤150	≤160	≤170
	Upat JMR	[mm]	-		≤90			≤260	

Table B7.3: Maximum processing times and minimum curing times
(During the curing time of the mortar the masonry temperature may not fall below the listed minimum temperature)

Temperature at anchoring base [°C]	Maximum processing time [2] t_{work}			Minimum curing time [1), 2)] t_{cure}		
	UPM 33 Express	UPM 33	UPM 33 Relax	UPM 33 Express	UPM 33	UPM 33 Relax
> -5 to 0	5 min	-	-	3 h	24 h	-
> 0 to 5	5 min	13 min	> 20 min	3 h	3 h	6 h
> 5 to 10	3 min	9 min	20 min	50 min	90 min	3 h
> 10 to 20	1 min	5 min	10 min	30 min	60 min	2 h
> 20 to 30	-	4 min	6 min	-	45 min	60 min
> 30 to 40	-	2 min	4 min	-	35 min	30 min

[1)] For wet bricks the curing time must be doubled.

[2)] Minimum cartridge temperature +5°C.

Figures not to scale

Upat injection system UPM 33 for masonry

Intended Use
Cleaning brush (steel brush)
Maximum processing times and minimum curing times

Annex B7

Installation instruction part 1

Installation in solid brick and autoclaved aerated concrete (without perforated sleeve)

1	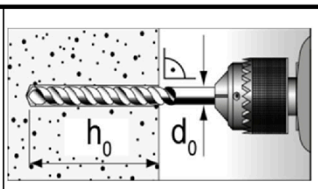	Drill the hole (drilling method see Annex C of the respective brick) depth of drill hole $\mathbf{h_0}$ and drill hole diameter $\mathbf{d_0}$ see **Table B4.1; B5.1**.		
2	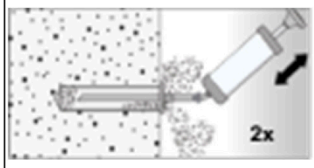	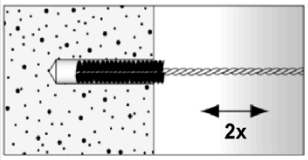	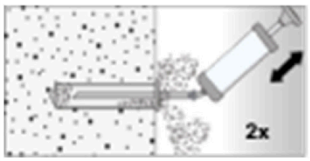	Blow out the drill hole twice. Brush twice and blow out twice again.
3	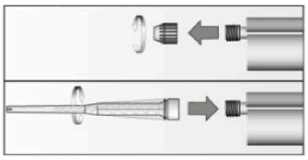	Remove the sealing cap. Screw on the static mixer. (the spiral in the static mixer must be clearly visible).		
4	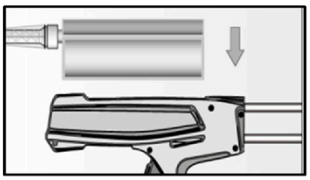	Place the cartridge into a suitable dispenser.	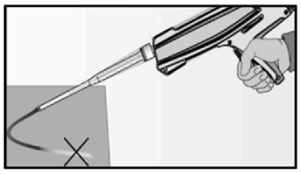	Press out approximately 10 cm of mortar until the resin is permanently grey in colour. Mortar which is not grey in colour will not cure and must be disposed of.
5	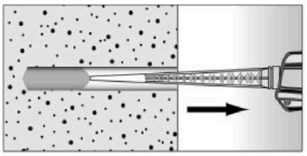	Fill approximetly 2/3 of the drill hole with mortar beginning from the bottom of the hole[1]. Avoid bubbles!	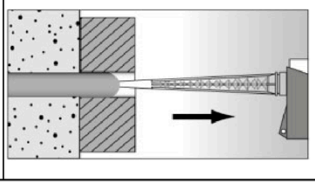	For push through installation fill the annular clearance with mortar.
6	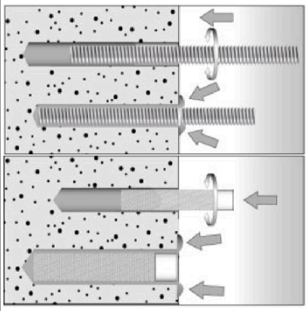	Only use clean and oil-free metal parts. Mark the anchor rod for setting depth. Insert the anchor rod or internal threaded anchor UPM-I by hand using light turning motions. When reaching the setting depth marking, excess mortar must emerge from the mouth of the drill hole.		
7		Do not touch. Minimum curing time see **Table B7.3**.	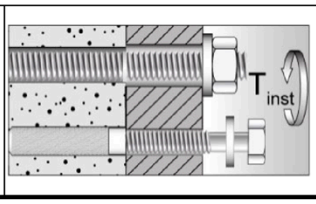	Mounting the fixture. max T_{inst} see parameter of brick in **Annex C**.

[1] Exact volume of mortar see manufacturer´s specification.

Upat injection system UPM 33 for masonry	**Annex B8**
Intended Use Installation instruction (without perforated sleeve) part 1	

Installation instruction part 2

Installation in perforated or solid brick with perforated sleeve

1	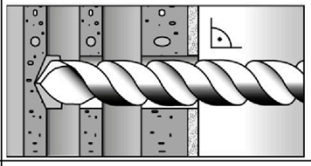	Drill the hole (drilling method see Annex C of the respective brick). depth of drill hole $\mathbf{h_0}$ and drill hole diameter $\mathbf{d_0}$ see **Table B6.1**	When install perforated sleeves in solid bricks or solid areas of hollow bricks, also clean the hole by blowing out and brushing.	
2	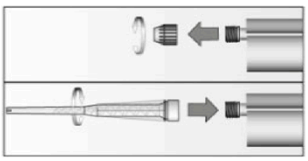	Remove the sealing cap. Screw on the static mixer. (the spiral in the static mixer must be clearly visible).		
3	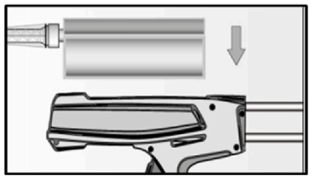	Place the cartridge into a suitable dispenser.	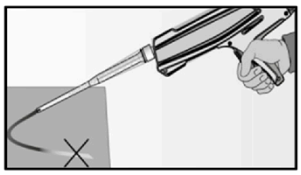	Press out approximately 10 cm of mortar until the resin is permanently grey in colour. Mortar which is not grey in colour will not cure and must be disposed of.
4	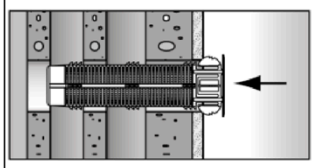	Insert the perforated sleeve flush with the surface of the masonry or plaster.	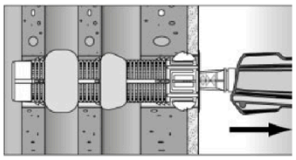	Fill the perforated sleeve completely with mortar beginning from the bottom of the hole[1].
5	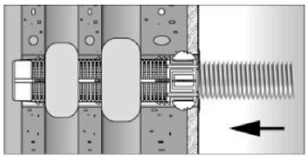	Only use clean and oil-free metal parts. Mark the ancher rod for setting depth. Insert the anchor rod or the internal threaded anchor UPM-I by hand using light turning motions until reaching the setting depth marking (anchor rod) or flush with the surface (internal threaded anchor).		
6		Do not touch. Minimum curing time see **Table B7.3**	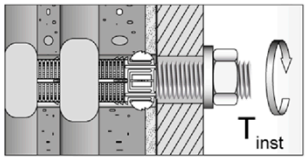	Mounting the fixture. max T_{inst} see parameter of brick in **Annex C**.

[1] Exact volume of mortar see manufacturer´s specification.

Upat injection system UPM 33 for masonry	**Annex B9**
Intended Use Installation instruction (with perforated sleeve) part 2	

Table B10.1: Overview of assessed bricks

Kind of masonry	Brick format [mm]	Mean compressive strength [N/mm²]	Main country of origin	Mean gross density ρ [kg/dm³]	Annex
Solid brick Mz					
Solid brick Mz	**NF** ≥240x115x71	15 / 25 / 35	Germany	≥1,8	C4 – C7
	2DF ≥240x115x113	12,5 / 20	Germany	≥1,8	C8 / C9
	≥ 245x118x54	12,5 / 25	Italy	≥1,8	C10 / C11
Solid calcium silicate (sand- lime) brick KS / perforated calcium silicate (sand- lime) brick KSL					
Solid calcium silicate brick KS	**NF** ≥240x115x71	15 / 25 / 35	Germany	≥2,0	C12 / C13
	≥ 240x115x113	12,5 / 25	Germany	≥1,8	C14 / C15
Perforated calcium silicate brick KSL	**3DF** 240x175x113	10 / 12,5 / 15 / 20 / 25	Germany	≥1,4	C16 / C17
Vertical perforated brick HLz					
Vertical perforated brick HLz	370x240x237	5 / 7,5 / 10 / 12,5 / 15	Germany	≥1,0	C18 / C19
	500x175x237	5 / 7,5 / 10 / 12,5 / 15	Germany	≥1,0	C18 / C19
	2DF 240x115x113	7,5 / 12,5 / 20 / 25 / 35	Germany	≥1,4	C20 / C21
	248x365x249	10 / 12,5 / 15	Germany	≥0,7	C22 / C23
	248x425x248	5 / 7,5 / 10	Germany	≥0,8	C24 / C25
	255x120x118	2,5 / 5 / 8 / 10 / 12,5 / 15	Italy	≥1,0	C26 – C28
	253x300x240	2,5 / 5 / 8	Austria	≥0,8	C29 / C30
	250x440x250	8 / 10 / 12,5	Austria	≥0,7	C31 / C32
	365x248x245	10	Austria	≥0,6	C33 / C34
	240x175x113	12,5	Germany	≥0,9	C35 / C36
Horizontal perforated brick LLz					
Horizontal perforated brick LLz	248x78x250	2,5 / 5 / 8	Italy	≥0,7	C37 / C38
Light-weight concrete hollow block Hbl					
Light-weight concrete hollow block Hbl	362x240x240	2,5 / 5	Germany	≥1,0	C39 / C40
Autoclaved aerated concrete (AAC)					
PP2 / AAC	-	2,5	Germany	0,35	C41 – C43
PP4 / AAC	-	5	Germany	0,5	C41 – C43
PP6 / AAC	-	8	Germany	0,65	C41 – C43

Upat injection system UPM 33 for masonry

Intended Use
Overview of assessed bricks

Annex B10

Table B11.1: Overview dimensions of perforated and hollow bricks part 1

Perforated calcium silicate brick KSL, 3DF,
EN 771-2:2011+A1:2015; e.g. KS Wemding according to Annex C16

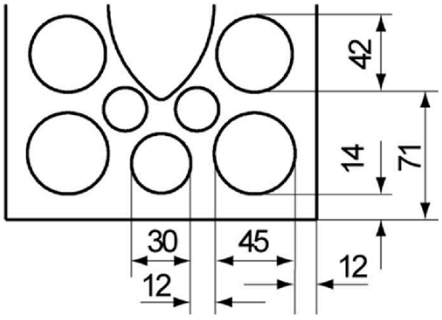

Vertical perforated brick HLz, EN 771-1:2011+A1:2015: e.g. Wienerberger, Poroton according to Annex C18

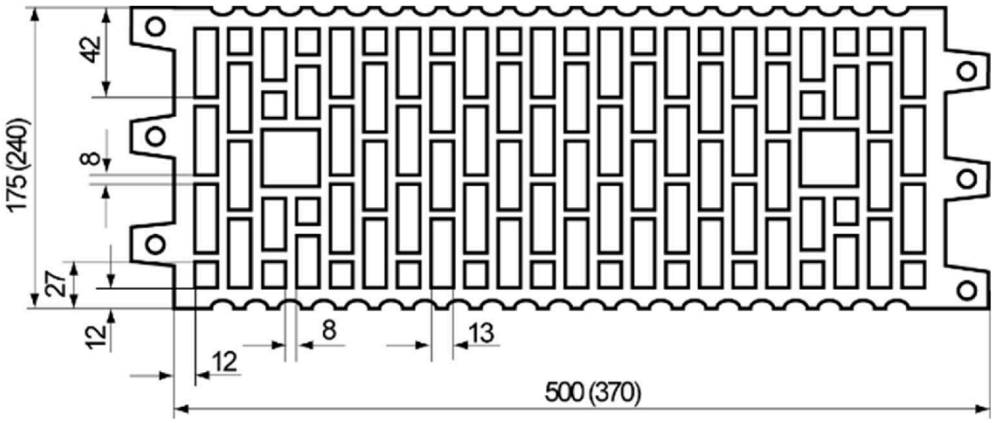

Vertical perforated brick HLz, 2DF,
EN 771-1:2011+A1:2015; e.g. Wienerberger according to Annex C20

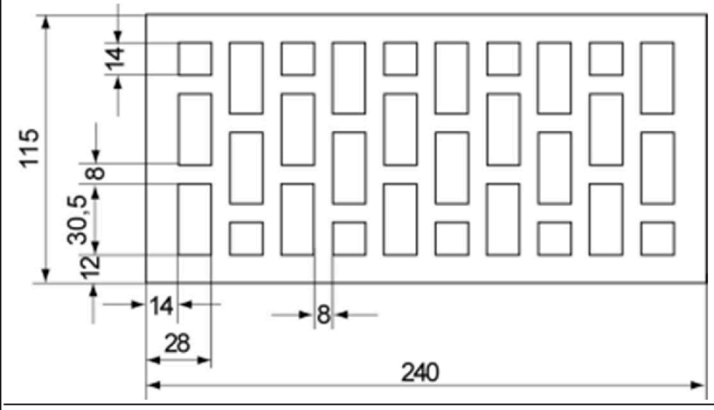

Vertical perforated brick HLz, T10, T11,
EN 771-1:2011+A1:2015; according to Annex C22

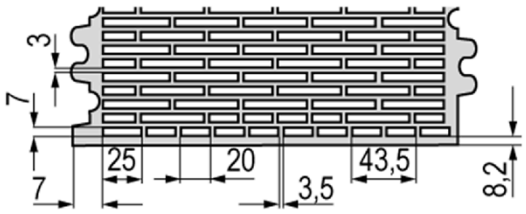

Measures in [mm]
Figures not to scale

Upat injection system UPM 33 for masonry

Intended Use
Overview dimensions of perforated and hollow bricks part 1

Annex B11

Table B12.1: Overview dimensions of perforated and hollow bricks part 2

Vertical perforated brick HLz, FZ 7, filled with mineral wool, EN 771-1:2015; according to Annex C24

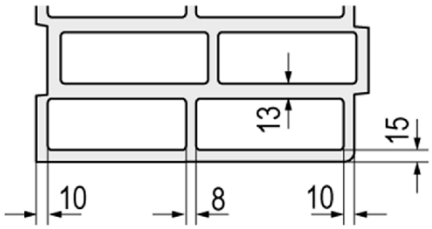

Vertical perforated brick HLz, EN 771-1:2011+A1:2015; e.g. Wienerberger according to Annex C26

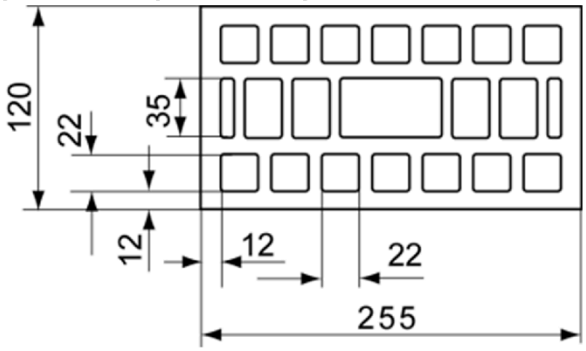

Vertical perforated brick HLz, EN 771-1:2011+A1:2015; e.g. Ziegelwerk Brenna according to Annex C29

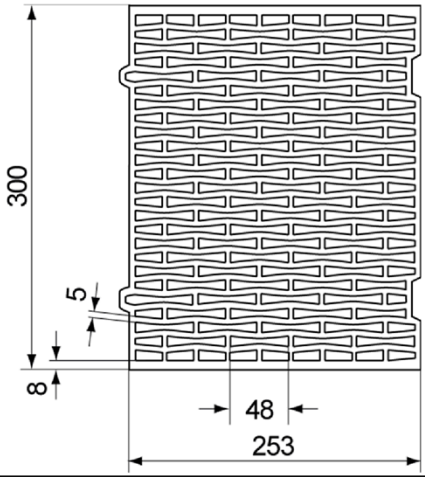

Vertical perforated brick HLz, Porotherm W 44, filled with mineral wool, EN 771-1:2011+A1:2015 according to Annex C31

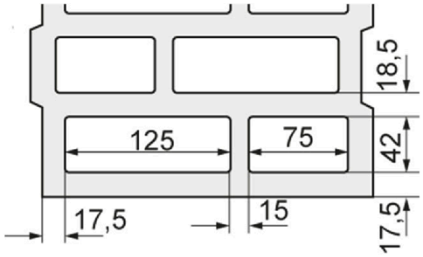

Vertical perforated brick filled with mineral wool, EN 771-1:2011+A1:2015; according to Annex C33

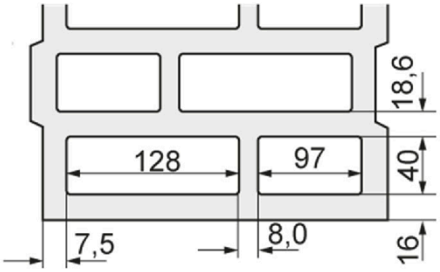

Vertical perforated brick HLz, EN 771-1:2011+A1:2015; e.g. Wienerberger according to Annex C35

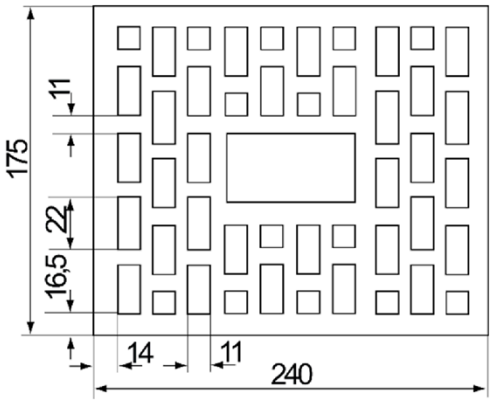

Measures in [mm]
Figures not to scale

Upat injection system UPM 33 for masonry

Intended Use
Overview dimensions of perforated and hollow bricks part 2

Annex B12

Table B13.1: Overview dimensions of perforated and hollow bricks part 3

Horizontal perforated brick LLz,
EN 771-1:2011+A1:2015; according to Annex C37

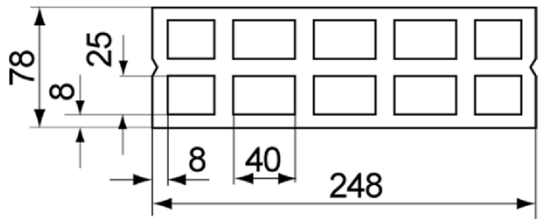

Light-weight concrete hollow block Hbl,
EN 771-3:2011+A1:2015; according to Annex C39

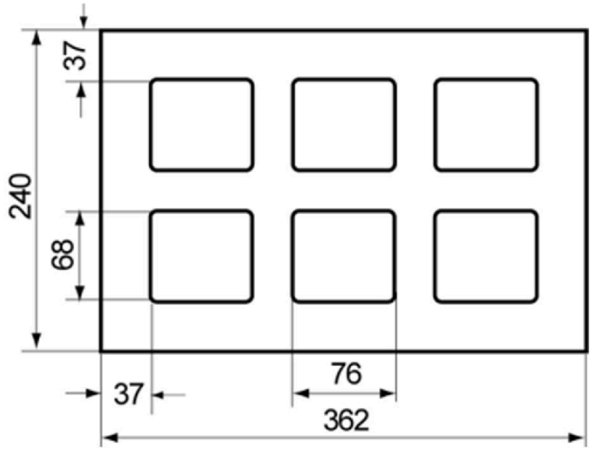

Measures in [mm]
Figures not to scale

Upat injection system UPM 33 for masonry

Intended Use
Overview dimensions of perforated and hollow bricks part 3

Annex B13

Spacing and edge distance part 1

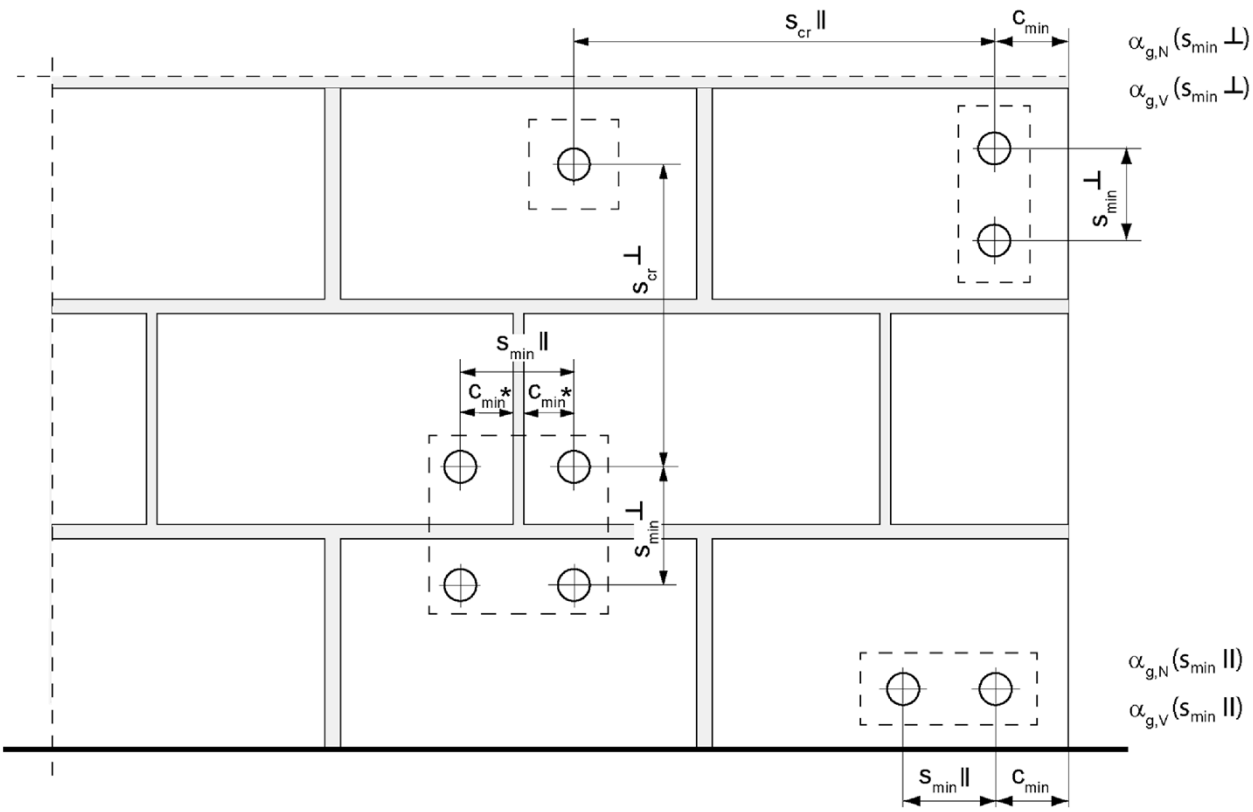

* Only, if vertical joints are not completely filled with mortar

s_{min} ∥	=	Minimum spacing parallel to horizontal joint
s_{min} ⊥	=	Minimum spacing perpendicular to horizontal joint
s_{cr} ∥	=	Characteristic spacing parallel to horizontal joint
s_{cr} ⊥	=	Characteristic spacing perpendicular to horizontal joint
$c_{cr} = c_{min}$	=	Edge distance
$\alpha_{g,N}$ (s_{min} ∥)	=	Group factor for tension load, anchor group parallel to horizontal joint
$\alpha_{g,V}$ (s_{min} ∥)	=	Group factor for shear load, anchor group parallel to horizontal joint
$\alpha_{g,N}$ (s_{min} ⊥)	=	Group factor for tension load, anchor group perpendicular to horizontal joint
$\alpha_{g,V}$ (s_{min} ⊥)	=	Group factor for shear load, anchor group perpendicular to horizontal joint

Figures not to scale

Upat injection system UPM 33 for masonry	**Annex B14**
Intended Use Spacing and edge distance part 1	

Spacing and edge distance part 2

For $s \geq s_{cr}$: $\alpha_g = 2$

For $s_{min} \leq s < s_{cr}$: α_g according to installation parameters of brick Annex C

Group of 2 anchors

$N^g_{Rk} = \alpha_{g,N} \cdot N_{Rk}$; $V^g_{Rk,b} = V^g_{Rk,c,II} = V^g_{Rk,c,\perp} = \alpha_{g,V} \cdot V_{Rk}$

Group of 4 anchors

$N^g_{Rk} = \alpha_{g,N}\ (s_{min}II) \cdot \alpha_{g,N}\ (s_{min}\perp) \cdot N_{Rk}$;

$V^g_{Rk,b} = V^g_{Rk,c,II} = V^g_{Rk,c,\perp} = \alpha_{g,V}\ (s_{min}II) \cdot \alpha_{g,V}\ (s_{min}\perp) \cdot V_{Rk}$

with N_{Rk} and $\alpha_{g,N}$ depending on $s_{min}II$ or $s_{min}\perp$ acc. to Annex C

with V_{Rk} and $\alpha_{g,V}$ depending on $s_{min}II$ or $s_{min}\perp$ acc. to Annex C

Upat injection system UPM 33 for masonry	**Annex B15**
Intended Use Spacing and edge distance part 2	

Table C1.1: Characteristic resistance to **steel failure** under **tension loading** of **Upat anchor rods** and **standard threaded rods**

Anchor rod / standard threaded rod				**M6**	**M8**[3]	**M10**[3]	**M12**	**M16**
Characteristic resistance to steel failure under tension loading								
Characteristic resistance $N_{Rk,s}$	Steel zinc plated	Property class	4.6	[kN]	8,0	14,6(13,2)	23,2(21,4)	33,7	62,8
			4.8		8,0	14,6(13,2)	23,2(21,4)	33,7	62,8
			5.8		10,0	18,3(16,6)	29,0(26,8)	42,1	78,5
			8.8		16,0	29,2(26,5)	46,4(42,8)	67,4	125,6
	Stainless steel R and High corrosion resistant steel HCR		50		10,0	18,3	29,0	42,1	78,5
			70		14,0	25,6	40,6	59,0	109,9
			80		16,0	29,2	46,4	67,4	125,6
Partial factors [1]								
Partial factors $\gamma_{Ms,N}$	Steel zinc plated	Property class	4.6	[-]	2,00			
			4.8		1,50			
			5.8		1,50			
			8.8		1,50			
	Stainless steel R and High corrosion resistant steel HCR		50		2,86			
			70		1,50[2] / 1,87			
			80		1,60			

[1] In absence of other national regulations

[2] Only for Upat UPM A made of high corrosion resistant steel HCR

[3] Values in brackets are valid for undersized threaded rods with smaller stress area A_s for hot-dip galvanised standard threaded rods according to EN ISO 10684:2004+AC:2009.

Upat injection system UPM 33 for masonry

Performance
Characteristic resistance to steel failure under tension loading of Upat anchor rods and standard threaded rods

Annex C1

Table C2.1: Characteristic resistance to **steel failure** under **shear loading** of **Upat anchor rods** and **standard threaded rods**

Anchor rod / standard threaded rod				**M6**	**M8[3)]**	**M10[3)]**	**M12**	**M16**
Characteristic resistance to steel failure under shear loading								
without lever arm								
Characteristic resistance $V_{Rk,s}$	Steel zinc plated	Property class	4.6	[kN]	4,8	8,7(7,9)	13,9(12,8)	20,2	37,6
			4.8		4,8	8,7(7,9)	13,9(12,8)	20,2	37,6
			5.8		6,0	10,9(9,9)	17,4(16,0)	25,2	47,1
			8.8		8,0	14,6(13,2)	23,2(21,4)	33,7	62,8
	Stainless steel R and High corrosion resistant steel HCR		50		5,0	9,1	14,5	21,0	39,2
			70		7,0	12,8	20,3	29,5	54,9
			80		8,0	14,6	23,2	33,7	62,8
with lever arm								
Characteristic resistance $M^0_{Rk,s}$	Steel zinc plated	Property class	4.6	[Nm]	6,1	14,9(12,9)	29,9(26,5)	52,3	132,9
			4.8		6,1	14,9(12,9)	29,9(26,5)	52,3	132,9
			5.8		7,6	18,7(16,1)	37,3(33,2)	65,4	166,2
			8.8		12,2	29,9(25,9)	59,8(53,1)	104,6	265,9
	Stainless steel R and High corrosion resistant steel HCR		50		7,6	18,7	37,3	65,4	166,2
			70		10,6	26,2	52,3	91,5	232,6
			80		12,2	29,9	59,8	104,6	265,9
Partial factors[1)]								
Partial factors $\gamma_{Ms,V}$	Steel zinc plated	Property class	4.6	[-]	1,67				
			4.8		1,25				
			5.8		1,25				
			8.8		1,25				
	Stainless steel R and High corrosion resistant steel HCR		50		2,38				
			70		1,25[2)] / 1,56				
			80		1,33				

[1)] In absence of other national regulations

[2)] Only for Upat UPM A made of high corrosion resistant steel HCR

[3)] Values in brackets are valid for undersized threaded rods with smaller stress area A_s for hot-dip galvanised standard threaded rods (M8 resp. M10) according to EN ISO 10684:2004+AC:2009.

Upat injection system UPM 33 for masonry

Performance
Characteristic resistance to steel failure under shear loading of Upat anchor rods and standard threaded rods

Annex C2

Table C3.1: Characteristic resistance to **steel failure** under **tension / shear loading** of **internal threaded anchors UPM-I**

Upat internal threaded anchor UPM-I					**M6**	**M8**	**M10**	**M12**
Characteristic resistance to steel failure under tension loading, decisive values of internal threaded anchor UPM-I with screw/threaded rod								
Characteristic resistance	$N_{Rk,s}$	Property class	4.6	[kN]	8,0	14,6	23,2	33,7
		Property class	5.8		10,0	18,3	29,0	42,1
		Property class 70	R		14,0	25,6	40,6	59,0
			HCR		14,0	25,6	40,6	59,0
Partial factors[1]								
Partial factors	$\gamma_{Ms,N}$	Property class	4.6	[-]	2,00			
		Property class	5.8		1,50			
		Property class 70	R		1,87			
			HCR		1,87			
Characteristic resistance to steel failure under shear loading; decisive values of internal threaded anchor UPM-I with screw/threaded rod								
without lever arm								
Characteristic resistance	$V_{Rk,s}$	Property class	4.6	[kN]	4,8	8,7	13,9	20,2
		Property class	5.8		6,0	10,9	15,0	21,0
		Property class 70	R		7,0	12,8	20,3	29,5
			HCR		7,0	12,8	20,3	29,5
with lever arm								
Characteristic resistance	$M^0_{Rk,s}$	Property class	4.6	[Nm]	6,1	14,9	29,9	52,3
		Property class	5.8		7,6	18,7	37,3	65,4
		Property class 70	R		10,6	26,2	52,3	91,5
			HCR		10,6	26,2	52,3	91,5
Partial factors[1]								
Partial factors	$\gamma_{Ms,V}$	Property class	4.6	[-]	1,67			
		Property class	5.8		1,25			
		Property class 70	R		1,56			
			HCR		1,56			

[1] In absence of other national regulations

Upat injection system UPM 33 for masonry

Performance
Characteristic resistance to steel failure under tension / shear loading of internal threaded anchors UPM-I

Annex C3

Solid brick Mz, NF, EN 771-1:2011+A1:2015

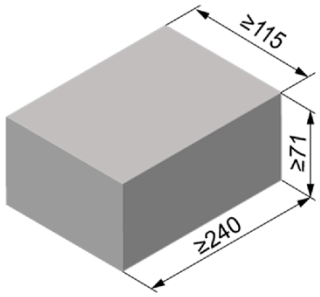

Producer		e.g. Wienerberger		
Nominal dimensions	[mm]	length L	width W	height H
		≥ 240	≥ 115	≥ 71
Mean gross dry density ρ	[kg/dm³]	≥ 1,8		
Mean compressive strength / Min. compressive strength single brick [1]	[N/mm²]	15 / 12 or 25 / 20 or 35 / 28		
Standard or annex		EN 771-1:2011+A1:2015		

Table C4.1: Installation parameters for edge distance c=100mm

Anchor rod			**M6**	**M8**	**M10**	**M12**	**-**		**-**	
Internal threaded anchor UPM-I			**-**	**-**	**-**	**-**	**M6**	**M8**	**M10**	**M12**
							11x85		**15x85**	
Anchor rod and internal threaded anchor UPM-I without perforated sleeve										
Effective anchorage depth	h_{ef}	[mm]	50	50	50	50	85			
			80	80	80	80				
			200	200	200	200				
Max. installation torque	max T_{inst}	[Nm]	4	10			4	10		
General installation parameters										
Edge distance	$c_{min} = c_{cr}$	[mm]	100				100			
Edge distance h_{ef}=200	$c_{min} = c_{cr}$		150				-[2]			
Spacing	s_{min} II,N		60				60			
	h_{ef}=200 s_{min} II,N		240				-[2]			
	s_{min} II,V		240				240			
	s_{cr} II		240				240			
	s_{cr} ⊥ = s_{min} ⊥		75				75			
Drilling method										
Hammer drilling with hard metal hammer drill										

[1] The minimum compressive strength of the single brick must not be less than 80% of the mean compressive strength.
[2] No performance assessed

Table C4.2: Group factors

Anchor rods			**M6**	**M8**	**M10**	**M12**	**-**		**-**	
Internal threaded anchor UPM-I			**-**	**-**	**-**	**-**	**M6**	**M8**	**M10**	**M12**
							11x85		**15x85**	
Edge distance	c_{min}	[mm]	**100**							
Group factor	$\alpha_{g,N}$ (s_{min} II)	[-]	1,5							
	$\alpha_{g,V}$ (s_{min} II)		2,0							
	h_{ef}=200 $\alpha_{g,N}$ (s_{min} II)		1,5							
	h_{ef}=200 $\alpha_{g,V}$ (s_{min} II)		2,0							
	$\alpha_{g,N}$ (s_{min} ⊥)		2,0							
	$\alpha_{g,V}$ (s_{min} ⊥)		2,0							
	h_{ef}=200 $\alpha_{g,N}$ (s_{min} ⊥)		2,0							
	h_{ef}=200 $\alpha_{g,V}$ (s_{min} ⊥)		2,0							

Upat injection system UPM 33 for masonry

Performance
Solid brick Mz, NF, dimensions, installation parameters for edge distance c=100mm, Group factors

Annex C4

Solid brick Mz, NF, EN 771-1:211+A1:2015

Table C5.1: Characteristic resistance to pull-out failure or brick breakout failure of a single anchor under tension loading for edge distance c=100mm

Anchor rod		**M6**	**M8**	**M10**		**M12**				**-**		**-**	
Internal threaded anchor UPM-I		**-**	**-**	**-**			**-**			**M6**	**M8**	**M10**	**M12**
										11x85		**15x85**	
$N_{Rk} = N_{Rk,p} = N_{Rk,b} = N_{Rk,p,c} = N_{Rk,b,c}$ [kN]; temperature range 50/80°C [2)]													
Mean compressive strength / Min. compressive strength single brick [1)]	Use con-ditions	Effective anchorage depth h_{ef} [mm]											
		≥50	≥50	50	80	200	50	80	200	85			
15 / 12 N/mm²	w/w w/d	2,5	2,5	2,0	3,0	7,5	2,0	3,5	5,0	3,5			
	d/d	4,0	4,0	3,5	5,0	12,0	3,0	5,5	8,0	5,5			
25 / 20 N/mm²	w/w w/d	3,5	3,5	3,0	4,5	11,0	3,0	5,0	7,0	5,0			
	d/d	5,5	5,5	5,0	7,0	12,0	4,5	8,0	11,5	8,0			

[1)] The minimum compressive strength of the single brick must not be less than 80% of the mean compressive strength.
[2)] For temperature range 72/120°C: $N_{Rk\,(72/120°C)} = 0{,}83 \cdot N_{Rk\,(50/80°C)}$.

Table C5.2: Characteristic resistance to local brick failure or brick edge failure of a single anchor under shear loading for edge distance c=100mm

Anchor rod		**M6**	**M8**	**M10**		**M12**			**-**		**-**	
Internal threaded anchor UPM-I		**-**	**-**	**-**			**-**		**M6**	**M8**	**M10**	**M12**
									11x85		**15x85**	
$V_{Rk} = V_{Rk,b} = V_{Rk,c,II} = V_{Rk,c,\perp}$ [kN]; temperature range 50/80°C and 72/120°C												
Mean compressive strength / Min. compressive strength single brick [1)]	Use con-ditions	Effective anchorage depth h_{ef} [mm]										
		≥50	≥50	≥50	200	≥50	200	85				
15 / 12 N/mm²	w/w w/d d/d	2,5	2,5	4,0	8,5	4,0	11,5	2,5				
25 / 20 N/mm²	w/w w/d d/d	4,0	4,0	6,0	12,0	5,5	12,0	4,0				

[1)] The minimum compressive strength of the single brick must not be less than 80% of the mean compressive strength.

Factor for job site tests and displacements see annex C44.

Upat injection system UPM 33 for masonry	**Annex C5**
Performance Solid brick Mz, NF, Characteristic resistance under tension and shear loading, edge distance c=100mm	

Solid brick Mz, NF, EN 771-1:2011+A1:2015

Table C6.1: Installation parameters for edge distance c=60mm

Anchor rod			**M6**	**M8**	**M10**	**M12**	**M16**	**-**		**-**	
Internal threaded anchor UPM-I			-	-	-	-	-	**M6**	**M8**	**M10**	**M12**
								11x85		**15x85**	
Anchor rod and internal threaded anchor UPM-I without perforated sleeve											
Effective anchorage depth	h_{ef}	[mm]	50	50	50	50	50	85			
			100	100	100	100	100				
			200	200	200	200	200				
Max. installation torque	max T_{inst}	[Nm]	4	10				4	10		
General installation parameters											
Edge distance	$c_{min} = c_{cr}$	[mm]	60								
Edge distance h_{ef}=200	c_{min}	[mm]	60								
Spacing	s_{min} II,N	[mm]	80								
	h_{ef}=200 s_{min} II,N	[mm]	80								
	s_{min} II,V	[mm]	80								
	s_{cr} II	[mm]	3x h_{ef}								
	s_{min} ⊥	[mm]	80								
	s_{cr} ⊥	[mm]	3x h_{ef}								
Drilling method											
Hammer drilling with hard metal hammer drill											

Table C6.2: Group factors

Anchor rods			**M6**	**M8**	**M10**	**M12**	**M16**	**-**		**-**	
Internal threaded anchor UPM-I			-	-	-	-	-	**M6**	**M8**	**M10**	**M12**
								11x85		**15x85**	
Edge distance	c_{min}	[mm]	60								
Group factor	$\alpha_{g,N}$ (s_{min} II)	[-]	0,6								
	$\alpha_{g,V}$ (s_{min} II)	[-]	1,3								
	h_{ef}=200 $\alpha_{g,N}$ (s_{min} II)	[-]	1,4								
	h_{ef}=200 $\alpha_{g,V}$ (s_{min} II)	[-]	1,5								
	$\alpha_{g,N}$ (s_{min} ⊥)	[-]	0,3								
	$\alpha_{g,V}$ (s_{min} ⊥)	[-]	1,3								
	h_{ef}=200 $\alpha_{g,N}$ (s_{min} ⊥)	[-]	2,0								
	h_{ef}=200 $\alpha_{g,V}$ (s_{min} ⊥)	[-]	1,1								

Upat injection system UPM 33 for masonry

Performance
Solid brick Mz, NF, dimensions, installation parameters, edge distance c=60mm, Group factors

Annex C6

Solid brick Mz, NF, EN 771-1:2011+A1:2015

Table C7.1: Characteristic resistance to pull-out failure or brick breakout failure of a single anchor under tension loading for edge distance c=60mm

Anchor rod		**M6**	**M8**	**M10**	**M12**	**M16**	**-**		**-**	
Internal threaded anchor UPM-I		-	-	-	-	-	**M6**	**M8**	**M10**	**M12**
							11x85		**15x85**	
$N_{Rk} = N_{Rk,p} = N_{Rk,b} = N_{Rk,p,c} = N_{Rk,b,c}$ [kN]; temperature range 50/80°C [3)]										
Mean compressive strength / Min. compressive strength single brick [1)]	Use conditions	Effective anchorage depth h_{ef} [mm]													
		50	100	50	100	50	100	200	50	100	200	50	100	200	85
15 / 12 N/mm²	w/w w/d	1,5		2,0	2,0	2,0	2,5	-[2)]	2,0	2,5	-[2)]	2,0	5,5	-[2)]	-[2)]
	d/d	2,5		3,0	4,0	3,0	4,0	9,5	3,0	4,0	9,5	3,0	8,5	9,5	-[2)]
25 / 20 N/mm²	w/w w/d	2,0		2,5	3,0	2,5	3,5	-[2)]	3,0	3,5	-[2)]	3,0	7,5	-[2)]	-[2)]
	d/d	3,5		4,5	5,5	4,5	5,5	12	4,5	5,5	12	4,5	12	12	-[2)]
35 / 28 N/mm²	w/w w/d	2,5		3,0	4,0	3,0	4,0	-[2)]	3,5	4,0	-[2)]	3,5	9,0	-[2)]	-[2)]
	d/d	4,0		5,5	6,5	5,5	6,5	12	5,5	6,5	12	5,5	12	12	-[2)]

[1)] The minimum compressive strength of the single brick must not be less than 80% of the mean compressive strength.
[2)] No performance assessed.
[3)] For temperature range 72/120°C: $N_{Rk\,(72/120°C)} = 0{,}83 \cdot N_{Rk\,(50/80°C)}$.

Table C7.2: Characteristic resistance to local brick failure or brick edge failure of a single anchor under shear loading for edge distance c=60mm

Anchor rod		**M6**	**M8**	**M10**	**M12**	**M16**	**-**		**-**	
Internal threaded anchor UPM-I		-	-	-	-	-	**M6**	**M8**	**M10**	**M12**
							11x85		**15x85**	
$V_{Rk} = V_{Rk,b} = V_{Rk,c,II} = V_{Rk,c,\perp}$ [kN]; temperature range 50/80°C and 72/120°C										
Mean compressive strength / Min. compressive strength single brick [1)]	Use conditions	Effective anchorage depth h_{ef} [mm]													
		50	100	50	100	50	100	200	50	100	200	50	100	200	85
15 / 12 N/mm²	w/w w/d d/d	1,2	2,5	1,2	3,0	2,0	3,0	1,5	1,5	3,0	3,0	0,6	3,0	4,5	-[2)]
25 / 20 N/mm²		1,5	3,5	1,5	4,5	3,0	4,5	2,5	2,0	4,5	4,5	0,9	4,5	6,0	-[2)]
35 / 28 N/mm²		2,0	4,0	2,0	5,0	3,5	5,0	3,0	2,5	5,0	5,0	1,2	5,0	7,5	-[2)]

[1)] The minimum compressive strength of the single brick must not be less than 80% of the mean compressive strength.
[2)] No performance assessed.

Factor for job site tests and displacements see annex C44.

Upat injection system UPM 33 for masonry	**Annex C7**
Performance Solid brick Mz, NF, Characteristic resistance under tension and shear loading, edge distance c=60mm	

Solid brick Mz, 2DF, EN 771-1:2011+A1:2015

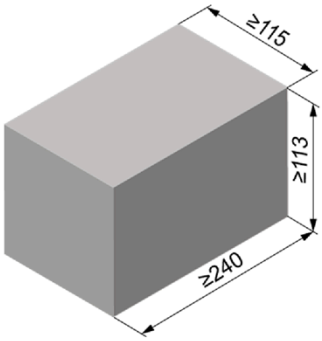

Producer		e.g. Wienerberger		
Nominal dimensions	[mm]	length L	width W	height H
		≥ 240	≥ 115	≥ 113
Mean gross dry density ρ	[kg/dm³]	≥ 1,8		
Mean compressive strength / Min. compressive strength single brick [1]	[N/mm²]	12,5 / 10 or 20 / 16		
Standard or annex		EN 771-1:2011+A1:2015		

Table C8.1: Installation parameters

Anchor rod			**M6**		**M8**		**M10**		**M12**		**M16**		**-**		**-**	
Internal threaded anchor UPM-I			**-**		**-**		**-**		**-**		**-**		**M6**	**M8**	**M10**	**M12**
													11x85		**15x85**	
Anchor rod and internal threaded anchor UPM-I without perforated sleeve																
Effective anchorage depth	h_{ef}	[mm]	50	100	50	100	50	100	50	100	50	100	85			
Max. installation torque	max T_{inst}	[Nm]	4		10								4	10		
Anchor rod and internal threaded anchor UPM-I with perforated sleeve UPM SH 16x85 K																
Effective anchorage depth	h_{ef}	[mm]	-[2]		85				-[2]				85		-[2]	
Max. installation torque	max T_{inst}	[Nm]			10								4	10		

General installation parameters			
Edge distance	$c_{min} = c_{cr}$	[mm]	60
Spacing	s_{min} ∥		120
	s_{cr} ∥		240
	s_{cr} ⊥ = s_{min} ⊥		115
Drilling method			
Hammer drilling with hard metal hammer drill			

[1] The minimum compressive strength of the single brick must not be less than 80% of the mean compressive strength.
[2] No performance assessed.

Table C8.2: Group factors

Anchor rods			**M6**		**M8**		**M10**		**M12**		**M16**		**-**		**-**	
Internal threaded anchor UPM-I			**-**		**-**		**-**		**-**		**-**		**M6**	**M8**	**M10**	**M12**
													11x85		**15x85**	
Group factor	$\alpha_{g,N}$ (s_{min} ∥)	[-]	1,5													
	$\alpha_{g,V}$ (s_{min} ∥)		1,4													
	$\alpha_{g,N}$ (s_{min} ⊥)		2,0													
	$\alpha_{g,V}$ (s_{min} ⊥)															

Upat injection system UPM 33 for masonry

Performance
Solid brick Mz, 2DF, dimensions, installation parameters, Group factors

Annex C8

Solid brick Mz, 2DF, EN 771-1:2011+A1:2015

Table C9.1: Characteristic resistance to pull-out failure or brick breakout failure of a single anchor under tension loading

Anchor rod	**M6**	**M8**	**M10**	**M12**	**M16**	**-**		**-**		**M8**	**M10**	**-**	
Internal threaded anchor UPM-I	-	-	-	-	-	**M6**	**M8**	**M10**	**M12**	-	-	**M6**	**M8**
						11x85		**15x85**				**11x85**	
Perforated sleeve UPM SH K	-	-	-	-	-	-		-		**16x85**			

$N_{Rk} = N_{Rk,p} = N_{Rk,b} = N_{Rk,p,c} = N_{Rk,b,c}$ [kN]; temperature range 50/80°C [2)]

Mean compressive strength / Min. compressive strength single brick [1)]	Use conditions		Effective anchorage depth h_{ef} [mm]											
			50	100	50	100	50	100	50	100	50	100	85	
12,5 / 10 N/mm²	w/w	w/d	1,5	2,5	1,5	2,5	1,5	3,0	2,0	3,5	2,0	3,5	2,0	1,5
	d/d		3,0	4,0	3,0	4,0	3,0	4,5	3,0	5,5	3,0	5,5	3,0	3,0
20 / 16 N/mm²	w/w	w/d	2,5	4,0	2,5	4,0	2,5	4,5	3,5	5,5	3,5	5,5	3,5	2,5
	d/d		4,5	7,0	4,5	7,0	4,5	7,5	5,5	8,0	5,5	8,0	5,5	4,5

[1)] The minimum compressive strength of the single brick must not be less than 80% of the mean compressive strength.
[2)] For temperature range 72/120°C: $N_{Rk\,(72/120°C)} = 0{,}83 \cdot N_{Rk\,(50/80°C)}$.

Table C9.2: Characteristic resistance to local brick failure or brick edge failure of a single anchor under shear loading

Anchor rod	**M6**	**M8**	**M10**	**M12**	**M16**	**-**		**-**		**M8**	**M10**	**-**	
Internal threaded anchor UPM-I	-	-	-	-	-	**M6**	**M8**	**M10**	**M12**	-	-	**M6**	**M8**
						11x85		**15x85**				**11x85**	
Perforated sleeve UPM SH K	-	-	-	-	-	-		-		**16x85**			

$V_{Rk} = V_{Rk,b} = V_{Rk,c,II} = V_{Rk,c,\perp}$ [kN]; temperature range 50/80°C and 72/120°C

Mean compressive strength / Min. compressive strength single brick[1)]	Use conditions		Effective anchorage depth h_{ef} [mm]												
			≥ 50					85							
12,5 / 10 N/mm²	w/w	w/d	2,5	3,0	3,0	3,5	3,0	2,5	3,0	3,0	3,0	3,0	3,5	2,5	3,0
	d/d														
20 / 16 N/mm²	w/w	w/d	4,0	5,0	5,5	5,5	5,0	4,0	5,0	5,0	5,0	5,0	6,0	4,0	5,0
	d/d														

[1)] The minimum compressive strength of the single brick must not be less than 80% of the mean compressive strength.

Factor for job site tests and displacements see annex C44.

Upat injection system UPM 33 for masonry

Performance
Solid brick Mz, 2DF, Characteristic resistance under tension and shear loading

Annex C9

Solid brick Mz, EN 771-1:2011+A1:2015

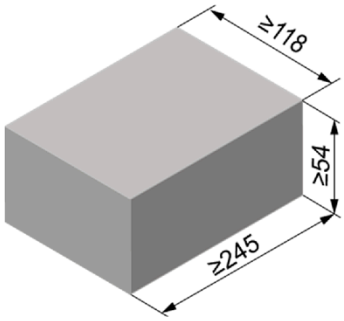

Producer		e.g. Nigra		
Nominal dimensions	[mm]	length L	width W	height H
		≥ 245	≥ 118	≥ 54
Mean gross dry density ρ	[kg/dm³]	≥ 1,8		
Mean compressive strength / Min. compressive strength single brick [1)]	[N/mm²]	12,5 / 10 or 25 / 20		
Standard or annex		EN 771-1:2011+A1:2015		

Table C10.1: Installation parameters

Anchor rod			**M6**		**M8**		**M10**		**M12**		**M16**		**-**		**-**	
Internal threaded anchor UPM-I			**-**		**-**		**-**		**-**		**-**		**M6**	**M8**	**M10**	**M12**
													11x85		**15x85**	
Anchor rod and internal threaded anchor UPM-I without perforated sleeve																
Effective anchorage depth	h_{ef}	[mm]	50	100	50	100	50	100	50	100	50	100	85			
Max. installation torque	max T_{inst}	[Nm]	4		10								4	10		
General installation parameters																
Edge distance	$c_{min} = c_{cr}$	[mm]	60													
Spacing	s_{cr} ∥ = s_{min} ∥	[mm]	245													
	s_{cr} ⊥ = s_{min} ⊥	[mm]	60													
Drilling method																
Hammer drilling with hard metal hammer drill																

[1)] The minimum compressive strength of the single brick must not be less than 80% of the mean compressive strength.

Table C10.2: Group factors

Anchor rods			**M6**	**M8**	**M10**	**M12**	**M16**	**-**		**-**	
Internal threaded anchor UPM-I			**-**	**-**	**-**	**-**	**-**	**M6**	**M8**	**M10**	**M12**
								11x85		**15x85**	
Group factor	$\alpha_{g,N}$ (s_{min} ∥)	[-]	2								
	$\alpha_{g,V}$ (s_{min} ∥)	[-]	2								
	$\alpha_{g,N}$ (s_{min} ⊥)	[-]	2								
	$\alpha_{g,V}$ (s_{min} ⊥)	[-]	2								

Upat injection system UPM 33 for masonry

Performance
Solid brick Mz, dimensions, installation parameters, Group factors

Annex C10

Solid brick Mz, EN 771-1:2011+A1:2015

Table C11.1: Characteristic resistance to pull-out failure or brick breakout failure of a single anchor under tension loading

Anchor rod			**M6**	**M8**	**M10**	**M12**	**M16**	**-**		**-**	
Internal threaded anchor UPM-I			**-**	**-**	**-**	**-**	**-**	**M6**	**M8**	**M10**	**M12**
								11x85		**15x85**	
$N_{Rk} = N_{Rk,p} = N_{Rk,b} = N_{Rk,p,c} = N_{Rk,b,c}$ [kN]; temperature range 50/80°C [2)]											
Mean compressive strength/ Min. compressive strength single brick [1)]	Use con-ditions		Effective anchorage depth h_{ef} [mm]								
			≥ 50					85			
12,5 / 10 N/mm²	w/w	w/d	0,60	0,90	0,75	0,75	0,75	0,60	0,75		
	d/d		1,20	1,50	1,20	1,20	1,20	1,20	1,20		
25 / 20 N/mm²	w/w	w/d	0,90	1,50	1,20	1,20	1,20	0,90	1,20		
	d/d		1,50	2,50	2,00	2,00	2,00	1,50	2,00		

[1)] The minimum compressive strength of the single brick must not be less than 80% of the mean compressive strength.
[2)] For temperature range 72/120°C: $N_{Rk\,(72/120°C)} = 0{,}83 \cdot N_{Rk\,(50/80°C)}$.

Table C11.2: Characteristic resistance to local brick failure or brick edge failure of a single anchor under shear loading

Anchor rod			**M6**	**M8**	**M10**	**M12**	**M16**	**-**		**-**	
Internal threaded anchor UPM-I			**-**	**-**	**-**	**-**	**-**	**M6**	**M8**	**M10**	**M12**
								11x85		**15x85**	
$V_{Rk} = V_{Rk,b} = V_{Rk,c,II} = V_{Rk,c,\perp}$ [kN]; temperature range 50/80°C and 72/120°C											
Mean compressive strength / Min. compressive strength single brick [1)]	Use con-ditions		Effective anchorage depth h_{ef} [mm]								
			≥ 50					85			
12,5 / 10 N/mm²	w/w	w/d	2,0	3,0	4,0	4,5	5,5	2,0	3,0	4,0	4,5
	d/d										
25 / 20 N/mm²	w/w	w/d	2,5	4,0	5,5	6,0	8,0	2,5	4,0	5,5	6,0
	d/d										

[1)] The minimum compressive strength of the single brick must not be less than 80% of the mean compressive strength.

Factor for job site tests and displacements see annex C44.

Upat injection system UPM 33 for masonry	**Annex C11**
Performance Solid brick Mz, Characteristic resistance under tension and shear loading	

Solid calcium silicate brick KS, NF, EN 771-2:2011+A1:2015

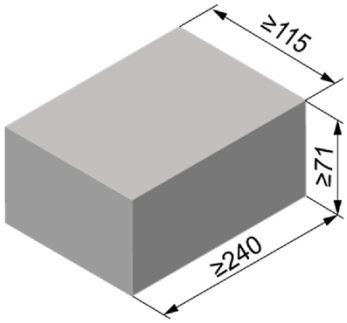

Producer		-		
Nominal dimensions	[mm]	length L	width W	height H
		≥ 240	≥ 115	≥ 71
Mean gross dry density ρ	[kg/dm³]	≥ 1,8		
Mean compressive strength / Min. compressive strength single brick [1)]	[N/mm²]	15 / 12 or 25 / 20 or 35 / 28		
Standard or annex		EN 771-2:2011+A1:2015		

Table C12.1: Installation parameters

Anchor rod			**M6**		**M8**		**M10**		**M12**		**M16**		**-**		**-**	
Internal threaded anchor UPM-I			**-**		**-**		**-**		**-**		**-**		**M6**	**M8**	**M10**	**M12**
													11x85		**15x85**	
Anchor rod and internal threaded anchor UPM-I without perforated sleeve																
Effective anchorage depth	h_{ef}	[mm]	50	100	50	100	50	100	50	100	50	100	85		85	
							200		200		200					
Max. installation torque	max T_{inst}	[Nm]	3		5		15		15		25		3	5	15	
General installation parameters																
Edge distance	$c_{min} = c_{cr}$	[mm]	60													
Spacing	s_{min} ∥	[mm]	80													
	s_{cr} ∥	[mm]	80													
	s_{min} ⊥	[mm]	3x h_{ef}													
	s_{cr} ⊥	[mm]	3x h_{ef}													
Drilling method																
Hammer drilling with hard metal hammer drill																

[1)] The minimum compressive strength of the single brick must not be less than 80% of the mean compressive strength..

Table C12.2: Group factors

Anchor rod			**M6**		**M8**		**M10**		**M12**		**M16**		**-**		**-**	
Internal threaded anchor UPM-I			**-**		**-**		**-**		**-**		**-**		**M6**	**M8**	**M10**	**M12**
													11x85		**15x85**	
Group factor	$\alpha_{g,N}$ (s_{min} ∥)	[-]	0,7													
	$\alpha_{g,V}$ (s_{min} ∥)	[-]	1,3													
	$\alpha_{g,N}$ (s_{min} ⊥)	[-]	2,0													
	$\alpha_{g,V}$ (s_{min} ⊥)	[-]	2,0													

Upat injection system UPM 33 for masonry

Performance
Solid calcium silicate brick KS, NF, dimensions, installation parameters, Group factors

Annex C12

Solid calcium silicate brick KS, NF, EN 771-2:2011+A1:2015

Table C13.1: Characteristic resistance to pull-out failure or brick breakout failure of a single anchor under tension loading

Anchor rod		**M6**	**M8**	**M10**	**M12**	**M16**	**-**		**-**	
Internal threaded anchor UPM-I		-	-	-	-	-	**M6**	**M8**	**M10**	**M12**
							11x85		**15x85**	
$N_{Rk} = N_{Rk,p} = N_{Rk,b} = N_{Rk,p,c} = N_{Rk,b,c}$ [kN]; temperature range 50/80°C [2)]										
Mean compressive strength / Min. compressive strength single brick [1)]	Use con-ditions	Effective anchorage depth h_{ef} [mm]														
		50	100	50	100	50	100	200	50	100	200	50	100	200	85	85
15 / 12 N/mm²	w/w w/d	2,0	3,0	2,5	4,5	2,5	3,5	7,0	2,5	3,0	6,5	2,5	3,5	8,0	2,5	2,5
	d/d	4,0	5,5	4,0	8,0	4,0	5,5	12	4,0	4,5	12	4,5	5,5	12	4,0	4,0
25 / 20 N/mm²	w/w w/d	3,0	4,5	3,5	6,5	3,5	4,5	10	3,5	4,0	9,5	4,0	5,0	11	3,5	3,5
	d/d	5,5	7,5	6,0	11	6,0	8,0	12	6,0	6,5	12	6,5	8,0	12	6,0	6,0
35 / 28 N/mm²	w/w w/d	3,5	5,0	4,0	8,0	4,5	5,5	12	4,5	5,0	11	4,5	5,5	12	4,5	4,5
	d/d	6,5	9,0	7,0	12	7,0	9,0	12	7,0	7,5	12	7,5	9,5	12	7,0	7,0

[1)] The minimum compressive strength of the single brick must not be less than 80% of the mean compressive strength.
[2)] For temperature range 72/120°C: $N_{Rk\,(72/120°C)} = 0{,}83 \cdot N_{Rk\,(50/80°C)}$.

Table C13.2: Characteristic resistance to local brick failure or brick edge failure of a single anchor under shear loading

Anchor rod		**M6**	**M8**	**M10**	**M12**	**M16**	**-**		**-**	
Internal threaded anchor UPM-I		-	-	-	-	-	**M6**	**M8**	**M10**	**M12**
							11x85		**15x85**	
$V_{Rk} = V_{Rk,b} = V_{Rk,c,II} = V_{Rk,c,\perp}$ [kN]; temperature range 50/80°C and 72/120°C										
Mean compressive strength / Min. compressive strength single brick [1)]	Use con-ditions	Effective anchorage depth h_{ef} [mm]											
		50	100	50	100	50	≥100	50	≥100	50	≥100	85	85
15 / 12 N/mm²	w/w w/d d/d	1,5	3,0	1,5	3,0	1,2	2,0	1,2	2,0	1,2	2,0	1,2	1,2
25 / 20 N/mm²	w/w w/d d/d	2,5	4,0	2,5	4,0	1,5	3,0	1,5	3,0	1,5	3,0	1,5	1,5
35 / 28 N/mm²	w/w w/d d/d	3,0	4,5	3,0	4,5	1,5	3,5	1,5	3,5	1,5	3,5	1,5	1,5

[1)] The minimum compressive strength of the single brick must not be less than 80% of the mean compressive strength.

Factor for job site tests and displacements see annex C44.

Upat injection system UPM 33 for masonry

Performance
Solid calcium silicate brick KS, NF, Characteristic resistance under tension and shear loading

Annex C13

Solid calcium silicate brick KS, EN 771-2:2011+A1:2015

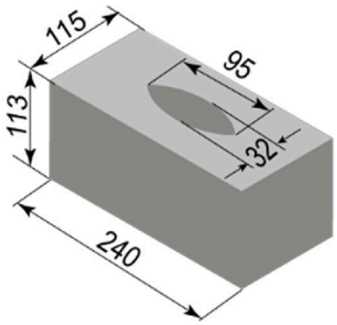

Producer		-		
Nominal dimensions	[mm]	length L	width W	height H
		≥ 240	≥ 115	≥ 113
Mean gross dry density ρ	[kg/dm³]	1,8		
Mean compressive strength / Min. compressive strength single brick [1)]	[N/mm²]	12,5 / 10 or 25 / 20		
Standard or annex		EN 771-2:2011+A1:2015		

Table C14.1: Installation parameters
(installation with perforated sleeve UPM SH K)

Anchor rod	**M6**	**M8**	**-**	**M8**	**M10**	**M8**	**M10**	**-**	**M12**	**M16**	**M12**	**M16**
Internal threaded anchor UPM-I	**-**		**M6** / **11x85**	**M8**	**-**	**-**		**M10** / **15x85**	**M12**	**-**	**-**	
Perforated sleeve UPM SH K	**12x85**		**16x85**			**16x130**		**20x85**			**20x130**	

Anchor rod and internal threaded anchor UPM-I with perforated sleeve UPM SH K							
Max. installation torque	max T_{inst}	[Nm]	2	4			
General installation parameters							
Edge distance	$c_{min} = c_{cr}$	[mm]	100				
Spacing	s_{min} ∥	[mm]	255	255	390	255	390
	s_{cr} ∥						
	s_{min} ⊥						
	s_{cr} ⊥						
Drilling method							
Hammer drilling with hard metal hammer drill							

[1)] The minimum compressive strength of the single brick must not be less than 80% of the mean compressive strength.

Table C14.2: Group factors

Anchor rod	**M6**	**M8**	**M8**	**M10**	**M8**	**M10**	**M12**	**M16**	**M12**	**M16**
Perforated sleeve UPM SH K	**12x85**		**16x85**		**16x130**		**20x85**		**20x130**	
Group factors $\alpha_{g,N}$ (s_{min} ∥) = $\alpha_{g,V}$ (s_{min} ∥)	[-]	2								
Group factors $\alpha_{g,N}$ (s_{min} ⊥) = $\alpha_{g,V}$ (s_{min} ⊥)	[-]	2								

Upat injection system UPM 33 for masonry

Performance
Solid calcium silicate brick KS, dimensions, installation parameters, Group factors

Annex C14

Solid calcium silicate brick, EN 771-2:2011+A1:2015

Table C15.1: Characteristic resistance to pull-out failure or brick breakout failure of a single anchor under tension loading

Anchor rod		**M6**	**M8**	**-**	**M8**	**M10**	**M8**	**M10**	**-**	**M12**	**M16**	**M12**	**M16**
Internal threaded anchor UPM-I		**-**		**M6 / M8** 11x85	**-**		**-**		**M10 / M12** 15x85	**-**		**-**	
Perforated sleeve UPM SH K		**12x85**		**16x85**			**16x130**		**20x85**			**20x130**	
$N_{Rk} = N_{Rk,p} = N_{Rk,b} = N_{Rk,p,c} = N_{Rk,b,c}$ [kN]; temperature range 50/80°C [2)]													
Mean compressive strength / Min. compressive strength single brick [1)]	Use con-ditions												
12,5 / 10 N/mm²	w/w	3,5		2,0	2,0		2,0		6,5			4,5	
	d/d	6,0		4,0	3,5		3,5		10,5			7,0	
25 / 20 N/mm²	w/w	5,0		3,0	3,0		3,0		9,5			6,0	
	d/d	8,5		5,5	5,5		5,5		12,0			10,0	

[1)] The minimum compressive strength of the single brick must not be less than 80% of the mean compressive strength.
[2)] For temperature range 72/120°C no performance assessed.

Table C15.2: Characteristic resistance to local brick failure or brick edge failure of a single anchor under shear loading

Anchor rod		**M6**	**M8**	**-**	**M8**	**M10**	**M8**	**M10**	**-**	**M12**	**M16**	**M12**	**M16**
Internal threaded anchor UPM-I		**-**		**M6 / M8** 11x85	**-**		**-**		**M10 / M12** 15x85	**-**		**-**	
Perforated sleeve UPM SH K		**12x85**		**16x85**			**16x130**		**20x85**			**20x130**	
$V_{Rk} = V_{Rk,b} = V_{Rk,c,II} = V_{Rk,c,\perp}$ [kN]; temperature range 50/80°C [2)]													
Mean compressive strength / Min. compressive strength single brick [1)]	Use con-ditions												
12,5 / 10 N/mm²	w/w	3,0		3,5									
	d/d												
25 / 20 N/mm²	w/w	4,0		5,5									
	d/d												

[1)] The minimum compressive strength of the single brick must not be less than 80% of the mean compressive strength.
[2)] For temperature range 72/120°C no performance assessed.

Factor for job site tests and displacements see annex C44.

Upat injection system UPM 33 for masonry	**Annex C15**
Performance Solid calcium silicate brick KS, Characteristic resistance under tension loading and shear loading	

Perforated calcium silicate brick KSL, 3DF, EN 771-2:2011+A1:2015

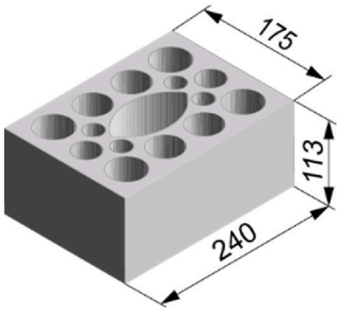

Producer		-		
Nominal dimensions	[mm]	length L	width W	height H
		240	175	113
Mean gross dry density ρ	[kg/dm³]	≥ 1,4		
Mean compressive strength / Min. compressive strength single brick [1)]	[N/mm²]	10 / 8 or 12,5 / 10 or 15 / 12 or 20 / 16 or 25 / 20		
Standard or annex		EN 771-2:2011+A1:2015		

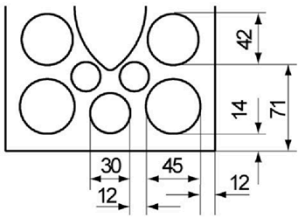

Dimension see also Annex B11

Table C16.1: Installation parameters
(installation with perforated sleeve UPM SH K)

Anchor rod	**M6**	**M8**	**M6**	**M8**	**-**	**M8**	**M10**	**M8**	**M10**	**-**	**M12**	**M16**	**M12**	**M16**
Internal threaded anchor UPM-I	-		-		**M6 M8** / **11x85**	-		-		**M10 M12** / **15x85**	-		-	
Perforated sleeve UPM SH K	**12x50**		**12x85**		**16x85**			**16x130**		**20x85**			**20x130**	
Anchor rod and internal threaded anchor UPM-I with perforated sleeve UPM SH K														
Max. installation torque	max T_{inst}	[Nm]	2											
General installation parameters														
Edge distance	$c_{min} = c_{cr}$	[mm]	60		80									
Spacing	s_{min} ∥	[mm]	100											
	s_{cr} ∥	[mm]	240											
	s_{min} ⊥	[mm]	115											
	s_{cr} ⊥	[mm]	115											
Drilling method														
Hammer drilling with hard metal hammer drill														

[1)] The minimum compressive strength of the single brick must not be less than 80% of the mean compressive strength.

Table C16.2: Group factors

Anchor rod	**M6**	**M8**	**M6**	**M8**	**-**	**M8**	**M10**	**M8**	**M10**	**-**	**M12**	**M16**	**M12**	**M16**
Internal threaded anchor UPM-I	-		-		**M6 M8** / **11x85**	-		-		**M10 M12** / **15x85**	-		-	
Perforated sleeve UPM SH K	**12x50**		**12x85**		**16x85**			**16x130**		**20x85**			**20x130**	
Group factors $\alpha_{g,N}$ (s_{min} ∥) = $\alpha_{g,V}$ (s_{min} ∥)	[-]	1,5												
Group factors $\alpha_{g,N}$ (s_{min} ⊥) = $\alpha_{g,V}$ (s_{min} ⊥)	[-]	2,0												

Upat injection system UPM 33 for masonry

Performance
Perforated calcium silicate brick KSL, 3DF, dimensions, installation parameters, Group factors

Annex C16

Perforated calcium silicate brick KSL, 3DF, EN 771-2:2011+A1:2015

Table C17.1: Characteristic resistance to pull-out failure or brick breakout failure of a single anchor under tension loading

Anchor rod		**M6**	**M8**	**M6**	**M8**	**-**	**M8**	**M10**	**M8**	**M10**	**-**	**M12**	**M16**	**M12**	**M16**
Internal threaded anchor UPM-I		**-**		**-**		**M6 M8** / **11x85**	**-**		**-**		**M10 M12** / **15x85**	**-**		**-**	
Perforated sleeve UPM SH K		**12x50**		**12x85**		**16x85**			**16x130**		**20x85**			**20x130**	
$N_{Rk} = N_{Rk,p} = N_{Rk,b} = N_{Rk,p,c} = N_{Rk,b,c}$ [kN]; temperature range 50/80°C [2)]															
Mean compressive strength/ Min. comp. strength single brick [1)]	Use con-ditions														
10 / 8 N/mm²	w/w w/d	1.5				2.0			2.0		2.0			2.0	
	d/d	1,5				2,0			2,5		2,5			2,5	
12,5 / 10 N/mm²	w/w w/d	2.0				2.0			2.5		2.5			2.5	
	d/d	2,0				2,5			3,0		3,0			3,0	
15 / 12 N/mm²	w/w w/d	2.5				2.5			3.0		3.0			3.0	
	d/d	2,5				3,0			3,5		3,5			3,5	
20 / 16 N/mm²	w/w w/d	3.0				3.5			4.5		4.5			4.5	
	d/d	3,5				4,0			4,5		4,5			4,5	
25 / 20 N/mm²	w/w w/d	4.0				4.5			5.5		5.5			5.5	
	d/d	4,5				5,0			6,0		6,0			6,0	

[1)] The minimum compressive strength of the single brick must not be less than 80% of the mean compressive strength.
[2)] For temperature range 72/120°C: $N_{Rk\,(72/120°C)} = 0{,}83 \cdot N_{Rk\,(50/80°C)}$.

Table C17.2: Characteristic resistance to local brick failure or brick edge failure of a single anchor under shear loading

Anchor rod		**M6**	**M8**	**M6**	**M8**	**-**	**M8**	**M10**	**M8**	**M10**	**-**	**M12**	**M16**	**M12**	**M16**
Internal threaded anchor UPM-I		**-**		**-**		**M6 M8** / **11x85**	**-**		**-**		**M10 M12** / **15x85**	**-**		**-**	
Perforated sleeve UPM SH K		**12x50**		**12x85**		**16x85**			**16x130**		**20x85**			**20x130**	
$V_{Rk} = V_{Rk,b} = V_{Rk,c,II} = V_{Rk,c,\perp}$ [kN]; temperature range 50/80°C and 72/120°C															
Mean compressive strength / Min. compressive strength single brick [1)]	Use con-ditions														
10 / 8 N/mm²	w/w w/d d/d	1,5					3,0					2,5	3,0	2,5	
12,5 / 10 N/mm²	w/w w/d d/d	2,0					3,5								
15 / 12 N/mm²	w/w w/d d/d	2,5					4,5					4,0	4,5	4,0	
20 / 16 N/mm²	w/w w/d d/d	3,0	3,5	3,0	3,5	3,0	6,0					5,5	6,0	5,5	
25 / 20 N/mm²	w/w w/d d/d	4,0	4,5	4,0	4,5	4,0	7,5					6,5	7,5	6,5	

[1)] The minimum compressive strength of the single brick must not be less than 80% of the mean compressive strength. Factor for job site tests and displacements see annex C44.

Upat injection system UPM 33 for masonry

Performance
Perforated calcium silicate brick KSL, 3DF, Characteristic resistance under tension loading

Annex C17

Vertical perforated brick HLz, EN 771-1:2011+A1:2015

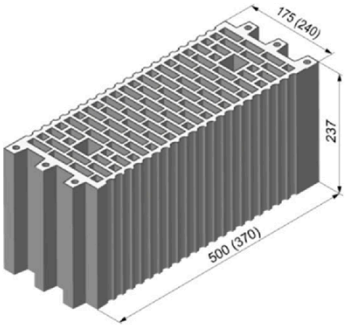

Producer		e.g. Wienerberger, Poroton		
Nominal dimensions	[mm]	length L	width W	height H
		500	175	237
		370	240	237
Mean gross dry density ρ	[kg/dm³]	≥ 1,0		
Mean compressive strength / Min. compressive strength single brick [1)]	[N/mm²]	5 / 4 or 7,5 / 6 or 10 / 8 or 12,5 / 10 or 15 / 12		
Standard or annex		EN 771-1:2011+A1:2015		

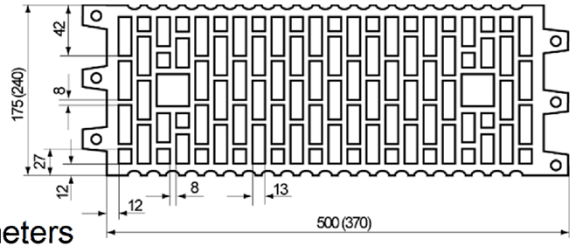

Dimension see also Annex B11

Table C18.1: Installation parameters

Anchor rod		**M6**	**M8**	**M6**	**M8**	**-**		**M8**	**M10**	**M8**	**M10**	**-**		**M12**	**M16**	**M12**	**M16**
Internal threaded anchor UPM-I		**-**		**-**		**M6**	**M8**	**-**		**-**		**M10**	**M12**	**-**		**-**	
						11x85						**15x85**					
Perforated sleeve UPM SH K		**12x50**		**12x85**		**16x85**				**16x130**		**20x85**				**20x130**	
Anchor rod and internal threaded anchor UPM-I with perforated sleeve UPM SH K																	
Max. installation torque	max T_{inst}	[Nm]	2														
General installation parameters																	
Edge distance	$c_{min} = c_{cr}$	[mm]	100														
Spacing	s_{min} ∥	[mm]	100														
	s_{cr} ∥	[mm]	500 (370)														
	s_{min} ⊥	[mm]	100														
	s_{cr} ⊥	[mm]	240														
Drilling method																	
Hammer drilling with hard metal hammer drill																	

[1)] The minimum compressive strength of the single brick must not be less than 80% of the mean compressive strength.

Table C19.2: Group factors

Anchor rod		**M6**	**M8**	**M6**	**M8**	**-**		**M8**	**M10**	**M8**	**M10**	**-**		**M12**	**M16**	**M12**	**M16**
Internal threaded anchor UPM-I		**-**		**-**		**M6**	**M8**	**-**		**-**		**M10**	**M12**	**-**		**-**	
						11x85						**15x85**					
Perforated sleeve UPM SH K		**12x50**		**12x85**		**16x85**				**16x130**		**20x85**				**20x130**	
Group factors	$\alpha_{g,N}$ (s_{min} ∥) = $\alpha_{g,V}$ (s_{min} ∥)	[-]	1														
	$\alpha_{g,N}$ (s_{min} ⊥) = $\alpha_{g,V}$ (s_{min} ⊥)	[-]	1														

Upat injection system UPM 33 for masonry

Performance
Vertical perforated brick HLz, dimensions, installation parameters, Group factors

Annex C18

Vertical perforated brick HLz, EN 771-1:2011+A1:2015

Table C19.1: Characteristic resistance to pull-out failure or brick breakout failure of a single anchor under tension loading

Anchor rod		**M6**	**M8**	**M6**	**M8**	**-**	**M8**	**M10**	**M8**	**M10**	**-**	**M12**	**M16**	**M12**	**M16**
Internal threaded anchor UPM-I		**-**		**-**		**M6 M8** **11x85**	**-**		**-**		**M10 M12** **15x85**	**-**		**-**	
Perforated sleeve UPM SH K		**12x50**		**12x85**		**16x85**			**16x130**		**20x85**			**20x130**	
$N_{Rk} = N_{Rk,p} = N_{Rk,b} = N_{Rk,p,c} = N_{Rk,b,c}$ [kN]; temperature range 50/80°C [2)]															
Mean compressive strength / Min. comp. strength single brick [1)]	Use con-ditions														
5 / 4 N/mm²	w/w w/d	0,30				0,90								1,20	
	d/d	0,40				0,90								1,20	
7,5 / 6 N/mm²	w/w w/d	0,50				1,50								2,00	
	d/d	0,60				1,50								2,00	
10 / 8 N/mm²	w/w w/d	0,75				2,00								2,50	
	d/d	0,75				2,00								2,50	
12,5 / 10 N/mm²	w/w w/d	0,90				2,50								3,00	
	d/d	0,90				2,50								3,50	
15 / 12 N/mm²	w/w w/d	0,90				3,00								3,50	
	d/d	1,20				3,00								4,00	

[1)] The minimum compressive strength of the single brick must not be less than 80% of the mean compressive strength.
[2)] For temperature range 72/120°C: $N_{Rk\,(72/120°C)} = 0{,}83 \cdot N_{Rk\,(50/80°C)}$.

Table C19.2: Characteristic resistance to local brick failure or brick edge failure of a single anchor under shear loading

Anchor rod		**M6**	**M8**	**M6**	**M8**	**-**	**M8**	**M10**	**M8**	**M10**	**-**	**M12**	**M16**	**M12**	**M16**
Internal threaded anchor UPM-I		**-**		**-**		**M6 M8** **11x85**	**-**		**-**		**M10 M12** **15x85**	**-**		**-**	
Perforated sleeve UPM SH K		**12x50**		**12x85**		**16x85**			**16x130**		**20x85**			**20x130**	
$V_{Rk} = V_{Rk,b} = V_{Rk,c,II} = V_{Rk,c,\perp}$ [kN]; temperature range 50/80°C and 72/120°C															
Mean compressive strength / Min. comp. strength single brick [1)]	Use con-ditions														
5 / 4 N/mm²	w/w w/d d/d	0,50							0,60		0,50			0,60	
7,5 / 6 N/mm²		0,75							0,90		0,75			0,90	
10 / 8 N/mm²		0,90							1,20		0,90			1,20	
12,5 / 10 N/mm²		1,20							1,50		1,20			1,50	
15 / 12 N/mm²		1,50							2,00		1,50			2,00	

[1)] The minimum compressive strength of the single brick must not be less than 80% of the mean compressive strength.

Factor for job site tests and displacements see annex C44.

Upat injection system UPM 33 for masonry

Performance
Vertical perforated brick HLz, Characteristic resistance under tension and shear loading

Annex C19

Vertical perforated brick HLz, 2DF, EN 771-1:2011+A1:2015

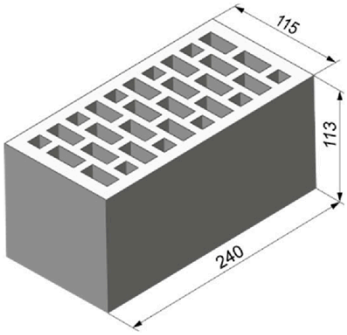

Producer		e.g. Wienerberger		
Nominal dimensions	[mm]	length L	width W	height H
		240	115	113
Mean gross dry density ρ	[kg/dm³]	≥ 1,4		
Mean compressive strength / Min. compressive strength single brick [1)]	[N/mm²]	7,5 / 6 or 12,5 / 10 or 20 / 16 or 25 / 20 or 35 / 28		
Standard or annex		EN 771-1:2011+A1:2015		

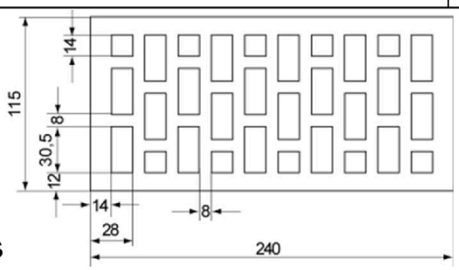

Dimension see also Annex B11

Table C20.1: Installation parameters

Anchor rod	M6	M8	M6	M8	-		M8	M10	-		M12	M16
Internal threaded anchor UPM-I	-		-		M6	M8	-		M10	M12	-	
					11x85				15x85			
Perforated sleeve UPM SH K	12x50		12x85		16x85				20x85			

Anchor rod and internal threaded anchor UPM-I with perforated sleeve UPM SH K			
Max. installation torque	max T_{inst}	[Nm]	2
General installation parameters			
Edge distance	$c_{min} = c_{cr}$	[mm]	80
Spacing	s_{cr} ∥ = s_{min} ∥	[mm]	240
	s_{cr} ⊥ = s_{min} ⊥	[mm]	115
Drilling method			
Hammer drilling with hard metal hammer drill			

[1)] The minimum compressive strength of the single brick must not be less than 80% of the mean compressive strength.

Table C20.2: Group factors

Anchor rod	M6	M8	M6	M8	-		M8	M10	-		M12	M16
Internal threaded anchor UPM-I	-		-		M6	M8	-		M10	M12	-	
					11x85				15x85			
Perforated sleeve UPM SH K	12x50		12x85		16x85				20x85			

Group factors	$\alpha_{g,N}$ (s_{min} ∥)	[-]	2
	$\alpha_{g,V}$ (s_{min} ∥)		
	$\alpha_{g,N}$ (s_{min} ⊥)		
	$\alpha_{g,V}$ (s_{min} ⊥)		

Upat injection system UPM 33 for masonry

Performance
Vertical perforated brick HLz, 2DF, dimensions, installation parameters, Group factors

Annex C20

Vertical perforated brick HLz, 2DF, EN 771-1:2011+A1:2015

Table C21.1: Characteristic resistance to pull-out failure or brick breakout failure of a single anchor under tension loading

Anchor rod		**M6**	**M8**	**M6**	**M8**	**-**	**M8**	**M10**	**-**	**M12**	**M16**
Internal threaded anchor UPM-I		**-**		**-**		**M6 M8** / **11x85**	**-**		**M10 M12** / **15x85**	**-**	
Perforated sleeve UPM SH K		**12x50**		**12x85**		**16x85**			**20x85**		
$N_{Rk} = N_{Rk,p} = N_{Rk,b} = N_{Rk,p,c} = N_{Rk,b,c}$ [kN]; temperature range 50/80°C [2)]											
Mean compressive strength / Min. compressive strength single brick [1)]	Use con-ditions										
7,5 / 6 N/mm²	w/w w/d	0,75		0,90		0,75			0,90		
	d/d	0,75		1,20		0,75			0,90		
12,5 / 10 N/mm²	w/w w/d	1,20		1,50		1,20			1,50		
	d/d	1,20		2,00		1,20			1,50		
20 / 16 N/mm²	w/w w/d	2,00		2,50		2,00			2,00		
	d/d	2,00		3,00		2,00			2,50		
25 / 20 N/mm²	w/w w/d	2,50		3,50		2,50			3,00		
	d/d	2,50		4,00		2,50			3,00		
35 / 28 N/mm²	w/w w/d	3,00		5,00		3,50			4,00		
	d/d	3,50		5,50		3,50			4,50		

[1)] The minimum compressive strength of the single brick must not be less than 80% of the mean compressive strength.
[2)] For temperature range 72/120°C: $N_{Rk\,(72/120°C)} = 0{,}83 \cdot N_{Rk\,(50/80°C)}$.

Table C21.2: Characteristic resistance to local brick failure or brick edge failure of a single anchor under shear loading

Anchor rod		**M6**	**M8**	**M6**	**M8**	**-**	**M8**	**M10**	**-**	**M12**	**M16**
Internal threaded anchor UPM-I		**-**		**-**		**M6 M8** / **11x85**	**-**		**M10 M12** / **15x85**	**-**	
Perforated sleeve UPM SH K		**12x50**		**12x85**		**16x85**			**20x85**		
$V_{Rk} = V_{Rk,b} = V_{Rk,c,II} = V_{Rk,c,\perp}$ [kN]; temperature range 50/80°C and 72/120°C											
Mean compressive strength / Min. compressive strength single brick [1)]	Use con-ditions										
7,5 / 6 N/mm²	w/w w/d d/d	1,2	1,5	1,2	2,0	1,2	1,5		2,5		
12,5 / 10 N/mm²		2,0	2,5	2,0	4,0	2,0	2,5		4,5		
20 / 16 N/mm²		3,0	3,5	3,0	6,0	3,0	3,5		7,0		
25 / 20 N/mm²		4,0	4,5	4,0	7,5	4,0	4,5		8,5		
35 / 28 N/mm²		5,0	6,5	5,0	9,5	5,0	6,5		12,0		

[1)] The minimum compressive strength of the single brick must not be less than 80% of the mean compressive strength.

Factor for job site tests and displacements see annex C44.

Upat injection system UPM 33 for masonry

Performance
Vertical perforated brick HLz, 2DF,
Characteristic resistance under tension and shear loading

Annex C21

Vertical perforated brick HLz, T10, T11, EN 771-1:2011+A1:2015

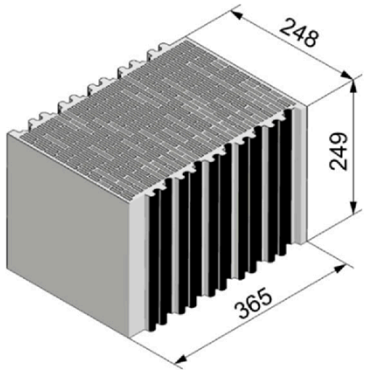

Producer		e.g. Wienerberger		
Nominal dimensions	[mm]	length L	width W	height H
		248	365	249
Mean gross dry density ρ	[kg/dm³]	0,7		
Mean compressive strength / Min. compressive strength single brick [1)]	[N/mm²]	10 / 8 or 12,5 / 10 or 15 / 12		
Standard or annex		EN 771-1:2011+A1:2015		

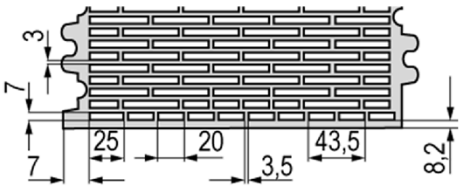

Dimension see also Annex B11

Table C22.1: Installation parameters
(installation with perforated sleeve UPM SH K)

Anchor rod			**M6**	**M8**	**M6**	**M8**	**-**	**M8**	**M10**	**M8**	**M10**	**-**	**M12**	**M16**	**M12**	**M16**	**M12**	**M16**
Internal threaded anchor UPM-I			**-**		**-**		**M6 M8** **11x85**	**-**		**-**		**M10 M12** **15x85**	**-**		**-**		**-**	
Perforated sleeve UPM SH K			**12x50**		**12x85**		**16x85**			**16x130**		**20x85**			**20x130**		**20x200**	
Anchor rod and internal threaded anchor UPM-I with perforated sleeve UPM SH K																		
Max. installation torque	max T_{inst}	[Nm]	3					5		3		5						
General installation parameters																		
Edge distance	$c_{min} = c_{cr}$	[mm]	60															
Spacing	s_{min} ∥	[mm]	80															
	s_{cr} ∥	[mm]	250															
	s_{min} ⊥	[mm]	80															
	s_{cr} ⊥	[mm]	250															
Drilling method																		
Rotary drilling with carbide drill																		

[1)] The minimum compressive strength of the single brick must not be less than 80% of the mean compressive strength.

Table C22.2: Group factors

Anchor rod			**M6**	**M8**	**M6**	**M8**	**-**	**M8**	**M10**	**M8**	**M10**	**-**	**M12**	**M16**	**M12**	**M16**	**M12**	**M16**
Internal threaded anchor UPM-I			**-**		**-**		**M6 M8** **11x85**	**-**		**-**		**M10 M12** **15x85**	**-**		**-**		**-**	
Perforated sleeve UPM SH K			**12x50**		**12x85**		**16x85**			**16x130**		**20x85**			**20x130**		**20x200**	
Group factors	$\alpha_{g,N}$ (s_{min} ∥)	[-]	1,7															
	$\alpha_{g,V}$ (s_{min} ∥)	[-]	0,5															
	$\alpha_{g,N}$ (s_{min} ⊥)	[-]	1,3															
	$\alpha_{g,V}$ (s_{min} ⊥)	[-]	0,5															

Upat injection system UPM 33 for masonry

Performance
Vertical perforated brick HLz, T10, T11, dimensions, installation parameters, Group factors

Annex C22

Vertical perforated brick HLz, T10, T11, EN 771-1:2011+A1:2015

Table C23.1: Characteristic resistance to pull-out failure or brick breakout failure of a single anchor under tension loading

Anchor rod	**M6**	**M8**	**M6**	**M8**	**-**	**M8**	**M10**	**M8**	**M10**	**-**	**M12**	**M16**	**M12**	**M16**	**M12**	**M16**
Internal threaded anchor UPM-I	-		-		**M6 M8** **11x85**	-		-		**M10 M12** **15x85**	-		-		-	
Perforated sleeve UPM SH K	**12x50**		**12x85**		**16x85**			**16x130**		**20x85**			**20x130**		**20x200**	

$N_{Rk} = N_{Rk,p} = N_{Rk,b} = N_{Rk,p,c} = N_{Rk,b,c}$ [kN]; temperature range 50/80°C [2)]			
Mean compressive strength / Min. compressive strength single brick [1)]	Use con-ditions		
10 / 8 N/mm²	w/w w/d	1,5	1,5
	d/d	1,5	2,0
12,5 / 10 N/mm²	w/w w/d	1,5	2,0
	d/d	2,0	2,0
15 / 12 N/mm²	w/w w/d	2,0	2,0
	d/d	2,0	2,5

[1)] The minimum compressive strength of the single brick must not be less than 80% of the mean compressive strength.
[2)] For temperature range 72/120°C: $N_{Rk\,(72/120°C)} = 0{,}83 \cdot N_{Rk\,(50/80°C)}$.

Table C23.2: Characteristic resistance to local brick failure or brick edge failure of a single anchor under shear loading

Anchor rod	**M6**	**M8**	**M6**	**M8**	**-**	**M8**	**M10**	**M8**	**M10**	**-**	**M12**	**M16**	**M12**	**M16**	**M12**	**M16**
Internal threaded anchor UPM-I	-		-		**M6 M8** **11x85**	-		-		**M10 M12** **15x85**	-		-		-	
Perforated sleeve UPM SH K	**12x50**		**12x85**		**16x85**			**16x130**		**20x85**			**20x130**		**20x200**	

$V_{Rk} = V_{Rk,b} = V_{Rk,c,II} = V_{Rk,c,\perp}$ [kN]; temperature range 50/80°C and 72/120°C				
Mean compressive strength / Min. compressive strength single brick [1)]	Use con-ditions			
10 / 8 N/mm²	w/w w/d d/d	0,9	1,5	2,0
12,5 / 10 N/mm²	w/w w/d d/d	0,9	1,5	2,0
15 / 12 N/mm²	w/w w/d d/d	1,2	2,0	2,0

[1)] The minimum compressive strength of the single brick must not be less than 80% of the mean compressive strength.

Factor for job site tests and displacements see annex C44

Upat injection system UPM 33 for masonry	**Annex C23**
Performance Vertical perforated brick HLz, T10, T11, Characteristic resistance under tension loading and shear loading	

Vertical perforated brick HLz, FZ 7, filled with mineral wool, EN 771-1:2011+A1:2015

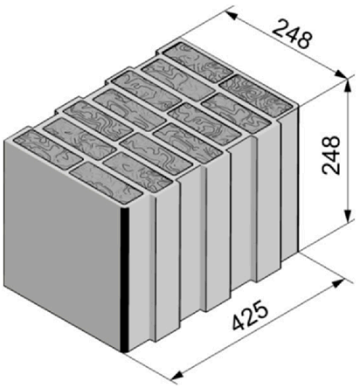

Producer		e.g. Wienerberger		
Nominal dimensions	[mm]	length L	width W	height H
		248	425	248
Mean gross dry density ρ	[kg/dm³]	0,8		
Mean compressive strength / Min. compressive strength single brick [1)]	[N/mm²]	5 / 4 or 7,5 / 6 or 10 / 8		
Standard or annex		EN 771-1:2011+A1:2015		

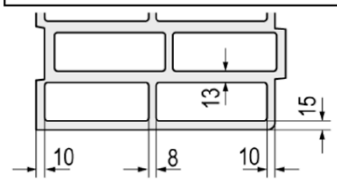

Dimension see also Annex B12

Table C24.1: Installation parameters
(Pre-positioned installation with perforated sleeve UPM SH K)

Anchor rod			**M6**	**M8**	**M6**	**M8**	**-**	**M8**	**M10**	**M8**	**M10**	**-**	**M12**	**M16**	**M12**	**M16**	**M12**	**M16**
Internal threaded anchor UPM-I			-		-		**M6** / **11x85**	**M8**	-	-		**M10** / **15x85**	**M12**	-	-		-	
Perforated sleeve UPM SH K			**12x50**		**12x85**		**16x85**			**16x130**		**20x85**			**20x130**		**20x200**	
Anchor rod and internal threaded anchor UPM-I with perforated sleeve UPM SH K																		
Max. installation torque	max T_{inst}	[Nm]	2						5	2		5						
General installation parameters																		
Edge distance	$c_{min} = c_{cr}$	[mm]	60															
Spacing	s_{min} ∥	[mm]	80															
	s_{cr} ∥	[mm]	250															
	s_{min} ⊥	[mm]	80															
	s_{cr} ⊥	[mm]	250															
Drilling method																		
Rotary drilling with carbide drill																		

[1)] The minimum compressive strength of the single brick must not be less than 80% of the mean compressive strength.

Table C24.2: Group factors

Anchor rod			**M6**	**M8**	**M6**	**M8**	**-**	**M8**	**M10**	**M8**	**M10**	**-**	**M12**	**M16**	**M12**	**M16**	**M12**	**M16**
Internal threaded anchor UPM-I			-		-		**M6** / **11x85**	**M8**	-	-		**M10** / **15x85**	**M12**	-	-		-	
Perforated sleeve UPM SH K			**12x50**		**12x85**		**16x85**			**16x130**		**20x85**			**20x130**		**20x200**	
Group factors	$\alpha_{g,N}$ (s_{min} ∥)	[-]	1,9															
	$\alpha_{g,V}$ (s_{min} ∥)	[-]	0,9															
	$\alpha_{g,N}$ (s_{min} ⊥)	[-]	1,0															
	$\alpha_{g,V}$ (s_{min} ⊥)	[-]	0,7															

Upat injection system UPM 33 for masonry

Performance
Vertical perforated brick HLz, FZ 7, filled with mineral wool;
dimensions, installation parameters, Group factors

Annex C24

Vertical perforated brick HLz, FZ 7, filled with mineral wool, EN 771-1:2011+A1:2015

Table C25.1: Characteristic resistance to pull-out failure or brick breakout failure of a single anchor under tension loading

Anchor rod		**M6**	**M8**	**M6**	**M8**	**-**	**M8**	**M10**	**M8**	**M10**	**-**	**M12**	**M16**	**M12**	**M16**	**M12**	**M16**
Internal threaded anchor UPM-I		**-**		**-**		**M6 M8 11x85**	**-**		**-**		**M10 M12 15x85**	**-**		**-**		**-**	
Perforated sleeve UPM SH K		**12x50**		**12x85**		**16x85**			**16x130**		**20x85**			**20x130**		**20x200**	
$N_{Rk} = N_{Rk,p} = N_{Rk,b} = N_{Rk,p,c} = N_{Rk,b,c}$ [kN]; temperature range 50/80°C [2)]																	
Mean compressive strength / Min. compressive strength single brick [1)]	Use con-ditions																
5 / 4 N/mm²	w/w w/d	0,60		0,75		1,50			2,00		1,20			2,00		2,00	
	d/d	0,60		0,90		1,50			2,00		1,50			2,00		2,50	
7,5 / 6 N/mm²	w/w w/d	0,75		0,90		1,50			2,00		1,50			2,50		2,50	
	d/d	0,90		0,90		2,00			2,50		2,00			2,50		3,00	
10 / 8 N/mm²	w/w w/d	0,90		1,20		2,00			2,50		2,00			2,50		3,00	
	d/d	0,90		1,20		2,00			3,00		2,00			3,00		3,50	

[1)] The minimum compressive strength of the single brick must not be less than 80% of the mean compressive strength.
[2)] For temperature range 72/120°C: $N_{Rk\,(72/120°C)} = 0{,}83 \cdot N_{Rk\,(50/80°C)}$.

Table C25.2: Characteristic resistance to local brick failure or brick edge failure of a single anchor under shear loading

Anchor rod		**M6**	**M8**	**M6**	**M8**	**-**	**M8**	**M10**	**M8**	**M10**	**-**	**M12**	**M16**	**M12**	**M16**	**M12**	**M16**
Internal threaded anchor UPM-I		**-**		**-**		**M6 M8 11x85**	**-**		**-**		**M10 M12 15x85**	**-**		**-**		**-**	
Perforated sleeve UPM SH K		**12x50**		**12x85**		**16x85**			**16x130**		**20x85**			**20x130**		**20x200**	
$V_{Rk} = V_{Rk,b} = V_{Rk,c,II} = V_{Rk,c,\perp}$ [kN]; temperature range 50/80°C and 72/120°C																	
Mean compressive strength / Min. compressive strength single brick [1)]	Use con-ditions																
5 / 4 N/mm²	w/w w/d	1,2		1,5												1,5	
	d/d																
7,5 / 6 N/mm²	w/w w/d	1,5		2,0												1,5	
	d/d																
10 / 8 N/mm²	w/w w/d	1,5		2,5												2,0	
	d/d																

[1)] The minimum compressive strength of the single brick must not be less than 80% of the mean compressive strength.

Factor for job site tests and displacements see annex C44

Upat injection system UPM 33 for masonry	**Annex C25**
Performance Vertical perforated brick HLz, FZ 7, filled with mineral wool; Characteristic resistance under tension loading and shear loading	

Vertical perforated brick HLz, EN 771-1:2011+A1:2015

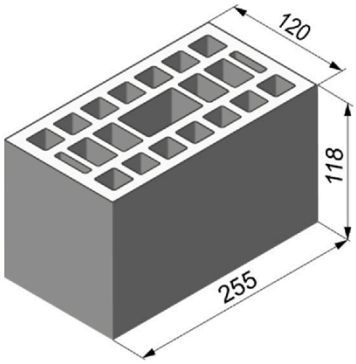

Producer		e.g. Wienerberger		
Nominal dimensions	[mm]	length L	width W	height H
		255	120	118
Mean gross dry density ρ	[kg/dm³]	≥ 1,0		
Mean compressive strength / Min. compressive strength single brick [1)]	[N/mm²]	2,5 / 2 or 5 / 4 or 8 / 6 or 10 / 8 or 12,5 / 10 or 15 / 12		
Standard or annex		EN 771-1:2011+A1:2015		

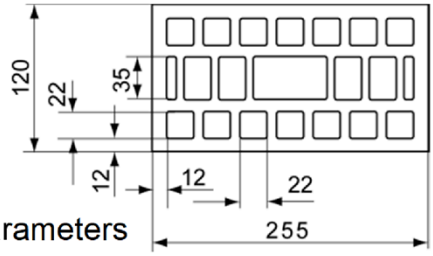

Dimension see also Annex B12

Table C26.1: Installation parameters

Anchor rod		M6	M8	M6	M8	-		M8	M10	-		M12	M16
Internal threaded anchor UPM-I		-		-		M6	M8	-		M10	M12	-	
						11x85				15x85			
Perforated sleeve UPM SH K		12x50		12x85		16x85				20x85			
Anchor rod and internal threaded anchor UPM-I with perforated sleeve UPM SH K													
Max. installation torque	max T_{inst}	[Nm]	2										
General installation parameters													
Edge distance	$c_{min} = c_{cr}$	[mm]	60										
Spacing	s_{cr} ∥ = s_{min} ∥	[mm]	255										
	s_{cr} ⊥ = s_{min} ⊥	[mm]	120										
Drilling method													
Hammer drilling with hard metal hammer drill													

[1)] The minimum compressive strength of the single brick must not be less than 80% of the mean compressive strength.

Table C26.2: Group factors

Anchor rod		M6	M8	M6	M8	-		M8	M10	-		M12	M16
Internal threaded anchor UPM-I		-		-		M6	M8	-		M10	M12	-	
						11x85				15x85			
Perforated sleeve UPM SH K		12x50		12x85		16x85				20x85			
Group factors	$\alpha_{g,N}$ (s_{min} ∥)	[-]	2										
	$\alpha_{g,V}$ (s_{min} ∥)	[-]	2										
	$\alpha_{g,N}$ (s_{min} ⊥)	[-]	2										
	$\alpha_{g,V}$ (s_{min} ⊥)	[-]	2										

Upat injection system UPM 33 for masonry

Performance
Vertical perforated brick HLz, dimensions, installation parameters, Group factors

Annex C26

Vertical perforated brick HLz, EN 771-1:2011+A1:2015

Table C27.1: Characteristic resistance to pull-out failure or brick breakout failure of a single anchor under tension loading

Anchor rod		**M6**	**M8**	**M6**	**M8**	**-**		**M8**	**M10**	**-**		**M12**	**M16**
Internal threaded anchor UPM-I		**-**		**-**		**M6**	**M8**	**-**		**M10**	**M12**	**-**	
						11x85				**15x85**			
Perforated sleeve UPM SH K		**12x50**		**12x85**		**16x85**				**20x85**			
$N_{Rk} = N_{Rk,p} = N_{Rk,b} = N_{Rk,p,c} = N_{Rk,b,c}$ [kN]; temperature range 50/80°C [1]													
Mean compressive strength / Min. compressive strength single brick [2]	Use con-ditions												
2,5 / 2 N/mm²	w/w w/d	0,40		0,50						-[3]			
	d/d	0,50		0,50						-[3]			
5 / 4 N/mm²	w/w w/d	0,90		0,90						0,50			
	d/d	0,90		1,20						0,50			
8 / 6 N/mm²	w/w w/d	1,20		1,50						0,75			
	d/d	1,50		1,50						0,75			
10 / 8 N/mm²	w/w w/d	1,50		2,00						0,90			
	d/d	2,00		2,00						0,90			
12,5 / 10 N/mm²	w/w w/d	2,00		2,50						1,20			
	d/d	2,50		2,50						1,20			
15 / 12 N/mm²	w/w w/d	2,50		3,00						1,50			
	d/d	3,00		3,50						1,50			

[1] For temperature range 72/120°C: $N_{Rk\,(72/120°C)} = 0{,}83 \cdot N_{Rk\,(50/80°C)}$.
[2] The minimum compressive strength of the single brick must not be less than 80% of the mean compressive strength.
[3] No performance assessed.

Factor for job site tests and displacements see annex C44.

Upat injection system UPM 33 for masonry

Performance
Vertical perforated brick HLz, Characteristic resistance under tension loading

Annex C27

Vertical perforated brick HLz, EN 771-1:2011+A1:2015

Table C28.1: Characteristic resistance to local brick failure or brick edge failure of a single anchor under shear loading

Anchor rod		**M6**	**M8**	**M6**	**M8**	**-**		**M8**	**M10**	**-**		**M12**	**M16**
Internal threaded anchor UPM-I		**-**		**-**		**M6**	**M8**	**-**		**M10**	**M12**	**-**	
						11x85				**15x85**			
Perforated sleeve UPM SH K		**12x50**		**12x85**		**16x85**				**20x85**			
$V_{Rk} = V_{Rk,b} = V_{Rk,c,II} = V_{Rk,c,\perp}$ [kN]; temperature range 50/80°C and 72/120°C													
Mean compressive strength / Min. compressive strength single brick [1]	Use con-dition												
2,5 / 2 N/mm²	w/w w/d d/d	0,60	0,75	0,60	0,75	0,90							
5 / 4 N/mm²	w/w w/d d/d	1,20	1,50	1,20	1,50	2,00							
8 / 6 N/mm²	w/w w/d d/d	2,00	2,00	2,00	2,00	2,50							
10 / 8 N/mm²	w/w w/d d/d	2,50	3,00	2,50	3,00	3,50							
12,5 / 10 N/mm²	w/w w/d d/d	3,00	3,50	3,00	3,50	4,50							
15 / 12 N/mm²	w/w w/d d/d	4,00	4,50	4,00	4,50	5,50							

[1] The minimum compressive strength of the single brick must not be less than 80% of the mean compressive strength.

Factor for job site tests and displacements see annex C44.

Upat injection system UPM 33 for masonry

Performance
Vertical perforated brick HLz, Characteristic resistance under shear loading

Annex C28

Vertical perforated brick HLz, EN 771-1:2011+A1:2015

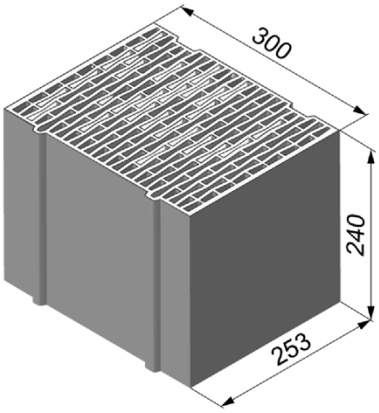

Producer		e.g. Ziegelwerk Brenna		
Nominal dimensions	[mm]	length L	width W	height H
		253	300	240
Mean gross dry density ρ	[kg/dm³]	≥ 0,8		
Mean compressive strength / Min. compressive strength single brick [1)]	[N/mm²]	2,5 / 2 or 5 / 4 or 8 / 6		
Standard or annex		EN 771-1:2011+A1:2015		

Dimension see also Annex B12

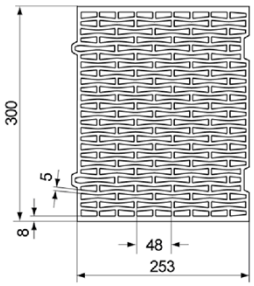

Table C29.1: Installation parameters
(installation with perforated sleeve UPM SH K)

Anchor rod		**M6**	**M8**	**M6**	**M8**	**-**		**M8**	**M10**	**M8**	**M10**	**-**		**M12**	**M16**	**M12**	**M16**
Internal threaded anchor UPM-I		**-**		**-**		**M6**	**M8**	**-**		**-**		**M10**	**M12**	**-**		**-**	
						11x85						**15x85**					
Perforated sleeve UPM SH K		**12x50**		**12x85**		**16x85**				**16x130**		**20x85**				**20x130**	
Anchor rod and internal threaded anchor UPM-I with perforated sleeve UPM SH K																	
Max. installation torque	max T_{inst}	[Nm]	2														
General installation parameters																	
Edge distance	$c_{min} = c_{cr}$	[mm]	60														
Spacing	s_{min} ∥ = s_{cr} ∥	[mm]	255														
	s_{min} ⊥ = s_{cr} ⊥	[mm]	240														
Drilling method																	
Hammer drilling with hard metal hammer drill																	

[1)] The minimum compressive strength of the single brick must not be less than 80% of the mean compressive strength.

Table C29.2: Group factors

Anchor rod		**M6**	**M8**	**M6**	**M8**	**-**		**M8**	**M10**	**M8**	**M10**	**-**		**M12**	**M16**	**M12**	**M16**
Internal threaded anchor UPM-I		**-**		**-**		**M6**	**M8**	**-**		**-**		**M10**	**M12**	**-**		**-**	
						11x85						**15x85**					
Perforated sleeve UPM SH K		**12x50**		**12x85**		**16x85**				**16x130**		**20x85**				**20x130**	
Group factors	$\alpha_{g,N}$ (s_{min} ∥)	[-]	2														
	$\alpha_{g,V}$ (s_{min} ∥)	[-]	2														
	$\alpha_{g,N}$ (s_{min} ⊥)	[-]	2														
	$\alpha_{g,V}$ (s_{min} ⊥)	[-]	2														

Upat injection system UPM 33 for masonry

Performance
Vertical perforated brick HLz, dimensions, installation parameters, Group factors

Annex C29

Vertical perforated brick HLz, EN 771-1:2011+A1:2015

Table C30.1: Characteristic resistance to pull-out failure or brick breakout failure of a single anchor under tension loading

Anchor rod		**M6**	**M8**	**M6**	**M8**	**-**	**M8**	**M10**	**M8**	**M10**	**-**	**M12**	**M16**	**M12**	**M16**
Internal threaded anchor UPM-I		-		-		**M6 M8** / **11x85**	-		-		**M10 M12** / **15x85**	-		-	
Perforated sleeve UPM SH K		**12x50**		**12x85**		**16x85**			**16x130**		**20x85**			**20x130**	
$N_{Rk} = N_{Rk,p} = N_{Rk,b} = N_{Rk,p,c} = N_{Rk,b,c}$ [kN]; temperature range 50/80°C [2)]															
Mean compressive strength / Min. compressive strength single brick [1)]	Use con-ditions														
2,5 / 2 N/mm²	w/w w/d	-[3)]		0,50		0,50			0,40		0,50			0,40	
	d/d	0,30		0,50		0,50			0,50		0,50			0,50	
5 / 4 N/mm²	w/w w/d	0,50		0,90		0,90			0,90		0,90			0,90	
	d/d	0,60		0,90		0,90			0,90		0,90			0,90	
8 / 6 N/mm²	w/w w/d	0,75		1,50		1,50			1,20		1,50			1,20	
	d/d	0,90		1,50		1,50			1,50		1,50			1,50	

[1)] The minimum compressive strength of the single brick must not be less than 80% of the mean compressive strength.
[2)] For temperature range 72/120°C: $N_{Rk\,(72/120°C)} = 0{,}83 \cdot N_{Rk\,(50/80°C)}$.
[3)] No performance assessed.

Table C30.2: Characteristic resistance to local brick failure or brick edge failure of a single anchor under shear loading

Anchor rod		**M6**	**M8**	**M6**	**M8**	**-**	**M8**	**M10**	**M8**	**M10**	**-**	**M12**	**M16**	**M12**	**M16**
Internal threaded anchor UPM-I		-		-		**M6 M8** / **11x85**	-		-		**M10 M12** / **15x85**	-		-	
Perforated sleeve UPM SH K		**12x50**		**12x85**		**16x85**			**16x130**		**20x85**			**20x130**	
$V_{Rk} = V_{Rk,b} = V_{Rk,c,II} = V_{Rk,c,\perp}$ [kN]; temperature range 50/80°C and 72/120°C															
Mean compressive strength / Min. compressive strength single brick [1)]	Use con-ditions														
2,5 / 2 N/mm²	w/w w/d	0,5									0,6				
	d/d														
5 / 4 N/mm²	w/w w/d	0,9									1,2				
	d/d														
8 / 6 N/mm²	w/w w/d	1,5									1,5				
	d/d														

[1)] The minimum compressive strength of the single brick must not be less than 80% of the mean compressive strength.

Factor for job site tests and displacements see annex C44

Upat injection system UPM 33 for masonry	**Annex C30**
Performance Vertical perforated brick HLz, Characteristic resistance under tension loading	

Vertical perforated brick HLz, Porotherm W 44, filled with mineral wool, EN 771-1:2011+A1:2015

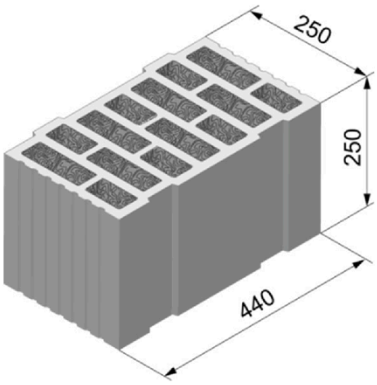

Producer		e.g. Wienerberger		
Nominal dimensions	[mm]	length L	width W	height H
		250	440	250
Mean gross dry density ρ	[kg/dm³]	0,7		
Mean compressive strength / Min. compressive strength single brick [1)]	[N/mm²]	8 / 6 or 10 / 8 or 12,5 / 10		
Standard or annex		EN 771-1:2011+A1:2015		

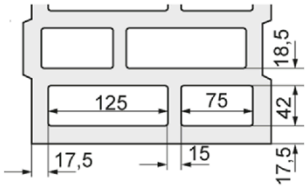

Dimension see also Annex B12

Table C31.1: Installation parameters (installation with perforated sleeve UPM SH K)

Anchor rod	M6	M8	M6	M8	-	M8	M10	M8	M10	-	M12	M16	M12	M16	M12	M16
Internal threaded anchor UPM-I	-		-		M6 M8 11x85	-		-		M10 M12 15x85	-		-		-	
Perforated sleeve UPM SH K	12x50		12x85		16x85			16x130		20x85			20x130		20x200	

Anchor rod and internal threaded anchor UPM-I with perforated sleeve UPM SH K								
Max. installation torque	max T_{inst}	[Nm]	2	5	2	5	6	
General installation parameters								
Edge distance	$c_{min} = c_{cr}$	[mm]	60					
Spacing	s_{min} ∥	[mm]	80					
	s_{cr} ∥	[mm]	250					
	s_{min} ⊥	[mm]	80					
	s_{cr} ⊥	[mm]	250					
Drilling method								
Rotary drilling with carbide drill								

[1)] The minimum compressive strength of the single brick must not be less than 80% of the mean compressive strength.

Table C31.2: Group factors

Anchor rod	M6	M8	M6	M8	-	M8	M10	M8	M10	-	M12	M16	M12	M16	M12	M16
Internal threaded anchor UPM-I	-		-		M6 M8 11x85	-		-		M10 M12 15x85	-		-		-	
Perforated sleeve UPM SH K	12x50		12x85		16x85			16x130		20x85			20x130		20x200	

Group factors	$\alpha_{g,N}$ (s_{min} ∥)	[-]	1,3
	$\alpha_{g,V}$ (s_{min} ∥)	[-]	1,3
	$\alpha_{g,N}$ (s_{min} ⊥)	[-]	0,8
	$\alpha_{g,V}$ (s_{min} ⊥)	[-]	1,3

Upat injection system UPM 33 for masonry

Performance
Vertical perforated brick HLz, Porotherm W 44, filled with mineral wool; dimensions, installation parameters, Group factors

Annex C31

Vertical perforated brick HLz, Porotherm W 44, filled with mineral wool, EN 771-1:2011+A1:2015

Table C32.1: Characteristic resistance to pull-out failure or brick breakout failure of a single anchor under tension loading

Anchor rod		**M6**	**M8**	**M6**	**M8**	**-**	**M8**	**M10**	**M8**	**M10**	**-**	**M12**	**M16**	**M12**	**M16**	**M12**	**M16**
Internal threaded anchor UPM-I		-		-		**M6 M8** **11x85**	-		-		**M10 M12** **15x85**	-		-		-	
Perforated sleeve UPM SH K		**12x50**		**12x85**		**16x85**			**16x130**		**20x85**			**20x130**		**20x200**	
$N_{Rk} = N_{Rk,p} = N_{Rk,b} = N_{Rk,p,c} = N_{Rk,b,c}$ [kN]; temperature range 50/80°C [2)]																	
Mean compressive strength / Min. compressive strength single brick [1)]	Use con-ditions																
8 / 6 N/mm²	w/w w/d	0,75		1,50		1,20			1,50							2,50	
	d/d	0,90		1,50		1,20			1,50							2,50	
10 / 8 N/mm²	w/w w/d	0,90		1,50		1,20			1,50							2,50	
	d/d	0,90		2,00		1,50			2,00							3,00	
12,5 / 10 N/mm²	w/w w/d	0,90		2,00		1,50			2,00							3,00	
	d/d	1,20		2,00		1,50			2,00							3,50	

[1)] The minimum compressive strength of the single brick must not be less than 80% of the mean compressive strength.
[2)] For temperature range 72/120°C: $N_{Rk\,(72/120°C)} = 0{,}83 \cdot N_{Rk\,(50/80°C)}$.

Table C32.2: Characteristic resistance to local brick failure or brick edge failure of a single anchor under shear loading

Anchor rod		**M6**	**M8**	**M6**	**M8**	**-**	**M8**	**M10**	**M8**	**M10**	**-**	**M12**	**M16**	**M12**	**M16**	**M12**	**M16**
Internal threaded anchor UPM-I		-		-		**M6 M8** **11x85**	-		-		**M10 M12** **15x85**	-		-		-	
Perforated sleeve UPM SH K		**12x50**		**12x85**		**16x85**			**16x130**		**20x85**			**20x130**		**20x200**	
$V_{Rk} = V_{Rk,b} = V_{Rk,c,II} = V_{Rk,c,\perp}$ [kN]; temperature range 50/80°C and 72/120°C																	
Mean compressive strength / Min. compressive strength single brick [1)]	Use con-ditions																
8 / 6 N/mm²	w/w w/d d/d	0,9							1,2		0,9			1,2		1,2	
10 / 8 N/mm²	w/w w/d d/d	0,9							1,5		0,9			1,5		1,2	
12,5 / 10 N/mm²	w/w w/d d/d	1,2							1,5		1,2			1,5		1,5	

[1)] The minimum compressive strength of the single brick must not be less than 80% of the mean compressive strength.

Factor for job site tests and displacements see annex C44

Upat injection system UPM 33 for masonry

Performance
Vertical perforated brick HLz, Porotherm W 44, filled with mineral wool,
Characteristic resistance under tension loading and shear loading

Annex C32

Vertical perforated brick HLz filled with mineral wool, EN 771-1:2011+A1:2015

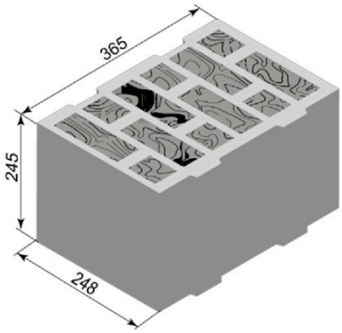

Producer		e.g. Wienerberger		
Nominal dimensions	[mm]	length L	width W	height H
		≥ 365	≥ 248	≥ 245
Mean gross dry density ρ	[kg/dm³]	0,6		
Mean compressive strength / Min. compressive strength single brick [1)]	[N/mm²]	10 / 8		
Standard or annex		EN 771-1:2011+A1:2015		

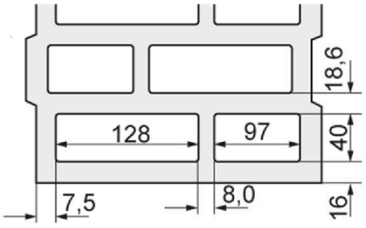

Dimension see also Annex B12

Table C33.1: Installation parameters
(installation with perforated sleeve UPM SH K)

Anchor rod	**M6**	**M8**	**-**	**M8**	**M10**	**M8**	**M10**	**-**	**M12**	**M16**	**M12**	**M16**
Internal threaded anchor UPM-I	**-**		**M6 / M8**	**-**		**-**		**M10 / M12**	**-**		**-**	
			11x85					**15x85**				
Perforated sleeve UPM SH K	**12x85**		**16x85**			**16x130**		**20x85**			**20x130**	

Anchor rod and internal threaded anchor UPM-I with perforated sleeve UPM SH K			
Max. installation torque	max T_{inst}	[Nm]	2 / 4
General installation parameters			
Edge distance	$c_{min} = c_{cr}$	[mm]	100
Spacing	s_{min} ∥	[mm]	250
	s_{cr} ∥	[mm]	250
	s_{min} ⊥	[mm]	245
	s_{cr} ⊥	[mm]	245
Drilling method			
Hammer drilling with hard metal hammer drill			

[1)] The minimum compressive strength of the single brick must not be less than 80% of the mean compressive strength.

Table C33.2: Group factors

Anchor rod	**M6**	**M8**	**M8**	**M10**	**M8**	**M10**	**M12**	**M16**	**M12**	**M16**
Perforated sleeve UPM SH K	**12x85**		**16x85**		**16x130**		**20x85**		**20x130**	

Group factors	$\alpha_{g,N}$ (s_{min} ∥) = $\alpha_{g,V}$ (s_{min} ∥)	[-]	2
	$\alpha_{g,N}$ (s_{min} ⊥) = $\alpha_{g,V}$ (s_{min} ⊥)	[-]	2

Upat injection system UPM 33 for masonry

Performance
Vertical perforated brick HLz filled with mineral wool, dimensions, installation parameters, Group factors

Annex C33

Vertical perforated brick HLz filled with mineral wool, EN 771-1:2011+A1:2015

Table C34.1: Characteristic resistance to pull-out failure or brick breakout failure of a single anchor under tension loading

Anchor rod	**M6**	**M8**	**-**	**M8**	**M10**	**M8**	**M10**	**-**	**M12**	**M16**	**M12**	**M16**	**M12**	**M16**
Internal threaded anchor UPM-I	-		**M6** / **11x85**	**M8**	-	-		**M10** / **15x85**	**M12**	-	-		-	
Perforated sleeve UPM SH K	**12x85**		**16x85**			**16x130**		**20x85**			**20x130**		**20x200**	
$N_{Rk} = N_{Rk,p} = N_{Rk,b} = N_{Rk,p,c} = N_{Rk,b,c}$ [kN]; temperature range 50/80°C [2)]														
Mean compressive strength / Min. compressive strength single brick [1)]	Use con-ditions													
10 / 8 N/mm²	w/w	2,0		1,5	2,5			2,0			2,0		3,0	
	d/d	2,0		2,0	3,0			2,0			2,0		3,0	

[1)] The minimum compressive strength of the single brick must not be less than 80% of the mean compressive strength.
[2)] For temperature range 72/120°C no performance assessed.

Table C34.2: Characteristic resistance to local brick failure or brick edge failure of a single anchor under shear loading

Anchor rod	**M6**	**M8**	**-**	**M8**	**M10**	**M8**	**M10**	**-**	**M12**	**M16**	**M12**	**M16**	**M12**	**M16**
Internal threaded anchor UPM-I	-		**M6** / **11x85**	**M8**	-	-		**M10** / **15x85**	**M12**	-	-		-	
Perforated sleeve UPM SH K	**12x85**		**16x85**			**16x130**		**20x85**			**20x130**		**20x200**	
$V_{Rk} = V_{Rk,b} = V_{Rk,c,II} = V_{Rk,c,\perp}$ [kN]; temperature range 50/80°C [2)]														
Mean compressive strength / Min. compressive strength single brick [1)]	Use con-ditions													
10 / 8 N/mm²	w/w	2,5	3,0	3,0			3,0		1,5			1,5	1,5	1,5
	d/d	2,5	3,0	3,0			3,0		1,5			1,5	1,5	1,5

[1)] The minimum compressive strength of the single brick must not be less than 80% of the mean compressive strength.
[2)] For temperature range 72/120°C no performance assessed.

Factor for job site tests and displacements see annex C44

Upat injection system UPM 33 for masonry

Performance
Vertical perforated brick HLz filled with mineral wool, Characteristic resistance under tension loading and shear loading

Annex C34

Vertical perforated brick HLz, EN 771-1:2011+A1:2015

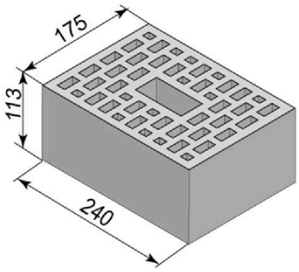

Producer		e.g. Wienerberger		
Nominal dimensions	[mm]	length L	width W	height H
		≥ 240	≥ 175	≥ 113
Mean gross dry density ρ	[kg/dm³]	0,9		
Mean compressive strength / Min. compressive strength single brick [1)]	[N/mm²]	12,5 / 10		
Standard or annex		EN 771-1:2011+A1:2015		

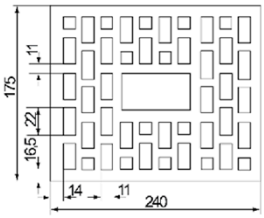

Dimension see also Annex B12

Table C35.1: Installation parameters
(installation with perforated sleeve UPM SH K)

Anchor rod	**M6**	**M8**	**-**		**M8**	**M10**	**M8**	**M10**	**-**		**M12**	**M16**	**M12**	**M16**
Internal threaded anchor UPM-I	**-**		**M6**	**M8**	**-**		**-**		**M10**	**M12**	**-**		**-**	
			11x85						**15x85**					
Perforated sleeve UPM SH K	**12x85**		**16x85**				**16x130**		**20x85**				**20x130**	
Anchor rod and internal threaded anchor UPM-I with perforated sleeve UPM SH K														
Max. installation torque max T_{inst}	[Nm]	2	4											
General installation parameters														
Edge distance $c_{min} = c_{cr}$	[mm]	100												
Spacing s_{min} ∥ / s_{cr} ∥	[mm]	240												
Spacing s_{min} ⊥ / s_{cr} ⊥	[mm]	115												
Drilling method														
Hammer drilling with hard metal hammer drill														

[1)] The minimum compressive strength of the single brick must not be less than 80% of the mean compressive strength.

Table C35.2: Group factors

Anchor rod	**M6**	**M8**	**M8**	**M10**	**M8**	**M10**	**M12**	**M16**	**M12**	**M16**
Perforated sleeve UPM SH K	**12x85**		**16x85**		**16x130**		**20x85**		**20x130**	
Group factors $\alpha_{g,N}$ (s_{min} ∥) = $\alpha_{g,V}$ (s_{min} ∥) / $\alpha_{g,N}$ (s_{min} ⊥) = $\alpha_{g,V}$ (s_{min} ⊥) [-]	2									

Upat injection system UPM 33 for masonry

Performance
Vertical perforated brick HLz, dimensions, installation parameters, Group factors

Annex C35

Vertical perforated brick HLz, EN 771-1:2011+A1:2015

Table C36.1: Characteristic resistance to pull-out failure or brick breakout failure of a single anchor under tension loading

Anchor rod	**M6**	**M8**	**-**	**M8**	**M10**	**M8**	**M10**	**-**	**M12**	**M16**	**M12**	**M16**
Internal threaded anchor UPM-I	**-**		**M6 / M8**	**-**		**-**		**M10 / M12**	**-**		**-**	
			11x85					**15x85**				
Perforated sleeve UPM SH K	**12x85**		**16x85**			**16x130**		**20x85**			**20x130**	
$N_{Rk} = N_{Rk,p} = N_{Rk,b} = N_{Rk,p,c} = N_{Rk,b,c}$ [kN]; temperature range 50/80°C [2)]												
Mean compressive strength/ Min. compressive strength single brick [1)]	Use con-ditions											
12,5 / 10 N/mm²	w/w	3,5		4,0		4,5		4,5			4,0	
	d/d	4		4,5		5,0		5,0			4,0	

[1)] The minimum compressive strength of the single brick must not be less than 80% of the mean compressive strength.
[2)] For temperature range 72/120°C no performance assessed.

Table C36.2: Characteristic resistance to local brick failure or brick edge failure of a single anchor under shear loading

Anchor rod	**M6**	**M8**	**-**		**M8**	**M10**	**M8**	**M10**	**-**		**M12**	**M16**	**M12**	**M16**
Internal threaded anchor UPM-I	**-**		**M6**	**M8**	**-**		**-**		**M10**	**M12**	**-**		**-**	
			11x85						**15x85**					
Perforated sleeve UPM SH K	**12x85**		**16x85**				**16x130**		**20x85**				**20x130**	
$V_{Rk} = V_{Rk,b} = V_{Rk,c,II} = V_{Rk,c,\perp}$ [kN]; temperature range 50/80°C [2)]														
Mean compressive strength / Min. compressive strength single brick [1)]	Use con-ditions													
12,5 / 10 N/mm²	w/w	4,0	5,5	4,0	5,5	5,5	7,0	5,5	7,0	7,0	6,0	6,0	8,0	6,0	8,0
	d/d	4,0	5,5	4,0	5,5	5,5	7,0	5,5	7,0	7,0	6,0	6,0	8,0	6,0	8,0

[1)] The minimum compressive strength of the single brick must not be less than 80% of the mean compressive strength.
[2)] For temperature range 72/120°C no performance assessed.

Factor for job site tests and displacements see annex C44

Horizontal perforated brick LLz, EN 771-1:2011+A1:2015

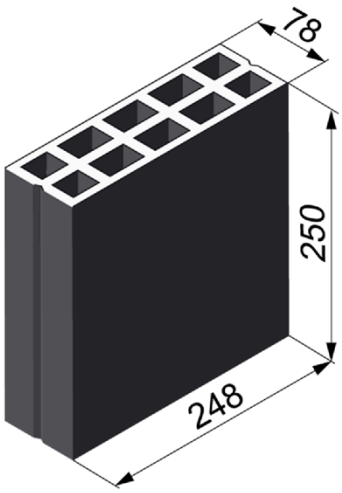

Producer		-		
Nominal dimensions	[mm]	length L	width W	height H
		250	78	248
Mean gross dry density ρ	[kg/dm³]	≥ 0,7		
Mean compressive strength / Min. compressive strength single brick [1)]	[N/mm²]	2,5 / 2 or 5 / 4 or 8 / 6		
Standard or annex		EN 771-1:2011+A1:2015		

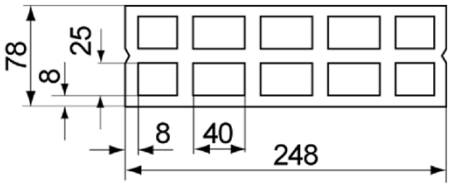

Dimension see also Annex B13

Table C37.1: Installation parameters

Anchor rod			**M6**	**M8**
Perforated sleeve UPM SH K			**12x50**	
Anchor rod with perforated sleeve UPM SH K				
Max. installation torque	max T_{inst}	[Nm]	2	
General installation parameters				
Edge distance	$c_{min} = c_{cr}$	[mm]	100	
Spacing	s_{min} ∥	[mm]	75	
	s_{cr} ∥	[mm]	250	
	s_{min} ⊥ = s_{cr} ⊥	[mm]	250	
Drilling method				
Hammer drilling with hard metal hammer drill				

[1)] The minimum compressive strength of the single brick must not be less than 80% of the mean compressive strength.

Table C37.2: Group factors

Anchor rod			**M6**	**M8**
Perforated sleeve UPM SH K			**12x50**	
Group factors	$\alpha_{g,N}$ (s_{min} ∥)	[-]	1,6	
	$\alpha_{g,V}$ (s_{min} ∥)	[-]	1,1	
	$\alpha_{g,N}$ (s_{min} ⊥)	[-]	2,0	
	$\alpha_{g,V}$ (s_{min} ⊥)	[-]		

Upat injection system UPM 33 for masonry

Performance
Horizontal perforated brick LLz, dimensions, installation parameters, Group factors

Annex C37

Horizontal perforated brick LLz, EN 771-1:2011+A1:2015

Table C38.1: Characteristic resistance to pull-out failure or brick breakout failure of a single anchor under tension loading

Anchor rod		**M6**	**M8**
Perforated sleeve UPM SH K		**12x50**	
$N_{Rk} = N_{Rk,p} = N_{Rk,b} = N_{Rk,p,c} = N_{Rk,b,c}$ [kN]; temperature range 50/80°C [2)]			
Mean compressive strength / Min. compressive strength single brick [1)]	Use con-ditions		
2,5 / 2 N/mm²	w/w w/d	0,5	
	d/d	0,6	
5 / 4 N/mm²	w/w w/d	0,9	
	d/d	1,2	
8 / 6 N/mm²	w/w w/d	1,5	
	d/d	1,5	

[1)] The minimum compressive strength of the single brick must not be less than 80% of the mean compressive strength..
[2)] For temperature range 72/120°C: $N_{Rk\,(72/120°C)} = 0{,}83 \cdot N_{Rk\,(50/80°C)}$.

Table C38.2: Characteristic resistance to local brick failure or brick edge failure of a single anchor under shear loading

Anchor rod		**M6**	**M8**
Perforated sleeve UPM SH K		**12x50**	
$V_{Rk} = V_{Rk,b} = V_{Rk,c,II} = V_{Rk,c,\perp}$ [kN]; temperature range 50/80°C and 72/120°C			
Mean compressive strength / Min. compressive strength single brick [1)]	Use con-ditions		
2,5 / 2 N/mm²	w/w w/d	0,5	
	d/d		
5 / 4 N/mm²	w/w w/d	0,9	
	d/d		
8 / 6 N/mm²	w/w w/d	1,5	
	d/d		

[1)] The minimum compressive strength of the single brick must not be less than 80% of the mean compressive strength.

Factor for job site tests and displacements see annex C44.

Upat injection system UPM 33 for masonry	**Annex C38**
Performance Horizontal perforated brick LLz, Characteristic resistance under tension and shear loading	

Light-weight concrete hollow block Hbl, EN 771-3:2011+A1:2015

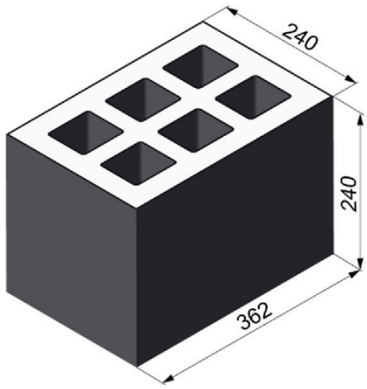

Producer		-		
Nominal dimensions	[mm]	length L	width W	height H
		362	240	240
Mean gross dry density ρ	[kg/dm³]	≥ 1,0		
Mean compressive strength / Min. compressive strength single brick [1)]	[N/mm²]	2,5 / 2 or 5 / 4		
Standard or annex		EN 771-3:2011+A1:2015		

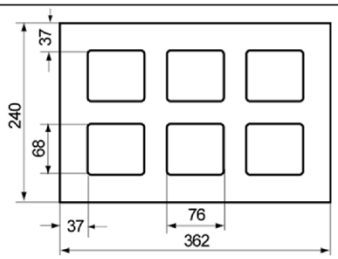

Dimension see also Annex B13

Table C39.1: Installation parameters (with perforated sleeve UPM SH K)

Anchor rod		**M6**	**M8**	**M6**	**M8**	**-**		**M8**	**M10**	**M8**	**M10**	**-**		**M12**	**M16**	**M12**	**M16**	**M12**	**M16**
Internal threaded anchor UPM-I		-		-		**M6**	**M8**	-		-		**M10**	**M12**	-		-		-	
						11x85						**15x85**							
Perforated sleeve UPM SH K		**12x50**		**12x85**		**16x85**				**16x130**		**20x85**				**20x130**		**20x200**	
Anchor rod and internal threaded anchor UPM-I with perforated sleeve UPM SH K																			
Max. installation torque	max T_{inst}	[Nm]	2																
General installation parameters																			
Edge distance	$c_{min} = c_{cr}$	[mm]	60																
Spacing	s_{min} ∥	[mm]	100																
	s_{cr} ∥	[mm]	362																
	s_{min} ⊥ = s_{cr} ⊥	[mm]	240																
Drilling method																			
Hammer drilling with hard metal hammer drill																			

[1)] The minimum compressive strength of the single brick must not be less than 80% of the mean compressive strength.

Table C39.2: Group factors

Anchor rod		**M6**	**M8**	**M6**	**M8**	**-**		**M8**	**M10**	**M8**	**M10**	**-**		**M12**	**M16**	**M12**	**M16**	**M12**	**M16**
Internal threaded anchor UPM-I		-		-		**M6**	**M8**	-		-		**M10**	**M12**	-		-		-	
						11x85						**15x85**							
Perforated sleeve UPM SH K		**12x50**		**12x85**		**16x85**				**16x130**		**20x85**				**20x130**		**20x200**	
Group factors	$\alpha_{g,N}$ (s_{min} ∥)	[-]	1,2																
	$\alpha_{g,V}$ (s_{min} ∥)	[-]	1,1																
	$\alpha_{g,N}$ (s_{min} ⊥)	[-]	2,0																
	$\alpha_{g,V}$ (s_{min} ⊥)	[-]																	

Upat injection system UPM 33 for masonry

Performance
Light-weight concrete hollow block Hbl, dimensions, installation parameters, Group factors

Annex C39

Light-weight concrete hollow block Hbl, EN 771-3:2011+A1:2015

Table C40.1: Characteristic resistance to pull-out failure or brick breakout failure of a single anchor under tension loading

Anchor rod	M6	M8	M6	M8	-	M8	M10	M8	M10	-	M12	M16	M12	M16	M12	M16
Internal threaded anchor UPM-I	-		-		M6 M8 / 11x85	-		-		M10 M12 / 15x85	-		-		-	
Perforated sleeve UPM SH K	12x50		12x85		16x85			16x130		20x85			20x130		20x200	

$N_{Rk} = N_{Rk,p} = N_{Rk,b} = N_{Rk,p,c} = N_{Rk,b,c}$ [kN]; temperature range 50/80°C [2)]				
Mean compressive strength / Min. compressive strength single brick [1)]	Use con-ditions			
2,5 / 2 N/mm²	w/w w/d	1,2	1,5	2,5
	d/d	1,2	1,5	2,5
5 / 4 N/mm²	w/w w/d	2,0	3,0	5,0
	d/d	2,5	3,0	5,5

[1)] The minimum compressive strength of the single brick must not be less than 80% of the mean compressive strength.
[2)] For temperature range 72/120°C: $N_{Rk\,(72/120°C)} = 0{,}83 \cdot N_{Rk\,(50/80°C)}$.

Table C40.1: Characteristic resistance to local brick failure or brick edge failure of a single anchor under shear loading

Anchor rod	M6	M8	M6	M8	-	M8	M10	M8	M10	-	M12	M16	M12	M16	M12	M16
Internal threaded anchor UPM-I	-		-		M6 M8 / 11x85	-		-		M10 M12 / 15x85	-		-		-	
Perforated sleeve UPM SH K	12x50		12x85		16x85			16x130		20x85			20x130		20x200	

$V_{Rk} = V_{Rk,b} = V_{Rk,c,II} = V_{Rk,c,\perp}$ [kN]; temperature range 50/80°C and 72/120°C		
Mean compressive strength / Min. compressive strength single brick [1)]	Use con-ditions	
2,5 / 2 N/mm²	w/w w/d	0,9
	d/d	
5 / 4 N/mm²	w/w w/d	2,0
	d/d	

[1)] The minimum compressive strength of the single brick must not be less than 80% of the mean compressive strength.

Factor for job site tests and displacements see annex C44

Upat injection system UPM 33 for masonry	**Annex C40**
Performance Light-weight concrete hollow block Hbl, Characteristic resistance under tension loading and shear loading	

Autoclaved aerated concrete, EN 771-4:2011+A1:2015

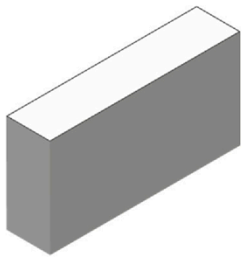

Producer		e.g. Ytong		
Mean gross dry density ρ	[kg/dm³]	0,35	0,5	0,65
Mean compressive strength / Min. compressive strength single brick [1)]	[N/mm²]	2,5 / 2	5 / 4	8 / 6
Standard or annex		EN 771-4:2011+A1:2015		

Table C41.1: Installation parameters

Anchor rod			**M6**		**M8**		**M10**		**M12**		**M16**		**-**		**-**	
Internal threaded anchor UPM-I			**-**		**-**		**-**		**-**		**-**		**M6**	**M8**	**M10**	**M12**
													11x85		**15x85**	
Anchor rod and internal threaded anchor UPM-I without perforated sleeve																
Effective anchorage depth	h_{ef}	[mm]	100	200	100	200	100	200	100	200	100	200	85			
Max. installation torque	max T_{inst}	[Nm]	1	4	1	8	2	12	2	16	2	20	1		2	
General installation parameters																
Edge distance	$c_{min} = c_{cr}$	[mm]	100													
Spacing	s_{cr} ∥ = s_{min} ∥	[mm]	250													
	h_{ef}=200mm s_{min} ∥	[mm]	80													
	h_{ef}=200mm s_{cr} ∥	[mm]	3x h_{ef}													
	s_{cr} ⊥ = s_{min} ⊥	[mm]	250													
	h_{ef}=200mm s_{min} ⊥		80													
	h_{ef}=200mm s_{cr} ⊥		3x h_{ef}													
Drilling method																
Hammer drilling with hard metal hammer drill																

[1)] The minimum compressive strength of the single brick must not be less than 80% of the mean compressive strength.

Upat injection system UPM 33 for masonry

Performance
Autoclaved aerated concrete (cylindrical drill hole), dimensions, installation parameters

Annex C41

Autoclaved aerated concrete, EN 771-4:2011+A1:2015

Table C42.1: Group factors for autoclaved aerated concrete (Min. compressive strength single brick = 2 N/mm²)

Anchor rod			M6	M8	M10	M12	M16	-		-	
Internal threaded anchor UPM-I			-	-	-	-	-	M6	M8	M10	M12
								11x85		15x85	
Group factors	h_{ef}=200 $\alpha_{g,N}$ (s_{min} II)	[-]	1,6					-[1]		-[1]	
	h_{ef}=200 $\alpha_{g,V}$ (s_{min} II)		1,1					-[1]		-[1]	
	$\alpha_{g,N}$ II, $\alpha_{g,V}$ (s_{min} II)		2,0								
	h_{ef}=200 $\alpha_{g,N}$ (s_{min} ⊥)		1,6					-[1]		-[1]	
	h_{ef}=200 $\alpha_{g,V}$ (s_{min} ⊥)		0,8					-[1]		-[1]	
	$\alpha_{g,N}$ ⊥, $\alpha_{g,V}$ (s_{min} ⊥)		2,0								

[1] No performance assessed.

Table C42.2: Group factors for autoclaved aerated concrete (Min. compressive strength single brick = 4 N/mm²)

Anchor rod			M6	M8	M10	M12	M16	-		-	
Internal threaded anchor UPM-I			-	-	-	-	-	M6	M8	M10	M12
								11x85		15x85	
Group factors	h_{ef}=200 $\alpha_{g,N}$ (s_{min} II)	[-]	0,7					-[1]		-[1]	
	h_{ef}=200 α_{gV} (s_{min} II)		2,0					-[1]		-[1]	
	$\alpha_{g,N}$ II, α_{gV} (s_{min} II)		2,0								
	h_{ef}=200 $\alpha_{g,N}$ (s_{min} ⊥)		0,7					-[1]		-[1]	
	h_{ef}=200 $\alpha_{g,V}$ (s_{min} ⊥)		1,2					-[1]		-[1]	
	$\alpha_{g,N}$ ⊥, α_{gV} (s_{min} ⊥)		2,0								

[1] No performance assessed.

Table C42.3: Group factors for autoclaved aerated concrete (Min. compressive strength single brick = 6 N/mm²)

Anchor rod			M6	M8	M10	M12	M16	-		-	
Internal threaded anchor UPM-I			-	-	-	-	-	M6	M8	M10	M12
								11x85		15x85	
Group factors	h_{ef}=200 $\alpha_{g,N}$ (s_{min} II)	[-]	0,7					-[1]		-[1]	
	h_{ef}=200 $\alpha_{g,V}$ (s_{min} II)		2,0					-[1]		-[1]	
	$\alpha_{g,N}$ II, $\alpha_{g,V}$ (s_{min} II)		2,0								
	h_{ef}=200 $\alpha_{g,N}$ (s_{min} ⊥)		0,7					-[1]		-[1]	
	h_{ef}=200 $\alpha_{g,V}$ (s_{min} ⊥)		1,2					-[1]		-[1]	
	$\alpha_{g,N}$ ⊥, $\alpha_{g,V}$ (s_{min} ⊥)		2,0								

[1] No performance assessed.

Upat injection system UPM 33 for masonry

Performance
Autoclaved aerated concrete, Group factors

Annex C42

Autoclaved aerated concrete, EN 771-4:2011+A1:2015

Table C43.1: Characteristic resistance to pull-out failure or brick breakout failure of a single anchor under tension loading

Anchor rod		**M6**		**M8**		**M10**		**M12**		**M16**		**-**		**-**	
Internal threaded anchor UPM-I		**-**		**-**		**-**		**-**		**-**		**M6** / **M8**		**M10** / **M12**	
												11x85		**15x85**	
$N_{Rk} = N_{Rk,p} = N_{Rk,b} = N_{Rk,p,c} = N_{Rk,b,c}$ [kN]; temperature range 50/80°C [3)]															
Mean compressive strength / Min. compressive strength single brick [2)]	Use con-ditions	Effective anchorage depth h_{ef} [mm]													
		100	200	100	200	100	200	100	200	100	200	85			
2,5 / 2 N/mm²	w/w w/d	1,2	1,2	1,5	2,0	1,5	3,0	1,5	3,0	2,0	3,0	1,5		1,5	
	d/d	1,5	3,0	1,5	3,0	1,5	3,5	2,0	4,0	2,0	4,0	1,5		1,5	
5 / 4 N/mm²	w/w w/d	1,2	-[1)]	2,0	1,5	2,5	3,5	2,5	3,5	2,0	3,5	2,0		1,5	
	d/d	1,5	-[1)]	2,0	3,0	3,0	5,0	2,5	5,0	2,0	5,0	2,0		1,5	
8 / 6 N/mm²	w/w w/d	1,5	-[1)]	3,0	2,5	4,5	5,0	4,5	7,0	3,0	8,5	3,5		2,5	
	d/d	1,5	-[1)]	3,5	4,0	5,0	7,0	5,0	9,0	3,0	11,5	3,5		2,5	

[1)] No performance assessed.
[2)] The minimum compressive strength of the single brick must not be less than 80% of the mean compressive strength.
[3)] For temperature range 72/120°C: $N_{Rk\,(72/120°C)} = 0{,}83 \cdot N_{Rk\,(50/80°C)}$.

Table C43.2: Characteristic resistance to local brick failure or brick edge failure of a single anchor under shear loading

Anchor rod		**M6**		**M8**		**M10**		**M12**		**M16**		**-**		**-**	
Internal threaded anchor UPM-I		**-**		**-**		**-**		**-**		**-**		**M6** / **M8**		**M10** / **M12**	
												11x85		**15x85**	
$V_{Rk} = V_{Rk,b} = V_{Rk,c,II} = V_{Rk,c,\perp}$ [kN]; temperature range 50/80°C and 72/120°C															
Mean compressive strength / Min. compressive strength single brick [2)]	Use con-ditions	Effective anchorage depth h_{ef} [mm]													
		100	200	100	200	100	200	100	200	100	200	85			
2,5 / 2 N/mm²	w/w w/d d/d	1,2	1,2	1,2	1,2	1,2	1,2	1,5	1,2	1,2	1,2	1,2		1,5	
5 / 4 N/mm²	w/w w/d d/d	2,0	-[1)]	2,5	2,0	2,0	2,0	2,5	2,0	2,0	2,0	2,0		2,5	
8 / 6 N/mm²	w/w w/d d/d	2,5	-[1)]	3,0	2,5	3,0	3,0	3,5	4,0	4,5	4,5	2,5		3,5	

[1)] No performance assessed.
[2)] The minimum compressive strength of the single brick must not be less than 80% of the mean compressive strength

Factor for job site tests and displacements see annex C44.

Upat injection system UPM 33 for masonry

Performance
Autoclaved aerated concrete,
Characteristic resistance under tension and shear loading

Annex C43

β-factors for job site tests; displacements

Table C44.1: β-factors for job site tests

use conditions		w/w and w/d		d/d	
temperature range [°C]		50/80	72/120	50/80	72/120
Material	Size	β-factors			
solid units	M6	0,55	0,46	0,96	0,80
	M8	0,57	0,51		
	M10	0,59	0,52		
	M12 UPM-I 11x85	0,60	0,54		
	M16 UPM-I 15x85	0,62	0,52		
	UPM SH 16x85 K	0,55	0,46		
hollow units	all sizes	0,86	0,72	0,96	0,80
Autoclaved aerated concrete cylindrical drill hole	all sizes	0,73	0,73	0,81	0,81

Table C44.2: Displacements

Material	N [kN]	δN_0 [mm]	δN_∞ [mm]	V [kN]	δV_0 [mm]	δV_∞ [mm]
solid units and autoclaved aerated concrete h_{ef}=100mm	$\frac{N_{Rk}}{1,4 * \gamma_{Mm}}$	0,03	0,06	$\frac{V_{Rk}}{1,4 * \gamma_{Mm}}$	0,82	0,88
hollow units	$\frac{N_{Rk}}{1,4 * \gamma_{Mm}}$	0,48	0,06	$\frac{V_{Rk}}{1,4 * \gamma_{Mm}}$	1,71	2,56
solid brick Mz NF Annex C4 - C7	$\frac{N_{Rk}}{1,4 * \gamma_{Mm}}$	0,74	1,48	$\frac{V_{Rk}}{1,4 * \gamma_{Mm}}$	1,23	1,85
solid brick KS NF Annex C12 / C13	$\frac{N_{Rk}}{1,4 * \gamma_{Mm}}$	0,20	0,40	$\frac{V_{Rk}}{1,4 * \gamma_{Mm}}$	0,91	1,37
AAC h_{ef}=200 mm Annex C41 – C43	$\frac{N_{Rk}}{1,4 * \gamma_{Mm}}$	1,03	2,06	$\frac{V_{Rk}}{1,4 * \gamma_{Mm}}$	1,25	1,88

For anchorage in autoclaved aerated concrete (AAC), the partial factor γ_{MAAC} shall be used instead of γ_{Mm}.

Upat injection system UPM 33 for masonry

Performance
β-factors for job site tests; displacements

Annex C44