# PRESTANDADEKLARATION

## DoP 0376

för fischer ankarkanal FES med fischer kanalbult FBC (ankarkanaler för användning i betong). SV

1. Produkttypens unika identifikationskod: **DoP 0376**

2. Avsedd användning/avsedda användningar: **Ankarkanaler för användning i sprucken eller icke-sprucken betong, se bilaga, särskilt bilagor B1- B8.**

3. Tillverkare: **fischerwerke GmbH & Co. KG, Klaus-Fischer-Str. 1, 72178 Waldachtal, Tyskland**

4. Tillverkarens representant: **–**

5. System för bedömning och fortlöpande kontroll av prestanda: **1**

6. Europeiskt bedömningsdokument: **EAD 330008-04-0601, Edition 07/2024**
   Europeisk teknisk bedömning: **ETA-18/0862; 2025-05-19**
   Tekniskt bedömningsorgan: **DIBt- Deutsches Institut für Bautechnik**
   Anmält/anmälda organ: **2873 TU Darmstadt**

7. Angiven prestanda:
   **Mekanisk hållfasthet och stabilitet (BWR 1)**
   **Karakteristisk bärförmåga för spänning (för statisk och kvasi-statisk belastning):**
   1) Stålets motståndskraft: Bilagor C1
   2) Motståndskaft mot att stålet sviker i anslutning mellan ankare och skena: Bilagor C1
   3) Motstånd mot att stålet i skenans räls sviker och att skenbulten därefter dras ut: Bilagor C1
   4) Motstånd mot att stålet i skenbulten sviker: Bilagor C10
   5) Motstånd mot att stålet sviker genom att skenan böjs för mycket: Bilagor A5, C2
   6) Maimal vridkraft vid installation för att undvika skador: Bilagor B4
   7) Motstånd mot att ankaret fläks: Bilagor C3,C4
   8) Motstånd i betongkonen: Bilagor B3, C3, C4
   9) Minsta kantavstånd, inbördes avstånd, fixturtjocklek för att förebygga sprickor i betong under installation: Bilagor A5, B3
   10) Karaktäristiskt kantavstånd och inbördes Avstånd för att motverka att betongen spricker under last: Bilagor C3, C4
   11) Motstånd mot misslyckande i den bärande delen av huvudet: Bilagor A4

   **Karakteristisk bärförmåga för skjuvning (för statisk och kvasi-statisk belastning):**
   12) Motstånd mot skador i stålet i ankarbulten under tvärlast utan hävarm: Bilagor C10
   13) Motstånd mot skador i stålet genom att bulten bänds ur kanalen under tvärlast med hävarm: Bilagor C11
   14) Motstånd mot skador i stålet i kanalens skenor, och skador i anslutningen mellen ankaret och kanalen (tvärlaster i tvärgående riktning): Bilagor C6, C7
   15) Motstånd mot skador i stålet i kanalens skenor, och skador i anslutningen mellen ankaret och kanalen (tvärlaster i längsgående riktning): Bilaga C8
   16) Faktor för känslighet under installationen (Längsglidning): Bilaga C8
   17) Motstånd mot skador i stålet på ankaret (Längsglidning): Bilagor C6, C7
   18) Motstånd mot skador i stålet i ankarkanalen (tvärlaster i längsgående riktning): Bilagor C6, C7
   19) Motstån mot fläkning: Bilaga C8
   20) Mostånd mot skador i betong: Bilagor C8

   **Karakteristisk beständighet mot kombinerade statiska och kvasistatiska drag- och skjuvbelastningar**
   21) Motstånd mot skador i stålet i ankarkanalen: Bilagor C9

   **Karaktäristiskt motstånd under spänningsbelastning:**
   22) Utmattningshållfasthet mot stålbrott i hela systemet (kontinuerlig eller tri-lineär funktion,Bedömningsmetod A1, A2): NPD
   23) Utmattningsgräns för hela systemets motståndskraft mot stålbrott (Bedömningsmetod B): NPD
   24) Utmattningshållfasthet mot stålbrott i hela systemet (Linjäriserad funktion,Bedömningsmetod C): NPD
   25) Utmattningshållfasthet mot betongrelaterade brott (exponentiell funktion, Bedömningsmetod A1, A2): NPD
   26) Utmattningsgräns motstånd mot betongrelaterade brott (Bedömningsmetod B): NPD
   27) Utmattningshållfasthet mot betongrelaterade brott (Linjäriserad funktion, Bedömningsmetod C): NPD

   **Karakteristiskt motstånd vid seismisk belastning (seismisk prestandakategori C1)**
   28) Motstånd mot stålfel vid seismisk dragbelastning (seismisk prestandakategori C1): Bilagor C12, C14
   29) Motstånd mot stålfel vid seismisk skjuvbelastning för tvärkraftsbelastning i tvärriktning (seismisk prestandakategori C1): Bilagor C13, C14
   30) Motstånd mot stålfel vid seismisk skjuvbelastning för tvärkraftsbelastning i kanalens längdriktning (seismisk prestandakategori C1): Bilaga C13

**Karakteristiskt motstånd vid statisk och kvasi-statisk drag- och/eller skjuvbelastning**

31) Förskjutningar: Bilagor C5, C9

**Säkerhet vid brand (BWR 2)**

32) Reaktion vid brand: Klass (A1)
33) Motståndskraft mot eld: Bilagor C15, C16

**Hållbarhet:**

34) Hållbarhet: Bilagor A7, B1

8. Lämplig teknisk dokumentation och/eller särskild teknisk dokumentation: --

Prestandan för ovanstående produkt överensstämmer med den angivna prestandan. Denna prestandadeklaration har utfärdats i enlighet med förordning (EU) nr 305/2011 på eget ansvar av den tillverkare som anges ovan.

Undertecknad på tillverkarens vägnar av:

Dr. Ronald Mihala, Verkställande direktör Forskning och Utveckling

Dieter Pfaff, Chef för Internationella Produktionsfederationen och Kvalitetsledning

Tumlingen, 2025-06-02

Denna DoP har förberetts på olika språk. I händelse av tvist om tolkningen ska den engelska versionen alltid råda.

Bilagan innehåller frivilliga och kompletterande information på engelska som överskrider (det specifika språkets) lagkrav.

Translation guidance Essential Characteristics and Performance Parameters for Annexes

**Översättningsråd Grundläggande karaktäristik och prestandaparametrar för Annex**

| | | |
|---|---|---|
| Mechanical resistance and stability (BWR 1)<br>**Mekanisk hållfasthet och stabilitet (BWR 1)** | | |
| Characteristic resistance to tension load (static and quasi-static loading):<br>**Karakteristisk bärförmåga för spänning (för statisk och kvasi-statisk belastning):** | | |
| 1 | Resistance to steel failure of anchors:<br>**Stålets motståndskraft:** | $N_{Rk,s,a}$ |
| 2 | Resistance to steel failure of the connection between anchors and channel:<br>**Motståndskaft mot att stålet sviker i anslutning mellan ankare och skena:** | $N_{Rk,s,c}$ |
| 3 | Resistance to steel failure of channel lips and sunsequently pullout of channel bolt:<br>**Motstånd mot att stålet i skenans räls sviker och att skenbulten därefter dras ut:** | $N^0_{Rk,s,l}$; $s_{l,N}$ |
| 4 | Resistance to steel failure of channel bolt:<br>**Motstånd mot att stålet i skenbulten sviker:** | $N_{Rk,s}$ |
| 5 | Resistance to steel failure by exceeding the bending strength of the channel:<br>**Motstånd mot att stålet sviker genom att skenan böjs för mycket:** | $M_{Rk,s,flex}$; $s_{max}$ |
| 6 | Maximum installation torque moment to avoid damage during installation:<br>**Maimal vridkraft vid installation för att undvika skador:** | $T_{inst,g}$; ($T_{inst,s}$) |
| 7 | Resistance to pull-out failure of the anchor:<br>**Motstånd mot att ankaret fläks:** | $N_{Rk,p}$ |
| 8 | Resistance to concrete cone failure:<br>**Motstånd i betongkonen:** | $k_{cr,N}$; $k_{ucr,N}$; $h_{ef}$ |
| 9 | Minimum edge distance, spacing, member thickness to prevent concrete splitting during installation:<br>**Minsta kantavstånd, inbördes avstånd, fixturtjocklek för att förebygga sprickor i betong under installation:** | $s_{min;}$ $c_{min;}$ $h_{min}$ |
| 10 | Characteristic edge distance and spacing to avoid splitting of concrete under load:<br>**Karaktäristiskt kantavstånd och inbördes Avstånd för att motverka att betongen spricker under last:** | $s_{cr,sp}$; $c_{cr,sp}$ |
| 11 | Resistance to blowout failure- bearing area of head:<br>**Motstånd mot misslyckande i den bärande delen av huvudet:** | $A_h$ |
| Characteristic resistance to shear load (static and quasi-static loading):<br>**Karakteristisk bärförmåga för skjuvning (för statisk och kvasi-statisk belastning):** | | |
| 12 | Resistance to steel failure of channel bolt under shear loading without lever arm:<br>**Motstånd mot skador i stålet i ankarbulten under tvärlast utan hävarm:** | $V_{Rk,s}$ |
| 13 | Resistance to steel failure by bending of the channel bolt under shear load with lever arm:<br>**Motstånd mot skador i stålet genom att bulten bänds ur kanalen under tvärlast med hävarm:** | $M^0_{Rk,s}$ |
| 14 | Resistance to steel failure of channel lips, steel failure of connection between anchor and channel or steel failure of anchor (shear load in transverse direction):<br>**Motstånd mot skador i stålet i kanalens skenor, och skador i anslutningen mellen ankaret och kanalen (tvärlaster i tvärgående riktning):** | $V^0_{Rk,s,l,y}$ ; $s_{l,V}$; $V_{Rk,s,c,y}$ ; $V_{Rk,s,a,y}$ |
| 15 | Resistance to steel failure of connection between channel lips and channel bolt (shear load in longitudinal channel axis):<br>**Motstånd mot skador i stålet i kanalens skenor, och skador i anslutningen mellen ankaret och kanalen (tvärlaster i längsgående riktning):** | $V_{Rk,s,l,x}$ |
| 16 | Factor for sensistivity to installation:<br>**Faktor för känslighet under installationen (Längsglidning):** | $\gamma_{inst}$ |
| 17 | Resistance to steel failure of the anchor:<br>**Motstånd mot skador i stålet på ankaret (Längsglidning):** | $V_{Rk,s,a,x}$ |
| 18 | Resistance to steel failure of connection between anchor and channel (shear load in longitudinal channel axis):<br>**Motstånd mot skador i stålet i ankarkanalen (tvärlaster i längsgående riktning):** | $V_{Rk,s,c,x}$ |
| 19 | Resistance to concrete pry-out failure:<br>**Motstån mot fläkning:** | $k_8$ |
| 20 | Resistance to concrete edge failure:<br>**Mostånd mot skador i betong:** | $k_{cr,V}$; $k_{ucr,V}$ |
| Characteristic resistance under combined static and quasi-static tension and shear loading<br>**Karakteristisk beständighet mot kombinerade statiska och kvasistatiska drag- och skjuvbelastningar** | | |
| 21 | Resistance to steel failure of the anchor channel:<br>**Motstånd mot skador i stålet i ankarkanalen:** | $k_{13}$, $k_{14}$ |
| Characteristic resistance under fatigue tension loading:<br>**Karaktäristiskt motstånd under spänningsbelastning:** | | |
| 22 | Fatigue resistance to steel failure of the whole system (continuous or tri-linear function):<br>**Utmattningshållfasthet mot stålbrott i hela systemet (kontinuerlig eller tri-lineär funktion,Bedömningsmetod A1, A2):** | $\Delta N_{Rk,s,0,n}$<br>(n=1 to n=∞) |
| 23 | Fatigue limit resistance to steel failure of the whole system:<br>**Utmattningsgräns för hela systemets motståndskraft mot stålbrott (Bedömningsmetod B):** | $\Delta N_{Rk,s,0,\infty}$ |
| 24 | Fatigue resistance to steel failure of the whole system (linearized function,assessment method C):<br>**Utmattningshållfasthet mot stålbrott i hela systemet (Linjäriserad funktion,Bedömningsmetod C):** | $\Delta N_{Rk,s,l0,n}$ ; $N_{lok,s,n}$<br>(n=$10^4$ to n=∞) |
| 25 | Fatigue resistance to concrete related failure (exponential function):<br>**Utmattningshållfasthet mot betongrelaterade brott (exponentiell funktion, Bedömningsmetod A1, A2):** | $\Delta N_{Rk,c,0,n}$ ; $\Delta N_{Rk,p,0,n}$<br>(n=1 to n=∞) |
| 26 | Fatigue limit resistance to concrete related failure:<br>**Utmattningsgräns motstånd mot betongrelaterade brott (Bedömningsmetod B):** | $\Delta N_{Rk,c,0,\infty}$ ; $\Delta N_{Rk,p,0,\infty}$ |
| 27 | Fatigue resistance to concrete related failure (linearized function, assessment method C):<br>**Utmattningshållfasthet mot betongrelaterade brott (Linjäriserad funktion, Bedömningsmetod C):** | $\Delta N_{Rk,c,E,n}$ ; $N_{Rk,p,E,n}$<br>(n=$10^4$ to n=∞) |

| | | |
|---|---|---|
| Characteristic resistance under seismic loading (seismic performance category C1)<br>**Karakteristiskt motstånd vid seismisk belastning (seismisk prestandakategori C1)** | | |
| 28 | Resistance to steel failure under seismic tension loading (seismic performance category C1):<br>**Motstånd mot stålfel vid seismisk dragbelastning (seismisk prestandakategori C1):** | $N_{Rk,s,a,eq}$; $N_{Rk,s,c,eq}$; $N^0_{Rk,s,l,eq}$; $N_{Rk,s,eq}$; $M_{Rk,s,flex,eq}$ |
| 29 | Resistance to steel failure under seismic shear loading for shear load in transverse direction (seismic performance category C1):<br>**Motstånd mot stålfel vid seismisk skjuvbelastning för tvärkraftsbelastning i tvärriktning (seismisk prestandakategori C1):** | $V_{Rk,s,eq}$; $V^0_{Rk,s,l,y,eq}$; $V_{Rk,s,c,y,eq}$; $V_{Rk,s,a,y,eq}$ |
| 30 | Resistance to steel failure under seismic shear loading for shear load in longitudinal channel axis (seismic performance category C1):<br>**Motstånd mot stålfel vid seismisk skjuvbelastning för tvärkraftsbelastning i kanalens längdriktning (seismisk prestandakategori C1):** | $V_{Rk,s,l,x,eq}$; $V_{Rk,s,a,x,eq}$; $V_{Rk,s,c,x,eq}$ |
| Characteristic resistance under static and quasi-static tension and / or shear loading:<br>**Karakteristiskt motstånd vid statisk och kvasi-statisk drag- och/eller skjuvbelastning** | | |
| 31 | Displacements:<br>**Förskjutningar:** | $\delta_{N0}$; $\delta_{N\infty}$; $\delta_{V,y,0}$; $\delta_{V,y,\infty}$ $\delta_{V,x,0}$ ; $\delta_{V,x,\infty}$ |
| Safety in case of fire (BWR 2)<br>**Säkerhet vid brand (BWR 2)** | | |
| 32 | Reaction to fire:<br>**Reaktion vid brand:** | Class |
| 33 | Resistance to fire:<br>**Motståndskraft mot eld:** | $N_{Rk,s,fi}$; $V_{Rk,y,s,fi}$, $c_{min,fi}$; $s_{min,fi}$ |
| Durability:<br>**Hållbarhet:** | | |
| 34 | Durability:<br>**Hållbarhet:** | Description |

**Specific Part**

## 1 Technical description of the product

The fischer Anchor Channel FES with fischer Channel Bolts FBC is a system consisting of a C-shaped channel profile of steel and at least two metal anchors non-detachably fixed on the channel back and fischer Channel Bolts.

The anchor channel is embedded surface-flush in the concrete. fischer Channel Bolts with appropriate hexagonal nuts and washers are fixed to the channel.

The product description is given in Annex A.

## 2 Specification of the intended use in accordance with the applicable European Assessment Document

The performances given in Section 3 are only valid if the anchor channel is used in compliance with the specifications and conditions given in Annex B.

The verifications and assessment methods on which this European Technical Assessment is based lead to the assumption of a working life of the anchor channel of at least 50 years. The indications given on the working life cannot be interpreted as a guarantee given by the producer, but are to be regarded only as a means for choosing the right products in relation to the expected economically reasonable working life of the works.

## 3 Performance of the product and references to the methods used for its assessment

### 3.1 Mechanical resistance and stability (BWR 1)

| Essential characteristic | Performance |
|---|---|
| Characteristic resistance under tension load (static and quasi-static loading) | |
| - Resistance to steel failure of anchors | $N_{Rk,s,a}$ see Annex C1 |
| - Resistance to steel failure of the connection between anchors and channel | $N_{Rk,s,c}$ see Annex C1 |
| - Resistance to steel failure of channel lips and subsequently pull-out of channel bolt | $N^0_{Rk,s,l}$ ; $s_{l,N}$ see Annex C1 |
| - Resistance to steel failure of channel bolt | $N_{Rk,s}$ see Annex C10 |
| - Resistance to steel failure by exceeding the bending strength of the channel | $s_{max}$ see Annex A5<br>$M_{Rk,s,flex}$ see Annex C2 |
| - Maximum installation torque to avoid damage during installation | $T_{inst,g}$ ; $T_{inst,s}$ see Annex B4 |
| - Resistance to pull-out failure of the anchor | $N_{Rk,p}$ see Annex C3 and C4 |
| - Resistance to concrete cone failure | $h_{ef}$ see Annex B3<br>$k_{cr,N}$ ; $k_{ucr,N}$ see Annex C3 and C4 |
| - Minimum edge distances, spacing and member thickness to avoid concrete splitting during installation | $s_{min}$ see Annex A5<br>$c_{min}$ ; $h_{min}$ see Annex B3 |
| - Characteristic edge distance and spacing to avoid splitting of concrete under load | $s_{cr,sp}$ ; $c_{cr,sp}$ see Annex C3 and C4 |
| - Resistance to blowout failure - bearing area of anchor head | $A_h$ see Annex A4 |

| Essential characteristic | Performance |
|---|---|
| Characteristic resistance under shear load (static and quasi-static loading) | |
| - Resistance to steel failure of channel bolt under shear loading without lever arm | $V_{Rk,s}$ see Annex C10 |
| - Resistance to steel failure by bending of the channel bolt under shear load with lever arm | $M_{Rk,s}^{0}$ see Annex C11 |
| - Resistance to steel failure of channel lips, steel failure of connection between anchor and channel and steel failure of anchor (shear load in transverse direction) | $V_{Rk,s,l,y}^{0}$ ; $s_{l,V}$ ; $V_{Rk,s,c,y}$ ; $V_{Rk,s,a,y}$ see Annex C6 and C7 |
| - Resistance to steel failure of connection between channel lips and channel bolt (longitudinal shear) | $V_{Rk,s,l,x}$ see Annex C8 |
| - Factor for sensitivity to installation (longitudinal shear) | $\gamma_{inst}$ see Annex C8 |
| - Resistance to steel failure of the anchor (longitudinal shear) | $V_{Rk,s,a,x}$ see Annex C6 and C7 |
| - Resistance to steel failure of connection between anchor and channel (longitudinal shear) | $V_{Rk,s,c,x}$ see Annex C6 and C7 |
| - Resistance to concrete pry-out failure | $k_8$ see Annex C8 |
| - Resistance to concrete edge failure | $k_{cr,V}$ ; $k_{ucr,V}$ see Annex C8 |
| Characteristic resistance under combined tension and shear load (static and quasi-static load) | |
| - Resistance to steel failure of the anchor channel | $k_{13}$ ; $k_{14}$ see Annex C9 |
| Characteristic resistance under fatigue tension loading | |
| - Fatigue resistance to steel failure of the whole system (continuous or tri-linear function, assessment method A1, A2) | No Performance assessed |
| - Fatigue limit resistance to steel failure of the whole system (assessment method B) | No Performance assessed |
| - Fatigue resistance to steel failure of the whole system (linearized function, assessment method C) | No performance assessed |
| - Fatigue resistance to concrete related failure (exponential function, assessment method A1, A2) | No Performance assessed |
| - Fatigue limit resistance to concrete related failure (assessment method B) | No Performance assessed |
| - Fatigue resistance to concrete related failure (linearized function, assessment method C) | No performance assessed |

| Essential characteristic | Performance |
|---|---|
| Characteristic resistance under seismic loading (seismic performance category C1) | |
| Resistance to steel failure under seismic tension loading (seismic performance category C1) | $N_{Rk,s,a.eq}$ ; $N_{Rk,s,c.eq}$ ; $N^0{}_{Rk,s,l.eq}$ ; $M_{Rk,s,flex.eq}$ see Annex C12<br>$N_{Rk,s.eq}$ see Annex C14 |
| Resistance to steel failure under seismic shear loading for shear load in transverse direction (seismic performance category C1) | $V_{Rk,s.eq}$ see Annex C14<br>$V^0{}_{Rk,s,l,y.eq}$ ; $V_{Rk,s,c,y.eq}$ ; $V_{Rk,s,a,y.eq}$ see Annex C13 |
| Resistance to steel failure under seismic shear loading for shear load in longitudinal channel axis (seismic performance category C1) | $V_{Rk,s,l,x.eq}$ ; $V_{Rk,s,a,x.eq}$ ; $V_{Rk,s,c,x.eq}$ see Annex C13 |
| Characteristic resistance under static and quasi-static tension and/or shear loading | |
| Displacements | $\delta_{N0}$ ; $\delta_{N\infty}$ see Annex C5<br>$\delta_{V,y,0}$ ; $\delta_{V,y,\infty}$ ; $\delta_{V,x,0}$ ; $\delta_{V,x,\infty}$ see Annex C9 |

### 3.2 Safety in case of fire (BWR 2)

| Essential characteristic | Performance |
|---|---|
| Reaction to fire | Class A1 |
| Characteristic resistance to fire | $N_{Rk,s,fi}$ ;$V_{Rk,s,y,fi}$ see Annex C15 |

### 3.3 Aspects of durability linked with the Basic Works Requirements

| Essential characteristic | Performance |
|---|---|
| Durability | See Annex B1 |

## 4 Assessment and verification of constancy of performance (AVCP) system applied, with reference to its legal base

In accordance with EAD No. 330008-04-0601, the applicable European legal act is: [2000/273/EC].

The system to be applied is: 1

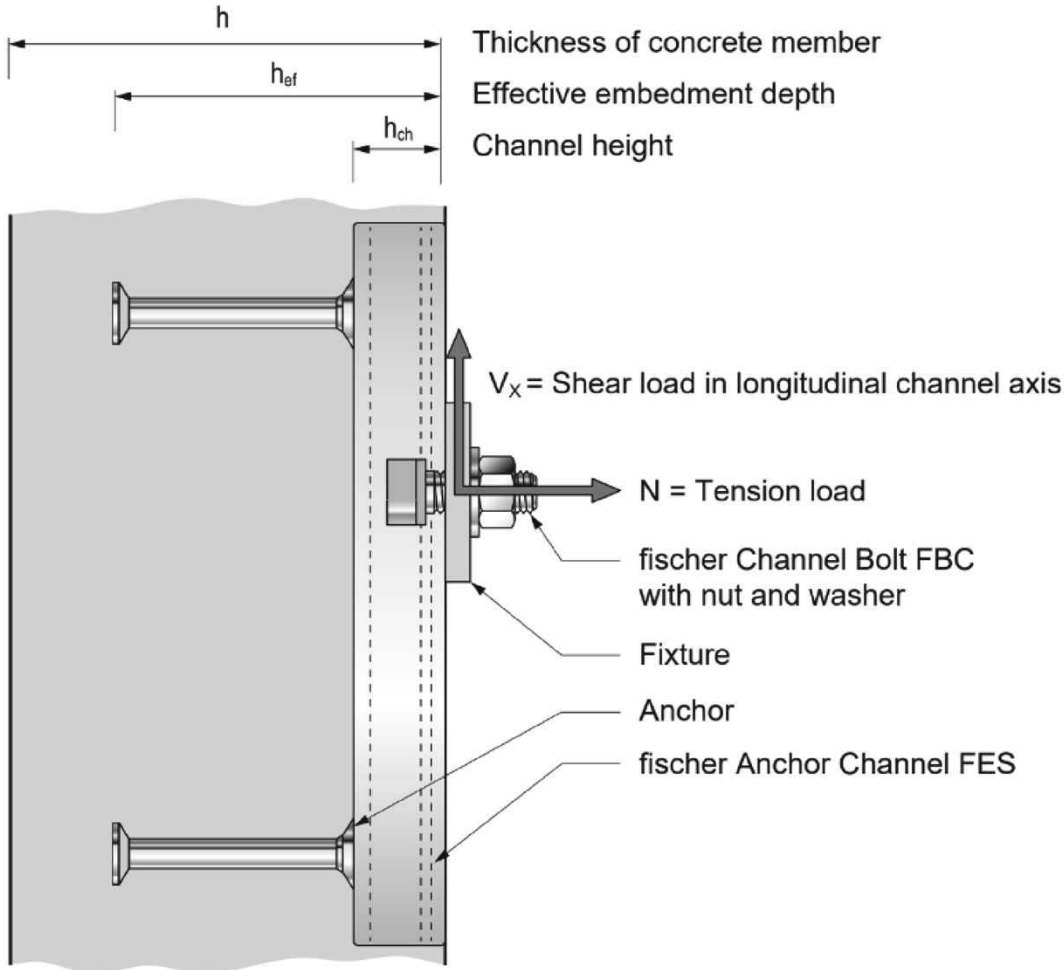


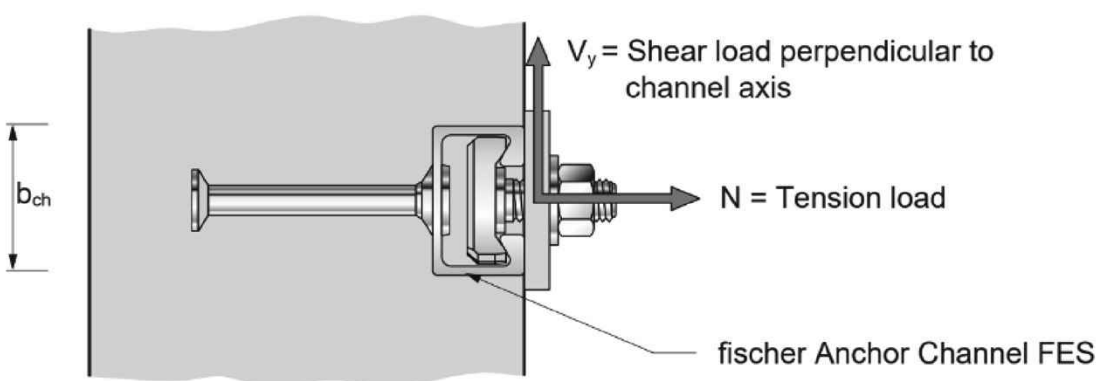


**fischer Anchor Channel FES with fischer Channel Bolts FBC**

**Product Description**
Installed condition

Annex A1

Appendix 4 / 34

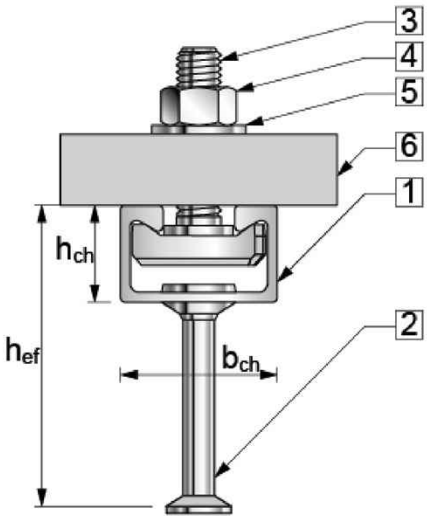


Round Anchor

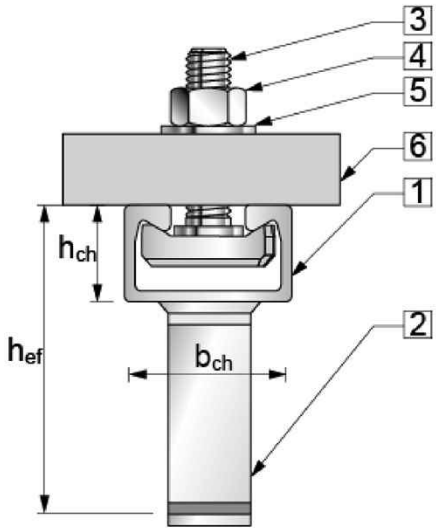


I-Anchor

Fischer Anchor channel FES with fischer Channel Bolt FBC:

1 Channel profile
2 Anchor
3 Channel bolt
4 Hexagonal nut
5 Washer
6 Fixture

**Marking of the fischer anchor channel FES:**

e.g..: I-50/30

| | |
|---|---|
| | = Identifying mark of the manufacturer |
| I | = Additional marking for I-anchors<br>No marking for round anchors |
| 50/30(-P) | = Anchor channel size<br>(29/20; 38/23; 40/22; 50/30; 52/34, 28/15; 38/17; 40/25; 49/30; 54/33) |
| P | = Additional marking for P-version |

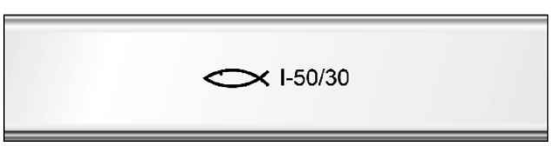


Stamped into back of channel
Optional: printed on channel web or channel lips
H = Hot rolled channel, C = Cold formed channel
No marking for material acc. Annex A7 Table A7.1 (Channel profile)

**Marking of the fischer channel bolt FBC:**

e.g.: 5030 8.8 N

| | |
|---|---|
| | = Identifying mark of the manufacturer |
| 5030 | = Size of channel bolt |
| 8.8 | = Steel grade |
| A4-70 | = Stainless steel |
| N | = Notching channel bolt (if applicable) |
| ● | = Electroplated<br>No marking for hot-dip galvanised |

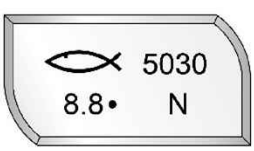


Additional marking of channel bolt (smooth, serrated, notching channel bolt head) according to Annex A6 at the top of thread.

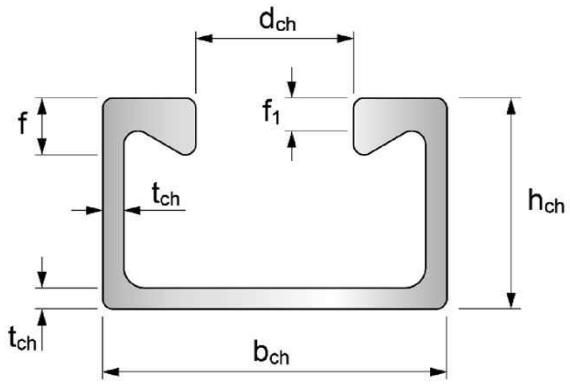


FES-H-(I-)-40/22(-P), -50/30(-P), -52/34

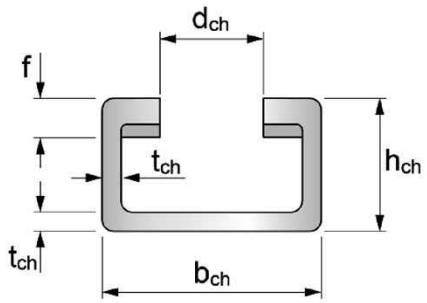


FES-H-S-29/20, -38/23 (serrated)

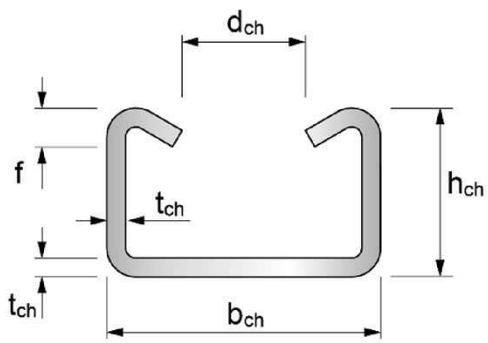


FES-C-40/25, -49/30, -54/33

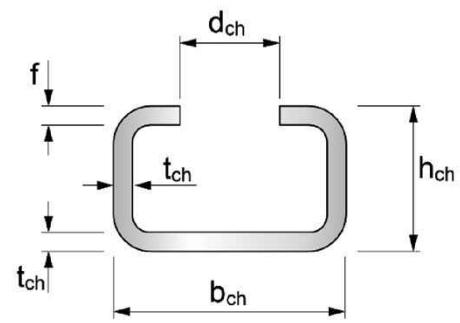


FES-C-28/15, -38/17

**Table A3.1: Dimensions of hot-rolled and cold-formed channel profile (steel and stainless steel)**

| Anchor Channel FES- | Material | $b_{ch}$ [mm] | $h_{ch}$ [mm] | $t_{ch}$ [mm] | $d_{ch}$ [mm] | f [mm] | $f_1$ [mm] | $I_y$ [mm$^4$] |
|---|---|---|---|---|---|---|---|---|
| C-28/15 | Steel | 28,0 | 15,5 | 2,3 | 12,0 | 2,3 | -[1)] | 4.280 |
| C-38/17 | Steel | 38,0 | 17,3 | 3,0 | 18,0 | 3,0 | -[1)] | 8.240 |
| C-40/25 | Steel | 40,0 | 25,0 | 2,8 | 18,0 | 6,0 | -[1)] | 20.340 |
| C-49/30 | Steel | 50,0 | 30,0 | 3,3 | 22,0 | 7,0 | -[1)] | 43.080 |
| C-54/33 | Steel | 54,0 | 33,0 | 5,0 | 22,0 | 8,5 | -[1)] | 74.090 |
| H-S-29/20 | Steel | 30,0 | 20,0 | 3,0 | 14,0 | 5,2 | -[1)] | 11.150 |
| H-S-38/23 | Steel/ Stainless steel | 38,0 | 23,0 | 3,3 | 18,0 | 6,0 | -[1)] | 21.070 |
| H-(I-)40/22(-P) | Steel | 40,0 | 23,5 | 2,6 | 18,0 | 6,2 | 3,6 | 21.660 |
| H-(I-)50/30(-P) | Steel | 50,0 | 30,0 | 3,0 | 22,5 | 8,1 | 5,5 | 54.960 |
| H-(I-)52/34 | Steel | 52,5 | 34,0 | 4,0 | 22,5 | 11,5 | 8,3 | 96.330 |

[1)] This dimension is not available for this product.

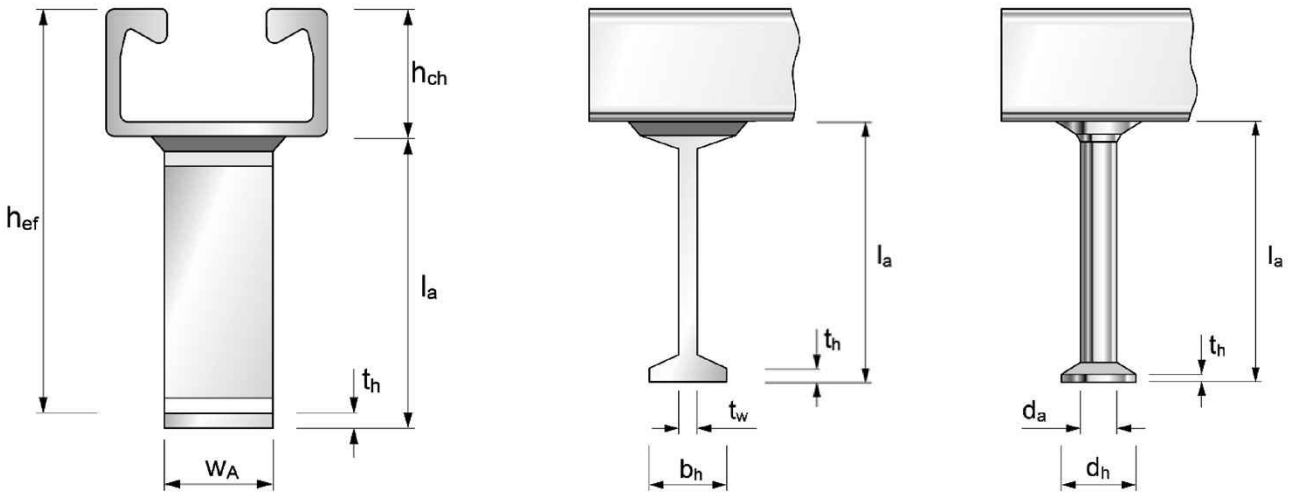


**Table A.4.1: Dimensions of anchor (welded I-anchor or forged round anchor)**

| Anchor Channel FES - | I-anchor | | | | | | Round anchor | | | | |
|---|---|---|---|---|---|---|---|---|---|---|---|
| | $l_{a,min}$ [mm] | $t_{w,min}$ [mm] | $b_{h,min}$ [mm] | $t_h$ [mm] | $w_A$ [mm] | $A_{h,min}$ [mm²] | $l_{a,min}$ [mm] | $d_a$ [mm] | $d_h$ [mm] | $t_h$ [mm] | $A_h$ [mm²] |
| C-28/15 | - 2) | | | | | | 31,0 | 6 | 12,0 | 1,3 | 85 |
| C-38/17 | - 2) | | | | | | 60,8 | 8 | 16,0 | 2,0 | 151 |
| C-40/25 | - 2) | | | | | | 56,0 | 8 | 16,0 | 2,0 | 151 |
| C-49/30 | - 2) | | | | | | 66,0 | 10 | 20,0 | 2,2 | 236 |
| C-54/33 | - 2) | | | | | | 124,5 | 11 | 24,3 | 2,5 | 369 |
| H-S-29/20 1) | - 2) | | | | | | 59,5 | 8 | 18,0 | 2,0 | 204 |
| H-S-38/23 | - 2) | | | | | | 76,2 | 10 | 20,0 | 2,2 | 236 |
| H-(I-)40/22 | 62 | 5 | 20 | 5 | 20 | 300 | 68,5 | 8 | 16,0 | 2,0 | 151 |
| H-40/22-P | - 2) | | | | | | 69,7 | 10 | 20,0 | 2,2 | 236 |
| H-(I-)50/30 | 69 | 5 | 20 | 5 | 25 | 375 | 66,2 | 10 | 20,0 | 2,2 | 236 |
| H-50/30-P | - 2) | | | | | | 78,5 | 11 | 24,3 | 2,5 | 369 |
| H-(I-)52/34 3) | 126 | 5 | 20 | 5 | 40 | 600 | 123,5 | 11 | 24,3 | 2,5 | 369 |

1) Alternative round anchor: $d_a$ = 10 mm, $d_h$ = 20 mm, $t_h$ = 2,5 mm, $A_h$ = 236 mm², $l_{a,min}$ = 59,5 mm.
2) Product not available.
3) Alternative I-anchor: $t_w$ = 6 mm, $b_h$ = 25 mm, $t_h$ = 5 mm, $w_A$ = 40 mm, $l_{amin}$ = 126 mm.

**Table A5.1: Dimensions of Anchor Channels FES**

| Anchor channel FES- | Anchor type | $s_{min}$ [mm] | $s_{max}$ [mm] | $x_{min}$ [mm] | $x_{max}$ [mm] | $l_{min}$ [mm] | $l_{max}$ [mm] |
|---|---|---|---|---|---|---|---|
| C-28/15 | round | 50 | 200 | 25 | 35 | 100 | 6.070 |
| C-38/17 | | | | | | | |
| C-40/25 | | | 250 | | | | |
| C-49/30 | | 100 | | | | 150 | |
| C-54/33 | | | | | | | |
| H-S-29/20 | | 50 | 200 | | | 100 | |
| H-S-38/23 | | 100 | 250 | | | 150 | |
| H-(I-)40/22(-P) | round or I | | | | | | |
| H-(I-)50/30 | round or I | | | | | | |
| H-I-52/34 | I | | | | | | |
| H-50/30-P<br>H-52/34 | round | | | 35 | | 170 | |

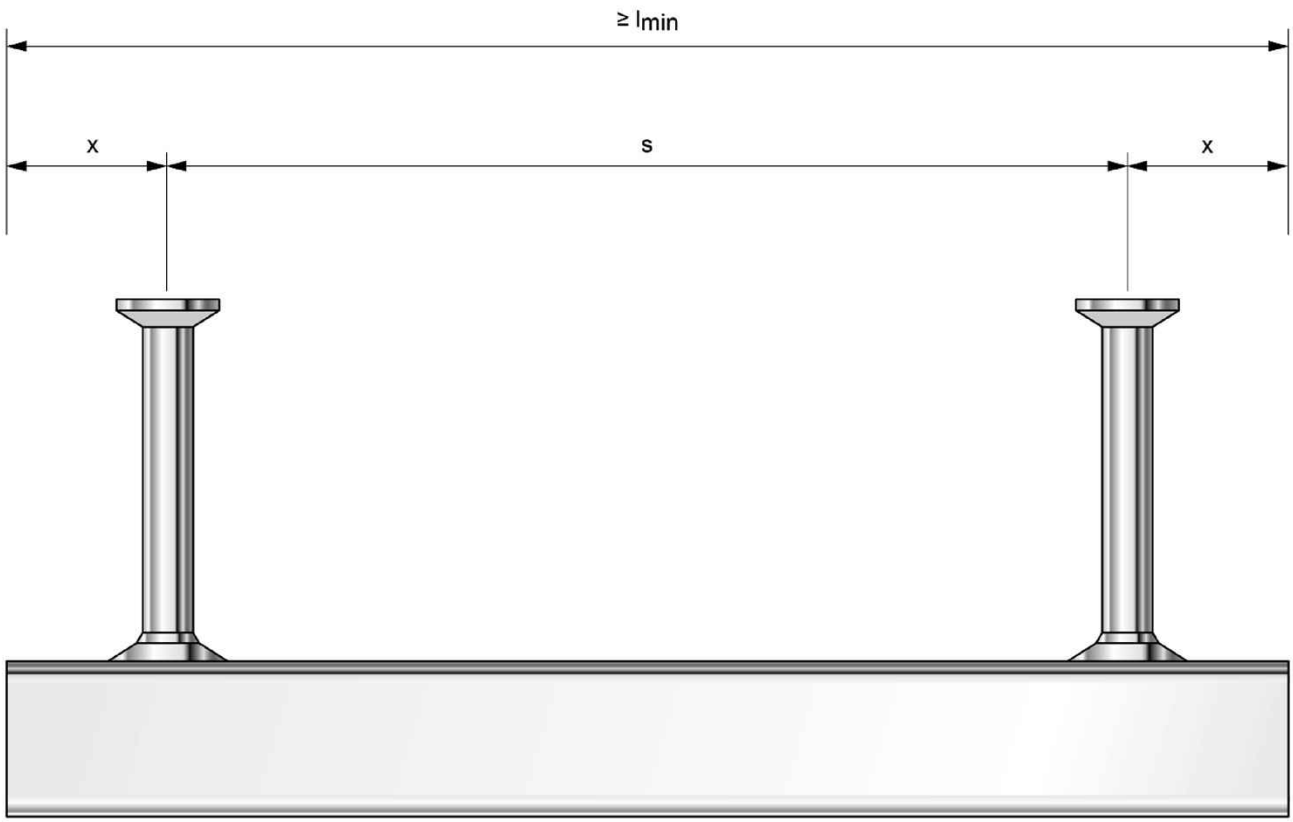

**Table A6.1: Steel grade and coating**

| Channel Bolt | Carbon steel [1)] | Stainless steel[1)] |
|---|---|---|
| Steel grade | 8.8 | A4-70 |
| $f_{uk}$ [N/mm²] | 800 / 830 | 700 |
| $f_{yk}$ [N/mm²] | 640 / 660 [2)] | 450 |
| Coating | G [3)] F [4)] | - |

[1)] Material properties according to Annex A7.
[2)] Material properties according to EN ISO 898-1:2013+AC:2013.
[3)] Electroplated.
[4)] Hot-dip galvanised.

**Table A6.2: Dimensions of fischer Channel Bolts FBC**

| Anchor Channel FES- | Channel Bolt FBC- | Steel grade | Dimensions | | | |
|---|---|---|---|---|---|---|
| | | | d [mm] | $b_{cbo,1}$ [mm] | $b_{cbo,2}$ [mm] | $t_{cbo}$ [mm] |
| C-28/15 | 28/15 | 8.8 | 8<br>10<br>12 | 11,0 | 22,2 | 5,0<br>5,0<br>7,0 |
| C-38/17 | 38/17 | 8.8 | 10<br>12<br>16 | 16,0 | 30,0 | 6,0<br>7,0<br>8,0 |
| H-S-29/20 | S-29/20 | 8.8 | 12 | 13,0 | 22,0 | 6,5 |
| H-S-38/23<br>C-38/17 | S-38/23 | 8.8<br>A4-70 | 12<br>16 | 16,7 | 29,1 | 5,8 |
| H(-I)-40/22(-P)<br>C-40/25 | 40/22 | 8.8 | 10 | 14,0 | 32,5 | 8,0 |
| | | 8.8<br>A4-70 | 12<br>16 | 14,0<br>17,0 | | |
| H(-I)-40/22(-P) | N-40/22 | 8.8 | 16 | 17,0 | 33,0 | 7,8 |
| C-49/30<br>H(-I)-50/30<br>C-54/33<br>H(-I)-52/34 | 50/30 | 8.8 | 10 | 17,1 | 40,5 | 9,0 |
| | | 8.8<br>A4-70 | 12<br>16<br>20 | 17,1<br>17,1<br>20,5 | | 10,0<br>11,0<br>12,0 |
| H(-I)-50/30(-P)<br>H(-I)-52/34 | N-50/30 | 8.8 | 16<br>20 | 17,5<br>21,0 | 42,2 | 12,0<br>12,0 |

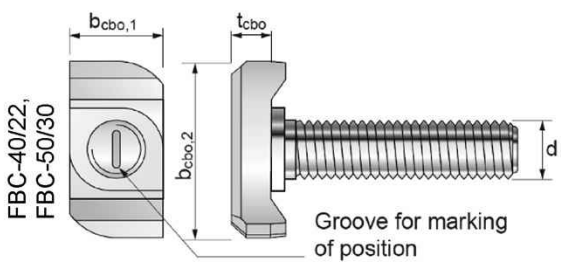


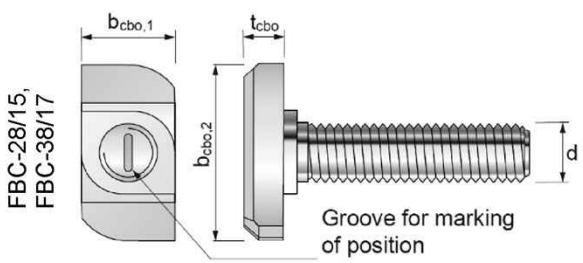


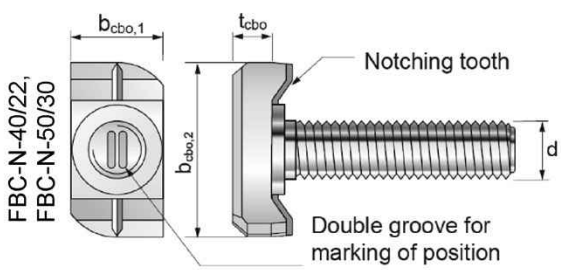


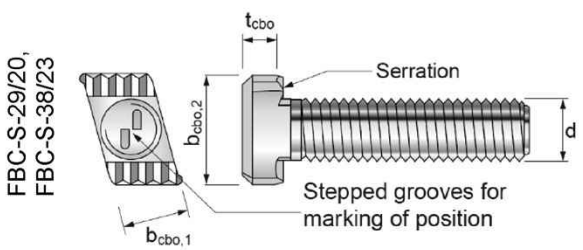


**fischer Anchor Channel FES with fischer Channel Bolts FBC**

**Product Description**
Channel bolts

Annex A6

**Table A7.1: Materials and properties**

| Component | Carbon steel | | | Stainless steel |
|---|---|---|---|---|
| | Mechanical properties | Coating | Coating | Mechanical properties |
| 1 | 2 | 2a | 2b | 3 |
| Channel profile | 1.0038, 1.0044 acc. to EN 10025:2004 1.0976, 1.0979 acc. to EN 10149:2013 | Hot-dip galvanised ≥ 50 µm acc. to EN ISO 1461:2022 | | 1.4401, 1.4404, 1.4571, 1.4578 according to EN 10088: 2023 |
| Anchor | 1.0038, 1.0213, 1.0214 acc. to EN 10025:2004 1.5525, 1.5535 acc. to EN 10263:2017 1.5523 acc. to EN 10269:2014-02 | Hot-dip galvanised ≥ 50 µm acc. to EN ISO 1461:2022 | | 1.4401, 1.4404, 1.4571, 1.4578 according to EN 10088: 2023 |
| Channel bolt | Steel grade 8.8 acc. to EN ISO 898-1:2013 +AC:2013 | Electroplated acc. to EN ISO 4042:2022 | Hot-dip galvanised ≥ 50 µm acc. to EN ISO 10684:2004 + AC:2009 | Steel grade 70 according to EN ISO 3506-1: 2020 |
| Plain washer [1] acc. to EN ISO 7089:2000 and EN ISO 7093-1:2000 | Hardness class A ≥ 200 HV | Electroplated acc. to EN ISO 4042:2022 | Hot-dip galvanised ≥ 50 µm acc. to EN ISO 10684:2004 + AC:2009 | 1.4401, 1.4404, 1.4571; 1.4578 according to EN 10088: 2023 |
| Hexagonal nut acc. to EN ISO 4032:2023 | Property class 5 or 8 acc. to EN ISO 898-2:2022 | Electroplated acc. to EN ISO 4042:2022 | Hot-dip galvanised ≥ 50 µm acc. to EN ISO 10684:2004 + AC:2009 | Property class 70 or 80 according to EN ISO 3506-2: 2020 |

[1] Not in the scope of delivery.

## Specification of intended use

**Anchor channels and channel bolts subject to:**

- Static and quasi-static tension, shear perpendicular to the longitudinal axis of the channel
- Static and quasi-static shear in the direction of the longitudinal axis of the channel.
  (anchor channels FES-H(-I)-40/22(-P) with notching channel bolts FBC-N-40/22, anchor channels FES-H(-I)-50/30(-P) or FES-H(-I)-52/34 with notching channel bolts FBC-N-50/30 and serrated anchor channels FES-H-S in combination with serrated channel bolts FBC-S).
- Seismic tension, seismic shear perpendicular to the longitudinal axis of the channel and seismic shear in the direction of the longitudinal axis of the channel (seismic performance category C1)
  (anchor channels and channel bolts according to Annex C12).
- Fire exposure for concrete strength class C20/25 to C50/60 for tension and shear perpendicular to the longitudinal axis of the channel
  (anchor channels and channel bolts according to Annex C15).

**Base materials:**

- Reinforced or unreinforced compacted normal weight concrete without fibres according to EN 206:2013+A2:2021.
- Strength classes C12/15 to C90/105 according to EN 206:2013+A2:2021.
- Cracked or uncracked concrete.

**Use conditions (Environmental conditions):**

- Structures subject to dry internal conditions
  (anchor channels and channel bolts according to Annex A7, Table A7.1, column 2a and 2b, 3).
- Structures subject to internal conditions with usual humidity (e.g. kitchens, bathrooms and laundries in residential buildings, exceptional permanent damp conditions and application under water)
  (anchor channels and channel bolts according to Annex A7, Table A7.1, column 2b, 3).
- According to EN 1993-1-4:2006 +A1:2015+A2:2020 relating to corrosion resistance class CRC III
  (anchor channels, channel bolts, washers and nuts made of stainless steel according to Annex A7, Table A7.1, column 3).

**Design:**

- Anchor channels are designed under the responsibility of an engineer experienced in anchorages and concrete work.
- Verifiable calculation notes and drawings are prepared taking account of the loads to be anchored. The position of the anchor channel and channel bolts are indicated on the design drawings (e.g. position of the anchor channel relative to the reinforcement or to supports).
- For static and quasi-static loading as well as seismic loading (performance category C1) and fire exposure the anchor channels are designed in accordance with EN 1992-4:2018 and EOTA TR 047 “Design of Anchor Channels”, May 2021.
- The characteristic resistances are calculated with the minimum effective embedment depth.

**Installation:**

- The installation of anchor channels is carried out by appropriately qualified personnel under the supervision of the person responsible for the technical matters on site.
- Use of the anchor channels only as supplied by the manufacturer - without any manipulations, repositioning or exchanging of channel components.
- Cutting of anchor channels is allowed only if pieces according to Annex A5, Table A5.1 are generated including end spacing x and minimum channel length $l_{min}$ and only to be used in dry internal conditions. For anchor channels made of stainless steel there are no restrictions regarding corrosion resistance when using channel pieces, if cutting is done professionally and contamination of cutting edges with corroding material is avoided.
- Installation in accordance with the installation instruction given in Annexes B5, B6, B7 or B8.
- The anchor channels are fixed on the formwork, reinforcement or auxiliary construction such that no movement of the channels will occur during the time of laying the reinforcement and of placing and compacting the concrete.
- The concrete around the head of the anchors is properly compacted. The channels are protected from penetration of concrete into the internal space of the channels.
- Washers may be chosen according to Annex A7 and provided separately by the user.
- Orientating the channel bolt (groove according to Annex B6, B7 and B8) rectangular to the channel axis.
- The required installation torque given in Annex B4 must be applied and must not be exceeded.
- Notching channel bolts FBC-N may be used only once after applying the installation torque $T_{inst,s}$.

**Table B3.1: Installation parameters**

| Anchor Channel FES- | | | C-28/15 | C-38/17 | H-S-29/20 | H-S-38/23 | C-40/25<br>H-40/22<br>H-40/22-P<br>H-I-40/22 | C-49/30<br>H-50/30<br>H-50/30-P<br>H-I-50/30 | C-54/33<br>H-52/34<br>H-I-52/34 |
|---|---|---|---|---|---|---|---|---|---|
| Minimum effective embedment depth | $h_{ef,min}$ | [mm] | 45 | 76 | 77 | 97 | 79<br>90<br>91<br>79 | 94<br>94<br>106<br>94 | 155<br>155<br>155 |
| Minimum edge distance | $c_{min}$ | | 40 | 50 | 50 | 75 | 50<br>50<br>50<br>50 | 75<br>75<br>75<br>75 | 100<br>100<br>100 |
| Minimum thickness of concrete member | $h_{min}$ 1) | | 55 | 87 2) | 120 3) | 100 | 90<br>100<br>100<br>100 | 100<br>100<br>109<br>100 | 160<br>160<br>170 |

1) For corrosion protection: $h_{min} = h_{ef} + t_h + c_{nom}$; $c_{nom}$ acc. to EN 1992-1-1:2004 + AC:2010.

2) $h_{min}$ = 100 mm for FES-C-38/17 in combination with FBC-S-38/23.

3) $h_{min}$ = 100 mm if $c_{min}$ = 100 mm and $s_{min}$ = 100 mm.

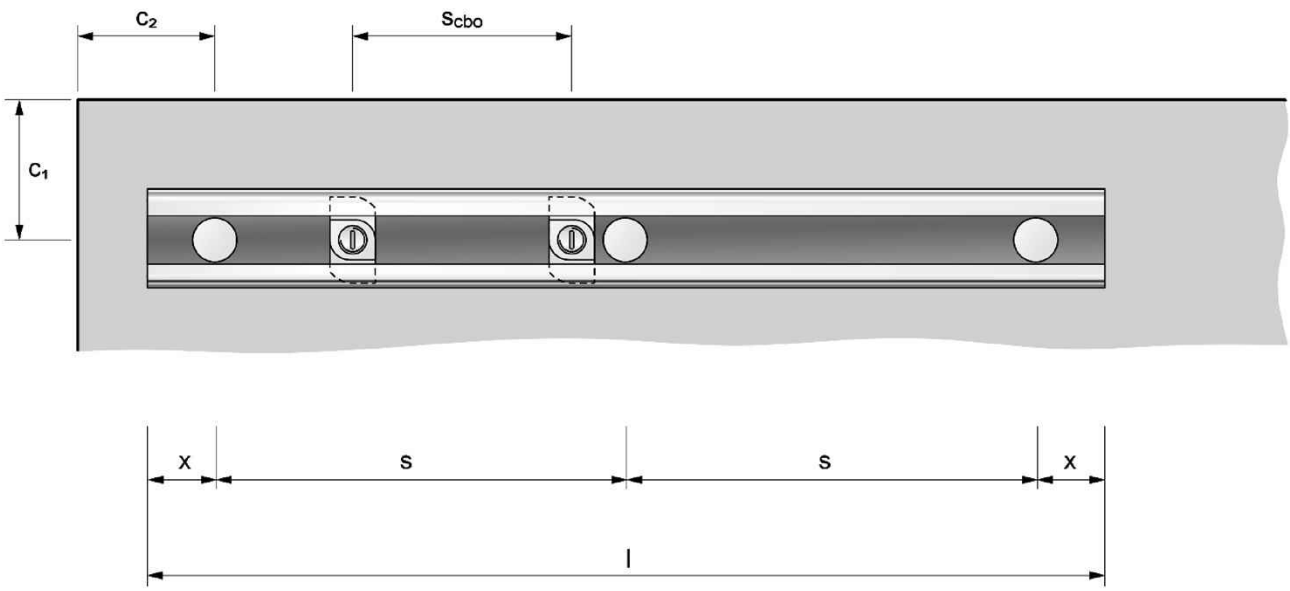


**Table B3.2: Minimum spacing for channel bolts**

| Channel bolt | | | M8 | M10 | M12 | M16 | M20 |
|---|---|---|---|---|---|---|---|
| Minimum spacing between channel bolts | $s_{cbo,min}$ | [mm] | 40 | 50 | 60 | 80 | 100 |

**Table B4.1: Required installation torque $T_{inst}$**

| fischer Anchor channel FES- | fischer Channel Bolt FBC | Thread diameter | $T_{inst}$ [1] [Nm] | | | |
|---|---|---|---|---|---|---|
| | | | General | | Steel - steel contact | |
| | | | $T_{inst,g}$ | | $T_{inst,s}$ | |
| | | | 8.8 | A4-70 | 8.8 | A4-70 |
| C-28/15 | 28/15 | M8 | 7 | -[2] | 15 | -[2] |
| | | M10 | 10 | -[2] | 30 | -[2] |
| | | M12 | 13 | -[2] | 45 | -[2] |
| C-38/17 | 38/17 | M10 | 15 | -[2] | 30 | -[2] |
| | | M12 | 20 | -[2] | 45 | -[2] |
| | | M16 | 30 | -[2] | 100 | -[2] |
| H-S-29/20 | S-29/20 | M12 | 80 | -[2] | 80 | -[2] |
| H-S-38/23 | S-38/23 | M12 | 80 | 80 | 80 | 80 |
| | | M16 | 100 | 100 | 100 | 100 |
| C-38/17 | | M12 | 40 | -[2] | 80 | -[2] |
| | | M16 | 50 | -[2] | 100 | -[2] |
| H(-I)-40/22(-P)<br>C-40/25 | 40/22 | M10 | 15 | -[2] | 30 | -[2] |
| | | M12 | 24 | 24 | 45 | 45 |
| | | M16 | 32 | 32 | 100 | 100 |
| | N-40/22 | M16 | -[2] | -[2] | 200 | -[2] |
| C-49/30<br>H(-I)-50/30(-P)<br>C-54/33<br>H(-I)-52/34 | 50/30 | M10 | 15 | -[2] | 30 | -[2] |
| | | M12 | 25 | 25 | 45 | 45 |
| | | M16 | 60 | 60 | 100 | 100 |
| | | M20 | 75 | 75 | 230 | 230 |
| H(-I)-50/30(-P),<br>H(-I)-52/34 | N-50/30 | M16 | -[2] | -[2] | 200 | -[2] |
| | | M20 | -[2] | -[2] | 400 | -[2] |

[1] $T_{inst}$ must not be exceeded.
[2] No performance assessed.

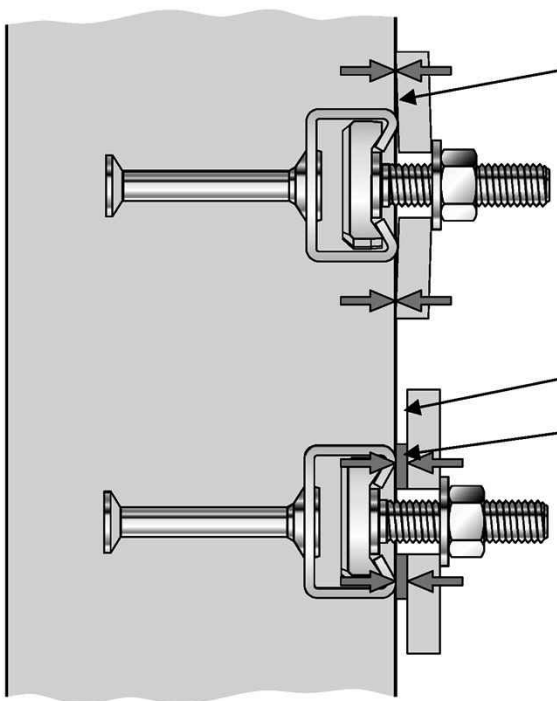

General:
The fixture is in contact with the channel profile and the concrete surface by tightening with $T_{inst,g}$.

Gap

Steel-to-steel contact:
The fixture is not in contact with the concrete surface. The fixture is fastened to the anchor channel by a suitable steel part
(e.g. washer) by tightening with $T_{inst,s}$.
($T_{inst,s} \geq T_{inst,g}$ )

# Anchor channel FES

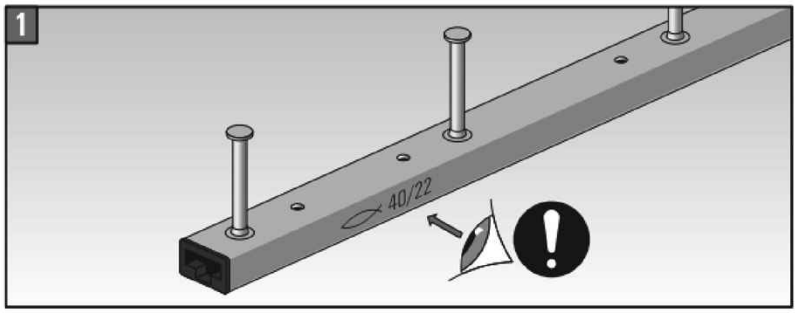


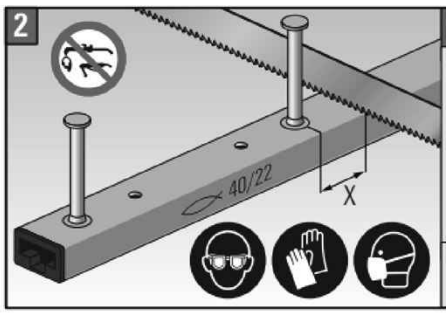


| X | | |
|---|---|---|
| | FES-H- | FES-C- |
| 25 - 35 mm | S - 29/20 | 28/15 |
| | S - 38/23 | 38/17 |
| | (I-)40/22(-P) | 40/25 |
| | (I-)50/30 | 49/30 |
| | I-52/34 | 54/33 |
| 35 mm | 50/30-P | |
| | 52/34 | |

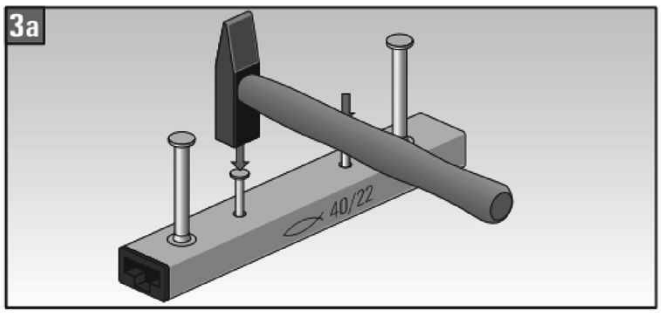


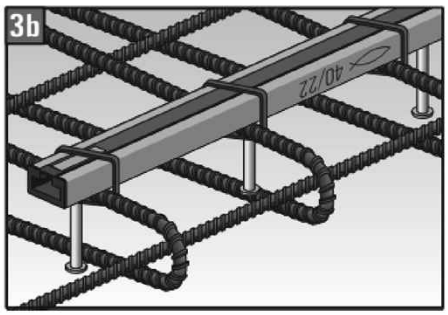


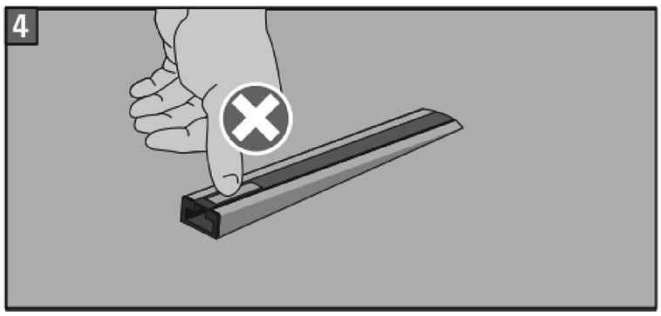


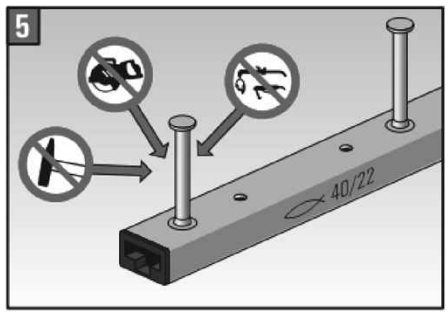


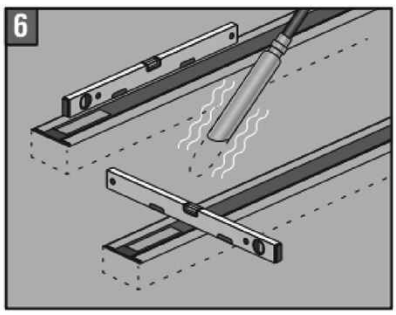


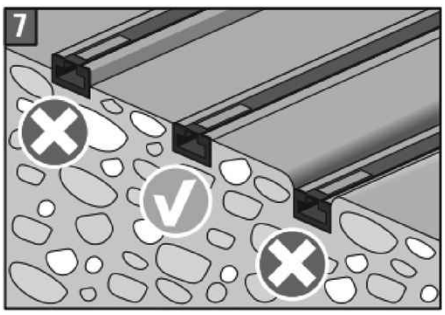


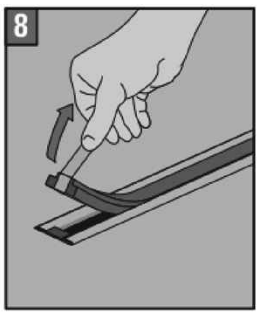

# Channel bolt FBC

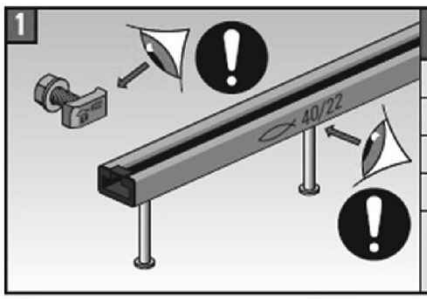


| FBC- | FES-H-(I-) | FES-C- |
|---|---|---|
| 2815 | - | 28/15 |
| 3817 | - | 38/17 |
| 4022 | 40/22 | 40/25 |
| 5030 | 50/30<br>52/34 | 49/30<br>54/33 |

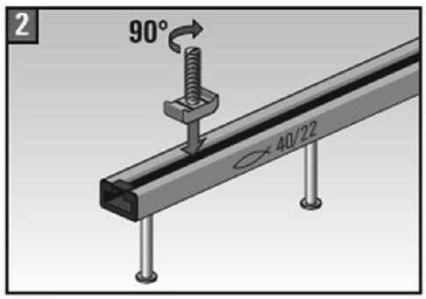


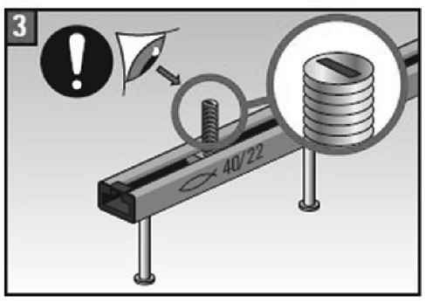


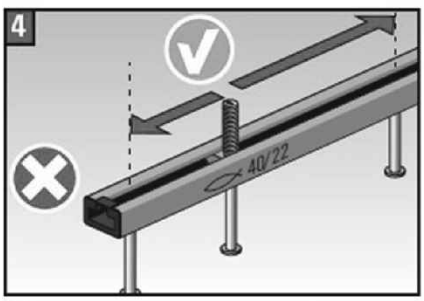


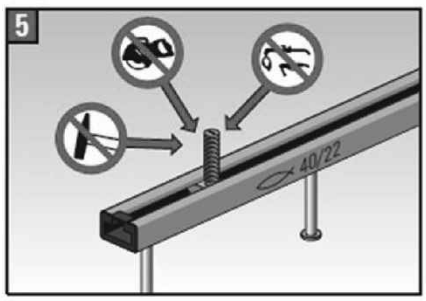


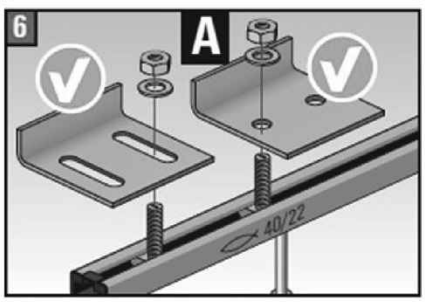


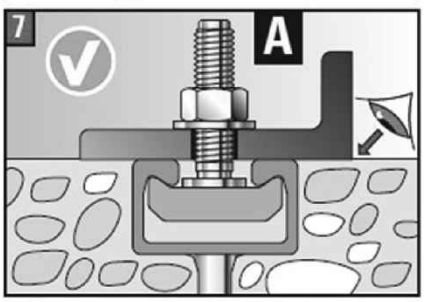


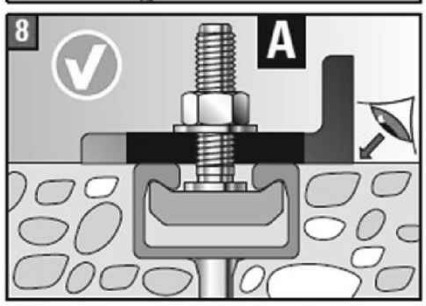


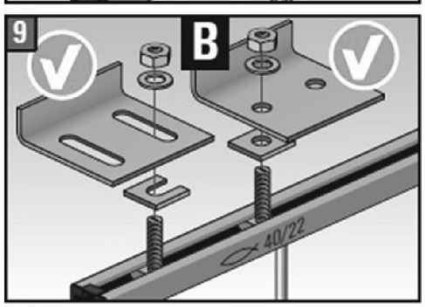


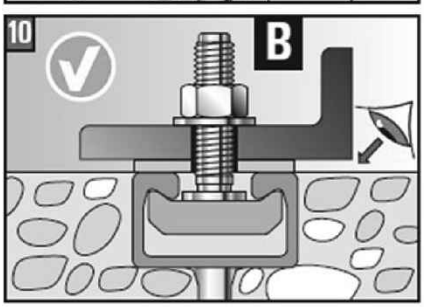


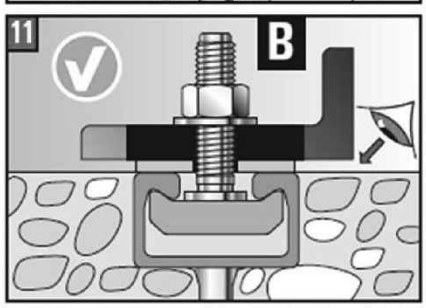


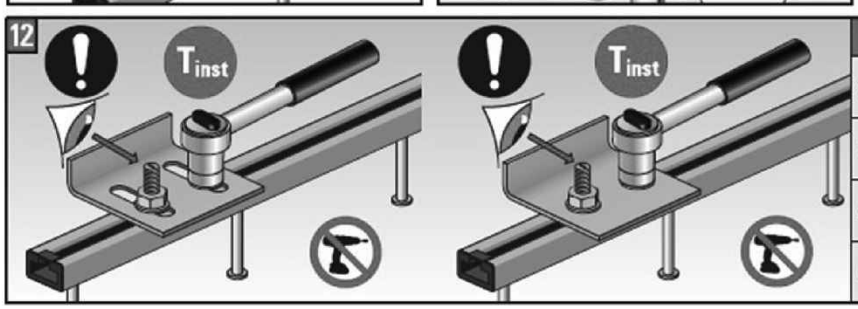


| FBC | $T_{inst}$[1] [Nm] | M8 | M10 | M12 | M16 | M20 |
|---|---|---|---|---|---|---|
| 2815 | A | 7 | 10 | 13 | - | - |
| | B | 15 | 30 | 45 | - | - |
| 3817 | A | - | 15 | 20 | 30 | - |
| | B | - | 30 | 45 | 100 | - |
| 4022[2] | A | - | 15 | 24 | 32 | - |
| | B | - | 30 | 45 | 100 | - |
| 5030[2] | A | - | 15 | 25 | 60 | 75 |
| | B | - | 30 | 45 | 100 | 230 |

[1] $T_{inst}$ must not be exceeded.
[2] applies to all materials (8.8 and A4-70).

**fischer Ankerschiene FES mit fischer Spezialschrauben FBC**

**Verwendungszweck**
Montageanleitung für fischer Zahnschrauben FBC-S

# Serrated channel bolt FBC-S

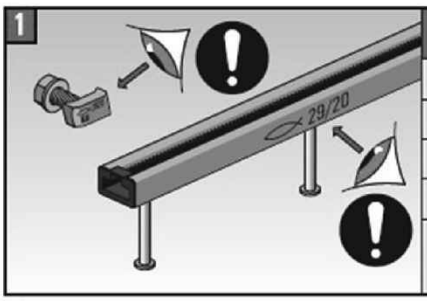


| FBC-S- | FES-H-S- | FES-C- |
|---|---|---|
| 2920 | 29/20 | - |
| 3823 | 38/23 | 38/17 |
| | | |
| | | |

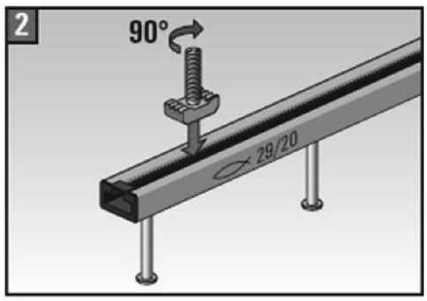


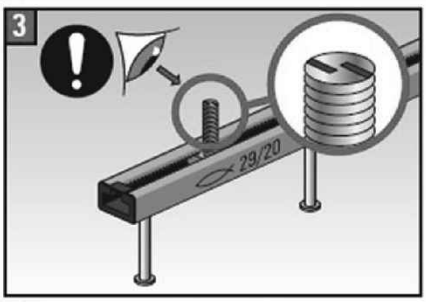


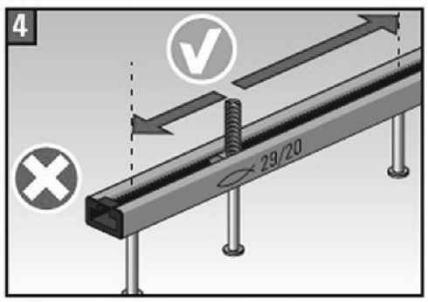


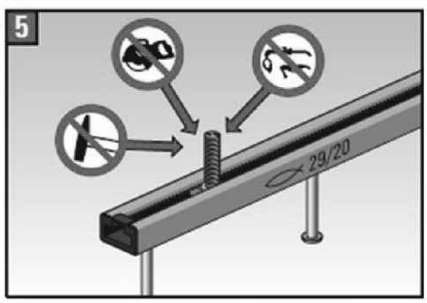


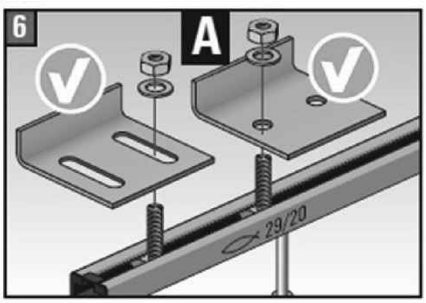


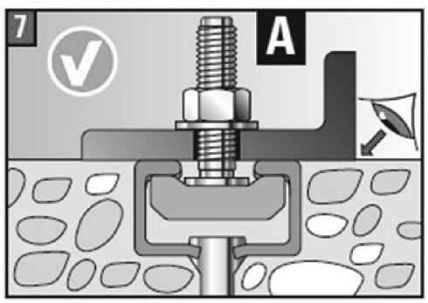


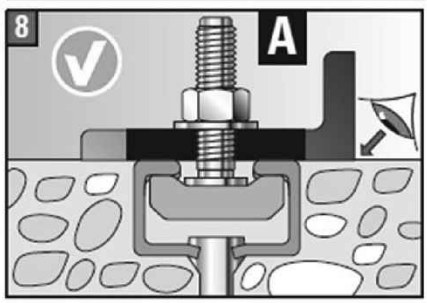


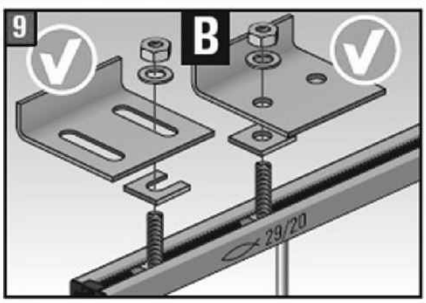


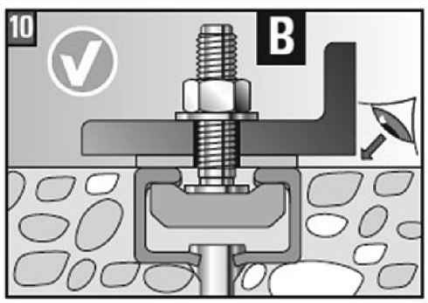


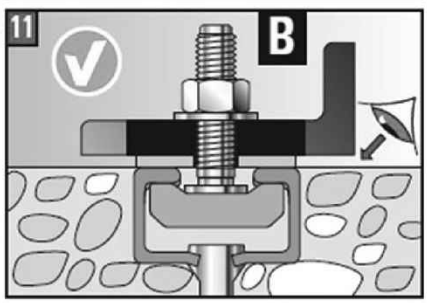


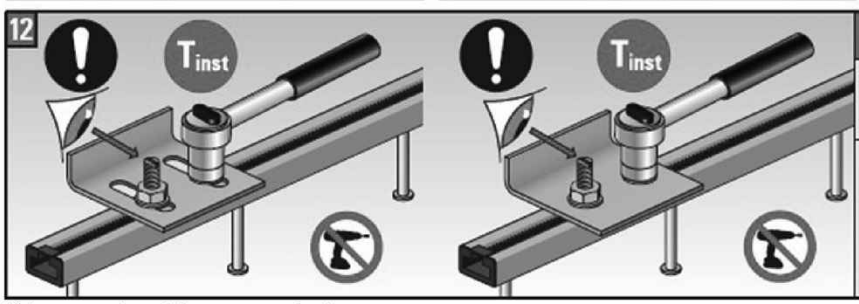


| FBC-S- | FES- | T inst[1] [Nm] | M12 | M16 |
|---|---|---|---|---|
| 2920 | H-S-29/20 | A | 80 | - |
| | | B | 80 | - |
| 3823[2] | H-S-38/23 | A | 80 | 100 |
| | | B | 80 | 100 |
| | C-38/17 | A | 40 | 50 |
| | | B | 80 | 100 |

[1] $T_{inst}$ must not be exceeded.
[2] Applies to all materials (8.8 and A4-70).

**fischer Anchor Channel FES with fischer Channel Bolts FBC**

**Intended Use**
Installation instruction for Serrated fischer Channel Bolts FBC-S

# Notching channel bolt FBC-N

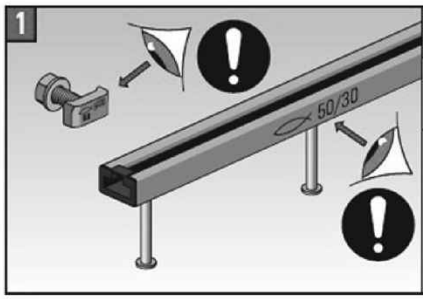


| ⊥ | T |
|---|---|
| FBC-N-4022 | 40/22 |
| FBC-N-5030 | 50/30<br>52/34 |

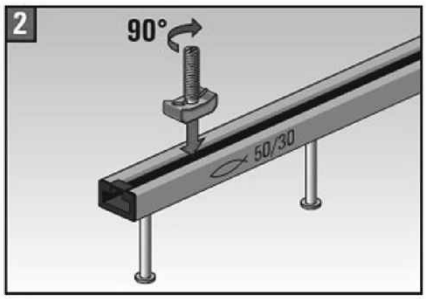


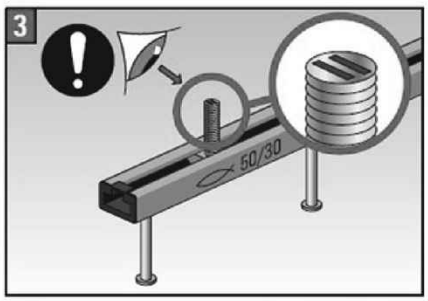


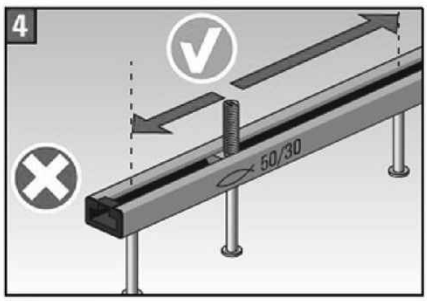


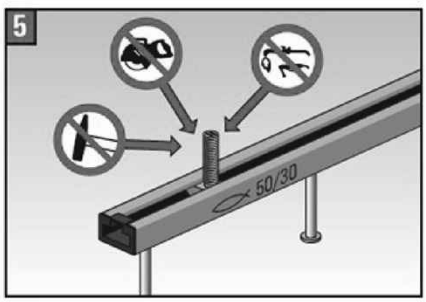


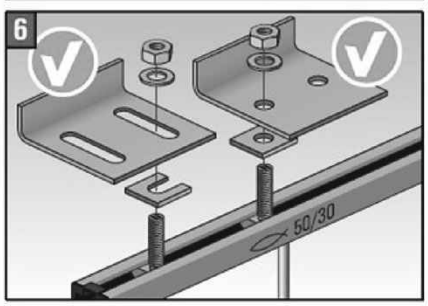


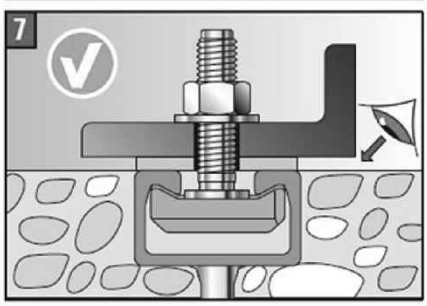


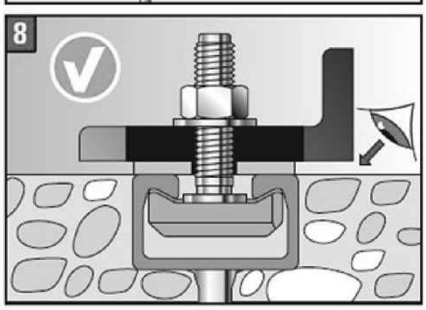


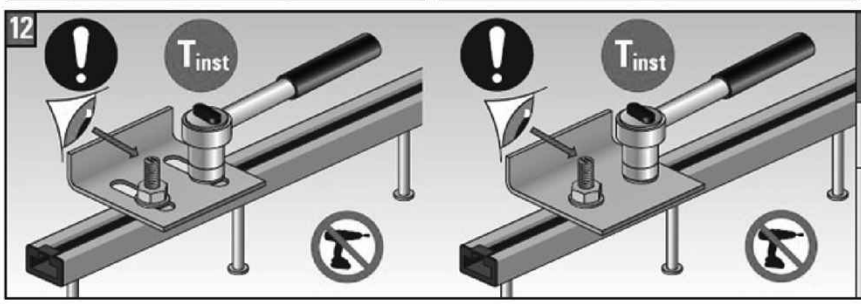


| FBC-N- | FES- | $T_{inst}$[1] [Nm] | | |
|---|---|---|---|---|
| | | M12 | M16 | M20 |
| 4022 | H-(I-)4022(-P) | - | 200 | - |
| 5030 | H-(I-)5030(-P) | - | 200 | 400 |
| | H-(I-)52/34 | - | 200 | 400 |

[1)] $T_{inst}$ must not be exceeded.

**Table C1.1: Characteristic resistances under tension load – steel failure of hot-rolled anchor channels**

| Anchor Channel FES-H- | | | S-29/20 | S-38/23<br>S-38/23-A4 | 40/22<br>40/22-P<br>I-40/22 | 50/30<br>50/30-P<br>I-50/30 | 52/34<br>I-52/34 |
|---|---|---|---|---|---|---|---|
| **Steel failure: Anchor** | | | | | | | |
| Characteristic resistance | $N_{Rk,s,a}$ | [kN] | 25,0 | 31,0<br>40,0 | 20,0<br>42,0<br>35,0 | 31,0<br>44,0<br>44,0 | 55,0<br>70,4 |
| Partial factor | $\gamma_{Ms}$ 1) | [-] | 1,8 | | | | |
| **Steel failure: Connection between anchor and channel** | | | | | | | |
| Characteristic resistance | $N_{Rk,s,c}$ | [kN] | 25,0 | 30,3<br>40,0 | 20,0<br>40,1<br>38,0 | 31,0<br>44,0<br>40,0 | 55,0<br>70,4 |
| Partial factor | $\gamma_{Ms}$ 1) | [-] | 1,8 | | | | |
| **Steel failure: Local flexure of channel lips** | | | | | | | |
| Characteristic spacing of channel bolts for $N_{Rk,s,l}$ | $s_{l,N}$ | [mm] | 60 | 76 | 80<br>80<br>80 | 100<br>100<br>100 | 105<br>105 |
| Characteristic resistance | $N^0_{Rk,s,l}$ | [kN] | 25,0 | 30,3<br>45,0 | 38,0<br>42,0<br>38,0 | 43,0<br>52,0<br>43,0 | 72,0<br>72,0 |
| Partial factor | $\gamma_{Ms}$ 1) | [-] | 1,8 | | | | |

1) In absence of other national regulations.

**Table C1.2: Characteristic resistances under tension load – steel failure of cold-formed anchor channels**

| Anchor Channel FES-C- | | | 28/15 | 38/17 | 40/25 | 49/30 | 54/33 |
|---|---|---|---|---|---|---|---|
| **Steel failure: Anchor** | | | | | | | |
| Characteristic resistance | $N_{Rk,s,a}$ | [kN] | 9,0 | 20,0 | 20,0 | 31,0 | 55,0 |
| Partial factor | $\gamma_{Ms}$ 1) | [-] | 1,8 | | | | |
| **Steel failure: Connection between anchor and channel** | | | | | | | |
| Characteristic resistance | $N_{Rk,s,c}$ | [kN] | 9,0 | 18,0 | 20,0 | 31,0 | 55,0 |
| Partial factor | $\gamma_{Ms}$ 1) | [-] | 1,8 | | | | |
| **Steel failure: Local flexure of channel lips** | | | | | | | |
| Characteristic spacing of channel bolts for $N_{Rk,s,l}$ | $s_{l,N}$ | [mm] | 56 | 76 | 80 | 100 | 108 |
| Characteristic resistance | $N^0_{Rk,s,l}$ | [kN] | 9,0 | 18,0 | 20,0 | 31,0 | 55,0 |
| Partial factor | $\gamma_{Ms}$ 1) | [-] | 1,8 | | | | |

1) In absence of other national regulations.

**Table C2.1: Characteristic flexural resistance of hot rolled channels under tension load**

| Anchor Channel FES-H- | | | S-29/20 | S-38/23<br>S-38/23-A4 | 40/22<br>40/22-P<br>I-40/22 | 50/30<br>50/30-P<br>I-50/30 | 52/34<br>I-52/34 |
|---|---|---|---|---|---|---|---|
| **Steel failure: Flexure of channel** | | | | | | | |
| Characteristic flexural resistance of channel | $M_{Rk,s,flex}$ | [Nm] | 704 | 1.240<br>1.305 | 1.118<br>1.118<br>1.118 | 2.185<br>2.185<br>2.185 | 3.163<br>3.670 |
| Partial factor | $\gamma_{Ms,flex}$ 1) | [-] | 1,15 | | | | |

1) In absence of other national regulations.

**Table C2.2: Characteristic flexural resistance of cold-formed channels under tension load**

| Anchor Channel FES-C- | | | 28/15 | 38/17 | 40/25 | 49/30 | 54/33 |
|---|---|---|---|---|---|---|---|
| **Steel failure: Flexure of channel** | | | | | | | |
| Characteristic flexural resistance of channel | $M_{Rk,s,flex}$ | [Nm] | 310 | 567 | 915 | 1.554 | 2.350 |
| Partial factor | $\gamma_{Ms,flex}$ 1) | [-] | 1,15 | | | | |

1) In absence of other national regulations.

**Table C3.1: Characteristic resistances under tension load – concrete failure of hot rolled anchor channels**

| Anchor Channel FES-H- | | | S-29/20 | S-38/23 | 40/22<br>40/22-P<br>I-40/22 | 50/30<br>50/30-P<br>I-50/30 | 52/34<br>I-52/34 |
|---|---|---|---|---|---|---|---|
| **Concrete failure: Pull-out failure** | | | | | | | |
| Characteristic resistance in cracked concrete C12/15 | $N_{Rk,p}$ | [kN] | 18,4 | 21,2 | 13,6<br>21,2<br>27,0 | 21,2<br>33,2<br>33,8 | 33,2<br>54,0 |
| Characteristic resistance in uncracked concrete C12/15 | $N_{Rk,p}$ | [kN] | 25,7 | 29,7 | 19,0<br>29,7<br>37,8 | 29,7<br>46,5<br>47,3 | 46,5<br>75,6 |
| Increasing factor of $N_{Rk,p}= N_{Rk,p}(C12/15)*\psi_c$ | C16/20<br>C20/25<br>C25/30<br>C30/37<br>C35/45<br>C40/50<br>C45/55<br>C50/60<br>C55/67<br>≥C60/75 | $\psi_c$ [-] | 1,33<br>1,67<br>2,08<br>2,50<br>2,92<br>3,33<br>3,75<br>4,17<br>4,58<br>5,00 | | | | |
| Partial factor | $\gamma_{Mp}=\gamma_{Mc}$ [1)] | [-] | 1,5 | | | | |
| **Concrete failure: Concrete cone failure** | | | | | | | |
| Product factor $k_1$ | $k_{cr,N}$ | [-] | 7,8 | 8,1 | 8,0<br>8,0<br>7,9 | 8,1<br>8,2<br>8,1 | 8,7<br>8,7 |
| Product factor $k_1$ | $k_{ucr,N}$ | [-] | 11,2 | 11,6 | 11,4<br>11,5<br>11,2 | 11,5<br>11,7<br>11,5 | 12,4<br>12,4 |
| Partial factor | $\gamma_{Mc}$ [1)] | [-] | 1,5 | | | | |
| **Concrete failure: Splitting** | | | | | | | |
| Characteristic edge distance | $c_{cr,sp}$ | [mm] | 231 | 291 | 270<br>273<br>237 | 282<br>318<br>282 | 465<br>465 |
| Characteristic spacing | $s_{cr,sp}$ | [mm] | 462 | 582 | 540<br>546<br>474 | 564<br>636<br>564 | 930<br>930 |
| Partial factor | $\gamma_{Msp}=\gamma_{Mc}$ [1)] | [-] | 1,5 | | | | |

[1)] In absence of other national regulations.

**Table C4.1: Characteristic resistances under tension load – concrete failure of cold-formed anchor channels**

| Anchor Channel FES-C- | | | 28/15 | 38/17 | 40/25 | 49/30 | 54/33 |
|---|---|---|---|---|---|---|---|
| **Concrete failure: Pull-out failure** | | | | | | | |
| Characteristic resistance in cracked concrete C12/15 | $N_{Rk,p}$ | [kN] | 7,6 | 13,6 | 13,6 | 21,2 | 33,2 |
| Characteristic resistance in uncracked concrete C12/15 | | | 10,7 | 19,0 | 19,0 | 29,7 | 46,5 |
| Increasing factor of $N_{Rk,p} = N_{Rk,p}(C12/15)*\psi_c$ | C16/20<br>C20/25<br>C25/30<br>C30/37<br>C35/45<br>C40/50<br>C45/55<br>C50/60<br>C55/67<br>≥C60/75 | $\psi_c$ [-] | 1,33<br>1,67<br>2,08<br>2,50<br>2,92<br>3,33<br>3,75<br>4,17<br>4,58<br>5,00 | | | | |
| Partial factor | $\gamma_{Mp}=\gamma_{Mc}$ 1) | [-] | 1,5 | | | | |
| **Concrete failure: Concrete cone failure** | | | | | | | |
| Product factor $k_1$ | $k_{cr,N}$ | [-] | 7,2 | 7,8 | 7,9 | 8,1 | 8,7 |
| | $k_{ucr,N}$ | [-] | 10,3 | 11,2 | 11,2 | 11,5 | 12,4 |
| Partial factor | $\gamma_{Mc}$ 1) | [-] | 1,5 | | | | |
| **Concrete failure: Splitting failure** | | | | | | | |
| Characteristic edge distance | $c_{cr,sp}$ | [mm] | 135 | 228 | 237 | 282 | 465 |
| Characteristic spacing | $s_{cr,sp}$ | [mm] | 270 | 456 | 474 | 564 | 930 |
| Partial factor | $\gamma_{Msp}=\gamma_{Mc}$ 1) | [-] | 1,5 | | | | |

1) In absence of other national regulations.

**Table C5.1: Displacements of hot-rolled anchor channels under tension load**

| Anchor Channel FES-H- | | | S-29/20 | S-38/23<br>S-38/23-A4 | 40/22<br>40/22-P<br>I-40/22 | 50/30<br>50/30-P<br>I-50/30 | 52/34<br>I-52/34 |
|---|---|---|---|---|---|---|---|
| Tension load | N | [kN] | 14,6 | 19,4<br>19,2 | 15,1<br>16,7<br>15,1 | 17,1<br>20,6<br>17,1 | 28,6<br>28,6 |
| Short-term displacement [1)] | $\delta_{N0}$ | [mm] | 2,3 | 1,4<br>1,3 | 2,2<br>2,5<br>2,2 | 1,5<br>1,8<br>1,5 | 1,9<br>1,9 |
| Long-term displacement [1)] | $\delta_{N\infty}$ | [mm] | 4,6 | 2,8<br>2,6 | 4,4<br>5,0<br>4,4 | 3,0<br>3,6<br>3,0 | 3,8<br>3,8 |

[1)] Displacements in midspan of the anchor channel, including slip of channel bolt, deformation of channel lips, bending of the channel and slip of the anchor channel in concrete.

**Table C5.2: Displacements of cold-formed anchor channels under tension load**

| Anchor Channel FES-C- | | | 28/15 | 38/17 | 40/25 | 49/30 | 54/33 |
|---|---|---|---|---|---|---|---|
| Tension load | N | [kN] | 3,6 | 7,1 | 7,9 | 12,3 | 21,8 |
| Short-term displacement [1)] | $\delta_{N0}$ | [mm] | 0,7 | 1,3 | 1,5 | 1,4 | 1,2 |
| Long-term displacement [1)] | $\delta_{N\infty}$ | [mm] | 1,4 | 2,6 | 3,0 | 2,8 | 2,4 |

[1)] Displacements in midspan of the anchor channel, including slip of channel bolt, deformation of channel lips, bending of the channel and slip of the anchor channel in concrete.

**Table C6.1: Characteristic resistances under shear load – steel failure of hot-rolled anchor channels**

| Anchor Channel FES-H- | | | S-29/20 | S-38/23<br>S-38/23-A4 | 40/22<br>40/22-P<br>I-40/22 | 50/30<br>50/30-P<br>I-50/30 | 52/34<br>I-52/34 |
|---|---|---|---|---|---|---|---|
| **Steel failure: Anchor** | | | | | | | |
| Characteristic resistance | $V_{Rk,s,a,y}$ | [kN] | 25,0 | 30,3<br>40,0 | 40,0<br>50,8<br>40,0 | 60,0<br>87,9<br>60,0 | 100<br>100 |
| | $V_{Rk,s,a,x}$ | [kN] | 15,1 | 18,8<br>24,0 | 12,0<br>25,4<br>22,8 | 18,6<br>26,8<br>24,0 | 33,0<br>42,2 |
| Partial factor | $\gamma_{Ms}$ 1) | [-] | 1,8 | | | | |
| **Steel failure: Connection between anchor and channel** | | | | | | | |
| Characteristic resistance | $V_{Rk,s,c,y}$ | [kN] | 25,0 | 30,3<br>40,0 | 40,0<br>50,8<br>40,0 | 60,0<br>87,9<br>60,0 | 100<br>100 |
| | $V_{Rk,s,c,x}$ | [kN] | 15,0 | 18,2<br>24,0 | 12,0<br>25,2<br>22,8 | 18,6<br>26,4<br>24,0 | 33,0<br>42,2 |
| Partial factor | $\gamma_{Ms}$ 1) | [-] | 1,8 | | | | |
| **Steel failure: Local flexure of channel lips** | | | | | | | |
| Characteristic spacing of channel bolts for $V_{Rk,s,l}$ | $s_{l,V}$ | [mm] | 60 | 76 | 80<br>80<br>80 | 100<br>100<br>100 | 108<br>108 |
| Characteristic resistance | $V^0_{Rk,s,l,y}$ | [kN] | 25,0 | 30,3<br>40,0 | 40,0<br>50,8<br>40,0 | 60,0<br>87,9<br>60,0 | 100<br>100 |
| Partial factor | $\gamma_{Ms}$ 1) | [-] | 1,8 | | | | |

1) In absence of other national regulations.

**Table C7.1: Characteristic resistances under shear load – steel failure of cold-formed anchor channels**

| Anchor Channel FES-C- | | | 28/15 | 38/17 | 40/25 | 49/30 | 54/33 |
|---|---|---|---|---|---|---|---|
| **Steel failure: Anchor** | | | | | | | |
| Characteristic resistance | $V_{Rk,s,a,y}$ | [kN] | 9 | 18 | 20 | 31 | 55 |
| | $V_{Rk,s,a,x}$ | [kN] | -[2)] | -[2)] | -[2)] | -[2)] | -[2)] |
| Partial factor | $\gamma_{Ms}$ [1)] | [-] | 1,8 | | | | |
| **Steel failure: Connection between anchor and channel** | | | | | | | |
| Characteristic resistance | $V_{Rk,s,c,y}$ | [kN] | 9 | 18 | 20 | 31 | 55 |
| | $V_{Rk,s,c,x}$ | [kN] | -[2)] | -[2)] | -[2)] | -[2)] | -[2)] |
| Partial factor | $\gamma_{Ms}$ [1)] | [-] | 1,8 | | | | |
| **Steel failure: Local flexure of channel lips** | | | | | | | |
| Characteristic spacing of channel bolts for $V_{Rk,s,l}$ | $s_{l,V}$ | [mm] | 56 | 76 | 80 | 100 | 108 |
| Characteristic resistance | $V^0_{Rk,s,l,y}$ | [kN] | 9 | 18 | 20 | 31 | 55 |
| Partial factor | $\gamma_{Ms}$ [1)] | [-] | 1,8 | | | | |

[1)] In absence of other national regulations.
[2)] No performance assessed.

**Table C8.1: Characteristic resistance for shear load in direction of the longitudinal axis of the channel – steel failure**

| Anchor Channel FES-H- | | | | S-29/20 | S-38/23 | 40/22<br>40/22-P<br>I-40/22 | 50/30<br>50/30-P<br>I-50/30 | 52/34<br>I-52/34 |
|---|---|---|---|---|---|---|---|---|
| **Steel failure: Connection between channel lips and channel bolt** | | | | | | | | |
| Characteristic resistance | $V_{Rk,s,l,x}$ | [kN] | FBC-S-29/20-M12-8.8 | 22,5 | -[2] | -[2] | -[2] | -[2] |
| | | | FBC-S-38/23-M12-8.8 | -[2] | 23,2 | -[2] | -[2] | -[2] |
| | | | FBC-S-38/23-M12-A4-70 | -[2] | 29,0 | -[2] | -[2] | -[2] |
| | | | FBC-S-38/23-M16-8.8 | -[2] | 30,3 | -[2] | -[2] | -[2] |
| | | | FBC-S-38/23-M16-A4-70 | -[2] | 29,0 | -[2] | -[2] | -[2] |
| | | | FBC-N-40/22-M16-8.8 | -[2] | -[2] | 14,0 | -[2] | -[2] |
| | | | FBC-N-50/30-M16-8.8 | -[2] | -[2] | -[2] | 10,7 | 10,7 |
| | | | FBC-N-50/30-M20-8.8 | -[2] | -[2] | -[2] | 21,0 | 21,0 |
| Installation factor | $\gamma_{inst}$ [1] | [-] | | 1,2 | 8.8: 1,0<br>A4-70: 1,2 | 1,2 | M16: 1,2<br>M20: 1,4 | M16: 1,2<br>M20: 1,4 |

[1] In absence of other national regulations.
[2] No performance assessed.

**Table C8.2: Characteristic resistances of the hot-rolled anchor channel under shear load – concrete failure**

| Anchor Channel FES-H- | | | S-29/20 | S-38/23 | 40/22<br>40/22-P<br>I-40/22 | 50/30<br>50/30-P<br>I-50/30 | 52/34<br>I-52/34 |
|---|---|---|---|---|---|---|---|
| **Concrete failure: Pry-out failure** | | | | | | | |
| Product factor | $k_8$ | [-] | 2,0 | 2,0 | 2,0 | 2,0 | 2,0 |
| Partial factor | $\gamma_{Mc}$ [1] | [-] | 1,5 | | | | |
| **Concrete failure: Concrete edge failure** | | | | | | | |
| Product factor $k_{12}$ | $k_{cr,V}$ | [-] | 7,5 | 7,5 | 7,5 | 7,5 | 7,5 |
| | $k_{ucr,V}$ | [-] | 10,5 | 10,5 | 10,5 | 10,5 | 10,5 |
| Partial factor | $\gamma_{Mc}$ [1] | [-] | 1,5 | | | | |

[1] In absence of other national regulations.

**Table C8.3: Characteristic resistances of the cold-formed anchor channel under shear load – concrete failure**

| Anchor Channel FES-C | | | 28/15 | 38/17 | 40/25 | 49/30 | 54/33 |
|---|---|---|---|---|---|---|---|
| **Concrete failure: Pry-out failure** | | | | | | | |
| Product factor | $k_8$ | [-] | 1 | 2 | 2 | 2 | 2 |
| Partial factor | $\gamma_{Mc}$ [1] | [-] | 1,5 | | | | |
| **Concrete failure: Concrete edge failure** | | | | | | | |
| Product factor $k_{12}$ | $k_{cr,V}$ | [-] | 5,8 | 7,5 | 7,5 | 7,5 | 7,5 |
| | $k_{ucr,V}$ | [-] | 8,1 | 10,5 | 10,5 | 10,5 | 10,5 |
| Partial factor | $\gamma_{Mc}$ [1] | [-] | 1,5 | | | | |

[1] In absence of other national regulations.

**Table C9.1: Displacements under shear load**

| Anchor Channel FES- | | | C-28/15 | C-38/17 | H-S-29/20 | H-S-38/23<br>H-S-38/23-A4 | C-40/25<br>H-40/22<br>H-40/22-P<br>H-I-40/22 | C-49/30<br>H-50/30<br>H-50/30-P<br>H-I-50/30 | C-54/33<br>H-52/34<br>H-I-52/34 |
|---|---|---|---|---|---|---|---|---|---|
| Shear load perpendicular to the longitudinal axis of the channel | $V_y$ | [kN] | 3,6 | 7,1 | 14,6 | 23,0<br>23,0 | 7,9<br>15,9<br>20,2<br>15,9 | 12,3<br>23,8<br>34,9<br>23,8 | 21,8<br>39,7<br>39,7 |
| Short-term displacement [1] | $\delta_{V,y,0}$ | [mm] | 0,7 | 1,3 | 2,3 | 3,8<br>2,8 | 1,5<br>2,1<br>2,2<br>2,1 | 1,4<br>3,7<br>2,1<br>3,7 | 1,2<br>4,0<br>4,0 |
| Long-term displacement [1] | $\delta_{V,y,\infty}$ | [mm] | 1,1 | 2,0 | 3,5 | 5,7<br>4,2 | 2,3<br>3,2<br>3,3<br>3,2 | 2,1<br>5,5<br>3,2<br>5,5 | 1,8<br>5,9<br>5,9 |
| Shear load in direction of the longitudinal axis of the channel | $V_x$ | [kN] | -[3] | -[3] | 16,6 | 15,4<br>21,2 | -[3]<br>4,6<br>4,6<br>4,6 | -[3]<br>[4]<br>[4]<br>[4] | -[3]<br>[4]<br>[4] |
| Short-term displacement [2] | $\delta_{V,x,0}$ | [mm] | -[3] | -[3] | 1,9 | 0,8<br>2,0 | -[3]<br>0,9<br>0,9<br>0,9 | -[3]<br>[5]<br>[5]<br>[5] | -[3]<br>[5]<br>[5] |
| Long-term displacement [2] | $\delta_{V,x,\infty}$ | [mm] | -[3] | -[3] | 2,9 | 1,2<br>3,0 | -[3]<br>1,4<br>1,4<br>1,4 | -[3]<br>[6]<br>[6]<br>[6] | -[3]<br>[6]<br>[6] |

[1] Displacements in midspan of the anchor channel, including slip of channel bolt, deformation of channel lips and slip of the anchor channel in concrete.
[2] Displacements of the anchor channel, including slip of channel bolt, deformation of channel lips and slip of the anchor channel in concrete.
[3] No performance assessed.
[4] For FBC-N-5030-M16 $V_x$ = 3,5 kN, for FBC-N-5030-M20 $V_x$ = 6,7 kN.
[5] For FBC-N-5030-M16 $\delta_{V,x,0}$ = 0,4 mm, for FBC-N-5030-M20 $\delta_{V,x,0}$ = 0,1 mm.
[6] For FBC-N-5030-M16 $\delta_{V,x,\infty}$ = 0,6 mm, for FBC-N-5030-M20 $\delta_{V,x,\infty}$ = 0,2 mm.

**Table C9.2: Characteristic resistances under combined tension and shear load**

| Anchor Channel FES- | | | C-28/15 | C-38/17 | H-S-29/20 | H-S-38/23 | C-40/25<br>H-40/22<br>H-40/22-P<br>H-I-40/22 | C-49/30<br>H-50/30<br>H-50/30-P<br>H-I-50/30 | C-54/33<br>H-52/34<br>H-I-52/34 |
|---|---|---|---|---|---|---|---|---|---|
| **Steel failure: Local flexure of channel lips and flexure of channel** | | | | | | | | | |
| Product factor | $k_{13}$ | [-] | according to EN 1992-4:2018, 7.4.3.1 | | | | | | |
| **Steel failure: Anchor and connection between anchor and channel** | | | | | | | | | |
| Product factor | $k_{14}$ | [-] | according to EN 1992-4:2018, 7.4.3.1 | | | | | | |

**Table C10.1: Characteristic resistances under tension and shear load – steel failure of channel bolts**

| Channel bolt thread diameter | | | | M8 | M10 | M12 | M16 | M20 |
|---|---|---|---|---|---|---|---|---|
| **Steel failure: Special screw 8.8** | | | | | | | | |
| Characteristic tensile resistance | FBC-28/15 | $N_{Rk,s}$ | [kN] | 29,2 | 33,0 | 45,1 | -[2] | -[2] |
| | FBC-38/17 | | | -[2] | 46,4 | 67,4 | 89,9 | -[2] |
| | FBC-S-29/20 | | | -[2] | -[2] | 48,5 | -[2] | -[2] |
| | FBC-S-38/23 | | | -[2] | -[2] | 67,4 | 71,5 | -[2] |
| | FBC-40/22 | | | -[2] | 46,4 | 55,1 | 82,2 | -[2] |
| | FBC-N-40/22 | | | -[2] | -[2] | -[2] | 100,9 | -[2] |
| | FBC-50/30 | | | -[2] | 46,4 | 67,4 | 96,5 | 127,2 |
| | FBC-N-50/30 | | | -[2] | -[2] | -[2] | 113,5 | 134,0 |
| Partial factor | | $\gamma_{Ms}$ [1] | [-] | 1,5 | | | | |
| **Steel failure: Special screw A4-70** | | | | | | | | |
| Characteristic tensile resistance | FBC-S-38/23 | $N_{Rk,s}$ | [kN] | -[2] | -[2] | 59,0 | 71,5 | -[2] |
| | FBC-40/22 | | | -[2] | -[2] | 54,9 | 102,8 | -[2] |
| | FBC-50/30 | | | -[2] | -[2] | 59,0 | 82,8 | 163,1 |
| Partial factor | | $\gamma_{Ms}$ [1] | [-] | 1,87 | | | | |
| **Characteristic shear resistance 8.8** | | $V_{Rk,s}$ | [kN] | 14,6 | 23,2 | 33,7 | 62,8 | 98,0 |
| **Characteristic shear resistance A4-70** | | | | -[2] | -[2] | 35,4 | 65,9 | 102,9 |
| Partial factor (shear loads 8.8) | | $\gamma_{Ms}$ [1] | [-] | 1,25 | | | | |
| Partial factor (shear loads A4-70) | | $\gamma_{Ms}$ [1] | [-] | 1,56 | | | | |

[1] In absence of other national regulations.
[2] No performance assessed.

**Table C11.1: Characteristic resistances under shear load with lever arm – steel failure of channel bolts**

| Channel bolt [2] thread diameter | | | | | M8 | M10 | M12 | M16 | M20 |
|---|---|---|---|---|---|---|---|---|---|
| **Steel failure** | | | | | | | | | |
| Characteristic flexural resistance | $M^0_{Rk,s}$ | [Nm] | FBC-(S-) (N-) | 8.8 | 30,0 | 59,8 | 104,8 | 266,4 | 519,3 |
| | | | | A4-70 | -[3] | -[3] | 91,7 | 233,1 | 454,4 |
| Partial factor | $\gamma_{Ms}$ [1] | [-] | FBC-(S-) (N-) | 8.8 | 1,25 | | | | |
| | | | | A4-70 | 1,56 | | | | |
| Internal lever arm | a | [mm] | FBC-28/15 | 8.8 | 16,7 | 18,1 | 19,4 | -[3] | -[3] |
| | | | FBC-38/17 | 8.8 | -[3] | 22,7 | 24,0 | 26,0 | -[3] |
| | | | FBC-S-29/20 | 8.8 | -[3] | -[3] | 20,0 | -[3] | -[3] |
| | | | FBC-S-38/23 | 8.8<br>A4-70 | -[3] | -[3] | 22,4 | 25,7 | -[3] |
| | | | FBC-40/22 | 8.8 | -[3] | 23,5 | 24,8 | 26,8 | -[3] |
| | | | FBC-N-40/22 | 8.8 | -[3] | -[3] | -[3] | 26,9 | -[3] |
| | | | FBC-50/30 | 8.8 | -[3] | 27,7 | 29,0 | 31,0 | 33,3 |
| | | | FBC-N-50/30 | 8.8 | -[3] | -[3] | -[3] | 31,5 | 33,9 |
| | | | FBC-40/22 | A4-70 | -[3] | -[3] | 24,7 | 26,7 | -[3] |
| | | | FBC-50/30 | A4-70 | -[3] | -[3] | 28,8 | 30,9 | 33,1 |

[1] In absence of other national regulations.

[2] Materials according to Annex A7, Table A7.1.

[3] No performance assessed.

The characteristic flexure resistance according to Table C11.1 is limited as follows:

$M^0_{Rk,s} \leq 0{,}5 \cdot N^0_{Rk,s,l} \cdot a$ ($N^0_{Rk,s,l}$ according to Annex C1, Table C1.1 and Table C1.2)

$M^0_{Rk,s} \leq 0{,}5 \cdot N_{Rk,s} \cdot a$ ($N_{Rk,s}$ according to Annex C10, Table 10.1)

a = Internal lever arm according to Table C11.1

$T_s$ = Tension force acting on the channel lips

$C_s$ = Compression force acting on the channel lips

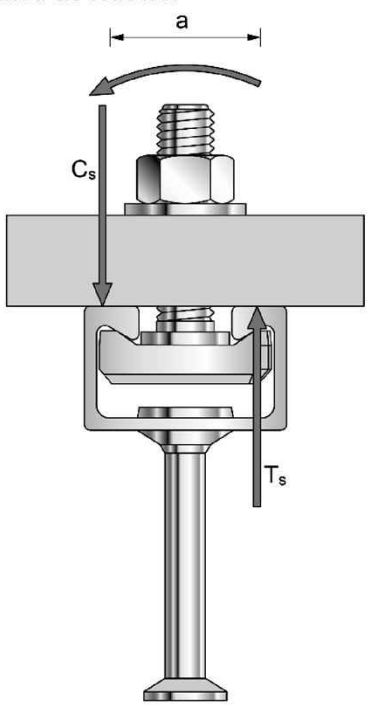

**Table 12.1: Combination of anchor channels and channel bolts under seismic load (performance category C1)**

| Anchor channel FES- | Channel Bolt FBC- | Thread diameter | Steel grade | Corrosion protection |
|---|---|---|---|---|
| H-S-38/23 | S-38/23 | M12<br>M16 | 8.8 | G[1)]<br>F[2)] |
| H-50/30<br>H-52/34 | N-50/30 | M20 | | |

[1)] Electroplated.

[2)] Hot-dip galvanised.

**Table C12.2: Characteristic resistance under seismic tension load- steel failure of anchor channels (performance category C1)**

| Anchor Channel FES-H- | | | S-38/23 | H50/30 | H52/34 |
|---|---|---|---|---|---|
| **Steel failure: Anchor** | | | | | |
| Characteristic resistance | $N_{Rk,s,a,eq}$ | [kN] | 31,0 | 31,0 | 31,0 |
| Partial factor | $\gamma_{Ms,eq}$ [1)] | [-] | 1,8 | | |
| **Steel failure: Connection between anchor and channel** | | | | | |
| Characteristic resistance | $N_{Rk,s,c,eq}$ | [kN] | 30,3 | 31,0 | 31,0 |
| Partial factor | $\gamma_{Ms,eq}$ [1)] | [-] | 1,8 | | |
| **Steel failure: Local flexure of channel lips** | | | | | |
| Characteristic resistance | $N^0_{Rk,s,l,eq}$ | [kN] | 30,3 | 43,0 | 43,0 |
| Partial factor | $\gamma_{Ms,eq}$ [1)] | [-] | 1,8 | | |

[1)] In absence of other national regulations.

**Table 12.3: Characteristic flexural resistance of the channel under seismic tension load (performance category C1)**

| Anchor Channel FES- | | | H-S-38/23 | H-50/30 | H-52/43 |
|---|---|---|---|---|---|
| **Steel failure: Flexure of channel** | | | | | |
| Characteristic flexural resistance of channel | $M_{Rk,s,flex,eq}$ | [Nm] | 1.240 | 2.185 | 2.185 |
| Partial factor | $\gamma_{Ms,flex,eq}$ [1)] | [-] | 1,15 | | |

[1)] In absence of other national regulations.

**Table C13.1: Characteristic resistance under seismic shear load- steel failure of anchor channels (performance category C1)**

| Anchor Channel FES- | | | H-S-38/23 | H-50/30 | H-52/34 |
|---|---|---|---|---|---|
| **Steel failure: Anchor** | | | | | |
| Characteristic resistance | $V_{Rk,s,a,y,eq}$ | [kN] | 30,3 | 60,0 | 60,0 |
| | $V_{Rk,s,a,x,eq}$ | [kN] | 18,8 | 18,6 | 18,6 |
| Partial factor | $\gamma_{Ms,eq}$ [1)] | [-] | 1,8 | | |
| **Steel failure: Connection between anchor and channel** | | | | | |
| Characteristic resistance | $V_{Rk,s,c,y,eq}$ | [kN] | 30,3 | 60,0 | 60,0 |
| | $V_{Rk,s,c,x,eq}$ | [kN] | 18,2 | 18,6 | 18,6 |
| Partial factor | $\gamma_{Ms,eq}$ [1)] | [-] | 1,8 | | |
| **Steel failure: Local flexure of channel lips** | | | | | |
| Characteristic resistance | $V^0_{Rk,s,l,y,eq}$ | [kN] | 30,3 | 60,0 | 60,0 |
| Partial factor | $\gamma_{Ms,eq}$ [1)] | [-] | 1,8 | | |

[1)] In absence of other national regulations.

**Table C13.2: Characteristic resistance for seismic shear load in direction of the longitudinal axis of the channel - steel failure (performance category C1)**

| Anchor Channel FES- | | | | H-S-38/23 | H-50/30 | H-52/34 |
|---|---|---|---|---|---|---|
| **Steel failure: Connection between channel lips and channel bolt** | | | | | | |
| Characteristic resistance | $V_{Rk,s,l,x,eq}$ | [kN] | FBC-S-38/23-M12-8.8 | 23,2 | -[2)] | -[2)] |
| | | | FBC-S-38/23-M16-8.8 | 23,2 | -[2)] | -[2)] |
| | | | FBC-N-50/30-M20-8.8 | -[2)] | 21,0 | 21,0 |
| Installation factor | $\gamma_{inst}$ [1)] | [-] | | 1,0 | 1,4 | 1,4 |

[1)] In absence of other national regulations.
[2)] No performance assessed.

**Table C14.1: Characteristic resistance under seismic tension and seismic shear load – steel failure of chancel bolt (performance category C1)**

| Channel bolt thread diameter | | | | M12 | M16 | M20 |
|---|---|---|---|---|---|---|
| **Steel failure: Special screw** | | | | | | |
| Characteristic tensile resistance | FBC-S-38/23 | $N_{Rk,s,eq}$ | [kN] | 67,4 | 67,4 | -[2] |
| | FBC-N-50/30 | | | -[2] | -[2] | 134,0 |
| Partial factor | | $\gamma_{Ms}$ [1] | [-] | 1,5 | | |
| **Characteristic shear resistance 8.8** | | $V_{Rk,s,eq}$ | [kN] | 33,7 | 33,7 | 98,0 |
| Partial factor (shear loads 8.8) | | $\gamma_{Ms}$ [1] | [-] | 1,25 | | |

[1] In absence of other national regulations.
[2] No performance assessed.

**Table C15.1: Characteristic resistance under fire exposure – steel failure**

| Channel bolt thread diameter | | | | | | M8 | M10 | M12 | M16 | M20 |
|---|---|---|---|---|---|---|---|---|---|---|
| **Steel failure:** | | **Anchor, connection between anchor and channel, local flexure of channel lips, channel bolts** | | | | | | | | |
| Characteristic resistance under fire exposure [3] | FES-H-S-29/2 | FBC-S-29/20 | R30<br>R60<br>R90<br>R120 | $N_{Rk,s,fi}$ = $V_{Rk,s,y,fi}$ | [kN] | - [2] | - [2] | 2,5<br>2,4<br>1,7<br>1,4 | - [2] | - [2] |
| | FES-H-S-38/23 | FBC-S-38/23 | R30<br>R60<br>R90<br>R120 | | | - [2] | - [2] | 4,6<br>4,1<br>2,8<br>2,1 | 4,6<br>4,1<br>2,8<br>2,1 | - [2] |
| | FES-H(-I)-40/22(-P) | FBC-40/22 | R30<br>R60<br>R90<br>R120 | | | - [2] | 1,3<br>1,0<br>0,7<br>0,6 | 2,0<br>1,7<br>1,4<br>1,3 | 4,5<br>3,4<br>2,3<br>1,7 | - [2] |
| | FES-H(-I)-50/30(-P) | FBC(-N)-50/30 | R30<br>R60<br>R90<br>R120 | | | - [2] | 1,3<br>1,0<br>0,7<br>0,6 | 2,0<br>1,7<br>1,4<br>1,3 | 5,2<br>4,2<br>3,2<br>2,7 | 5,2<br>4,2<br>3,2<br>2,7 |
| | FES-H(-I)-52/34 | FBC(-N)-50/30 | R30<br>R60<br>R90<br>R120 | | | - [2] | 1,3<br>1,0<br>0,7<br>0,6 | 4,6<br>4,1<br>2,8<br>2,1 | 5,2<br>4,2<br>3,2<br>2,7 | 8,0<br>6,5<br>5,0<br>4,2 |
| | FES-C-28/15 | FBC-28/15 | R30<br>R60<br>R90<br>R120 | | | 0,6<br>0,6<br>0,5<br>0,4 | 1,3<br>1,0<br>0,7<br>0,6 | 1,3<br>1,0<br>0,7<br>0,6 | - [2] | - [2] |
| | FES-C-38/17 | FBC-38/17<br>FBC-S-38/23-M16 | R30<br>R60<br>R90<br>R120 | | | - [2] | 1,3<br>1,0<br>0,7<br>0,6 | 1,3<br>1,0<br>0,7<br>0,6 | 3,5<br>2,8<br>1,8<br>1,3 | - [2] |
| | FES-C-40/25 | FBC-40/22 | R30<br>R60<br>R90<br>R120 | | | - [2] | 1,8<br>1,5<br>1,1<br>0,8 | 3,0<br>2,4<br>1,7<br>1,4 | 3,5<br>2,8<br>1,8<br>1,3 | - [2] |
| | FES-C-49/30 | FBC-50/30 | R30<br>R60<br>R90<br>R120 | | | - [2] | 1,3<br>1,0<br>0,7<br>0,6 | 2,9<br>2,4<br>1,8<br>1,6 | 3,1<br>2,5<br>1,9<br>1,6 | 3,1<br>2,5<br>1,9<br>1,6 |
| | FES-C-54/33 | FBC-50/30 | R30<br>R60<br>R90<br>R120 | | | - [2] | 1,3<br>1,0<br>0,7<br>0,6 | 2,9<br>2,4<br>1,8<br>1,6 | 3,1<br>2,5<br>1,9<br>1,6 | 3,1<br>2,5<br>1,9<br>1,6 |
| Partial factor | | | | $\gamma_{Ms,fi}$ [1] | [-] | 1,0 | | | | |

[1] In absence of other national regulations.
[2] No performance assessed.
[3] Values also valid for stainless steel A4-70.

**Table C16.1: Minimum axis distance of the reinforcement under fire exposure**

| Anchor Channel FES- | | | C-28/15 | C-38/17 | H-S-29/20 | H-S-38/23 | C-40/25<br>H-40/22<br>H-40/22-P<br>H-I-40/22 | C-49/30<br>H50/30<br>H-50/30-P<br>H-I-50/30 | C-54/33<br>H-52/34<br>H-I-52/34 |
|---|---|---|---|---|---|---|---|---|---|
| Minimum axis distance | R30 | a [mm] | 35 | 35 | 35 | 35 | 35 | 35 | 50 |
| | R60 | | 35 | 35 | 35 | 35 | 35 | 35 | 50 |
| | R90 | | 45 | 45 | 45 | 45 | 45 | 45 | 50 |
| | R120 | | 60 | 60 | 60 | 60 | 60 | 60 | 65 |

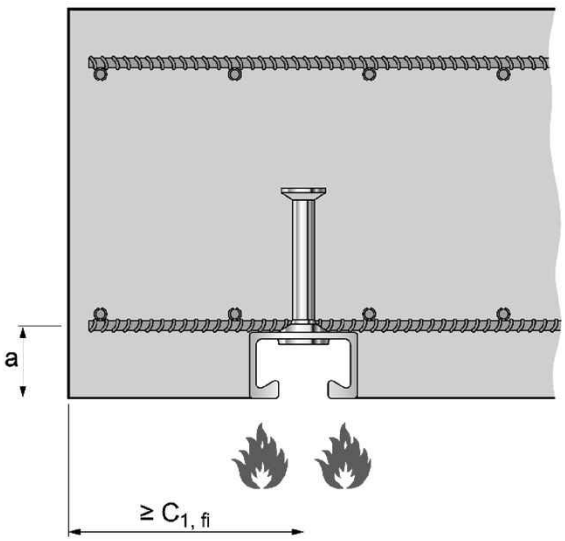


**Fire exposure from one side only.**

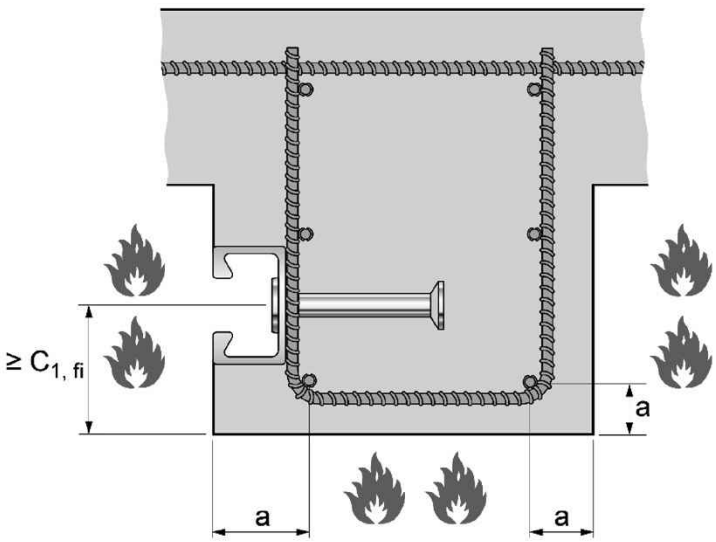


**Fire exposure from more than one side.**