PRESTANDADEKLARATION

DoP 0292

för fischer Drop-in Anchor EA II (Metallankare för användning i betong) SV

1. Produkttypens unika identifikationskod: **DoP 0292**
2. Avsedd användning/avsedda användningar: **Efterinstallerat fästelement för användning i betong i icke-strukturella system, se bilaga, särskilt bilagor B1-B4.**
3. Tillverkare: **fischerwerke GmbH & Co. KG, Klaus-Fischer-Str. 1, 72178 Waldachtal, Tyskland**
4. Tillverkarens representant: **–**
5. System för bedömning och fortlöpande kontroll av prestanda: **2+**
6. Europeiskt bedömningsdokument: **EAD 330747-00-0601**
   Europeisk teknisk bedömning: **ETA-07/0142; 2021-09-24**
   Tekniskt bedömningsorgan: **DIBt- Deutsches Institut für Bautechnik**
   Anmält/anmälda organ: **2873 TU Darmstadt**
7. Angiven prestanda:

Säkerhet vid användning (BWR 4)

Karakteristisk bärförmåga för spänning (för statisk och kvasi-statisk belastning):

Stålets motståndskraft:	NPD	
Motstånd mot att skruven dras ut:	NPD	
Motstånd i betongkonen:	NPD	
Kraftighet:	Bilagor C1, C2	
Minsta kant- och axelavstånd:	Bilagor B2, C2	
Kantavstånd för att slippa sprickor under last:	NPD	

Karakteristisk bärförmåga för skjuvning (för statisk och kvasi-statisk belastning):

Motstånd i stålet (tvärlast):	Bilagor C1, C2	$V_{Rk,s}$=NPD; k_7=NPD
Motstån mot fläkning:	NPD	
Mostånd mot skador i betong:	NPD	

Karaktäristiskt motståndskraft för laster i alla riktningar och motstånd mot fel. En förenklad design:

Karaktäristisk motståndskraft:	Bilagor C1, C2

Hållbarhet:

Hållbarhet:	Bilagor A3, B1

Säkerhet vid brand (BWR 2)

Reaktion vid brand:	Klass (A1)

Motståndskraft mot eld:

Brandmotstånd i stålet (tvärlast):	Bilaga C3
Brandmotstånd mot utdrag (draglast):	Bilaga C3
Brandmotstånd i stålet (tvärlast):	Bilaga C3

8. Lämplig teknisk dokumentation och/eller särskild teknisk dokumentation: **–**

Prestandan för ovanstående produkt överensstämmer med den angivna prestandan. Denna prestandadeklaration har utfärdats i enlighet med förordning (EU) nr 305/2011 på eget ansvar av den tillverkare som anges ovan.

Undertecknad på tillverkarens vägnar av:

Dr.-Ing. Oliver Geibig, Managing Director Business Units & Engineering

Jürgen Grün, Managing Director Chemistry & Quality

Tumlingen, 2021-09-30

Denna DoP har förberetts på olika språk. I händelse av tvist om tolkningen ska den engelska versionen alltid råda.

Bilagan innehåller frivilliga och kompletterande information på engelska som överskrider (det specifika språkets) lagkrav.

Specific Part

1 Technical description of the product

The fischer drop-in anchor EA II is an anchor made of galvanised or stainless steel which is placed into a drilled hole and anchored by deformation-controlled expansion.

The fixture shall be anchored with a fastening screw or threaded rod according to Annex B 5.

The product description is given in Annex A.

2 Specification of the intended use in accordance with the applicable European Assessment Document

The performances given in Section 3 are only valid if the anchor is used in compliance with the specifications and conditions given in Annex B.

The verifications and assessment methods on which this European Technical Assessment is based lead to the assumption of a working life of the anchor of at least 50 years. The indications given on the working life cannot be interpreted as a guarantee given by the producer, but are to be regarded only as a means for choosing the right products in relation to the expected economically reasonable working life of the works.

3 Performance of the product and references to the methods used for its assessment

3.1 Safety in case of fire (BWR 2)

Essential characteristic	Performance
Reaction to fire	Class A1
Resistance to fire	See Annex C 3

3.2 Safety and accessibility in use (BWR 4)

Essential characteristic	Performance
Characteristic resistance for all load directions and modes of failure for simplified design	See Annex C 1 and C 2
Durability	See Annex B 1

4 Assessment and verification of constancy of performance (AVCP) system applied, with reference to its legal base

In accordance with European Assessment Document EAD No. 330747-00-0601, the applicable European legal act is: [97/161/EC].

The system to be applied is: 2+

Only for use for redundant non-structural systems according to EN 1992-4:2018

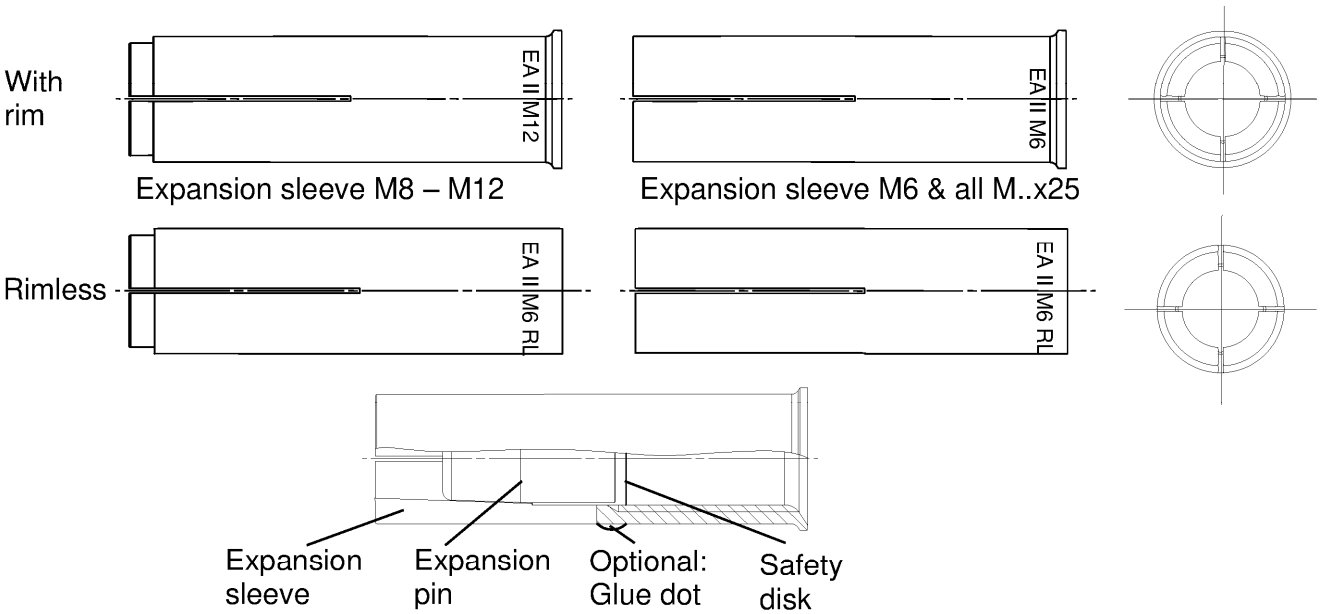

Intended use in concrete

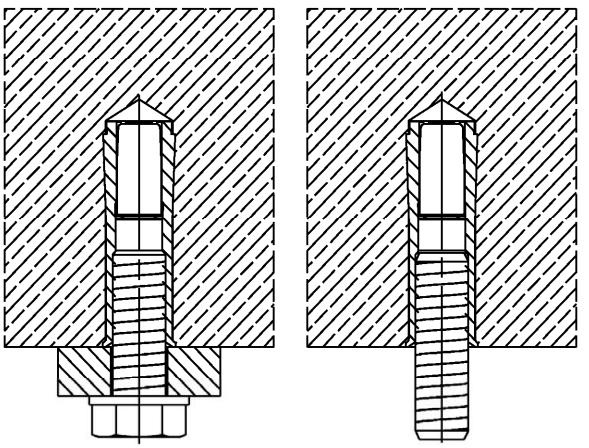

Intended use in precast pre-stressed hollow concrete slabs (w/e ≤ 4,2) with a flange thickness d_b ≥ 35 mm (or 30 mm → see Annex C2) and only for h_{ef} = 25 mm

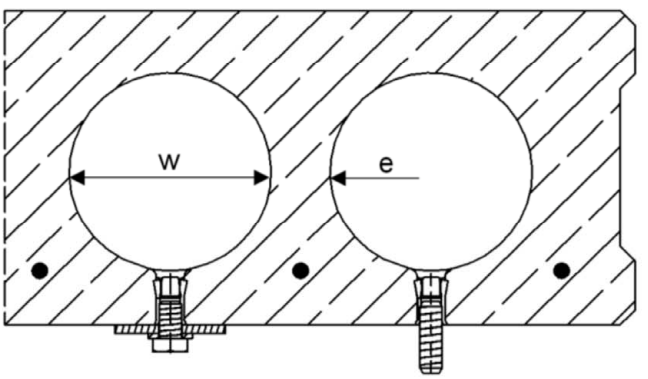

(Fig. not to scale)

fischer drop-in anchor EA II

Product description
Installed condition
Anchor types

Annex A 1

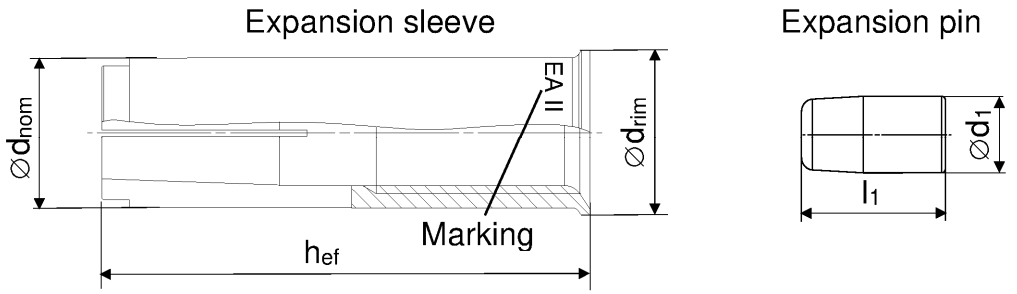

Table A2.1: Anchor size

Anchor size EA II [mm]	M6x25	M6x30	M8x25	M8x30	M8x40	M10x25	M10x30	M10x40	M12x25	M12x50	M12 D
h_{ef}	25	30	25	30	40	25	30	40	25	50	50
$\varnothing d_{nom}$	8		10			12			15		16
$\varnothing d_{rim}$ (not applicable for EA II RL)	9,5		11,5			13,5			16,5		17,5
$\varnothing d_1$	5		6,5			8,5	8		10		
l_1	9	14	8	13,5		9	13,5	18,5	10,5	18,5	

Distinctive feature

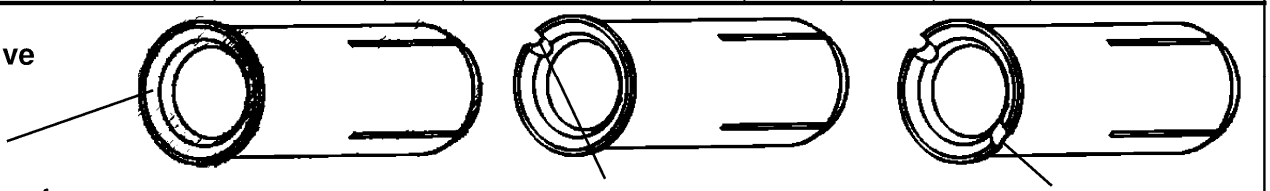

No groove for:

- EA II M6x30..
- EA II M8x30..
- EA II M10x40..
- EA II M12x50..

1 groove for:

- EA II M6x25..
- EA II M8x25..
- EA II M10x25..
- EA II M12x25..

2 grooves for:

- EA II M8x40..
- EA II M10x30..

Table A2.2: Marking on anchor body

galvanised steel (gvz)		stainless steel (R)	
with rim	*rimless*	*with rim*	*rimless*
EA II M6x25	EA II M6x25 RL	EA II M6x30 R	EA II M6x30 RL R
EA II M6x30	EA II M6x30 RL	EA II M8x30 R	EA II M8x30 RL R
EA II M8x25	EA II M8x25 RL	EA II M8x40 R	EA II M8x40 RL R
EA II M8x30	EA II M8x30 RL	EA II M10x30 R	EA II M10x30 RL R
EA II M8x40	EA II M8x40 RL	EA II M10x40 R	EA II M10x40 RL R
EA II M10x25	EA II M10x25 RL	EA II M12x50 R	EA II M12x50 RL R
EA II M10x30	EA II M10x30 RL	EA II M12x50 D R	EA II M12x50 RL D R
EA II M10x40	EA II M10x40 RL		
EA II M12x25	EA II M12x25 RL		
EA II M12x50	EA II M12x50 RL		
EA II M12x50 D	EA II M12x50 RL D		

(Fig. not to scale)

fischer drop-in anchor EA II

Product description
Anchor types

Annex A 2

Expansion sleeve

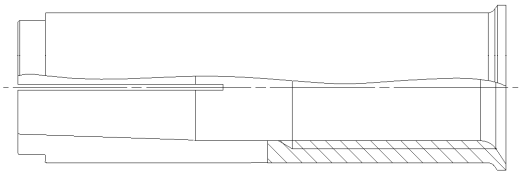

Expansion pin

Table A3.1: Materials

	Material	
Designation	galvanised steel (≥ 5 µm)	stainless steel (R)
Expansion sleeve	EN 10277:2018 or EN 10084:2008 or EN 10111:2008 or EN 10263:2018 or EN 10087:1999 or ASTM A29/A29M	EN 10088:2014
Expansion pin		
Fastening screw or threaded rod	steel, property class 4.6, 5.6, 5.8 or 8.8 according to EN ISO 898-1:2013	property class 50, 70 or 80 according EN ISO 3506:2020

Setting & drilling tools

Setting tools	Marking	Description	Marking on EA II with rim and rimless
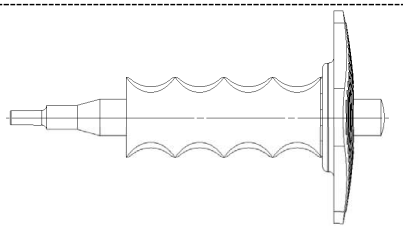	EHS Plus M..x h_{ef}	Manual setting tool with hand guard	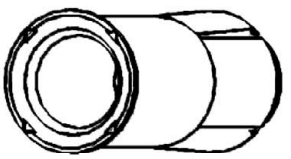
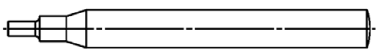	EHS M..x h_{ef}	Manual setting tool basic format	
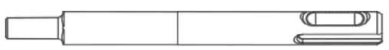	EMS M..x h_{ef}	Machine setting tool with SDS Plus	No marking

Drilling tools

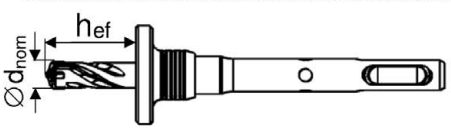	EBB $\varnothing d_{nom}$ x h_{ef}	Stop drill
Or other usual drillers		

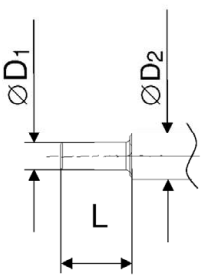

Table A4.1: Corresponding drill bits and parameters of setting tools

Manual setting tool	Machine setting tool	Stop drill	For anchor size	∅ D1 [mm]	∅ D2 [mm]	L [mm]
EHS (Plus) M6x25/30	EMS M6x25/30	EBB 8x25 EBB 8x30	EA II M6x25 EA II M6x30	4,8	9,0	17,0
EHS (Plus) M8x25/30	EMS M8x25/30	EBB 10x25 EBB 10x30	EA II M8x25 EA II M8x30	6,4	11,0	18,0
EHS (Plus) M8x40	EMS M8x40	EBB 10x40	EA II M8x40			28,0
EHS (Plus) M10x25/30	EMS M10x25/30	EBB 12x25 EBB 12x30	EA II M10x25 EA II M10x30	7,9	13,0	18,0
EHS (Plus) M10x40	EMS M10x40	EBB 12x40	EA II M10x40			24,0
EHS (Plus) M12x25	EMS M12x25	EBB 15x25	EA II M12x25	10,2	16,5	15,2
EHS (Plus) M12x50	EMS M12x50	EBB 15x50	EA II M12x50	10,2	16,5	30,0
EHS (Plus) M12x50	EMS M12x50	EBB 16x50	EA II M12x50 D			

(Fig. not to scale)

Specifications of intended use

Anchorages subject to:

fischer drop-in anchor EA II (all versions)		M6	M8	M10	M12
Hammer drilling with standard drill bit		All types			
Hammer drilling with hollow drill bit with automatic cleaning					
Material	Steel / Zinc plated	✓			
	Stainless steel / R				
Static and quasi-static loads					
Cracked and uncracked concrete					
Fire exposure in concrete C12/15 to C50/60					
Fire exposure in prestressed hollow concrete slabs		No performance assessed			

Base materials:

- Compacted reinforced and unreinforced normal weight concrete without fibres (cracked and uncracked) according to EN 206:2013+A1:2016
- Strength classes C12/15 to C50/60 according to EN 206:2013+A1:2016
- Precast prestressed hollow concrete slabs with w/e ≤ 4,2 and strength classes C30/37 to C50/60: M6x25, M8x25, M10x25 and M12x25

Use conditions (Environmental conditions):

- Structures subject to dry internal conditions: **EA II, EA II R**
- For all other conditions according to EN 1993-1-4:2006 + A1:2015 corresponding to corrosion resistance class CRC III **EA II R with h_{ef} ≥ 30 mm**

Design:

- Anchorages are designed under the responsibility of an engineer experienced in anchorages and concrete work
- Verifiable calculation notes and drawings are prepared taking account of the loads to be anchored. The position of the anchor is indicated on the design drawings (e. g. position of the anchor relative to reinforcement or to supports, etc.)
- Only for use for redundant non-structural system according to EN 1992-4:2018, Chapter 7.3. Design Method B according to EN 1992-4:2018.
- Anchorages under fire exposure are designed according to EN 1992-4:2018 Annex D

Installation:

- Anchor installation carried out by appropriately qualified personnel and under the supervision of the person responsible for technical matters of the site
- Create drill hole with hammer drill or with hollow drill and vacuum cleaner
- The anchor may only be used once
- In case of aborted hole: New hole must be drilled at a minimum distance of twice the depth of the aborted hole or closer, if the hole is filled with a high strength mortar (e.g. FIS EM Plus, FIS SB or FIS V Plus) and only if the hole is not in the direction of the oblique tensile or shear load
- Anchor expansion by impact using the setting tools given in Annex A 4. The anchor is properly set, if the stop of the setting tool reaches the expansion sleeve. The manual setting tool with installation control leaves a visible mark on the sleeve, as illustrated in Annex A 4 and B 4

Table B2.1: Installation parameters for concrete C12/15 to C50/60

Anchor size (all versions)			**M6**		**M8**			**M10**			**M12**		**M12D**
Nominal drill hole diameter	d_0	[mm]	8		10			12			15		16
Effective anchorage depth	h_{ef}	[mm]	25	30	25	30	40	25	30	40	25	50	50
Maximum installation torque	$T_{inst,max}$	[Nm]	4		8			15			35		
Minimum drill hole depth	h_1	[mm]	27	32	27	33	43	27	33	43	27	54	54
Minimum screw-in depth	$l_{s,min}$	[mm]	6		8			10			12		
Maximum screw-in depth	$l_{s,max}$	[mm]	14		14			14	15	17	14	22	
Clearance hole diameter	$\varnothing\ d_f \leq$	[mm]	7		9			12			14		
h_{min} = 80 mm													
Minimum spacing	s_{min}	[mm]	30	70	70	110	200	80	200		100	-	-
Minimum edge distance	c_{min}	[mm]	60	150	100	150		120	150		130	-	-
h_{min} = 100 mm													
Minimum spacing	s_{min}	[mm]	30	65	50	70		60	90	150	100	200	
Minimum edge distance	c_{min}	[mm]	60	115	100	115		100	160	180	110		
h_{min} = 120 mm													
Minimum spacing	s_{min}	[mm]	30	65	50	70		60	85	95	100	145	
Minimum edge distance	c_{min}	[mm]	60	115	100	115		100	140	150	110	200	

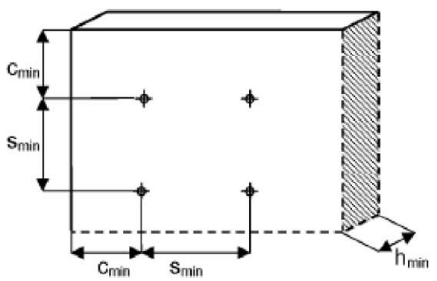

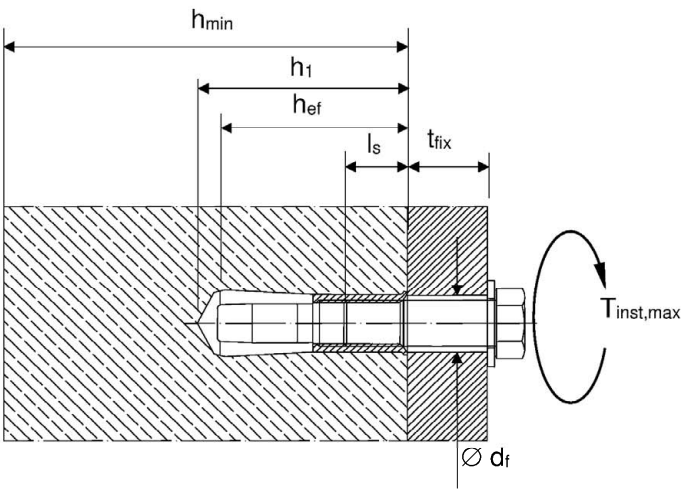

Fastening screw or threaded rod:

- Minimum property class and materials according to table A3.1
- The length of the fastening screw or threaded rod shall be determined depending on thickness of fixture t_{fix}, admissible tolerances and maximum screw-in depth $l_{s,max}$ as well as minimum screw-in depth $l_{s,min}$.

(Fig. not to scale)

Table B3.1: Installation parameters for precast pre-stressed hollow concrete slabs

Anchor size (all versions)			M6	M8	M10	M12
Nominal drill hole diameter	d_0	[mm]	8	10	12	15
Effective anchorage depth	h_{ef}	[mm]	25			
Maximum installation torque	$T_{inst,max}$	[Nm]	4	8	15	35
Minimum drill hole depth	h_1	[mm]	27			
Minimum screw-in depth	$l_{s,min}$	[mm]	6	8	10	12
Maximum screw-in depth	$l_{s,max}$	[mm]	14			
Clearance hole diameter	$\varnothing\ d_f$	[mm]	7	9	12	14
Minimum spacing	$s_{min} = s_{cr}$	[mm]	200			
Minimum edge distance	$c_{min} = c_{cr}$	[mm]	150			

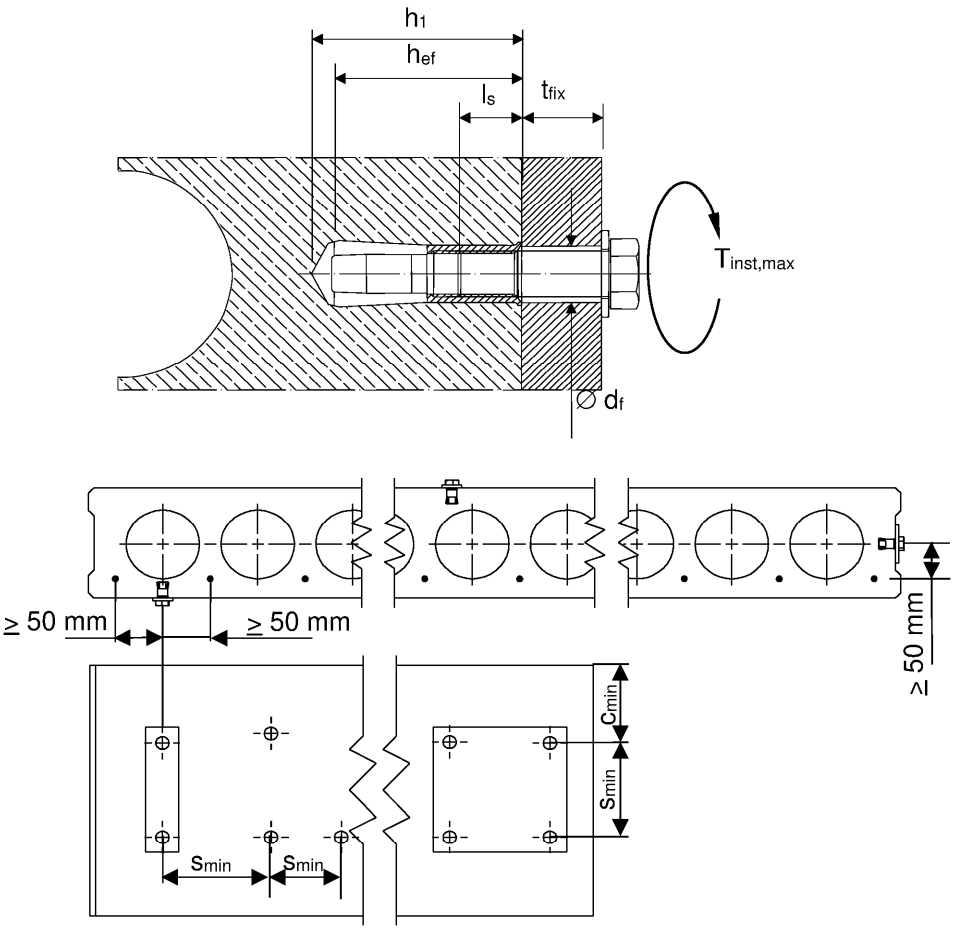

Fastening screw or threaded rod:

- Minimum property class and materials according to table A3.1
- The length of the fastening screw or threaded rod shall be determined depending on thickness of fixture t_{fix}, admissible tolerances and maximum screw-in depth $l_{s,max}$ as well as minimum screw-in depth $l_{s,min}$.

(Fig. not to scale)

Installation instructions

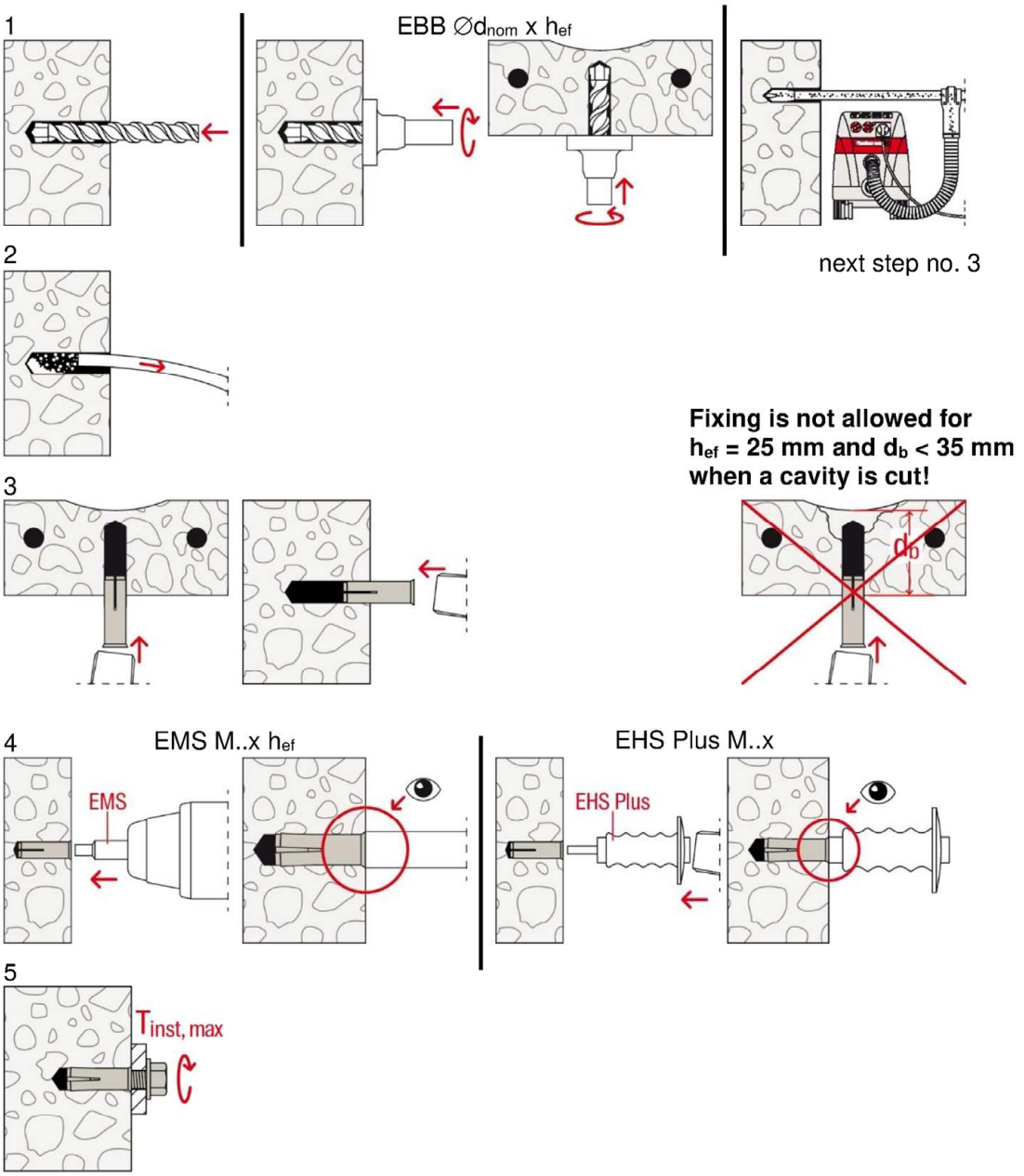

No.	Description
1	Create drill hole with hammer drill or stop drill or with hollow drill and vacuum cleaner
2	Clean from drill-dust
3	Set anchor till anchor is flush with surface of concrete
4	Expand the sleeve by driving the pin with the corresponding setting tool into the sleeve and control the correct setting
5	Fixation of fixture. Maximum installation torque $T_{inst,max}$ must not be exceeded

(Fig. not to scale)

Table C1.1: Characteristic resistance of a fixing point[1] for all load directions

Anchor size		property class of the fastening screw or threaded rod	M6		M8			M10			M12/ M12D	
Effective anchorage depth	h_{ef} [mm]		25	30	25	30	40	25	30	40	25	50
All load directions												
Characteristic resistance C12/15	F^0_{RK} [kN]	≥ A4-50	-[2]	2	-[2]	3		-[2]	3	5	-[2]	6
		≥ steel 4.6	1,5		2			3			3	
Characteristic resistance C20/25 to C50/60	F^0_{RK} [kN]	≥ A4-50	-[2]	3	-[2]	5		-[2]	5	7,5	-[2]	9
		≥ steel 4.6	2		3			4			4	
Installation factor	γ_{inst} [-]		1,0	1,2	1,0	1,2		1,0	1,2		1,0	
Characteristic spacing	s_{cr} [mm]		75	90	75	90	120	75	90	200	75	300
Characteristic edge distance	c_{cr} [mm]		38	45	38	45	60	38	45	100	38	150
Steel failure with lever arm												
Characteristic resistance	$M^0_{Rk,s}$ [Nm]	A4-50	-[2]	8	-[2]	19		-[2]	37		-[2]	66
Partial factor	γ_{Ms}[3] [-]		2,38									
Characteristic resistance	$M^0_{Rk,s}$ [Nm]	A4-70	-[2]	11	-[2]	26		-[2]	52		-[2]	92
Partial factor	γ_{Ms}[3] [-]		1,56									
Characteristic resistance	$M^0_{Rk,s}$ [Nm]	A4-80	-[2]	12	-[2]	30		-[2]	60		-[2]	105
Partial factor	γ_{Ms}[3] [-]		1,33									
Characteristic resistance	$M^0_{Rk,s}$ [Nm]	steel 4.6	6,1		15			30			52	
Partial factor	γ_{Ms}[3] [-]		1,67									
Characteristic resistance	$M^0_{Rk,s}$ [Nm]	steel 5.6	7,6		19			37			66	
Partial factor	γ_{Ms}[3] [-]		1,67									
Characteristic resistance	$M^0_{Rk,s}$ [Nm]	steel 5.8	7,6		19			37			66	
Partial factor	γ_{Ms}[3] [-]		1,25									
Characteristic resistance	$M^0_{Rk,s}$ [Nm]	steel 8.8	12		30			60			105	
Partial factor	γ_{Ms}[3] [-]		1,25									

[1] For definition see EN 1992-4:2018, Picture 3.4
[2] No performance assessed
[3] In absence of other national regulations

Table C2.1: Characteristic values for h_{ef} = 25 mm in precast pre-stressed hollow concrete slabs according to design method C with C30/37 to C50/60

Anchor size		property class of the fastening screw or threaded rod	**M6**	**M8**	**M10**	**M12**
Effective anchorage depth	h_{ef} [mm]		25			
All Load directions			galvanised steel; with rim			
Flange thickness	d_b [mm]		≥ 35 (or 30[1])			
Characteristic resistance C30/37 to C50/60	F^0_{RK} [kN]		2	3	4	
Installation factor	γ_{inst} [-]		1,0			
Characteristic spacing	$s_{cr} = s_{min}$ [mm]		200			
Characteristic edge distance	$c_{cr} = c_{min}$ [mm]		150			
Steel failure with lever arm						
Characteristic resistance	$M^0_{Rk,s}$ [Nm]	steel 4.6	6,1	15	30	52
Partial factor	γ_{Ms}[2] [-]		1,67			
Characteristic resistance	$M^0_{Rk,s}$ [Nm]	steel 5.6	7,6	19	37	66
Partial factor	γ_{Ms}[2] [-]		1,67			
Characteristic resistance	$M^0_{Rk,s}$ [Nm]	steel 5.8	7,6	19	37	66
Partial factor	γ_{Ms}[2] [-]		1,25			
Characteristic resistance	$M^0_{Rk,s}$ [Nm]	steel 8.8	12	30	60	105
Partial factor	γ_{Ms}[2] [-]		1,25			

[1] The anchor may be used in a flange thickness d_b of minimum 30 mm with the same characteristic resistance, but the drill hole is not allowed to cut a cavity (see Annex B 4 Point 3). The use of the fischer stop drill EBB is recommended

[2] In absence of other national regulations

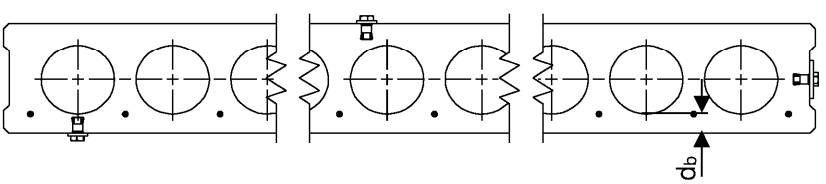

(Fig. not to scale)

fischer drop-in anchor EA II

Performances
Characteristic values for tension loads in hollow core slabs according to design method C with C30/37 to C50/60

Annex C 2

Table C3.1: Characteristic resistance under fire exposure[3] in concrete C20/25 to C50/60

fire resistance class	EA II		property class of the fastening screw or threaded rod	M6x25	M6x30	M8x25	M8x30	M8x40	M10x25	M10x30	M10x40	M12x25	M12x50/ M12x50D
All load directions													
R 30	Characteristic resistance C20/25 to C50/60	$F_{Rk,fi}$[1] [kN]	steel ≥ 4.6 or ≥ A4-50[2]	0,5	0,6		0,9	1,3	0,6	0,9	1,8	0,6	2,3
R 60				0,5		0,6	0,9				1,5		
R 90				0,4	0,6					0,9			2,0
R 120				0,3	0,5					0,6		0,5	1,3
R 30 – R 120	Characteristic spacing	$s_{cr,fi}$ [mm]		100	120	100	120	160	100	120	160	100	200
	Characteristic edge distance	$c_{cr,fi}$ [mm]		50	115	50	140	140	50	140	160	50	

[1] In absence of other national regulations, a partial factor for the resistance of $\gamma_{m,fi}$ = 1,0 under fire impact is recommended.
[2] Not for M..x25
[3] Not valid for precast pre-stressed hollow core slabs

Table C3.2: Characteristic resistance under fire exposure[3] for shear load with level arm in concrete C20/25 to C50/60

fire resistance class	EA II		property class of the fastening screw or threaded rod	M6x25	M6x30	M8x25	M8x30	M8x40	M10x25	M10x30	M10x40	M12x25	M12x50/ M12x50D
R 30	Characteristic resistance	$M^0_{RK,s,fi}$[1] [Nm]	steel ≥ 4.6 or ≥ A4-5[2]	0,65	0,5	1,30	1,7	1,7	2,4	4,4	4,4	7,1	9,5
R 60				0,50	0,4	0,95	1,3	1,3	1,7	3,2	3,2	5,0	6,7
R 90				0,35	0,3	0,60	0,8	0,8	1,0	1,9	1,9	2,9	3,9
R 120				0,30	0,2	0,45	0,6	0,6	0,7	1,3	1,3	1,8	2,4

[1] In absence of other national regulations, a partial factor for the resistance of $\gamma_{m,fi}$ = 1,0 under fire impact is recommended.
[2] Not for M..x25
[3] Not valid for precast pre-stressed hollow core slabs

In case of fire attack from more than one side, the edge distance shall be $c_{fi,min}$ ≥ 300 mm