# IZJAVA O LASTNOSTIH

## DoP 0248

za fischer termoz PN 8 (Zidni vložki iz umetnih mas za uporabo v betonu in opečnatih zidovih) SL

| | | |
|---|---|---|
| 1. Enotna identifikacijska oznaka tipa proizvoda: | **DoP 0248** | |
| 2. Predvidena uporaba: | **Pribito plastično sidro za pritrditev (v) zunanjih toplotnoizolacijskih kompozitnih sistemih (ETICS) z ometom v betonu in zidu, Glej dodatek, zlasti priloge B1- B3.** | |
| 3. Proizvajalec: | **fischerwerke GmbH & Co. KG, Weinhalde 14-18, 72178 Waldachtal, Nemčija** | |
| 4. Pooblaščeni zastopnik: | **–** | |
| 5. Sistemi ocenjevanja in preverjanja nespremenljivosti lastnosti: | **2+** | |
| 6. Evropski ocenjevalni dokument: | **ETAG 014, February 2011, uporaba za EAD** | |
| Evropska tehnična ocena: | **ETA-09/0171; 2016-03-18** | |
| Organ za tehnično ocenjevanje: | **DIBt- Deutsches Institut für Bautechnik** | |
| Priglašeni organi: | **2873 TU Darmstadt** | |
| 7. Navedene lastnosti: | | |
| **Varnost pri uporabi (BWR 4)** | | |
| **Značilna nosilnost:** | **Karakteristična odpornost pri napetostni obremenitvi:** | **Priloge C1** |
| | **Najmanjša razdalja od roba:** | **Priloge B2** |
| | **Najmanjši razmik:** | **Priloge B2** |
| **Premiki:** | **Natezna obremenitev z delnim faktorjem:** | **Priloge C2** |
| | **Premiki:** | **Priloge C2** |
| **Togost plošče:** | **Premer sidrne plošče:** | **Priloge C2** |
| | **Odpornost na obremenitev sidrne plošče:** | **Priloge C2** |
| | **Togost plošče:** | **Priloge C2** |
| **Varčevanje energije in zadrževanje toplote (BWR 6)** | | |
| **Toplotna prevodnost:** | **Točkovna toplotna prehodnost sidra:** | **Priloge C2** |
| | **Debelina izolacijskega sloja ETICS:** | **Priloge C2** |
| 8. Ustrezna tehnična dokumentacija in/ali specifična tehnična dokumentacija: | **–** | |

Lastnosti proizvoda, navedenega zgoraj, so v skladu z navedenimi lastnostmi. Za izdajo te izjave o lastnostih je v skladu z Uredbo (EU) št. 305/2011 odgovoren izključno proizvajalec, naveden zgoraj.

Podpisal za in v imenu proizvajalca:

Dr. Oliver Geibig, Generalni direktor poslovne enote in inženiringa

Jürgen Grün, Generalni director za kemijo in kvaliteto

Tumlingen, 2021-01-08

Ta izjava o lastnostih je bila pripravljena v različnih jezikih. V primeru nerazumevanja, se vedno upošteva angleška različica.

Priloga vsebuje informacije v angleškem jeziku, ki presegajo zakonske zahteve.

**Specific Part**

## 1 Technical description of the product

The fischer nailed-in anchor termoz PN 8 consists of a plastic sleeve made of polypropylene, a plate and an accompanying specific nail made of glass fibre reinforced polyamide.

The anchor may in addition be combined with the anchor plates DT 90, DT 110 and DT 140.

The Product description is given in Annex A.

## 2 Specification of the intended use in accordance with the applicable European Assessment Document

The performances given in Section 3 are only valid if the anchor is used in compliance with the specifications and conditions given in Annex B.

The verification and assessment methods on which this European Technical Assessment is based lead to the assumption of a working life of the anchor of at least 25 years. The indications given on the working life cannot be interpreted as a guarantee given by the producer, but are to be regarded only as a means for choosing the right products in relation to the expected economically reasonable working life of the works.

## 3 Performance of the product and references to the methods used for its assessment

### 3.1 Mechanical resistance and stability (BWR 1)

The essential characteristics regarding mechanical resistance and stability are included under the Basic Works Requirement Safety in use.

### 3.2 Hygiene, health and the environment (BWR 3)

Regarding dangerous substances there may be requirements (e.g. transposed European legislation and national laws, regulations and administrative provisions) applicable to the products falling within the scope of this European Technical Assessment. In order to meet the provisions of Regulation (EU) No 305/2011, these requirements need also to be complied with, when and where they apply.

### 3.3 Safety in use (BWR 4)

| Essential characteristic | Performance |
|---|---|
| Characteristic tension resistance | See Annex C 1 |
| Edge distances and spacing | See Annex B 2 |
| Point thermal transmittance | See Annex C 2 |
| Plate stiffness | See Annex C 2 |
| Displacements | See Annex C 2 |

## 4 Assessment and verification of constancy of performance (AVCP) system applied, with reference to its legal base

In accordance with guideline for European technical approval ETAG 014, February 2011 used as European Assessment Document (EAD) according to Article 66 Paragraph 3 of Regulation (EU) No 305/2011 the applicable European legal act is: 97/463/EC.

The system to be applied is: 2+

## termoz PN 8

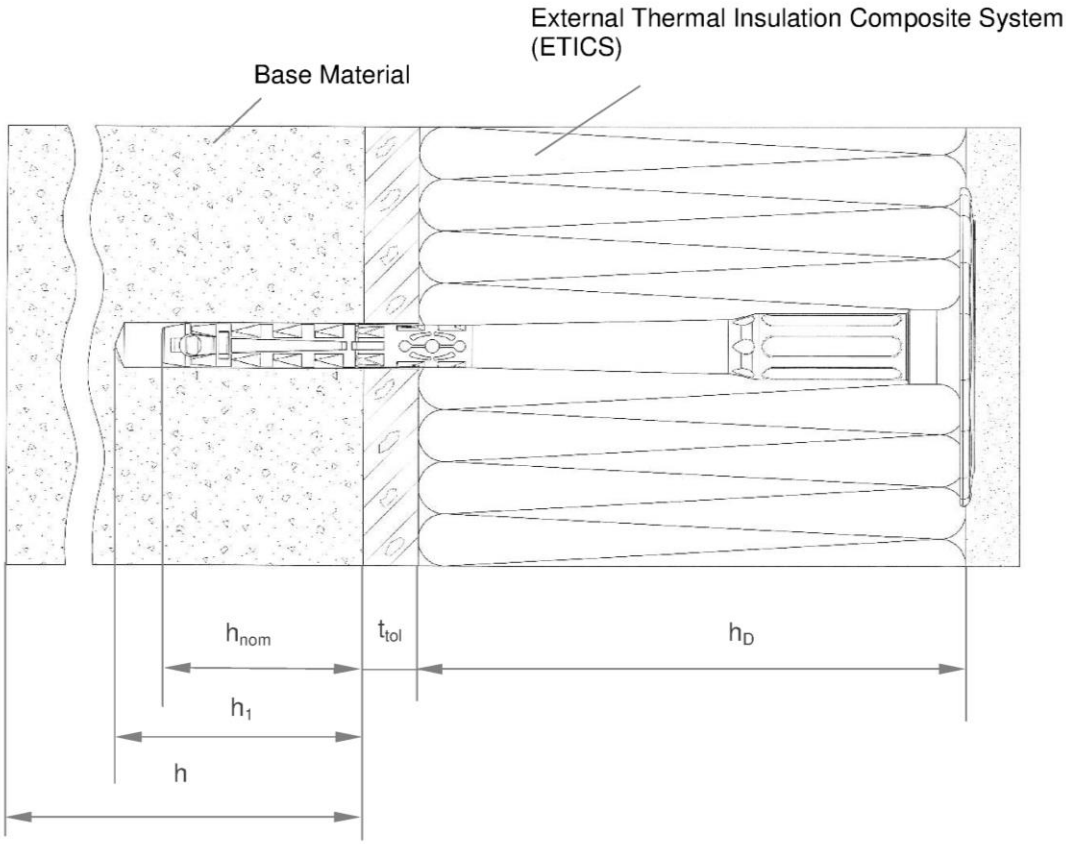


**Legend**

| | | |
|---|---|---|
| $h_{nom}$ | = | Overall plastic anchor embedment depth in the base material |
| $h_1$ | = | Depth of drilled hole to deepest point |
| h | = | Thickness of member (wall) |
| $h_D$ | = | Thickness of insulation material |
| $t_{tol}$ | = | Thickness of equalizing layer or non–load bearing coating |

## termoz PN 8

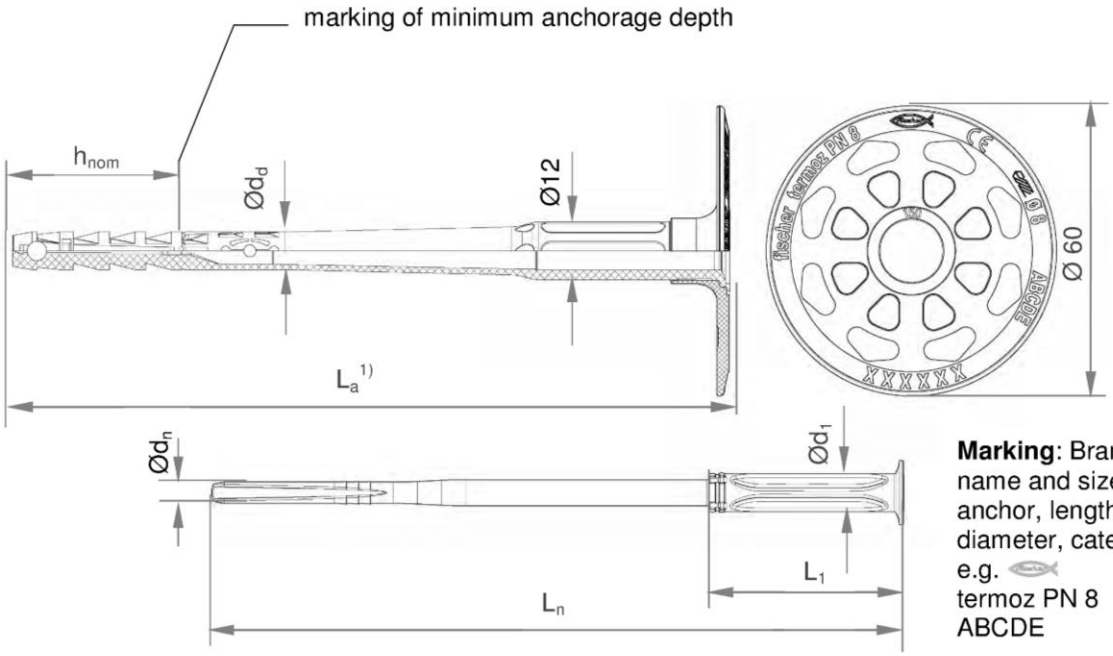


**Marking**: Brand, name and size of anchor, length, diameter, categories e.g. termoz PN 8 ABCDE

1) Various length of the anchors are possible

### Table A2.1: Dimensions

| Anchor type | Anchor sleeve | | Accompanying specific plastic nail | | |
|---|---|---|---|---|---|
| | **Ø $d_d$** [mm] | **$h_{nom}$** [mm] | **Ø $d_n$** [mm] | **$L_1$** [mm] | **Ø $d_1$** [mm] |
| termoz PN 8 | 8 | 35/55 1) | 4,4 | 40 | 8 |

1) Only for use Cat. D and E

Determination of maximum thickness of insulation: $h_D = L_a - h_{nom} - t_{tol}$

e.g. for termoz PN 8x150:

$L_a$ = 148 mm, $h_{nom}$ = 35 mm, $t_{tol}$ = 10 $h_D$ = 148 - 35 - 10 ≈ 100 mm

termoz PN 8 : $L_{a\,min} \geq 110$ mm; $L_{a\,max} \leq 230$ mm

$L_a$ = length of accompanying specific nail $L_n$ + 5 mm

## Table A3.1: Material

| Designation | Material |
|---|---|
| Anchor sleeve | PP, colour: grey |
| Specific plastic nail | PA 6 GF, colour: nature |
| Slip-on plate | PA6, GF<br>colour: grey, orange, red, green, yellow, blue |

### Drawing of the slip-on plates

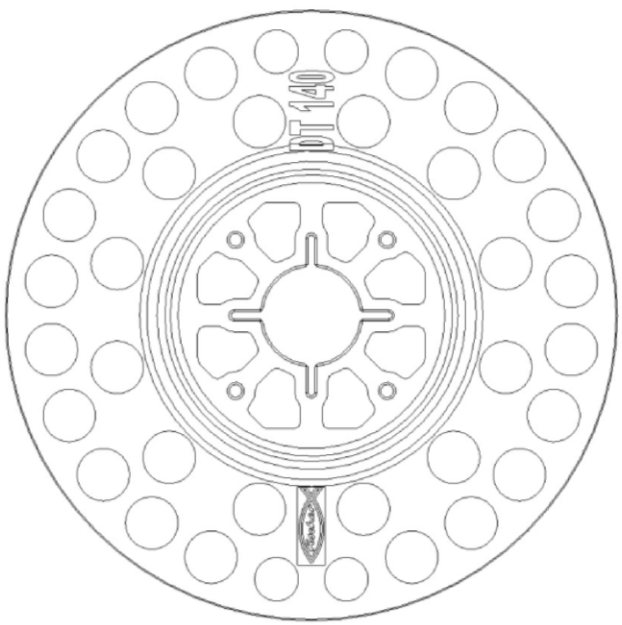


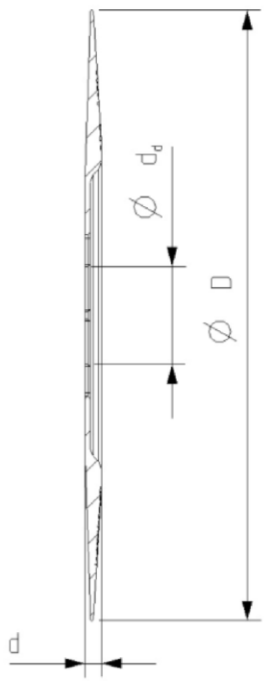


## Table A3.2 Slip-on plates, diameters and material

| Slip-on plate | Ø D [mm] | Ø $d_d$ [mm] | d [mm] | Material |
|---|---|---|---|---|
| DT 90 / 110 / 140 | 90 / 110 / 140 | 22,5 | 3,9 | PA 6 GF |

## Specifications of intended use

**Anchorages subject to:**

- The anchor may only be used for transmission of wind suction loads and shall not be used for the transmission of dead loads of the external thermal insulation composite system (ETICS).

**Base materials:**

- Normal weight concrete (use category A) according to Annex C1.
- Solid masonry (use category B), according to Annex C1.
- Hollow or perforated masonry (use category C), according to Annex C1.
- Lightweight aggregate concrete (use category D), according to Annex C1.
- Autoclaved aerated concrete (use category E), according to Annex C1.
- For other base materials of the use categories A, B, C, D and E the characteristic resistance of the anchor may be determined by job site tests according to ETAG 014 Edition February 2011, Annex D.

**Temperature Range:**

- 0°C to +40°C (max. short term temperature +40°C and max. long term temperature +24°C).

**Design:**

- The anchorages are designed in accordance with ETAG 014 Edition February 2011 under the responsibility of an engineer experienced in anchorages and masonry work.
- Verifiable calculation notes and drawings are prepared taking account of the loads to be anchored. The position of the anchors is indicated on the design drawings.
- Fasteners are only to be used for multiple fixings of ETICS.

**Installation:**

- Drilling method according to Annex C1.
- Anchor installation carried out by appropriately qualified personnel and under the supervision of the person responsible for technical matters on the site.
- Installation temperature from 0°C to +40°C
- Exposure to UV due to solar radiation of the anchor not protected by rendering ≤ 6 weeks.

## Table B2.1: Installation parameters

| Anchor type | | | | termoz PN 8 |
|---|---|---|---|---|
| Drill hole diameter | $d_0$ | = | [mm] | 8 |
| Cutting diameter of drill bit | $d_{cut}$ | ≤ | [mm] | 8,45 |
| Depth of drilled hole to deepest point | $h_1$ | ≥ | [mm] | 45/65[1)] |
| Overall plastic anchor embedment depth in the base material | $h_{nom}$ | ≥ | [mm] | 35/55[1)] |

[1)] Only for use categorie “D” and “E”

## Table B2.2: Minimum distances and spacings

| | | | | termoz PN 8 |
|---|---|---|---|---|
| Minimum thickness of member | h | ≥ | [mm] | 100 |
| Minimum spacing | $s_{min}$ | = | [mm] | 100 |
| Minimum edge distance | $c_{min}$ | = | [mm] | 100 |

### Scheme of distance and spacing

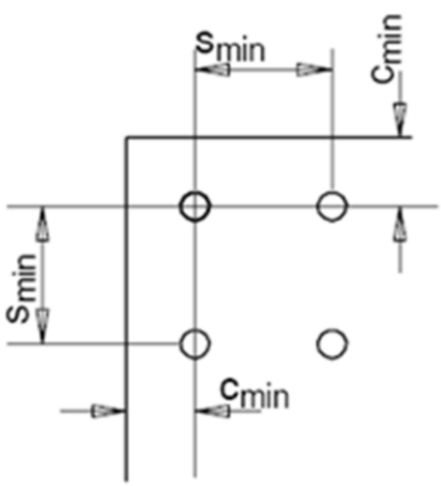

## Installation instructions

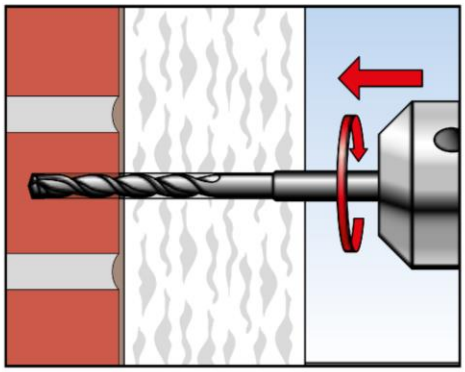

1. Drill hole by corresponding drilling method.

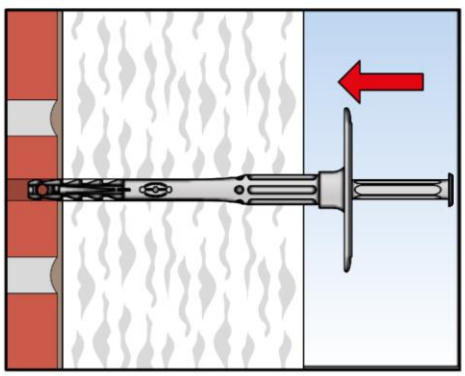

2. Insert anchor manually.

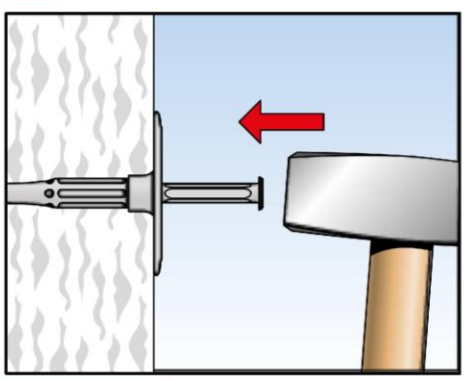

3. Set anchor by hammer-blows.

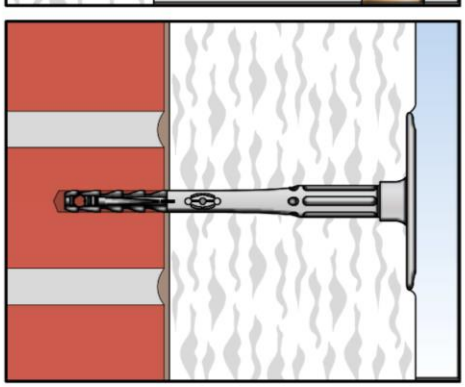

4. Correctly installed anchor.

## Table C1.1: Characteristic resistance $N_{Rk}$ in [kN] to tension loads for single anchor

| Base material | Use cat.[1] | Bulk density class ρ [kg/dm³] | Min. compressive strength $f_b$ [N/mm²] | Remarks | Drill method[2] | Characteristic resistance $N_{Rk}$ to tension loads [kN] **termoz PN 8** |
|---|---|---|---|---|---|---|
| Concrete ≥ C12/15 - C50/60 EN 206:2013 | A | - | - | - | H | **0,5** |
| Solid Clay bricks e.g. acc. to DIN 105-100:2012-01, EN 771-1:2011, Mz | B | ≥ 2,0 | 12 | Cross section reduced up to 15% by perforation vertically to the resting area | H | **0,6** |
| Calcium silicate solid bricks, e.g. acc. to DIN V 106:2005-10, EN 771-2:2011, KS | B | ≥ 1,8 | 12 | Cross section reduced up to 15% by perforation vertically to the resting area | H | **0,6** |
| Vertically perforated clay bricks e.g. acc. to DIN 105-100:2012-01, EN 771-1:2011, HLz | C | ≥ 1,0 | 12 | Cross section reduced between 15% and 50% by perforation vertically to the resting area. Exterior web thickness ≥ 12 mm | R | **0,4** |
| Hollow calcium silicate brick, e.g. acc. to DIN V 106:2005-10, EN 771-2:2011, KSL | C | ≥ 1,4 | 12 | Cross section reduced between 15% and 50% by perforation vertically to the resting area. Exterior web thickness ≥ 23 mm | H | **0,4** |
| Lightweight concrete hollow blocks e.g. acc. to DIN V 18151-100: 2005-10, EN 771-3:2011, Hbl | C | ≥ 1,2 | 10 | - | H | **0,5** |
| Lightweight aggregate concrete, LAC e.g. acc. to EN 1520:2011 | D | ≥ 0,9 | 4 | Minimum solid brick or minimum exterior web thickness t = 50 mm | H | **0,3** |
| | | | 6 | | | **0,4** |
| Autoclaved aerated concrete blocks, AAC e.g. acc. to DIN V 4165-100:2005-10, EN 771-4:2011 | E | ≥ 0,5 | 4 | - | R | **0,3** |
| | | ≥ 0,6 | 6 | | | **0,4** |
| Partial safety factor for anchor resistance[3] | | | | | $\gamma_M$ | **2,0** |

1) See Annex B 1
2) R = Rotary drilling | H = Hammer drilling
3) In absence of other national regulations

**Table C2.1 Point thermal transmittance acc. to EOTA Technical Report TR 025:2007-06**

| Anchor type | Thickness of insulation material $h_D$ [mm] | Point thermal transmittance $\chi$ [W/K] |
|---|---|---|
| termoz PN 8 | 60 - 180 | 0,000 |

**Table C2.2: Plate stiffness acc. to EOTA Technical Report TR 026:2007-06**

| Anchor type | Max. size of the anchor plate [mm] | Load resistance of the anchor plate [kN] | Plate stiffness [kN/mm] |
|---|---|---|---|
| termoz PN 8 | 60 | 1,7 | 0,6 |

**Table C2.3 Displacements**

| Base material | | Tension load $F_{Rd}$ [kN] | Displacements $\delta_m$ [mm] |
|---|---|---|---|
| Concrete ≥ C12/15 – C50/60 acc. to EN 206:2013 | | 0,15 | 0,2 |
| Clay brick e.g.acc. to DIN 105-100:2012-01, EN 771-1:2011, Mz 12 | | 0,20 | 0,2 |
| Calcium silicate solid bricks e.g. acc. to DIN V 106:2005-10 EN 771-2 :2011,KS 12 | | 0,20 | 0,3 |
| Vertically perforated clay brick e.g. acc. to DIN 105-100:2012-01 EN 771-1:2011,Hlz 12 | | 0,15 | 0,4 |
| Hollow calcium silicate brick e.g. acc. to DIN V 106:2005-10 EN 771-2:2011, KSL 12 | | 0,15 | 0,2 |
| Hollow brick lightweight concrete e.g. acc. to DIN V 18153-100: 2005-10, EN 771-3:2011, Hbl 4 | | 0,15 | 0,2 |
| Lightweight aggregate concrete e.g. acc. to EN 1520:2011 | LAC 4 | 0,10 | 0,2 |
| | LAC 6 | 0,13 | |
| Autoclaved aerated concrete blocks e.g. acc. to DIN V 4165-100:2005-10 EN 771-4 | AAC 4 | 0,10 | 0,1 |
| | AAC 6 | 0,13 | 0,2 |