IZJAVA O LASTNOSTIH

DoP 0317

za fischer sistem za vbrizgavanje FIS AB (pritrjen pritrdilni element za uporabo v betonu) SL

1. Enotna identifikacijska oznaka tipa proizvoda: **DoP 0317**

2. Predvidena uporaba: **Za vgradnjo v razpokan in nerazpokan beton, glej dodatek, zlasti priloge B1 - B9.**

3. Proizvajalec: **fischerwerke GmbH & Co. KG, Otto-Hahn-Straße 15, 79211 Denzlingen, Nemčija**

4. Pooblaščeni zastopnik: **–**

5. Sistemi ocenjevanja in preverjanja nespremenljivosti lastnosti: **1**

6. Evropski ocenjevalni dokument: **EAD 330499-01-0601, Edition 04/2020**
   Evropska tehnična ocena: **ETA-17/0350; 2022-07-29**
   Organ za tehnično ocenjevanje: **DIBt- Deutsches Institut für Bautechnik**
   Priglašeni organi: **2873 TU Darmstadt**

7. Navedene lastnosti:
   Mehanska odpornost in stabilnost (BWR 1)
   Karakteristična odpornost na napetostno obremenitev (statična in kvazistatična obremenitev):
   Odpornost pri odpovedi jekla: Prilogah C1 - C3
   Odpor na kombinirani izvlek in odpoved betonskega stožca: Prilogah C4 - C6
   Odpornost na odpoved v betonski coni: Priloge C4
   Razdalja od roba betona za preprečevanje loma pod obremenitvijo: Priloge C4
   Robusnost: Prilogah C4 - C6
   Največji zatezni navor: Prilogah B3, B4
   Najmanjša razdalja do roba betona in razmik: Prilogah B3 - B5

   Karakteristična odpornost proti strižni obremenitvi (statična in kvazistatična obremenitev):
   Odpornost na odpoved jekla: Prilogah C1 - C3
   Odpornost na neuspešno odstranitev: Priloge C4
   Odpornost na odpoved od roba betona: Priloge C4

   Zamenjave pri kratkoročnem in dolgoročnem nalaganju:
   Zamenjave pri kratkoročnem in dolgoročnem nalaganju: Prilogah C7, C8

   Karakteristična odpornost in premiki za kategoriji seizmičnih lastnosti C1 in C2:
   Odpornost na napetost, premiki, kategorija C1: NPD
   Odpornost na napetost, premiki, kategorija C2: NPD
   Odpornost na strižno obremenitev, premiki, kategorija C1: NPD
   Odpornost na strižno obremenitev, premiki, kategorija C2: NPD
   Faktor reže obroča: NPD

   Higiena, zdravje in okolje (BWR 3)
   Vsebina, emisije in / ali sproščanje nevarnih snovi: NPD

8. Ustrezna tehnična dokumentacija in/ali specifična tehnična dokumentacija: **–**

Lastnosti proizvoda, navedenega zgoraj, so v skladu z navedenimi lastnostmi. Za izdajo te izjave o lastnostih je v skladu z Uredbo (EU) št. 305/2011 odgovoren izključno proizvajalec, naveden zgoraj.

Podpisal za in v imenu proizvajalca:

Dr.-Ing. Oliver Geibig, Generalni direktor poslovne enote in inženiringa

Jürgen Grün, Generalni director za kemijo in kvaliteto

Tumlingen, 2022-10-24

Ta izjava o lastnostih je bila pripravljena v različnih jezikih. V primeru nerazumevanja, se vedno upošteva angleška različica.

Priloga vsebuje informacije v angleškem jeziku, ki presegajo zakonske zahteve.

Specific Part

1 Technical description of the product

The "fischer injection system FIS AB" is a bonded fastener consisting of a cartridge with injection mortar fischer FIS AB, fischer FIS AB High Speed or fischer FIS AB Low Speed and a steel element according to Annex A4.

The steel element is placed into a drilled hole filled with injection mortar and is anchored via the bond between metal part, injection mortar and concrete.

The product description is given in Annex A.

2 Specification of the intended use in accordance with the applicable European Assessment Document

The performances given in Section 3 are only valid if the fastener is used in compliance with the specifications and conditions given in Annex B.

The verifications and assessment methods on which this European Technical Assessment is based lead to the assumption of a working life of the fastener of at least 50 years. The indications given on the working life cannot be interpreted as a guarantee given by the producer, but are to be regarded only as a means for choosing the right products in relation to the expected economically reasonable working life of the works.

3 Performance of the product and references to the methods used for its assessment

3.1 Mechanical resistance and stability (BWR 1)

Essential characteristic	Performance
Characteristic resistance to tension load (static and quasi-static loading)	See Annex B 3 to B 5, C 1 to C 6
Characteristic resistance to shear load (static and quasi-static loading)	See Annex C 1 to C 4
Displacements under short-term and long-term loading	See Annex C 7 and C 8
Characteristic resistance and displacements for seismic performance categories C1 and C2	No performance assessed

3.2 Hygiene, health and the environment (BWR 3)

Essential characteristic	Performance
Content, emission and/or release of dangerous substances	No performance assessed

4 Assessment and verification of constancy of performance (AVCP) system applied, with reference to its legal base

In accordance with the European Assessment Document EAD 330499-01-0601 the applicable European legal act is: [96/582/EC].

The system to be applied is: 1

Installation conditions part 1

fischer anchor rod

Pre-positioned installation

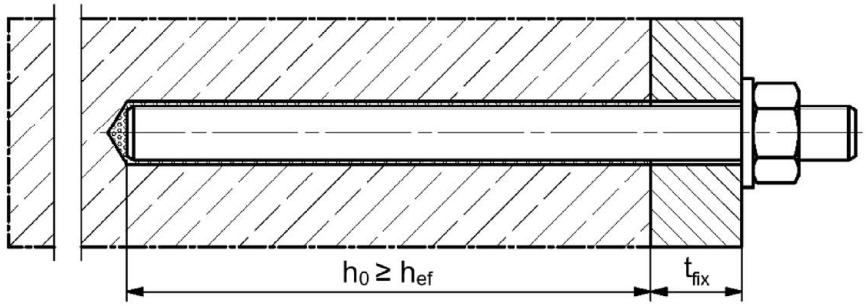

Push through installation (annular gap filled with mortar)

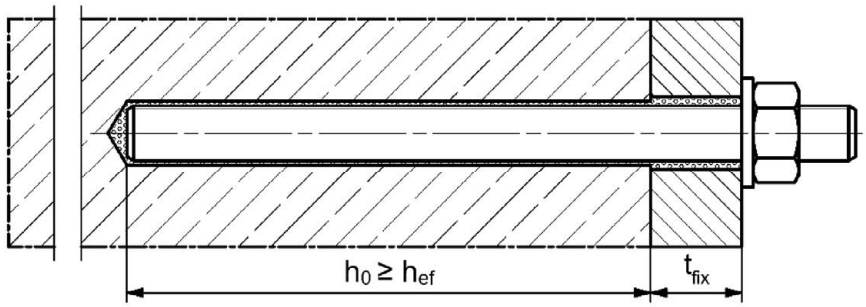

Pre-positioned or push through installation with subsequently injected fischer filling disc
(annular gap filled with mortar)

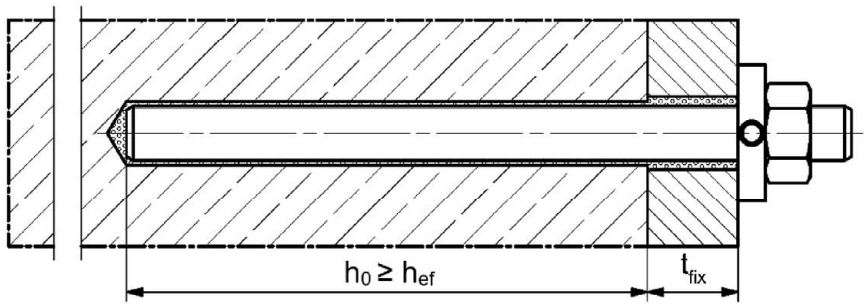

Figures not to scale

h_0 = drill hole depth

h_{ef} = effective embedment depth

t_{fix} = thickness of fixture

fischer injection system FIS AB

Product description
Installation conditions part 1

Annex A 1

Installation conditions part 2

fischer internal threaded anchor RG M I

Pre-positioned installation

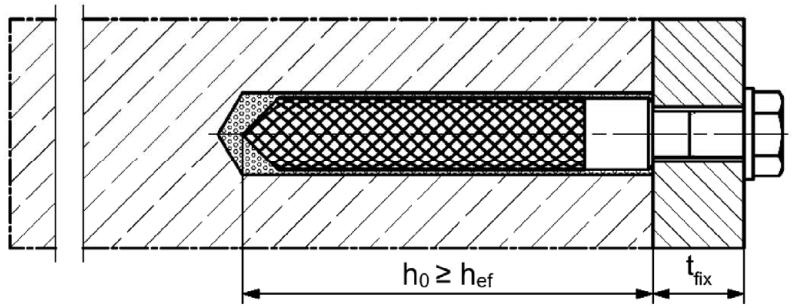

Pre-positioned installation with subsequently injected fischer filling disc (annular gap filled with mortar)

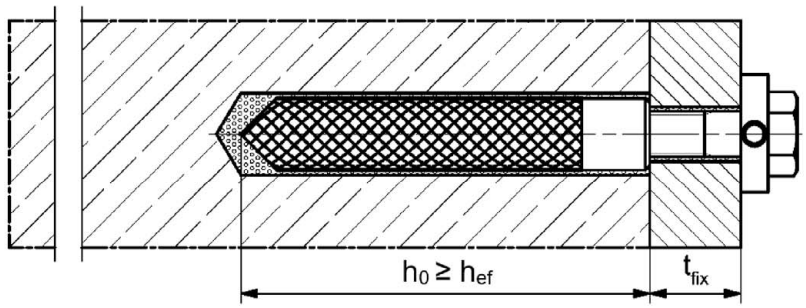

Reinforcing bar

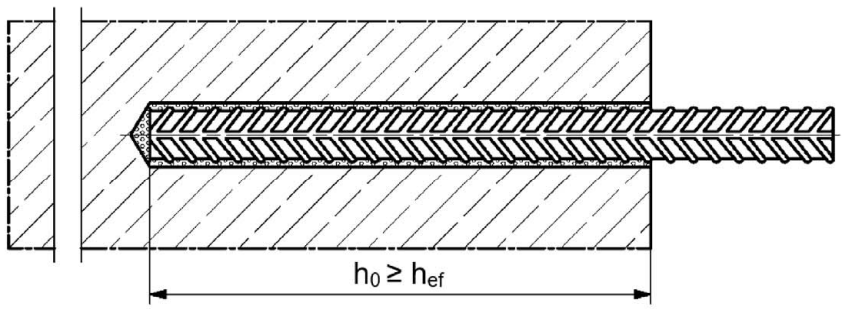

Figures not to scale

h_0 = drill hole depth

h_{ef} = effective embedment depth

t_{fix} = thickness of fixture

fischer injection system FIS AB

Product description
Installation conditions part 2

Annex A 2

Overview system components part 1

Injection cartridge (shuttle cartridge) with sealing cap; Sizes: 360 ml, 825 ml

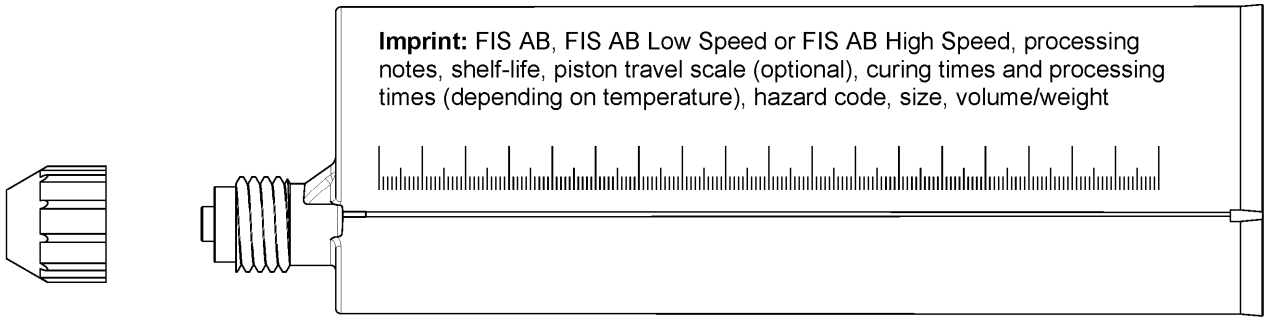

Injection cartridge (coaxial cartridge) with sealing cap; Sizes: 100 ml, 150 ml, 300 ml, 380 ml, 400 ml, 410 ml

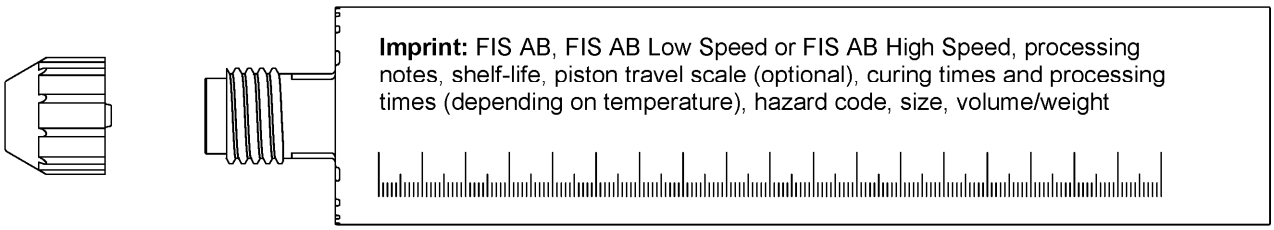

Static mixer FIS MR Plus for injection cartridges up to 410 ml

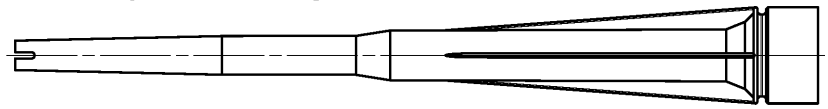

Static mixer FIS JMR for injection cartridges with 825 ml

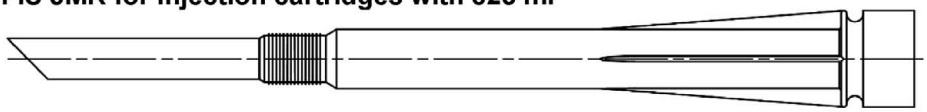

Injection adapter and extension tube Ø 9 for static mixer FIS MR Plus;
Injection adapter and extension tube Ø 9 or Ø 15 for static mixer FIS JMR

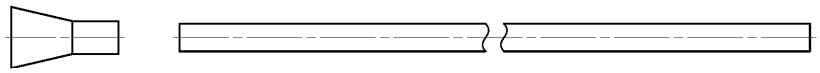

Cleaning brush BS

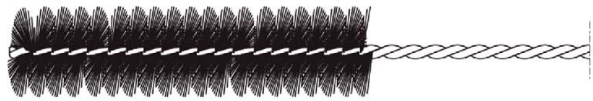

Blow-out pump AB G

Compressed-air cleaning tool ABP

Figures not to scale

fischer injection system FIS AB

Product description
Overview system components part 1;
cartridges / static mixer / accessories

Annex A 3

Overview system components part 2

fischer anchor rod

Size: M6, M8, M10, M12, M16, M20, M24, M27, M30

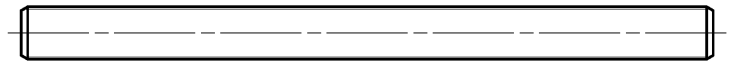

fischer internal threaded anchor RG M I

Size: M8, M10, M12, M16, M20

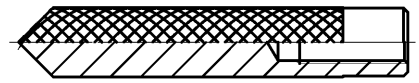

Screw / threaded rod / washer / hexagon nut

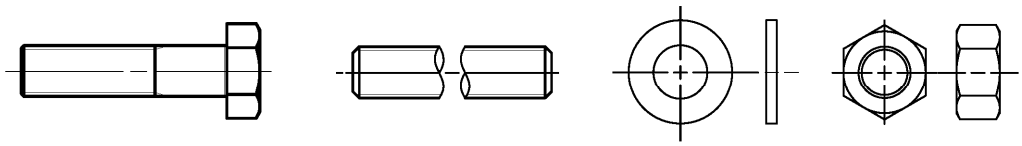

fischer filling disc with injection adapter

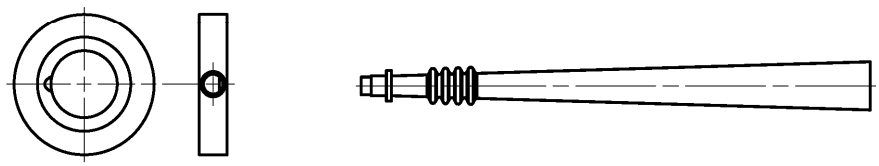

Reinforcing bar

Nominal diameter: ϕ8, ϕ10, ϕ12, ϕ14, ϕ16, ϕ20

Figures not to scale

Table A5.1: Materials

Part	Designation	Material		
1	Injection cartridge	Mortar, hardener, filler		
	Steel grade	Steel zinc plated	Stainless steel R acc. to EN 10088-1:2014 Corrosion resistance class CRC III acc. to EN 1993-1-4: 2006+A1:2015	High corrosion resistant steel HCR acc. to EN 10088-1:2014 Corrosion resistance class CRC V acc. to EN 1993-1-4: 2006+A1:2015
2	Anchor rod	Property class 4.6, 4.8, 5.8 or 8.8; EN ISO 898-1:2013 electroplated ≥ 5 µm, EN ISO 4042:2018/Zn5/An(A2K) or hot dip galvanised ≥ 40 µm EN ISO 10684:2004+AC:2009 f_{uk} ≤ 1000 N/mm² A_5 > 8% fracture elongation	Property class 50, 70 or 80 EN ISO 3506-1:2020 1.4401; 1.4404; 1.4578; 1.4571; 1.4439; 1.4362; 1.4062, 1.4662, 1.4462; EN 10088-1:2014 f_{uk} ≤ 1000 N/mm² A_5 > 8% fracture elongation	Property class 50 or 80 EN ISO 3506-1:2020 or property class 70 with f_{yk}= 560 N/mm²; 1.4565; 1.4529; EN 10088-1:2014 f_{uk} ≤ 1000 N/mm² A_5 > 8% fracture elongation
3	Washer ISO 7089:2000	electroplated ≥ 5 µm, EN ISO 4042:2018/Zn5/An(A2K) or hot dip galvanised ≥ 40 µm EN ISO 10684:2004+AC:2009	1.4401; 1.4404; 1.4578; 1.4571; 1.4439; 1.4362; EN 10088-1:2014	1.4565; 1.4529; EN 10088-1:2014
4	Hexagon nut	Property class 4, 5 or 8 acc. EN ISO 898-2:2012 electroplated ≥ 5 µm, EN ISO 4042:2018/Zn5/An(A2K) or hot dip galvanised ≥ 40 µm EN ISO 10684:2004+AC:2009	Property class 50, 70 or 80 acc. EN ISO 3506-2:2020 1.4401; 1.4404; 1.4578; 1.4571; 1.4439; 1.4362; EN 10088-1:2014	Property class 50, 70 or 80 acc. EN ISO 3506-2:2020 1.4565; 1.4529 EN 10088-1:2014
5	fischer internal threaded anchor RG M I	Property class 5.8 ISO 898-1:2013 electroplated ≥ 5 µm, EN ISO 4042:2018/Zn5/An(A2K)	Property class 70 EN ISO 3506-1:2020; 1.4401; 1.4404; 1.4578; 1.4571; 1.4439; 1.4362; EN 10088-1:2014	Property class 70 EN ISO 3506-1:2020 1.4565; 1.4529; EN 10088-1:2014
6	Commercial standard screw or threaded rod for fischer internal threaded anchor RG M I	Property class 5.8 or 8.8; EN ISO 898-1:2013 electroplated ≥ 5 µm, EN ISO 4042:2018/Zn5/An(A2K) A_5 > 8 % fracture elongation	Property class 70 EN ISO 3506-1:2020 1.4401; 1.4404; 1.4578; 1.4571; 1.4439; 1.4362; EN 10088-1:2014 A_5 > 8 % fracture elongation	Property class 70 EN ISO 3506-1:2020 1.4565; 1.4529; EN 10088-1:2014 A_5 > 8 % fracture elongation
7	fischer filling disc	electroplated ≥ 5 µm, EN ISO 4042:2018/Zn5/An(A2K) or hot dip galvanised ≥ 40 µm EN ISO 10684:2004+AC:2009	1.4401; 1.4404; 1.4578; 1.4571; 1.4439; 1.4362; EN 10088-1:2014	1.4565;1.4529; EN 10088-1:2014
8	Reinforcing bar EN 1992-1-1:2004 and AC:2010, Annex C	Bars and de-coiled rods, class B or C with f_{yk} and k according to NDP or NCI according to EN 1992-1-1:2004/NA $f_{uk} = f_{tk} = k \cdot f_{yk}$ (A_5 > 8%)		

Specifications of intended use part 1

Table B1.1: Overview use and performance categories

			FIS AB with …					
			Anchor rod		fischer internal threaded anchor RG M I		Reinforcing bar	
Hammer drilling with standard drill bit			all sizes					
Hammer drilling with hollow drill bit (fischer „FHD“, Heller „Duster Expert“; Bosch „Speed Clean“; Hilti „TE-CD, TE-YD“, DreBo „D-Plus“, DreBo „D-Max“			Nominal drill bit diameter (d_0) 12 mm to 35 mm					
Static and quasi static loading, in		uncracked concrete	all sizes	Tables: C1.1 C4.1 C5.1 C7.1	all sizes	Tables: C2.1 C4.1 C6.1 C7.2	all sizes	Tables: C3.1 C4.1 C6.2 C8.1
		cracked concrete	M8 to M20		-[1]		ϕ 10 to ϕ 20	
Seismic performance category		C1	-[1]					
		C2						
Use category	I1	dry or wet concrete	all sizes					
	I2	water filled hole [2]	M 12 to M 30		all sizes		-[1]	
Installation direction			D3 (downward and horizontal and upwards (e.g. overhead))					
Installation temperature			$T_{i,min}$ = -10 °C to $T_{i,max}$ = +40 °C					
Service temperature		Temperature range I	-40 °C to +80 °C		(max. short term temperature +80 °C; max. long term temperature +50 °C)			
		Temperature range II	-40 °C to +120 °C		(max. short term temperature +120 °C; max. long term temperature +72 °C)			

[1] Performance not assessed
[2] Valid for shuttle cartridges with 360 ml, 825 ml and coaxial cartridges with 380 ml, 400 ml, 410 ml

Specifications of intended use part 2

Base materials:

- Compacted reinforced or unreinforced normal weight concrete without fibres of strength classes C20/25 to C50/60 according to EN 206:2013+A1:2016

Use conditions (Environmental conditions):

- Structures subject to dry internal conditions
  (zinc coated steel, stainless steel or high corrosion resistant steel).
- For all other conditions according to EN1993-1-4:2006+A1:2015 corresponding to corrosion resistance classes to Annex A 5 Table 5.1.

Design:

- Fastenings are designed under the responsibility of an engineer experienced in fastenings and concrete work.
- Verifiable calculation notes and drawings are to be prepared taking account of the loads to be anchored. The position of the fastener is indicated on the design drawings (e. g. position of the fastener relative to reinforcement or to supports, etc.).
- Fastenings are designed in accordance with:
  EN 1992-4:2018 and EOTA Technical Report TR 055, Edition February 2018.

Installation:

- Fastener installation is to be carried out by appropriately qualified personnel and under the supervision of the person responsible for technical matters of the site
- Fastening depth should be marked and adhered to installation
- Overhead installation is allowed (necessary equipment see installation instruction)

Table B3.1: Installation parameters for **anchor rods**

Anchor rods		Thread	M6	M8	M10	M12	M16	M20	M24	M27	M30
Nominal drill hole diameter	d_0	[mm]	8	10	12	14	18	24	28	30	35
Drill hole depth	h_0		$h_0 \geq h_{ef}$								
Effective embedment depth	$h_{ef,\,min}$		50	60	60	70	80	90	96	108	120
	$h_{ef,\,max}$		72	160	200	240	320	400	480	540	600
Minimum spacing and minimum edge distance	s_{min} = c_{min}		40	40	45	55	65	85	105	125	140
Diameter of the clearance hole of the fixture – pre-positioned installation	d_f		7	9	12	14	18	22	26	30	33
Diameter of the clearance hole of the fixture – push through installation	d_f		9	12	14	16	20	26	30	33	40
Minimum thickness of concrete member	h_{min}		h_{ef} + 30 (≥100)				$h_{ef} + 2d_0$				
Maximum installation torque	max T_{inst}	[Nm]	5	10	20	40	60	120	150	200	300

fischer anchor rod

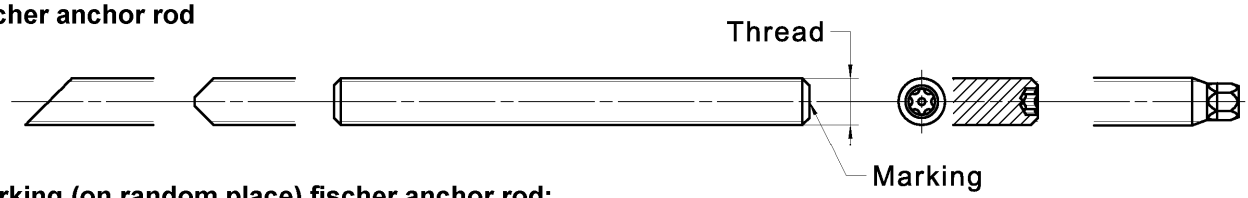

Marking (on random place) fischer anchor rod:

Steel zinc plated PC[1)] 8.8	● or +	Steel hot-dip PC[1)] 8.8	●
High corrosion resistant steel HCR PC[1)] 50	●	High corrosion resistant steel HCR PC[1)] 70	-
High corrosion resistant steel HCR PC[1)] 80	(	Stainless steel R property class 50[1)]	~
Stainless steel R property class 80[1)]	∗		
Alternatively: Colour coding according to DIN 976-1: 2016			

[1)] PC = property class

Installation conditions:

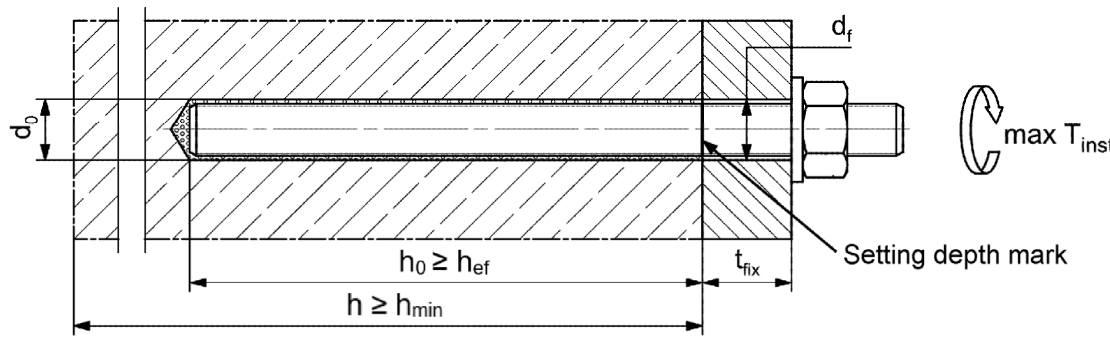

Commercial standard threaded rods, washers and hexagon nuts may also be used if the following requirements are fulfilled:

- Materials, dimensions and mechanical properties according to Annex A 5, Table A5.1
- Inspection certificate 3.1 according to EN 10204:2004, the documents have to be stored
- Setting depth is marked

Figures not to scale

Table B4.1: Installation parameters for **fischer internal threaded anchors RG M I**

Internal threaded anchors RG M I		Thread	M8	M10	M12	M16	M20
Diameter of anchor	$d_{nom} = d_H$	[mm]	12	16	18	22	28
Nominal drill hole diameter	d_0		14	18	20	24	32
Drill hole depth	h_0		$h_0 \geq h_{ef} = L_H$				
Effective embedment depth ($h_{ef} = L_H$)	h_{ef}		90	90	125	160	200
Minimum spacing and minimum edge distance	s_{min} = c_{min}		55	65	75	95	125
Diameter of clearance hole in the fixture	d_f		9	12	14	18	22
Minimum thickness of concrete member	h_{min}		120	125	165	205	260
Maximum screw-in depth	$l_{E,max}$		18	23	26	35	45
Minimum screw-in depth	$l_{E,min}$		8	10	12	16	20
Maximum installation torque	max T_{inst}	[Nm]	10	20	40	80	120

fischer internal threaded anchor RG M I

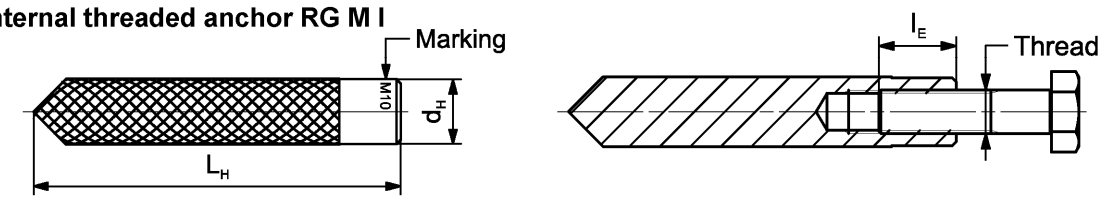

Marking: Anchor size e. g.: **M10**
Stainless steel → additional **R**; e.g.: **M10 R**
High corrosion resistant steel → additional **HCR**; e.g.: **M10 HCR**

Retaining bolt or threaded rods (including nut and washer) must comply with the appropriate material and strength class of Annex A 5, Table A5.1

Installation conditions:

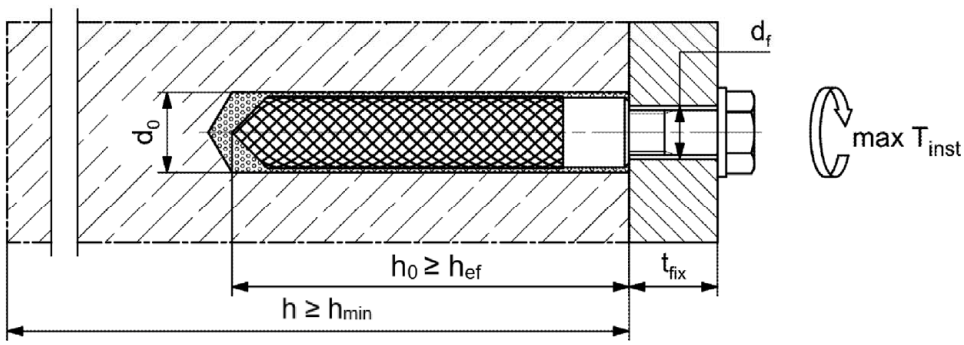

Figures not to scale

Table B5.1: Installation parameters for **reinforcing bars**

Nominal diameter of the bar		**ϕ**	**8[1)]**		**10[1)]**		**12[1)]**		**14**	**16**	**20**
Nominal drill hole diameter	d_0	[mm]	10	12	12	14	14	16	18	20	25
Drill hole depth	h_0		$h_0 \geq h_{ef}$								
Effective embedment depth	$h_{ef,min}$		60		60		70		75	80	90
	$h_{ef,max}$		160		200		240		280	320	400
Minimum spacing and minimum edge distance	s_{min} = c_{min}		40		45		55		60	65	85
Minimum thickness of concrete member	h_{min}		h_{ef} + 30 (≥ 100)					$h_{ef} + 2d_0$			

[1)] Both drill hole diameters can be used

Reinforcing bar

- The minimum value of related rib area $f_{R,min}$ must fulfil the requirements of EN 1992-1-1:2004+AC:2010
- The rib height must be within the range: $0{,}05 \cdot \phi \leq h_{rib} \leq 0{,}07 \cdot \phi$
  (ϕ = Nominal diameter of the bar, h_{rib} = rib height)

Installation conditions:

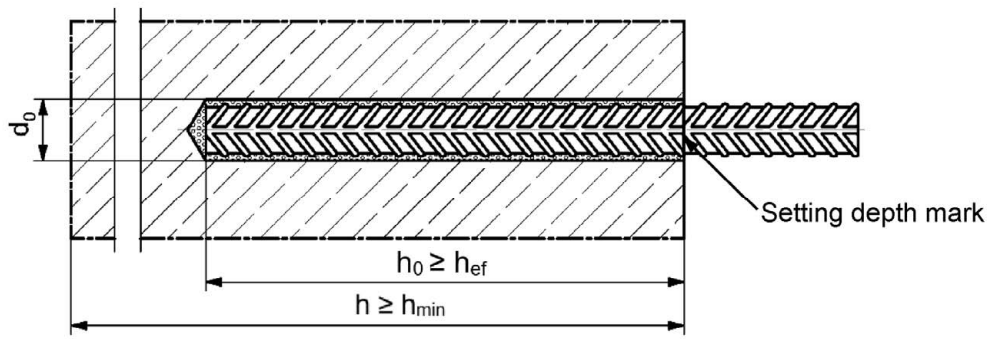

Figures not to scale

fischer injection system FIS AB

Intended use
Installation parameters reinforcing bars

Annex B 5

Table B6.1: Parameters of the **cleaning brush** BS (steel brush with steel bristles)

The size of the cleaning brush refers to the drill hole diameter

Nominal drill hole diameter	d_0	[mm]	8	10	12	14	16	18	20	24	25	28	30	35
Steel brush diameter BS	d_b		9	11	14	16	20		25	26	27	30	40	

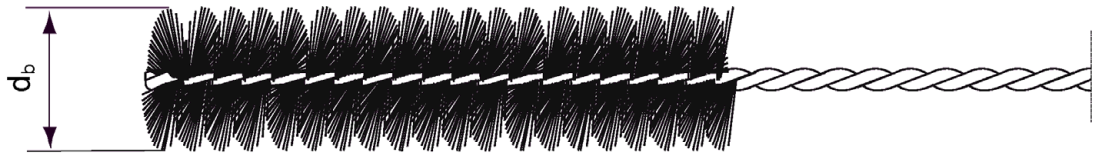

Table B6.2 **Maximum processing** time of the mortar and **minimum curing** time (During the curing time of the mortar the concrete temperature may not fall below the listed minimum temperature)

Temperature at anchoring base [°C]	Maximum processing time t_{work}			Minimum curing time [1] t_{cure}		
	FIS AB High Speed	FIS AB	FIS AB Low Speed	FIS AB High Speed	FIS AB	FIS AB Low Speed
-10 to -5 [2]	-	-	-	12 h	-	-
> -5 to 0 [2]	5 min	-	-	3 h	24 h	-
> 0 to 5 [2]	5 min	13 min	-	3 h	3 h	6 h
> 5 to 10	3 min	9 min	20 min	50 min	90 min	3 h
> 10 to 20	1 min	5 min	10 min	30 min	60 min	2 h
> 20 to 30	-	4 min	6 min	-	45 min	60 min
> 30 to 40	-	2 min	4 min	-	35 min	30 min

[1] In wet concrete or water filled holes the curing times must be doubled
[2] Minimal cartridge temperature +5°C

Installation instructions part 1

Drilling and cleaning the hole (hammer drilling with standard drill bit)

1	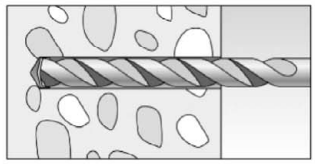	Drill the hole. Nominal drill hole diameter $\mathbf{d_0}$ and drill hole depth $\mathbf{h_0}$ see **tables B3.1, B4.1, B5.1**		
2	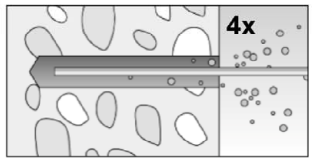	Clean the drill hole: For $h_{ef} \leq 12d$ and $d_0 < 18$ mm blow out the hole four times by hand	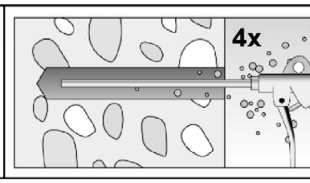	For $h_{ef} > 12d$ and / or $d_0 \geq 18$ mm blow out the hole four times with oil-free compressed air ($p \geq 6$ bar)
3	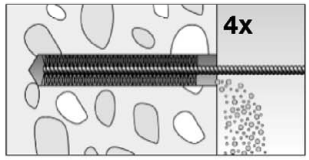	Brush the drill hole four times. For drill hole diameter ≥ 30 mm use a power drill. For deep holes use an extension. Corresponding brushes see **table B6.1**		
4	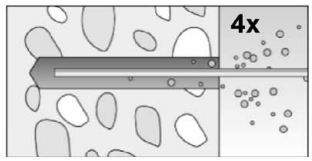	Clean the drill hole: For $h_{ef} \leq 12d$ and $d_0 < 18$ mm blow out the hole four times by hand	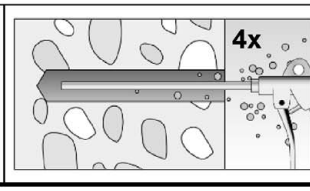	For $h_{ef} > 12d$ and / or $d_0 \geq 18$ mm blow out the hole four times with oil-free compressed air ($p \geq 6$ bar)

Go to step 5

Drilling and cleaning the hole (hammer drilling with hollow drill bit)

1		Check a suitable hollow drill (see **table B1.1**) for correct operation of the dust extraction
2	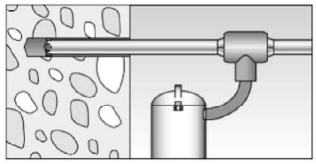	Use a suitable dust extraction system, e.g. fischer FVC 35 M or a comparable dust extraction system with equivalent performance data Drill the hole with hollow drill bit. The dust extraction system has to extract the drill dust nonstop during the drilling process and must be adjusted to maximum power. Nominal drill hole diameter $\mathbf{d_0}$ and drill hole depth $\mathbf{h_0}$ see **tables B3.1, B4.1, B5.1**

Go to step 5

Installation instructions part 2

Preparing the cartridge

5	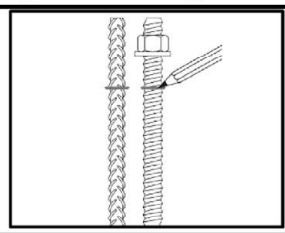	Mark the setting depth.
6	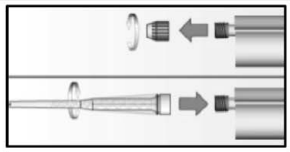	Remove the sealing cap Screw on the static mixer (the spiral in the static mixer must be clearly visible)
7	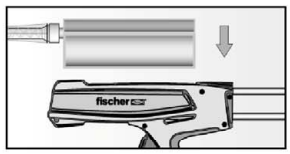 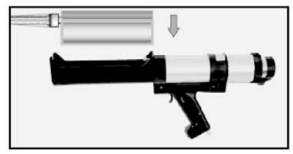	Place the cartridge into the dispenser
8	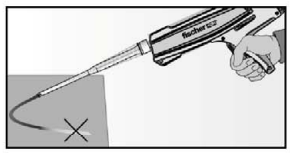 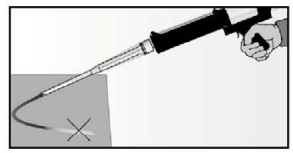	Extrude approximately 10 cm of material out until the resin is evenly grey in colour. Do not use mortar that is not uniformly grey

Go to step 9

Injection of the mortar

9	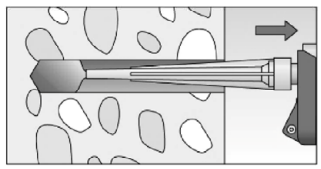 For $h_0 = h_{ef}$ fill approximately 2/3 of the drill hole with mortar. For $h_0 > h_{ef}$ more mortar is needed. Always begin from the bottom of the hole and avoid bubbles	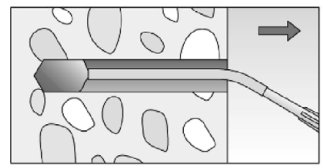 For drill hole depth ≥ 150 mm use an extension tube	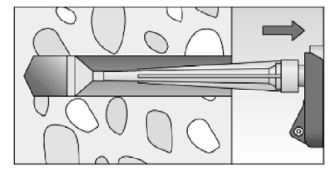 For overhead installation, deep holes (h_0 > 250 mm) use an injection adapter

Go to step 10

Installation instructions part 3

Installation of anchor rods or fischer internal threaded anchors RG M I

10

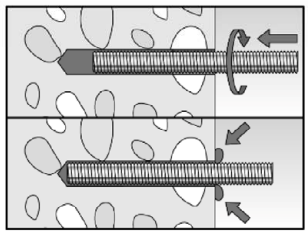

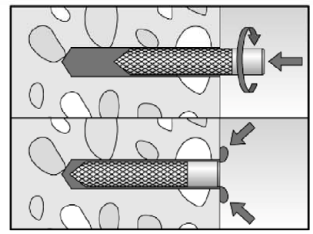

Only use clean and oil-free metal parts.
Push the anchor rod or fischer internal threaded RG M I anchor down to the bottom of the hole, turning it slightly while doing so.
After inserting the metal parts, excess mortar must be emerged around the anchor element.

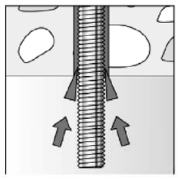

For overhead installations support the metal part with wedges (e.g. fischer centering wedges) or fischer overhead clips.

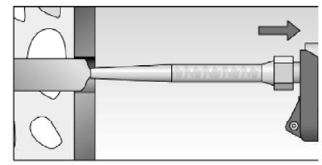

For push through installation fill the annular gap with mortar

11

Wait for the specified curing time t_{cure}
see **table B6.2**

12

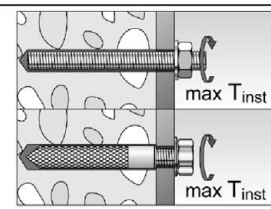

Mounting the fixture
max T_{inst} see **tables B3.1 and B4.1**

Option

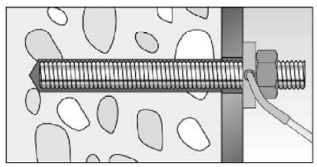

After the minimum curing time is reached, the gap between metal part and fixture (annular clearance) may be filled with mortar via the fischer filling disc.
Compressive strength ≥ 50 N/mm² (e.g. fischer injection mortars FIS AB, FIS HB, FIS SB, FIS V, FIS V Plus, FIS EM Plus).
ATTENTION: Using fischer filling disc reduces t_{fix} (usable length of the anchor)

Installation reinforcing bars

10

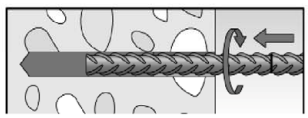

Only use clean and oil-free reinforcing bars. Push the reinforcement bar with the setting depth mark into the filled hole up to the setting depth mark.
Recommendation:
Rotation back and forth of the reinforcement bar or the fischer rebar anchor makes pushing easy

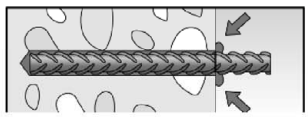

When the setting depth mark is reached, excess mortar must be emerged from the mouth of the drill hole.

11

Wait for the specified curing time t_{cure} see **table B6.2**

Table C1.1: Characteristic resistance to **steel failure** under **tension / shear loading** of **fischer anchor rods** and **standard threaded rods**

Anchor rod / standard threaded rod				M6	M8	M10	M12	M16	M20	M24	M27	M30
Characteristic resistance to steel failure under tension loading [3]												
Characteristic resistance $N_{Rk,s}$	Steel zinc plated	Property class	4.6	[kN]	8	15(13)	23(21)	33	63	98	141	184	224
			4.8		8	15(13)	23(21)	33	63	98	141	184	224
			5.8		10	19(17)	29(27)	43	79	123	177	230	281
			8.8		16	29(27)	47(43)	68	126	196	282	368	449
	Stainless steel R and high corrosion resistant steel HCR		50		10	19	29	43	79	123	177	230	281
			70		14	26	41	59	110	172	247	322	393
			80		16	30	47	68	126	196	282	368	449
Partial factors [1]												
Partial factor $\gamma_{Ms,N}$	Steel zinc plated	Property class	4.6	[-]	2.00							
			4.8		1.50							
			5.8		1.50							
			8.8		1.50							
	Stainless steel R and high corrosion resistant steel HCR		50		2.86							
			70		1.50 [2] / 1.87							
			80		1.60							
Characteristic resistance to steel failure under shear loading [3]												
without lever arm												
Characteristic resistance $V^0_{Rk,s}$	Steel zinc plated	Property class	4.6	[kN]	4	9(8)	14(13)	20	38	59	85	110	135
			4.8		4	9(8)	14(13)	20	38	59	85	110	135
			5.8		6	11(10)	17(16)	25	47	74	106	138	168
			8.8		8	15(13)	23(21)	34	63	98	141	184	225
	Stainless steel R and high corrosion resistant steel HCR		50		5	9	15	21	39	61	89	115	141
			70		7	13	20	30	55	86	124	161	197
			80		8	15	23	34	63	98	141	184	225
Ductility factor		k_7		[-]	1,0							
with lever arm												
Characteristic resistance $M^0_{Rk,s}$	Steel zinc plated	Property class	4.6	[Nm]	6	15(13)	30(27)	52	133	259	448	665	899
			4.8		6	15(13)	30(27)	52	133	259	448	665	899
			5.8		7	19(16)	37(33)	65	166	324	560	833	1123
			8.8		12	30(26)	60(53)	105	266	519	896	1333	1797
	Stainless steel R and high corrosion resistant steel HCR		50		7	19	37	65	166	324	560	833	1123
			70		10	26	52	92	232	454	784	1167	1573
			80		12	30	60	105	266	519	896	1333	1797
Partial factors [1]												
Partial factor $\gamma_{Ms,V}$	Steel zinc plated	Property class	4.6	[-]	1.67							
			4.8		1.25							
			5.8		1.25							
			8.8		1.25							
	Stainless steel R and high corrosion resistant steel HCR		50		2.38							
			70		1.25 [2] / 1.56							
			80		1.33							

[1] In absence of other national regulations
[2] Only admissible for high corrosion resist. steel HCR, with $f_{yk} / f_{uk} \geq 0,8$ and $A_5 > 12$ % (e.g. fischer anchor rods)
[3] Values in brackets are valid for hot dip galvanised fischer anchors and hot dip galvanised standard threaded-rods

Table C2.1: Characteristic resistance to **steel failure** under tension / shear loading of **fischer internal threaded anchors RG M I**

fischer internal threaded anchors RG M I					M8	M10	M12	M16	M20
Characteristic resistance to steel failure under tension loading									
Characteristic resistance with screw	$N_{Rk,s}$	Property class	5.8	[kN]	19	29	43	79	123
			8.8		29	47	68	108	179
		Property class 70	R		26	41	59	110	172
			HCR		26	41	59	110	172
Partial factors[1)]									
Partial factors	$\gamma_{Ms,N}$	Property class	5.8	[-]	1,50				
			8.8		1,50				
		Property class 70	R		1,87				
			HCR		1,87				
Characteristic resistance to steel failure under shear loading									
Without lever arm									
Characteristic resistance with screw	$V^0_{Rk,s}$	Property class	5.8	[kN]	9,2	14,5	21,1	39,2	62,0
			8.8		14,6	23,2	33,7	54,0	90,0
		Property class 70	R		12,8	20,3	29,5	54,8	86,0
			HCR		12,8	20,3	29,5	54,8	86,0
Ductility factor			k_7	[-]	1,0				
With lever arm									
Characteristic resistance with screw	$M^0_{Rk,s}$	Property class	5.8	[Nm]	20	39	68	173	337
			8.8		30	60	105	266	519
		Property class 70	R		26	52	92	232	454
			HCR		26	52	92	232	454
Partial factors[1)]									
Partial factors	$\gamma_{Ms,V}$	Property class	5.8	[-]	1,25				
			8.8		1,25				
		Property class 70	R		1,56				
			HCR		1,56				

[1)] In absence of other national regulations

Table C3.1: Characteristic restistance to **steel failure** under tension / shear loading of **reinforcing bars**

Nominal diameter of the bar		**ϕ**	**8**	**10**	**12**	**14**	**16**	**20**
Characteristic resistance to steel failure under tension loading								
Characteristic resistance	$N_{Rk,s}$	[kN]	$A_s \cdot f_{uk}$ [2)]					
Characteristic resistance to steel failure under shear loading								
Without lever arm								
Characteristic resistance	$V^0_{Rk,s}$	[kN]	k_6 [1)] $\cdot A_s \cdot f_{uk}$ [2)]					
Ductility factor	k_7	[-]	1,0					
With lever arm								
Characteristic resistance	$M^0_{Rk,s}$	[Nm]	$1{,}2 \cdot W_{el} \cdot f_{uk}$ [2)]					

1) In accordance with EN 1992-4:2018 section 7.2.2.3.1
k_6 = 0,6 for fasteners made of carbon steel with $f_{uk} \leq 500$ N/mm²
= 0,5 for fasteners made of carbon steel with $500 < f_{uk} \leq 1000$ N/mm²
= 0,5 for fasteners made of stainless steel

2) f_{uk} respectively must be taken from the specifications of the reinforcing bar

Table C4.1: Characteristic resistance to **concrete failure** under **tension / shear loading**

Size			**All sizes**
Characteristic resistance to concrete failure under tension loading			
Installation factor	γ_{inst}	[-]	See annex C 5 to C 6
Factors for the compressive strength of concrete > C20/25			
Increasing factor ψ_c for cracked or uncracked concrete $\tau_{Rk} = \psi_c \cdot \tau_{Rk}$ (C20/25)	C25/30	[-]	1,05
	C30/37		1,10
	C35/45		1,15
	C40/50		1,19
	C45/55		1,22
	C50/60		1,26
Splitting failure			
Edge distance	$h / h_{ef} \geq 2{,}0$	$c_{cr,sp}$ [mm]	$1{,}0\ h_{ef}$
	$2{,}0 > h / h_{ef} > 1{,}3$		$4{,}6\ h_{ef} - 1{,}8\ h$
	$h / h_{ef} \leq 1{,}3$		$2{,}26\ h_{ef}$
Spacing	$s_{cr,sp}$	[mm]	$2\ c_{cr,sp}$
Concrete failure			
Uncracked concrete	$k_{ucr,N}$	[-]	11,0
Cracked concrete	$k_{cr,N}$	[-]	7,7
Edge distance	$c_{cr,N}$	[mm]	$1{,}5\ h_{ef}$
Spacing	$s_{cr,N}$	[mm]	$2\ c_{cr,N}$

Factors for sustained tension loading				
Temperature range		[°C]	50 / 80	72 / 120
Factor	ψ^0_{sus}	[-]	0,74	0,87

Characteristic resistance to concrete failure under shear loading			
Installation factor	γ_{inst}	[-]	1,0
Concrete pry-out failure			
Factor for pry-out failure	k_8	[-]	2,0
Concrete edge failure			
Effective length of fastener in shear loading	l_f	[mm]	for $d_{nom} \leq 24$ mm: min (h_{ef}; 12 d_{nom}) for $d_{nom} > 24$ mm: min (h_{ef}; 8 d_{nom}; 300 mm)

Calculation diameters											
Size			M6	M8	M10	M12	M16	M20	M24	M27	M30
fischer anchor rods and standard threaded rods	d_{nom}	[mm]	6	8	10	12	16	20	24	27	30
fischer internal threaded anchors RG M I	d_{nom}	[mm]	-[1)]	12	16	18	22	28	-[1)]	-[1)]	-[1)]

Size (nominal diameter of the bar)	ϕ	[mm]	8	10	12	14	16	20
Reinforcing bar	d_{nom}	[mm]	8	10	12	14	16	20

[1)] Anchor type not part of this assessment

Table C5.1: Characteristic resistance to **combined pull-out** and **concrete failure** for **fischer anchor rods** and **standard threaded rods** in hammer drilled holes; **uncracked or cracked concrete**

Anchor rod / standard threaded rod				**M6**	**M8**	**M10**	**M12**	**M16**	**M20**	**M24**	**M27**	**M30**
Combined pull-out and concrete cone failure												
Calculation diameter		d	[mm]	6	8	10	12	16	20	24	27	30
Uncracked concrete												
Characteristic bond resistance in uncracked concrete C20/25												
Hammer-drilling with standard drill bit or hollow drill bit (dry or wet concrete)												
Temperature range	I: 50 °C / 80 °C	$\tau_{Rk,ucr}$	[N/mm²]	9,0	11,0	11,0	11,0	10,0	9,5	9,0	8,5	8,5
	II: 72 °C / 120 °C			6,5	9,5	9,5	9,0	8,5	8,0	7,5	7,0	7,0
Hammer-drilling with standard drill bit or hollow drill bit (water filled hole)												
Temperature range	I: 50 °C / 80 °C	$\tau_{Rk,ucr}$	[N/mm²]	-[2]	-[2]	-[2]	9,5	8,5	8,0	7,5	7,0	7,0
	II: 72 °C / 120 °C			-[2]	-[2]	-[2]	7,5	7,0	6,5	6,0	6,0	6,0
Installation factors												
Dry or wet concrete		γ_{inst}	[-]	1,0								
Water filled hole				-[2]	-[2]	-[2]	1,2 [1]					
Cracked concrete												
Characteristic bond resistance in cracked concrete C20/25												
Hammer-drilling with standard drill bit or hollow drill bit (dry or wet concrete)												
Temperature range	I: 50 °C / 80 °C	$\tau_{Rk,cr}$	[N/mm²]	-[2]	5,5	6,0	6,0	6,0	5,5	-[2]	-[2]	-[2]
	II: 72 °C / 120 °C			-[2]	4,5	5,0	6,0	6,0	5,0	-[2]	-[2]	-[2]
Hammer-drilling with standard drill bit or hollow drill bit (water filled hole)												
Temperature range	I: 50 °C / 80 °C	$\tau_{Rk,cr}$	[N/mm²]	-[2]	-[2]	-[2]	5,0	5,0	4,5	-[2]	-[2]	-[2]
	II: 72 °C / 120 °C			-[2]	-[2]	-[2]	4,0	4,0	4,0	-[2]	-[2]	-[2]
Installation factors												
Dry or wet concrete		γ_{inst}	[-]	-[2]	1,0					-[2]	-[2]	-[2]
Water filled hole				-[2]	-[2]	-[2]	1,2 [1]			-[2]	-[2]	-[2]

[1] Valid for shuttle cartridges with 360 ml, 825 ml and coaxial cartridges with 380 ml, 400 ml, 410 ml
[2] Performance not assessed

Table C6.1: Characteristic resistance to **combined pull-out** and **concrete failure** for **fischer internal threaded anchors RG M I** in hammer drilled holes; **uncracked concrete**

Internal threaded anchor RG M I				**M8**	**M10**	**M12**	**M16**	**M20**
Combined pull-out and concrete cone failure								
Calculation diameter		d	[mm]	12	16	18	22	28
Uncracked concrete								
Characteristic bond resistance in uncracked concrete C20/25								
Hammer-drilling with standard drill bit or hollow drill bit (dry or wet concrete)								
Temperature range	I: 50 °C / 80 °C	$\tau_{Rk,ucr}$	[N/mm²]	10,5	10,0	9,5	9,0	8,5
	II: 72 °C / 120 °C			9,0	8,0	8,0	7,5	7,0
Hammer-drilling with standard drill bit or hollow drill bit (water filled hole)								
Temperature range	I: 50 °C / 80 °C	$\tau_{Rk,ucr}$	[N/mm²]	10,0	9,0	9,0	8,5	8,0
	II: 72 °C / 120 °C			7,5	6,5	6,5	6,0	6,0
Installation factors								
Dry or wet concrete		γ_{inst}	[-]	1,0				
Water filled hole				1,2 [1)]				

[1)] Valid for shuttle cartridges with 360 ml, 825 ml and coaxial cartridges with 380 ml, 400 ml, 410 ml

Table C6.2: Characteristic resistance to **combined pull-out** and **concrete failure** for **reinforcing bars** in hammer drilled holes; **uncracked or cracked concrete**

Nominal diameter of the bar			**ϕ**	**8**	**10**	**12**	**14**	**16**	**20**
Combined pull-out and concrete cone failure									
Calculation diameter		d	[mm]	8	10	12	14	16	20
Uncracked concrete									
Characteristic bond resistance in uncracked concrete C20/25									
Hammer-drilling with standard drill bit or hollow drill bit (dry or wet concrete)									
Temperature range	I: 50 °C / 80 °C	$\tau_{Rk,ucr}$	[N/mm²]	11,0	11,0	11,0	10,0	10,0	9,5
	II: 72 °C / 120 °C			9,5	9,5	9,0	8,5	8,5	8,0
Installation factor									
Dry or wet concrete		γ_{inst}	[-]	1,0					
Cracked concrete									
Characteristic bond resistance in cracked concrete C20/25									
Hammer-drilling with standard drill bit or hollow drill bit (dry or wet concrete)									
Temperature range	I: 50 °C / 80 °C	$\tau_{Rk,cr}$	[N/mm²]	-[1)]	3,0	5,0	5,0	5,0	4,5
	II: 72 °C / 120 °C			-[1)]	3,0	4,5	4,5	4,5	4,0
Installation factor									
Dry or wet concrete		γ_{inst}	[-]	-[1)]	1,0				

[1)] Performance not assessed

Table C7.1: Displacements for anchor rods

Anchor rod		M6	M8	M10	M12	M16	M20	M24	M27	M30
Displacement-Factors for tension loading[1)]										
Uncracked concrete; Temperature range I, II										
$\delta_{N0\text{-Factor}}$	[mm/(N/mm²)]	0,09	0,09	0,09	0,10	0,10	0,10	0,10	0,11	0,12
$\delta_{N\infty\text{-Factor}}$	[mm/(N/mm²)]	0,10	0,10	0,10	0,12	0,12	0,12	0,13	0,13	0,14
Cracked concrete; Temperature range I, II										
$\delta_{N0\text{-Factor}}$	[mm/(N/mm²)]	-[3)]	0,12	0,12	0,12	0,13	0,13	-[3)]	-[3)]	-[3)]
$\delta_{N0\text{-Factor}}$	[mm/(N/mm²)]	-[3)]	0,25	0,27	0,30	0,30	0,30	-[3)]	-[3)]	-[3)]
Displacement-Factors for shear loading[2)]										
Uncracked or cracked concrete; Temperature range I, II										
$\delta_{V0\text{-Factor}}$	[mm/kN]	0,11	0,11	0,11	0,10	0,10	0,09	0,09	0,08	0,07
$\delta_{V\infty\text{-Factor}}$	[mm/kN]	0,12	0,12	0,12	0,11	0,11	0,10	0,10	0,09	0,09

1) Calculation of effective displacement:

$\delta_{N0} = \delta_{N0\text{-Factor}} \cdot \tau$

$\delta_{N\infty} = \delta_{N\infty\text{-Factor}} \cdot \tau$

τ = acting bond strength under tension loading

2) Calculation of effective displacement:

$\delta_{V0} = \delta_{V0\text{-Factor}} \cdot V$

$\delta_{V\infty} = \delta_{V\infty\text{-Factor}} \cdot V$

V = acting shear loading

3) Performance not assessed

Table C7.2: Displacements for fischer internal threaded anchors RG M I

Internal threaded anchor RG M I		M8	M10	M12	M16	M20
Displacement-Factors for tension loading[1)]						
Uncracked concrete; Temperature range I, II						
$\delta_{N0\text{-Factor}}$	[mm/(N/mm²)]	0,10	0,11	0,12	0,13	0,14
$\delta_{N\infty\text{-Factor}}$	[mm/(N/mm²)]	0,13	0,14	0,15	0,16	0,18
Displacement-Factors for shear loading[2)]						
Uncracked concrete; Temperature range I, II						
$\delta_{V0\text{-Factor}}$	[mm/kN]	0,12	0,12	0,12	0,12	0,12
$\delta_{V\infty\text{-Factor}}$	[mm/kN]	0,14	0,14	0,14	0,14	0,14

1) Calculation of effective displacement:

$\delta_{N0} = \delta_{N0\text{-Factor}} \cdot \tau$

$\delta_{N\infty} = \delta_{N\infty\text{-Factor}} \cdot \tau$

τ = acting bond strength under tension loading

2) Calculation of effective displacement:

$\delta_{V0} = \delta_{V0\text{-Factor}} \cdot V$

$\delta_{V\infty} = \delta_{V\infty\text{-Factor}} \cdot V$

V = acting shear loading

Table C8.1: Displacements for reinforcing bars

Nominal diameter of the bar	ϕ	8	10	12	14	16	20
Displacement-Factors for tension loading[1)]							
Uncracked concrete; Temperature range I, II							
$\delta_{N0\text{-Factor}}$	[mm/(N/mm²)]	0,09	0,09	0,10	0,10	0,10	0,10
$\delta_{N\infty\text{-Factor}}$		0,10	0,10	0,12	0,12	0,12	0,12
Cracked concrete; Temperature range I, II							
$\delta_{N0\text{-Factor}}$	[mm/(N/mm²)]	-[3)]	0,12	0,13	0,13	0,13	0,13
$\delta_{N\infty\text{-Factor}}$		-[3)]	0,27	0,30	0,30	0,30	0,30
Displacement-Factors for shear loading[2)]							
Uncracked or cracked concrete; Temperature range I, II							
$\delta_{V0\text{-Factor}}$	[mm/kN]	0,11	0,11	0,10	0,10	0,10	0,09
$\delta_{V\infty\text{-Factor}}$		0,12	0,12	0,11	0,11	0,11	0,10

1) Calculation of effective displacement:

$\delta_{N0} = \delta_{N0\text{-Factor}} \cdot \tau$

$\delta_{N\infty} = \delta_{N\infty\text{-Factor}} \cdot \tau$

τ = acting bond strength under tension loading

2) Calculation of effective displacement:

$\delta_{V0} = \delta_{V0\text{-Factor}} \cdot V$

$\delta_{V\infty} = \delta_{V\infty\text{-Factor}} \cdot V$

V = acting shear loading

3) Performance not assessed