VYHLÁSENIE O PARAMETROCH

DoP 0380

pre fasádnu kotvu fischer-Zykon FZP II SK

1. Jedinečný identifikačný kód typu výrobku: **DoP 0380**

2. Zamýšľané použitie/použitia: **Kotviaci materiál na skryté upevnenie fasádnych panelov z vybraných prírodných kameňov podľa EN 1469, Pozri prílohu, najmä prílohy B1 - B7.**

3. Výrobca: **fischerwerke GmbH & Co. KG, Klaus-Fischer-Str. 1, 72178 Waldachtal, Nemecko**

4. Splnomocnený zástupca: **–**

5. Systém(-y) posudzovania a overovania nemennosti parametrov: **2+**

6. Európsky hodnotiaci dokument: **EAD 330030-00-0601, Edition 10/2018**
   Európske technické posúdenie: **ETA-11/0145; 2024-08-22**
   Orgán technického posudzovania: **DIBt- Deutsches Institut für Bautechnik**
   Notifikovaný(-é) subjekt(-y): **2873 TU Darmstadt**

7. Deklarované parametre:

Mechanická odolnosť a stabilita (BWR 1)

Charakteristická odolnosť voči porušeniu alebo vytrhnutiu pri zaťažení ťahom.: Prílohe C1	α_{TR}= NPD
Charakteristická odolnosť voči porušeniu alebo vytrhnutiu pri zaťažení šmykom.: Prílohe C1	
Charakteristická odolnosť voči porušeniu alebo vytrhnutiu pri kombinovanom zaťažení ťahom aj šmykom: Prílohe C1	Y=NPD; F_{Rk}=NPD

Okrajová a osová vzdialenos: Prílohy B3, C1
životnosť: Prílohe A3, ((CRC) III - EN 1993-1-4:2015)
Charakteristická odolnosť voči porušeniu ocele pri zaťažení ťahom a šmykom: Prílohe C1

Bezpečnosť v prípade požiaru (BWR 2)
Reakcia na oheň: Trieda (A1)

8. Vhodná technická dokumentácia a/alebo špecifická technická dokumentácia: **–**

Uvedené parametre výrobku sú v zhode so súborom deklarovaných parametrov. Toto vyhlásenie o parametroch sa v súlade s nariadením (EÚ) č. 305/2011 vydáva na výhradnú zodpovednosť uvedeného výrobcu.

Podpísal(-a) za a v mene výrobcu:

Dr. Ronald Mihala, Vedúci oddelenia vývoja a riadenia výroby

Dieter Pfaff, Vedúci Medzinárodnej produkčnej federácie a riadenia kvality

Tumlingen, 2025-02-05

Toto vyhlásenie o vlastnostiach bolo vyhotovené v rôznych jazykoch. V prípade, že dôjde k rozdielnemu výkladu má anglická verzia vždy prednosť.
Príloha obsahuje dobrovoľné a doplňujúce informácie v anglickom jazyku. Tieto vychádzajú zo zákonom stanovených požiadaviek (jazykovo neutrálnych) .

Translation guidance Essential Characteristics and Performance Parameters for Annexes

Základné charakteristiky a parametre výkonu – pokyny na preklad pre prílohy

Mechanical resistance and stability (BWR 1) **Mechanická odolnosť a stabilita (BWR 1)**		
1	Characteristic resistance to breakout or pull-out failure under tension load: **Charakteristická odolnosť voči porušeniu alebo vytrhnutiu pri zaťažení ťahom.:**	N_{Rk} [kN], For natural stone: α_{TR} [-]
2	Characteristic resistance to breakout or pull-out failure under shear load: **Charakteristická odolnosť voči porušeniu alebo vytrhnutiu pri zaťažení šmykom.:**	V_{Rk} [kN]
3	Characteristic resistance to breakout or pull-out failure under combined tension and shear load: **Charakteristická odolnosť voči porušeniu alebo vytrhnutiu pri kombinovanom zaťažení ťahom aj šmykom:**	X [-], Y [-], F_{Rk} [kN], β
4	Edge distance and spacing: **Okrajová a osová vzdialenos:**	a_r [mm], a [mm]
5	Durability: **životnosť:**	CRC
6	Characteristic resistance to steel failure under tension and shear load: **Charakteristická odolnosť voči porušeniu ocele pri zaťažení ťahom a šmykom:**	$N_{Rk,s}$ [kN], $V_{Rk,s}$ [kN]
Safety in case of fire (BWR 2) **Bezpečnosť v prípade požiaru (BWR 2)**		
7	Reaction to fire: **Reakcia na oheň:**	Class Trieda (A1)

Specific Part

1 Technical description of the product

The fischer-Zykon-panel anchor FZP II is a special anchor of sizes M 6, M 8 and M 10 which consists of a cone bolt (with external thread or internal thread), an expansion part, a sleeve and, if need be, a nut. Cone bolt and expansion part are made of stainless steel. The sleeve is made of stainless steel or carbon. The nut is made of stainless steel or aluminium. The anchor is put into an undercut drill hole and by driving-in of the sleeve it is placed form-fit.

The product description is given in Annex A. The material values, dimensions and tolerances of the components of the fastener not indicated in the annexes shall correspond to the values laid down in the technical documentation.

2 Specification of the intended use in accordance with the applicable European Assessment Document

The performances given in Section 3 are only valid if the anchor is used in compliance with the specifications and conditions given in Annex B.

The verifications and assessment methods on which this European Technical Assessment is based lead to the assumption of a working life of the anchors of at least 50 years. The indications given on the working life cannot be interpreted as a guarantee given by the producer, but are to be regarded only as a means for choosing the right products in relation to the expected economically reasonable working life of the works.

3 Performance of the product and references to the methods used for its assessment

3.1 Mechanical resistance and stability (BWR 1)

Essential characteristic	Performance
Characteristic resistance to breakout or pull-out failure under tension load	See Annex C 1
Characteristic resistance to breakout or pull-out failure under shear load	See Annex C 1
Characteristic resistance to breakout or pull-out failure under combined tension and shear load	See Annex C 1
Edge distance and spacing	See Annex B 3 and Annex C 1
Durability	Corrosion Resistance Class (CRC) III in accordance with EN 1993-1-4:2015
Characteristic resistance to steel failure under tension and shear loads	See Annex C 1

3.2 Safety in case of fire (BWR 2)

Essential characteristic	Performance
Reaction to fire	Class A1

4 Assessment and verification of constancy of performance (AVCP) system applied, with reference to its legal base

In accordance with EAD No. 330030-00-0601 the applicable European legal act is: [97/161/EG].
The system to be applied is: 2+

Installed fastener

Figure A1:

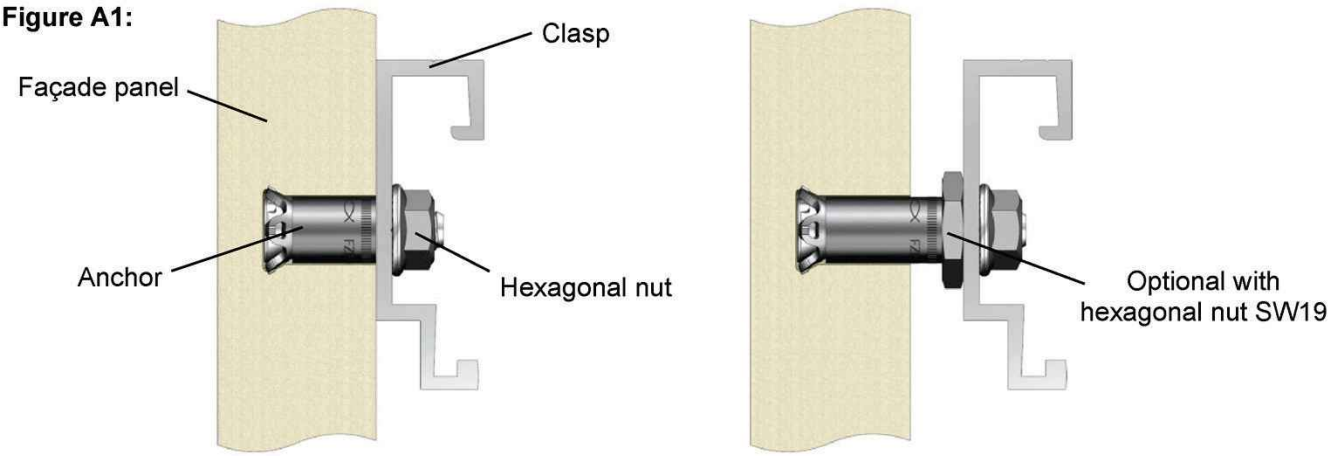

Example for a Flush fixing

Example for a Stand-off fixing

Example of façade panel on substructure

Figure A2:

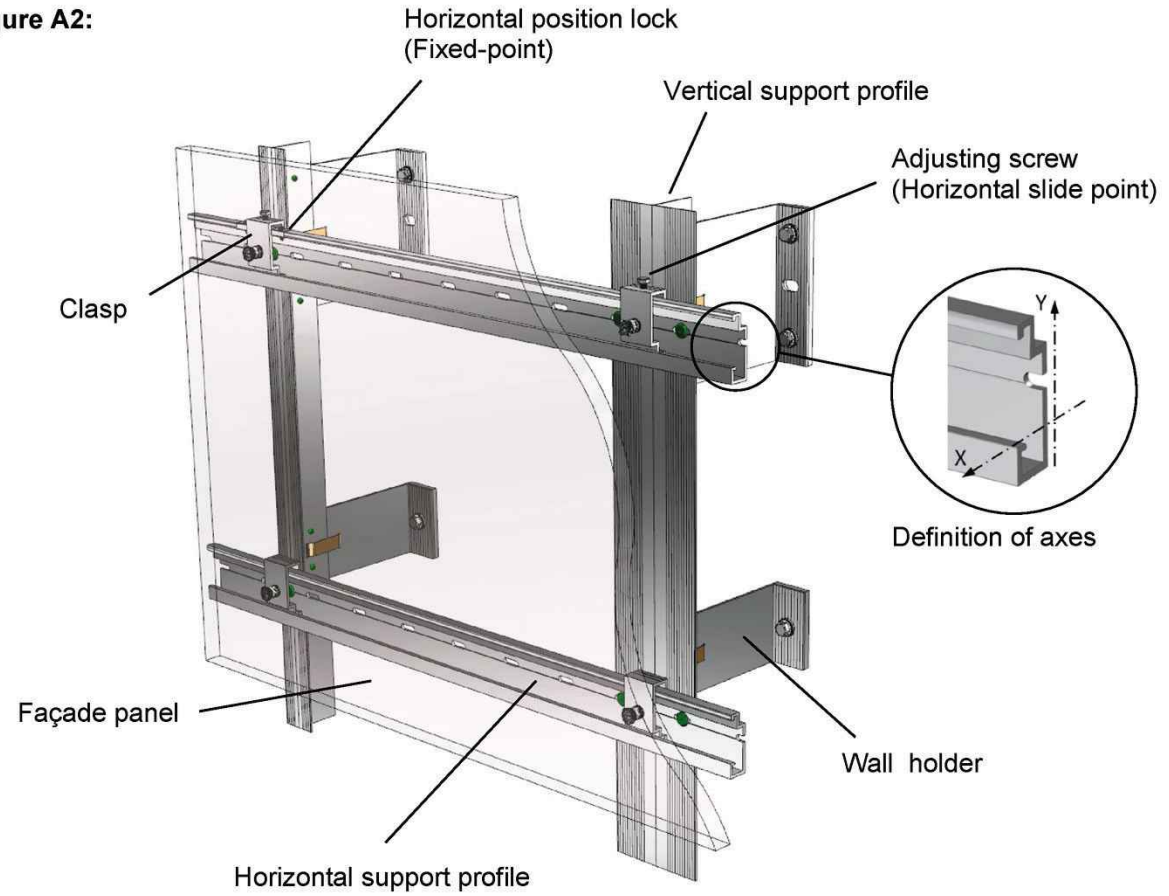

fischer Zykon panel anchor FZP	**Annex A 1**
Product description Installed anchoring and fixing example	Appendix 3 / 13

Type of anchor

Anchor with external thread

Figure A3:

With carbon fibre sleeve

With steel sleeve

Optionally with expansion part HP [1)]

With carbon fibre sleeve and sleeve flange

With Steel sleeve and hex nut SW19

With steel sleeve and hex nut ES [2)]

Anchor with internal thread

Figure A4:

With carbon fibre sleeve

With steel sleeve

[1)] HP anchor (**H**igh **P**erformance anchor for applications in high-strength rock)

[2)] Hex nut ES for suspension systems

Identification system

Example. FZP II 13 x 26 M8 / SO / 17 AI

- AI — Material of the hexagon nut SW19
- 17 — Free thread length **b** after mounting
- SO — **S**tand **O**ff fixing
- M8 — Thread diameter
- 26 — Anchor length in spread condition
- 13 — Ø Cylindrical drill hole d_0
- FZP — **F**ischer **Z** (Cylindrical conical) **P**anel anchor **II**

Parts of anchor and materials

Cone bolt

Figure A6:

With external thread
M6 / M8 / M10
Optional with UNC thread

With internal thread
M6 / M8
Optional with UNC thread

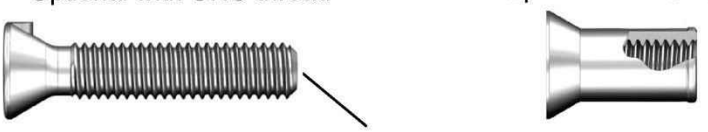

Material identification

Optional:
Anti rotation lock
Nose or frontal profiling

Optional:
Identifying mark, drive, e.g.: Slot; polygonal (Outside; inside); spanner flats

Expansion part

Figure A7:

Standard

Version HP

Sleeve

Figure A8:

Carbonfibre

Stainless steel
Lathe machined

Bent

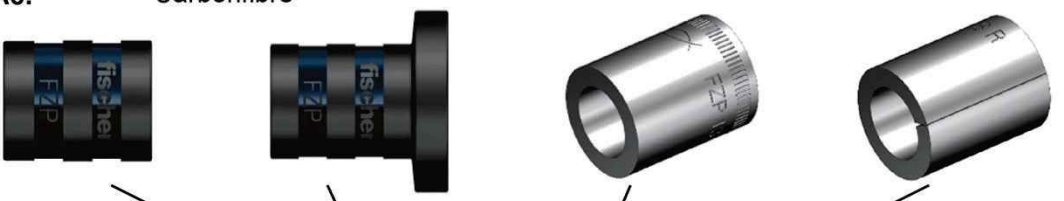

Type designation e.g. FZP…

Supplementary components

Figure A9:

Hex nut SW 19

Hex nut ES

Identifying mark of producer

Marking: Al = Aluminium
Optional: R = stainless steel

Table A1: Material of anchor parts

Anchor parts	Material
Cone bolt	Stainless steel, EN 10088 :2014
Expansion part	Stainless steel, EN 10088 :2014
Sleeve	Stainless steel, EN 10088 :2014
Carbonsleeve	Polyamide 6.6 CF
Hexagonal nut SW19	Aluminium, EN 755 :2016, Stainless steel, EN 10088 :2014
Hexagonal nut ES	Aluminium, EN 755 :2016, Stainless steel, EN 10088 :2014

Specifications of intended use

Anchorages subject to:

- Static and quasi-static loads.

Anchorage ground:

- Natural stone facade panels according to EN 1469:2015.
- The used material is free of crevices and mechanically effective cracks and alterations.
- Natural stone classified in accordance with Table B1.
- Characteristic values of the panels correspond to Annex B 3, Table B2.

Table B1: Stone groups for façade panels made of natural stone

Stone group		Natural stone type	Boundary conditions
I	High quality intrusive rocks (plutonic rocks)	Granite, granitite, tonalite, diorite, monzonite, gabbro, other magmatic plutonic rocks	None
II	Metamorphic rocks with „hard stone characteristics“	Quartzite, granulite, gneiss, migmatite, slate [2)]	None
III	High quality extrusive rocks (volcanic rocks)	Basalt and basaltic lava without harmful ingredients (like sun burner basalt)	Minimum density ρ: basalt: 2,7 kg/dm³ basaltic lava: 2,2 kg/dm³
IV	Sedimentary rocks with „hard stone characteristics“ [1)]	Sandstone, limestone and marble	Minimum density ρ: sandstone: 2.1 kg/dm³

1) For façade panels made of natural stones with planes of anisotropies, the difference between the flexural strength determined parallel to the planes of anisotropy and perpendicular to the edges of the planes of anisotropy shall not be more than 50 %.

2) Slate is only covered by EAD if the mean value of tensile bond strength is larger than 0,5 N/mm^2 and the minimum value of tensile bond strength is larger than 0,25 N/mm^2

Use conditions (Environmental conditions):

- In accordance with EN 1993-1-4:2015 dependent on Corrosion Resistancy Class (CRC) (ETA Section 3.1)

Design:

- The design of anchorages under static and quasistatic load is carried out in accordance with:
  EOTA Technical Report TR 062:2024 “Design of fasteners for façade panels made of natural stone“.
- The façade panels, their fixings as well as the substructure including its connection to wall brackets and their connection to the construction works are designed for the respective case of application under the responsibility of an engineer skilled in the field of façade construction.
- Verifiable calculation notes and drawings shall be prepared taking account of the loads to be anchored, the nature and strength of the base materials and the dimensions of the anchorage members as well as of the relevant tolerances. The position of the anchor is indicated on the design drawings.

Installation:

- The drillings are done at the factory or on site under workshop conditions; when drilling on site the execution is supervised by the responsible project supervisor or a skilled representative of the project supervisor.
- Making of the undercut drilling is done with a special drill bit or a special CNC drill bit according to Annex B 4 and a special drilling device in accordance with the information deposited with Deutsches Institut für Bautechnik.
- The drilling residues are removed from the drill hole.
- In case of aborted hole: new drilling at a minimum distance away of twice the depth of the aborted hole.
- The geometry of the drill hole is checked on 1 % of all drillings. The following dimensions shall be checked and documented according to manufacturer's information and testing instructions by means of a control aids according to Annex B 5, Figure B5, B6 and B7.
  - Diameter of the cylindrical drill hole.
  - Diameter of the undercut.
  - Remaining panel thickness (drill hole depth and panel thickness respectively).
- If the tolerance given in Annex B 4, Table B3 is exceeded, the geometry of the drill hole shall be checked on 25 % of the drillings performed. No further drill hole should exceed the tolerances otherwise all the drill holes have to be controlled. Drill holes falling below or exceeding the tolerances shall be rejected.

  Note: Checking the geometry of drill hole on 1 % of all drillings means that on one of 25 panels (this corresponds to 100 drillings for panels with 4 undercut anchors) one drilling shall be checked. If the tolerances given in Annex B 4, Table B3 are exceeded, the control shall be increased to 25 % of the drillings, i.e. one drilling shall be checked on all the 25 panels.
- The anchors are installed in a deformation controlled manner. For this purpose suitable installation tools per Annex B 5, Figure B4 shall be used. The anchor is set correctly if the bolt projection "b" in accordance to Annex A 2 (designation system) according to Annex B 6 Figure B10 and B11 is observed. For flush mounting, the sleeve must not project beyond the plate surface. Internal thread anchors are mounted flush or recessed according to Annex B 6. The dimension "b" is indicated in the anchor designation.
- During transport and storage on site the façade panels are protected from damages; the façade panels are not to be hung up jerkily (if need be lifters shall be used for hanging up the façade panels); façade panels and reveal panels respectively with incipient cracks are not be installed.
- The façade panels are arranged in a "reclined" or "upright" position.
- Overhead installation is allowed (e.g.: fastening cladding of ceilings)
- The façade are installed by skilled specialists and the laying instructions of the manufacturer shall be paid attention to.
- The façade panels must not be used for the transmission of scheduled impact loads and for the protection against falling.

Table B2: Characteristic values of façade panels made of nature stones

Façade panels				
Nominal panel thickness		h_{nom}	[mm]	20 (30) [1] $\leq h_{nom}$
Number of anchors (rectangular arrangement) [5]		N	[-]	≥ 4
Embedment depth [2]		h_s	[mm]	$12 \leq h_s \leq 38$
Minimum edge distance [3]		a_{rL} bzw. a_{rH}	[mm]	50
Minimum spacing [3]		a_L bzw. a_H	[mm]	8 h_s
Minimum residual panel thickness [4]		h_r	[mm]	≥ 8
Minimum characteristic flexural strength in accordance with EN 12372:2007				
Padang Cristallo G603, China	Stone group I	$\sigma_{5\%} \geq$	[N/mm²]	13,4
Jura Limestone (yellow), Germany	Stone group IV	$\sigma_{5\%} \geq$	[N/mm²]	12,4

1) For sandstone, limestone and basaltlava: panel thickness $h \geq 30$ mm, if the bending strength of the material $\sigma_{5\%} < 8$ N/mm².
2) $h_s = h_1 = h_v$ in 1 mm steps only (12, 13, 14 mm ... 38 mm) - tolerances see Annex B 4, Table B3, footnote 3)
3) For small fitting, differential or fill in pieces, the minimum edge distance or spacing shall be chosen constructively. In case of design under static loading using FEM, smaller edge distances and spacings are allowed.
4) Only for stand-off fixing. For h_r less than $0{,}85 \cdot h_1$, the permissible pressure load must be reduced in accordance with TR 062:2024.
5) In accordance with TR 062:2024 3.2.1, fewer anchor points are also possible.

Figure B1: Definition of edge distances and spacing

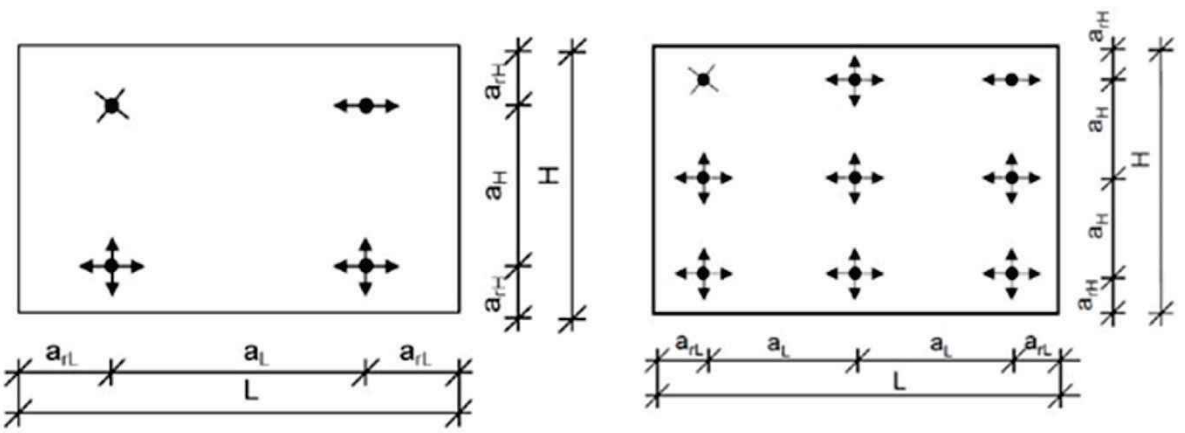

Legend:

a_{rL}, a_{rH} = edge distance – distance of an fastener to the panel edge
a_L, a_H = spacing – distance between fasteners
L = greater length of the façade panel
H = smaller length of the façade panel

= fixed point (fixed bearing)
= horizontal slide (loose bearing)
= horizontal and vertical slide (loose bearing)

Table B3: Drill hole dimensions

Drill hole						
Drill bit ∅ f [1]	∅ d_0 [mm] [2]	∅ d_1 [mm] [2]	FZPII	n	h_1 [mm] [2) 3)]	h_r [mm] [4]
FZPB 9	$11^{+0,4}_{-0,2}$	13,5 ±0,3	M6	≈ 4	$12 \leq h_1 \leq 38$	≥ 8
FZPB 11						
FZPB 11	$13^{+0,4}_{-0,2}$	15,5 ±0,3	M8 / M6i			
FZPB 13						
FZPB 13	$15^{+0,4}_{-0,2}$	17,5 ±0,3	M10 / M8i			
FZPB 15						

1) Drill bits for various drilling methods.

2) Dimensions can be checked with the appropriate control equipment in accordance with (Annex B 5).

3) Tolerances flush mounting: $h_1 = h_v {}^{+0,4}_{-0,1}$

4) Only for stand off fixing. For h_r less than 0,85 • h_1, the permissible pressure load must be reduced in accordance with TR 062:2024.

Figure B2: Drill bit example

Figure B3: Drill hole geometry

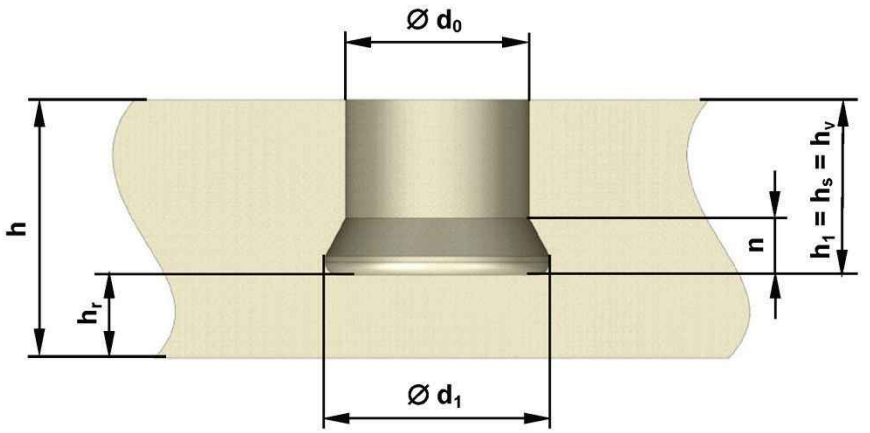

Setting tools

Figure B4:

Drive in tool
FZE

Cordless screwdriver
with setting tool e.g. SGA
or screw socket

Battery-setting tool SGB

Means for undercut control ∅ d_1

Figure B5:

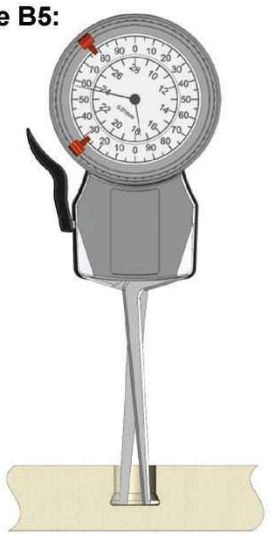

STU (Internal quicktest)

HVL (Undercut minimum volume gauge)

Go / no Go gauge for
checking cylindrical drill hole diameter ∅ d_0

Figure B6:

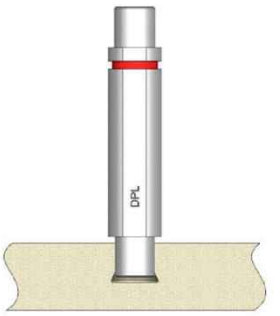

DPL (Diameter gauge)

Means for measuring borehole depth h_1 and borehole diameter d_0

Figure B7:

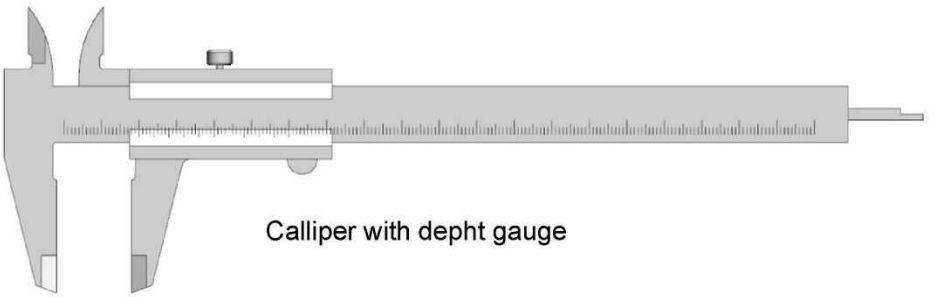

Calliper with depht gauge

fischer Zykon panel anchor FZP	**Annex B 5**
Intended use Setting devices and testing equipment	Appendix 10 / 13

Type of mounting and dimensional definition

Recessed fixing

Figure B8:

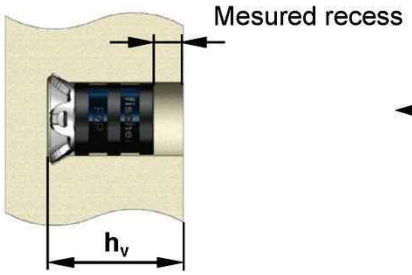

Example of an adaptation for stand off fixing

Figure B9:

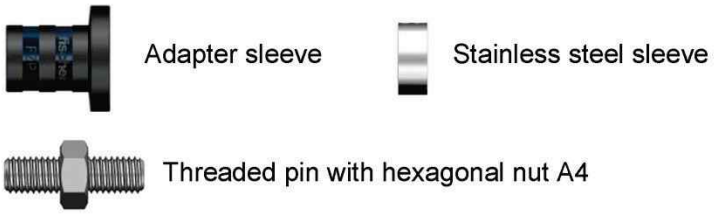

Flush fixing

Figure B10:

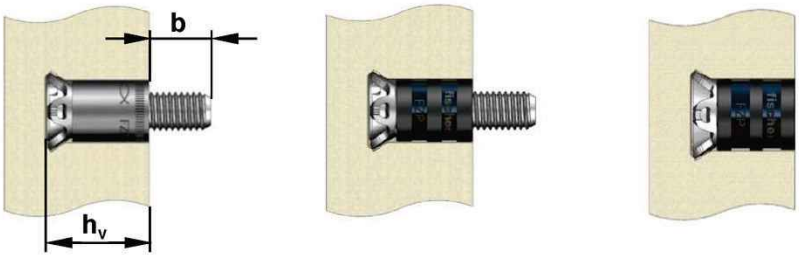

Stand off fixing

Figure B11:

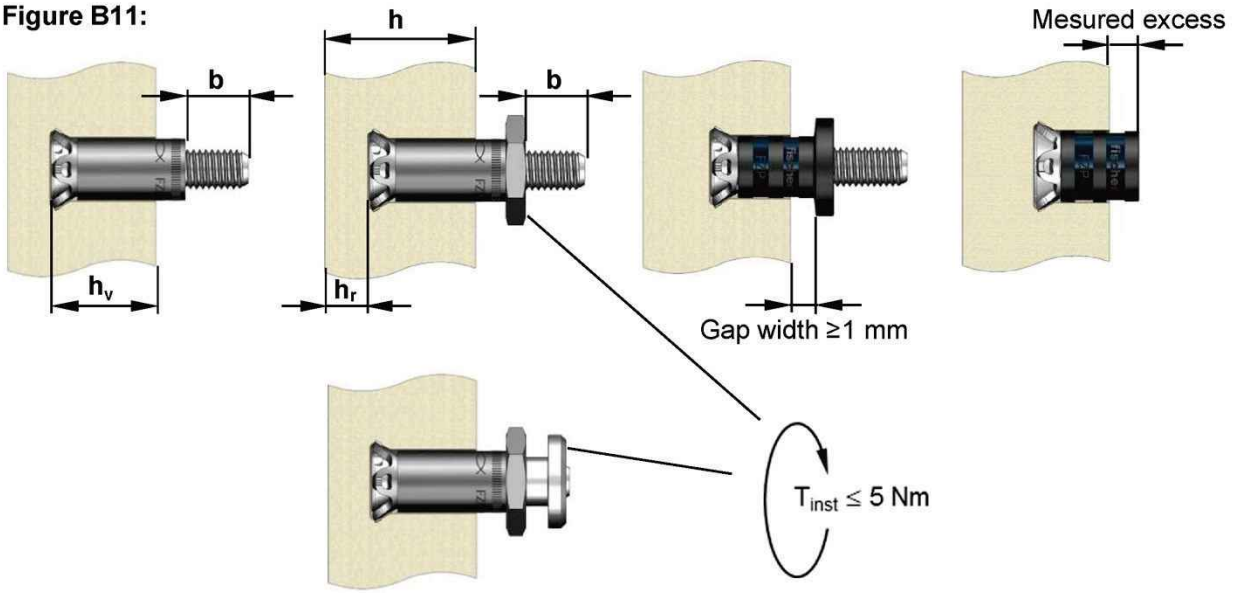

Istallation instructions

Example: Anchor installation with SGA

1.)

2.)

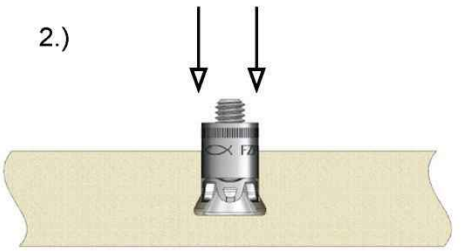

3.)

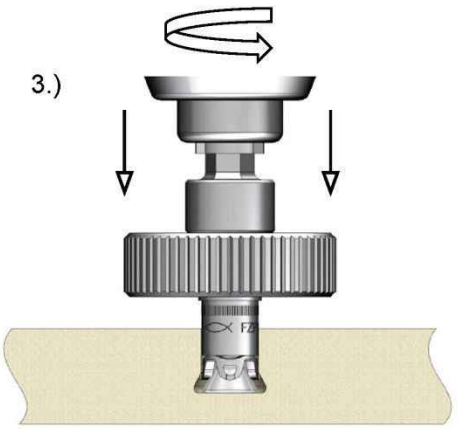

4.)

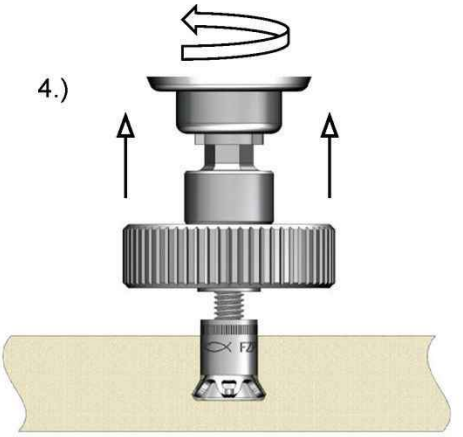

5.1)

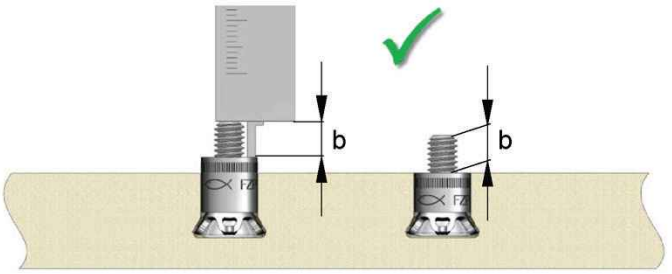

5.2)

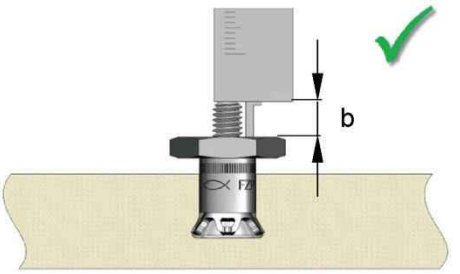

Table C1: Characteristic resistance

Diameter of drill hole	∅ d_0	[mm]	**11** (FZP M6)		**13** (FZP M8 / M6i)	
Designation of natural stone			Padang Cristallo G603	Jura Limestone (yellow)	Padang Cristallo G603	Jura Limestone (yellow)
Country of origin			China	Germany	China	Germany
Petrographic description			Granite	Limestone	Granite	Limestone
Panel thickness	h	[mm]	30	40	30	40
Edge distance	a_r	[mm]	100	100	100	100
Embedment depth	h_s	[mm]	15	17	17	25
Characteristic resistance						
Tension load	N_{Rk} 1)	[kN]	6,2	4,8	7,8	8,0
Shear load	V_{Rk} 1)	[kN]	7,8	7,9	7,0	9,1
Partial safety factor	γ_M	[-]	1,8			
Combined tension and shear load						
Trilinear limit value	X	[-]	1,2			

Stone group		I	II	III	IV
α_{TR}	[-]	1,0			

1) For other natural stones according to Table B1, the resistance is determined in accordance with Technical Report 062:2024 “Design of fasteners for façade panels made of natural stone“.

Table C2: Characteristic resistance for steel failure

Diameter of drill hole and Anchor	∅ d_0	[mm]	11 FZP M6	13 FZP M8	15 FZP M10	13 2) FZP M6i	15 2) FZP M8i
Characteristic resistance under tension load	$N_{Rk,s}$	[kN]	14,1	25,6	40,6	14,1	19,7
Partial safety factor	γ_{Ms} 1)	[-]	1,87				
Characteristic resistance under shear load	$V_{Rk,s}$	[kN]	7,0	12,8	20,3	7,0	9,8
Partial safety factor	γ_{Ms} 1)	[-]	1,56				
Cone bolt with UNC thread	UNC	[Inch]	FZP 1/4	FZP 5/16	FZP 3/8	FZP 1/4i	FZP 5/16i
Characteristic resistance under tension load	$N_{Rk,s}$	[kN]	14,3	23,6	35,0	13,0	20,3
Partial safety factor	γ_{Ms} 1)	[-]	1,87				
Characteristic resistance under shear load	$V_{Rk,s}$	[kN]	7,1	11,8	17,5	6,5	10,1
Partial safety factor	γ_{Ms} 1)	[-]	1,56				

1) In absence of national regulations
2) For the anchor with internal thread only a fixing screw of size M6, UNC1/4 or M8, UNC5/16 made of stainless steel 1.4401 or 1.4571 EN ISO 10088-3:2014 with a minimum strength class 70 in accordance with EN ISO 3506-1:2009 (fuk = 700 N/mm², fyk = 450 N/mm²) can be used. The screw-in depth of the fastening screw is at least 6 mm from the back of the panel.