# DECLARAȚIA DE PERFORMANȚĂ

## DoP 0234

pentru fischer TermoZ CS 8 / fischer TermoZ CS II 8 (Element de fixare din plastic pentru fixarea sistemelor compozite de izolare termică exterioară cu t RO

1. Cod unic de identificare al produsului-tip: **DoP 0234**

2. Utilizare (utilizări) preconizată (preconizate): **Ancoră din plastic înșurubată pentru fixarea sistemelor compozite de izolare termică exterioară cu tencuială în beton și zidărie.**
   **Consultați suplimentul, în special anexele B1- B4**

3. Fabricant: **fischerwerke GmbH & Co. KG, Klaus-Fischer-Str. 1, 72178 Waldachtal, Germany**

4. Reprezentant autorizat: **–**

5. Sistemul (sistemele) de evaluare și de verificare a constanței performanței: **2+**

6. Documentul de evaluare european: **EAD 330196-01-0604, Edition 07/2017**
   Evaluarea tehnică europeană: **ETA-14/0372; 2021-03-26**
   Organismul de evaluare tehnică: **ETA-Danmark A/S**
   Organism (organisme) notificat(e): **2873 TU Darmstadt**

7. Performanța (performanțe) declarată (declarate):
   **Siguranță în utilizare (BWR 4)**

| | | |
|---|---|---|
| Capacitate portantă caracteristică: | Rezistența caracteristică la întindere: | Anexele C1-C4 |
| | Distanța minimă față de margine: | Anexele B2-B3 |
| | Distanța minimă între ancore: | Anexele B2-B3 |
| Deplasări: | Sarcina de întindere cu factor de siguranță parțial: | Anexele C6, C7 |
| | Deplasări: | Anexele C6, C7 |
| Rigiditatea rozetei: | Diametrul rozetei: | Anexa C6 |
| | Capacitatea portantă a rozetei: | Anexa C6 |
| | Rigiditatea rozetei: | Anexa C6 |

**Economie de energie și retenție de căldură (BWR 6)**

| | | |
|---|---|---|
| Conductivitatea termică: | | |
| | Conductivitatea termică punctuală a unei ancore: | Anexele C5 |
| | Grosimea stratului de termoizolație: | Anexele C5 |

8. Documentație tehnică adecvată și/sau documentație tehnică specifică: –

Performanța produsului identificat mai sus este în conformitate cu setul de performanțe declarate. Această declarație de performanță este eliberată în conformitate cu Regulamentul (UE) nr. 305/2011, pe răspunderea exclusivă a fabricantului identificat mai sus.

Semnată pentru și în numele fabricantului de către:

Dr. Oliver Geibig, Director Executiv Departament Business & Inginerie

Jürgen Grün, Director Executiv Departament Chimic & Calitate

Tumlingen, 2021-04-05

Această declarație de performanță a fost întocmită în mai multe limbi. În cazul unei divergențe de interpretare, versiunea în limba engleză prevalează întotdeauna.

Suplimentul include informații voluntare și complementare în limba engleză, în afara cerințelor legale (specificate neutru din punct de vedere al limbii).

# II SPECIFIC PART OF THE EUROPEAN TECHNICAL ASSESSMENT

## 1 Technical description of product

**Technical description of the product**
The screwed-in anchor fischer TermoZ CS 8 and fischer TermoZ CS II 8 for fixing of external thermal insulation composite systems (ETICS) consists of an anchor sleeve made of polypropylene with a diameter of 8 mm and an insulation plate made of glass-fiber reinforced polyamide with a diameter of 60 mm. The color of the anchor sleeve is grey. The special compound screw is made of galvanized steel and glass-fiber reinforced polyamide. The anchor is expanded by screwing the screw into the sleeve. It is possible to install the anchor flush or deep-mounted to the surface of the insulation.

The product description is given in Annex A.

## 2 Specification of the intended use in accordance with the applicable European Assessment Document (hereinafter EAD)

The performances given in Section 3 are only valid if the anchor is used in compliance with the specifications and conditions given in Annex B1 to B3

The provisions made in this European Technical Assessment are based on an assumed intended working life of the anchor of 25 years.

The indications given on the working life cannot be interpreted as a guarantee given by the producer or Assessment Body, but are to be regarded only as a means for choosing the right products in relation to the expected economically reasonable working life of the works.

# 3 Performance of the product and references to the methods used for its assessment

## 3.1 Characteristics of product

**Safety in case of fire (BWR 2):**
No Performance determined

**Safety in use (BWR4):**
The essential characteristics are detailed in the Annex from C1 to C4.

Other Basic Requirements are not relevant.

**General aspects**
The verification of durability is part of testing of the essential characteristics. Durability is only ensured if the specifications of intended use according to Annex B are taken into account.

## 3.2 Methods of assessment

The assessment of fitness of the anchor for the intended use in relation to the requirements for mechanical resistance and stability and safety in use in the sense of the Basic Requirements 4 has been made in accordance with the EAD 330196-01-0604 Plastic anchors made of virgin or non-virgin material for fixing of external thermal insulation composite systems with rendering.

# 4 Assessment and verification of constancy of performance (AVCP)

## 4.1 AVCP system

According to the decision 97/463/EC of the European Commission, the system(s) of assessment and verification of constancy of performance (see Annex V to Regulation (EU) No 305/2011) is 2+.

**TermoZ CS 8 / 95-115**

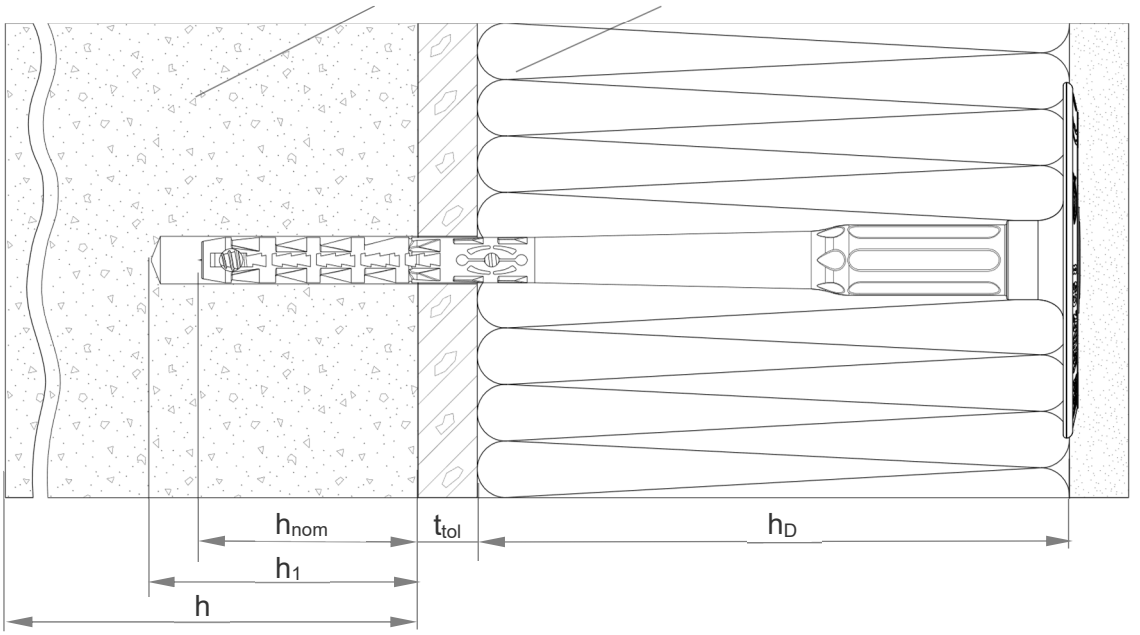


Mounting on the surface

**TermoZ CS II 8 / 135-255**

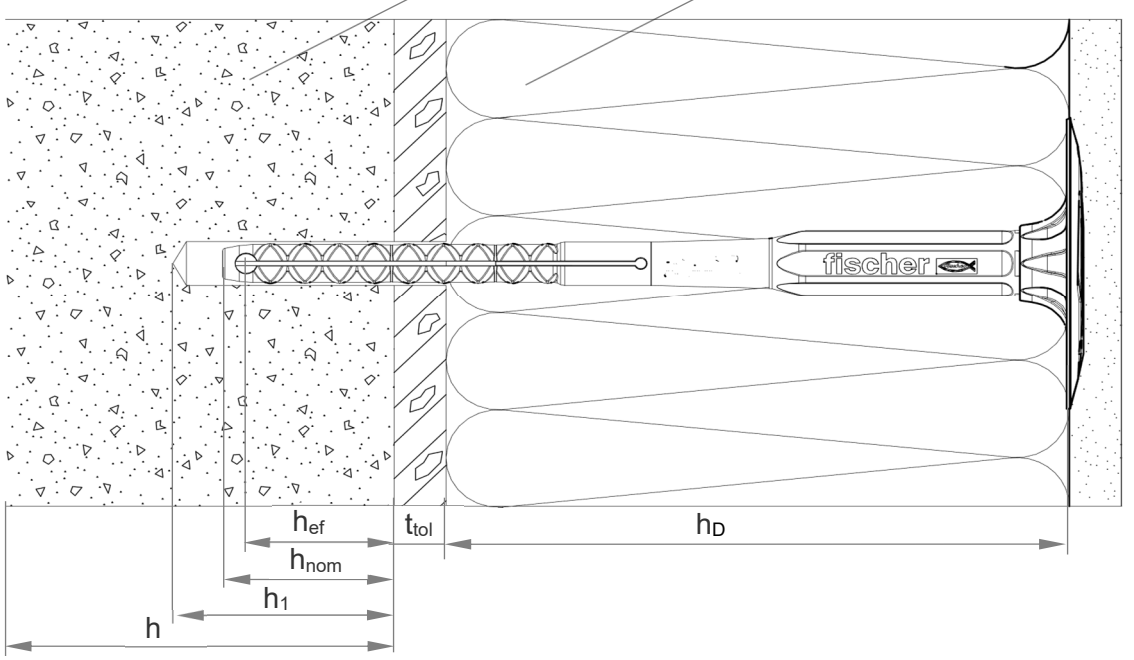


**Legend**

| | | |
|---|---|---|
| $h_{nom}$ | = | Overall plastic anchor embedment depth in the base material |
| $h_{ef}$ | = | Effective anchorage depth in the base material |
| $h_1$ | = | Depth of drilled hole to deepest point |
| h | = | Thickness of member (wall) |
| $h_D$ | = | Thickness of insulation material |
| $t_{tol}$ | = | Thickness of equalising layer or non–load bearing coating |

Figure not to scale

| | |
|---|---|
| **fischer TermoZ CS 8 and fischer TermoZ CS II 8** | **Annex A1** |
| Product description - Installed anchor | of European Technical Assessment ETA-14/0372 |

**TermoZ CS 8 / 275-375**

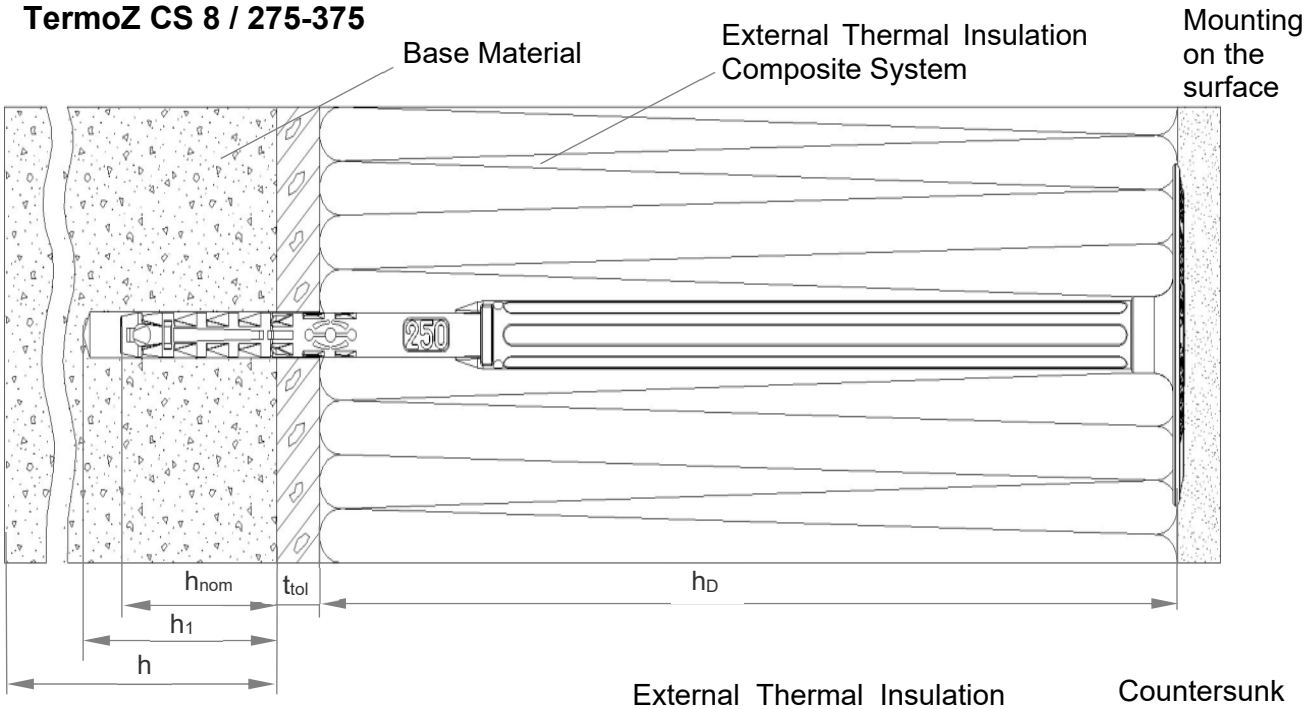


**TermoZ CS 8 / 115**

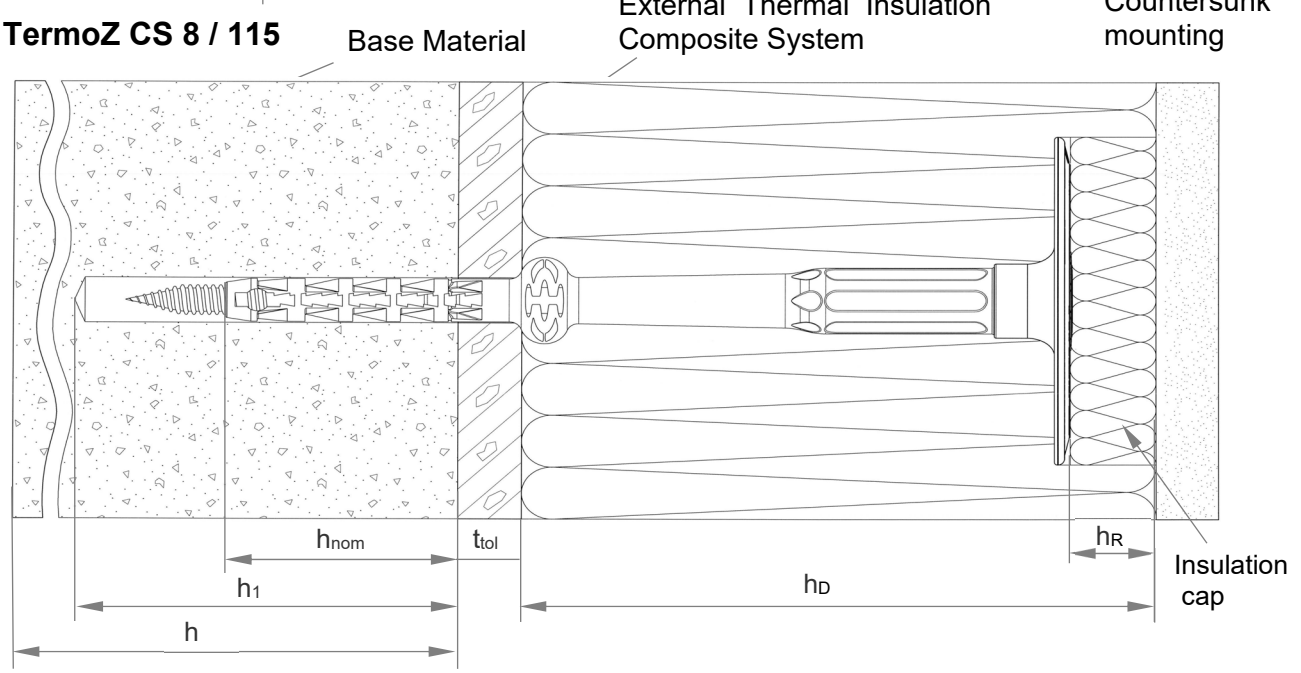


**Legend**

| | | |
|---|---|---|
| $h_{nom}$ | = | Overall plastic anchor embedment depth in the base material |
| $h_1$ | = | Depth of drilled hole to deepest point |
| h | = | Thickness of member (wall) |
| $h_D$ | = | Thickness of insulation material |
| $t_{tol}$ | = | Thickness of equalising layer or non–load bearing coating |
| $h_R$ | = | Thickness of insulation cap |

Figure not to scale

| | |
|---|---|
| **fischer TermoZ CS 8 and fischer TermoZ CS II 8** | **Annex A2** of European Technical Assessment ETA-14/0372 |
| Product description - Installed anchor | |

## TermoZ CS II 8 / 135-255

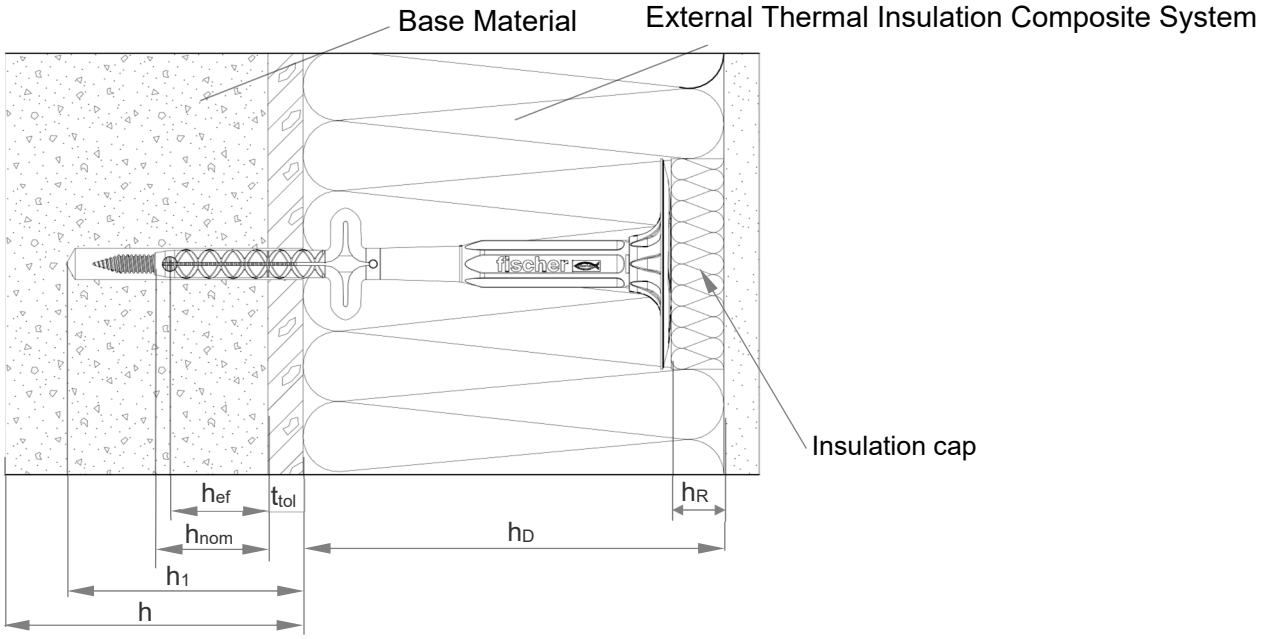


## TermoZ CS 8 / 275-375

contersunk mounting

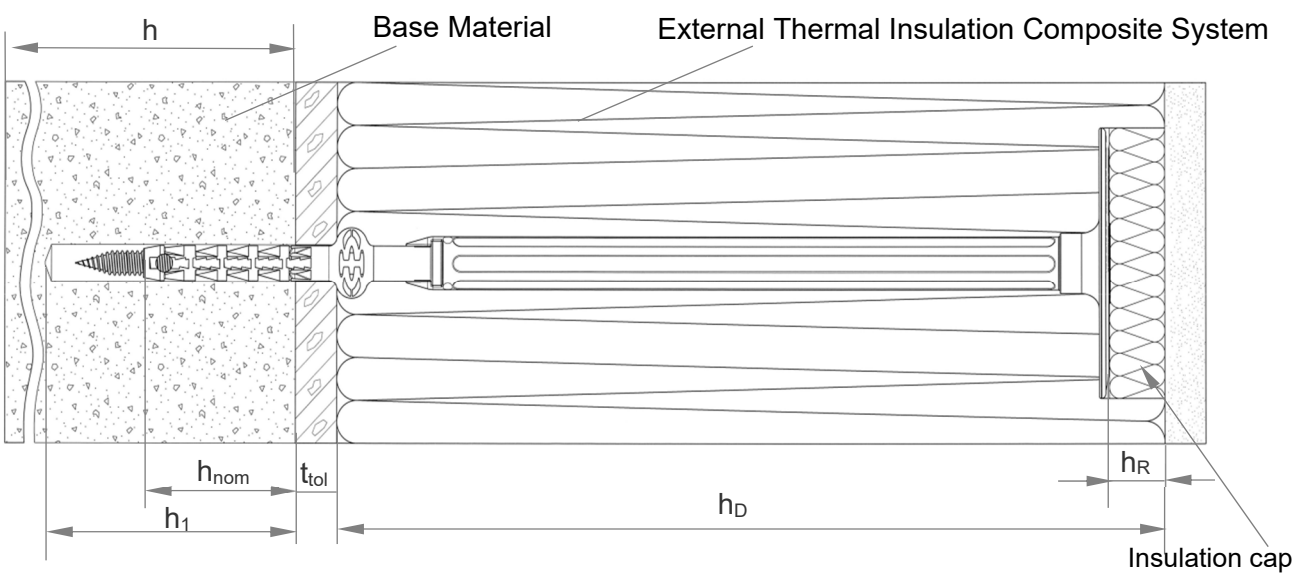


**Legend**

| | | |
|---|---|---|
| $h_{nom}$ | = | Overall plastic anchor embedment depth in the base material |
| $h_{ef}$ | = | Effective anchorage depth in the base material |
| $h_1$ | = | Depth of drilled hole to deepest point |
| $h$ | = | Thickness of member (wall) |
| $h_D$ | = | Thickness of insulation material |
| $t_{tol}$ | = | Thickness of equalising layer or non–load bearing coating |
| $h_R$ | = | Thickness of insulation cap |

Figure not to scale

| | |
|---|---|
| **fischer TermoZ CS 8 and fischer TermoZ CS II 8** | **Annex A3** |
| Product description - Installed anchor | of European Technical Assessment ETA-14/0372 |

## TermoZ CS 8 / 115 DT 110 V

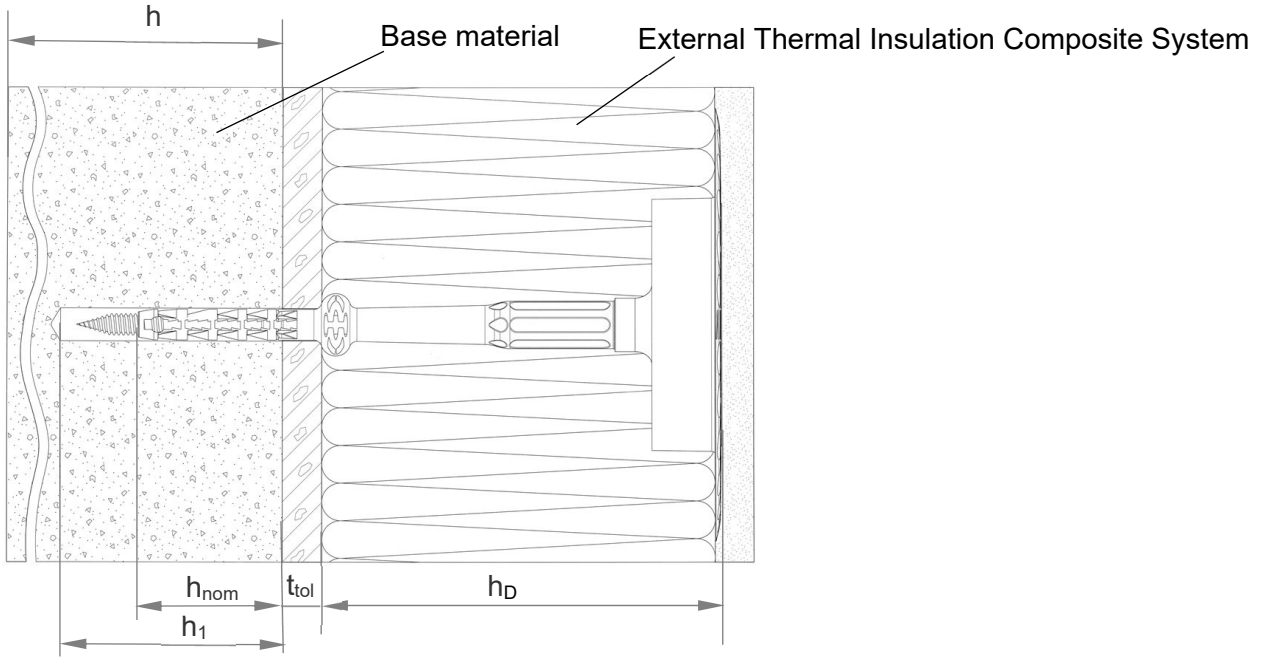


## TermoZ CS II 8 / 135-255 DT 110 V

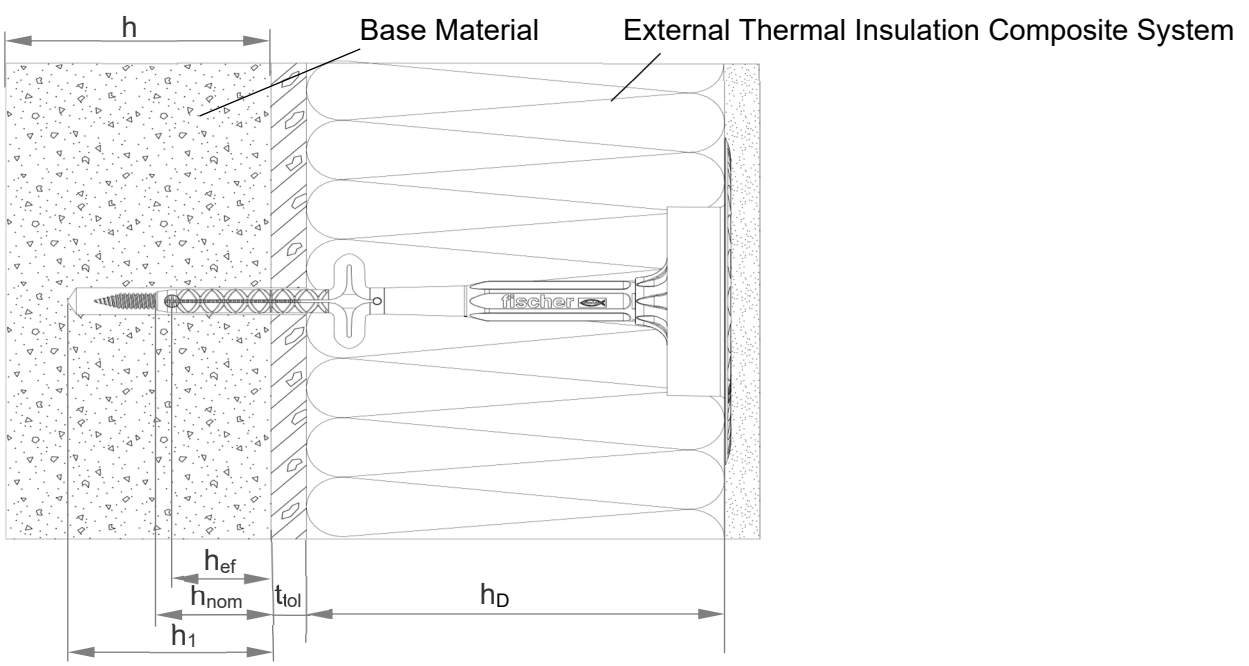


**Legend**

| | | |
|---|---|---|
| $h_{nom}$ | = | Overall plastic anchor embedment depth in the base material |
| $h_{ef}$ | = | Effective anchorage depth in the base material |
| $h_1$ | = | Depth of drilled hole to deepest point |
| h | = | Thickness of member (wall) |
| $h_D$ | = | Thickness of insulation material |
| $t_{tol}$ | = | Thickness of equalising layer or non–load bearing coating |

Figure not to scale

| | |
|---|---|
| **fischer TermoZ CS 8 and fischer TermoZ CS II 8** | **Annex A4** |
| Product description - Installed anchor | of European Technical Assessment ETA-14/0372 |

## TermoZ CS 8 / 250-390 DT 110 V

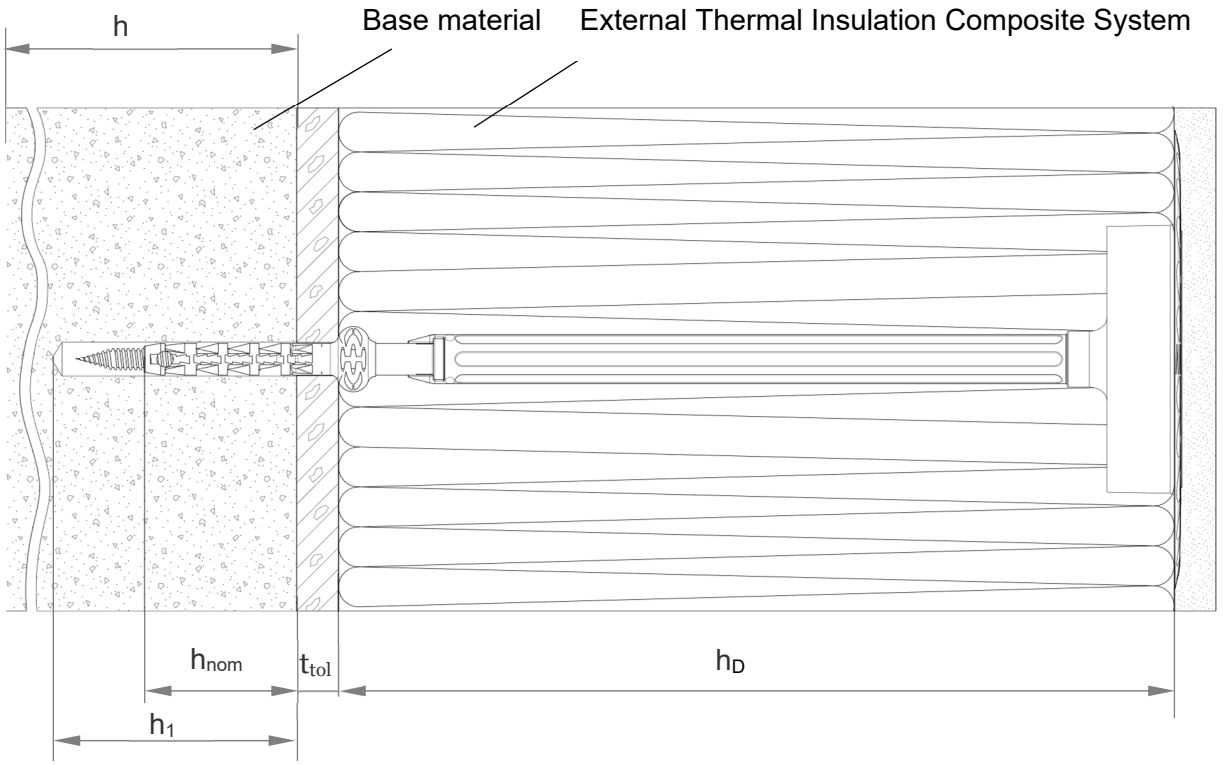


**Legend**

| | | |
|---|---|---|
| $h_{nom}$ | = | Overall plastic anchor embedment depth in the base material |
| $h_1$ | = | Depth of drilled hole to deepest point |
| h | = | Thickness of member (wall) |
| $h_D$ | = | Thickness of insulation material |
| $t_{tol}$ | = | Thickness of equalising layer or non–load bearing coating |

Figure not to scale

| | |
|---|---|
| **fischer TermoZ CS 8 and fischer TermoZ CS II 8** | **Annex A5** |
| Product description - Installed anchor | of European Technical Assessment ETA-14/0372 |

## Anchor sleeve / Specific screw for TermoZ CS 8 / 95-115

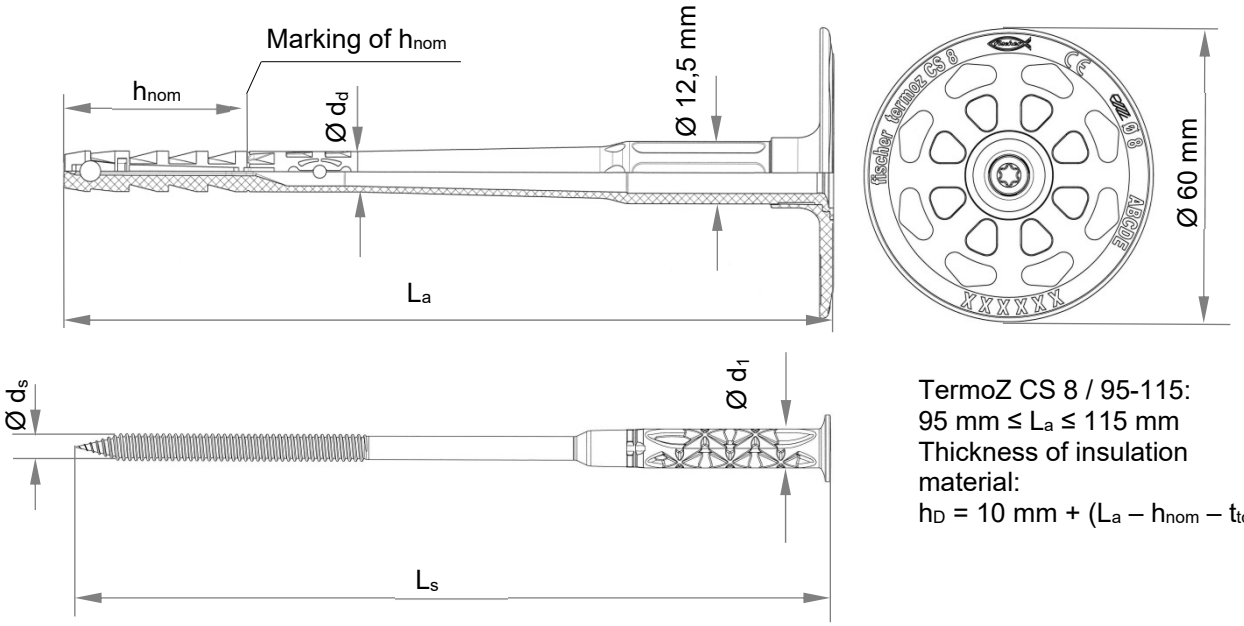


TermoZ CS 8 / 95-115:
95 mm ≤ $L_a$ ≤ 115 mm
Thickness of insulation material:
$h_D$ = 10 mm + ($L_a$ – $h_{nom}$ – $t_{tol}$)

## Anchor sleeve / Specific screw for TermoZ CS II 8 / 135-255

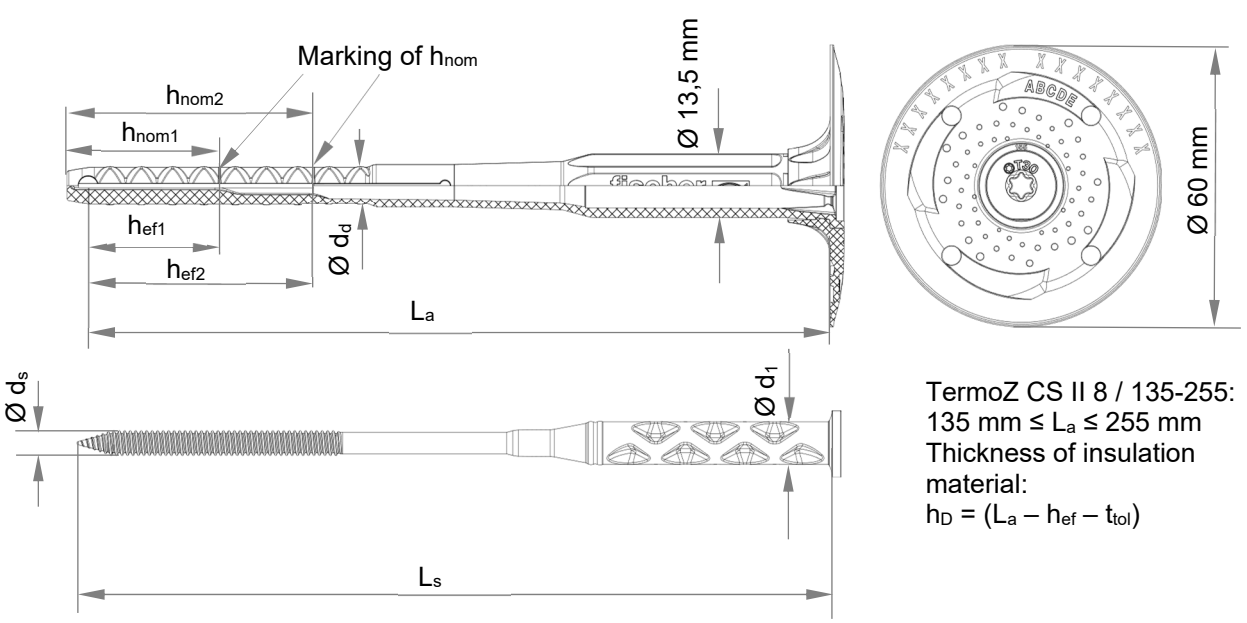


TermoZ CS II 8 / 135-255:
135 mm ≤ $L_a$ ≤ 255 mm
Thickness of insulation material:
$h_D$ = ($L_a$ – $h_{ef}$ – $t_{tol}$)

Figure not to scale

| | |
|---|---|
| **fischer TermoZ CS 8 and fischer TermoZ CS II 8** | **Annex A6** |
| Product description - Dimensions | of European Technical Assessment ETA-14/0372 |

**Setting tool with SDS adapter or hexagonal adapter available for TermoZ CS 8 / 95-115 and TermoZ CS II 8 / 135-255**

**Optional: plain surface setting**

**Countersunk setting of anchor**

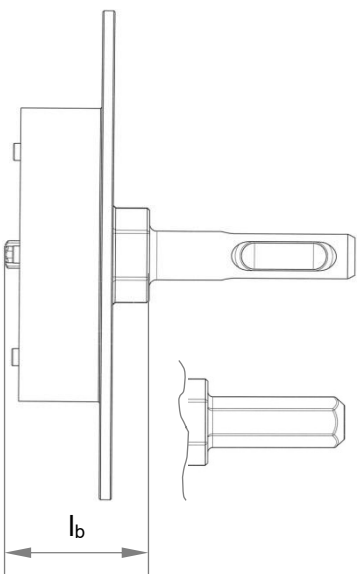


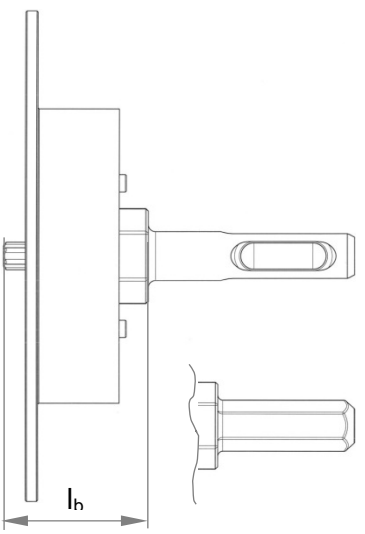


**Polystyrene or mineral wool caps**

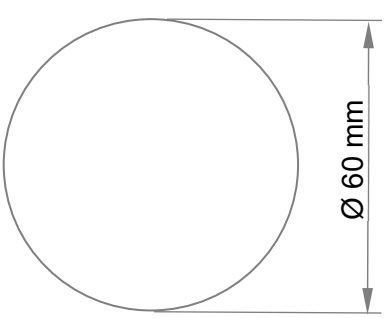


Figure not to scale

| | |
|---|---|
| **fischer TermoZ CS 8 and fischer TermoZ CS II 8** | **Annex A7** |
| Product description - Dimensions | of European Technical Assessment ETA-14/0372 |

## Shaft / Anchor sleeve / Specific screw for TermoZ CS 8 / 275-375

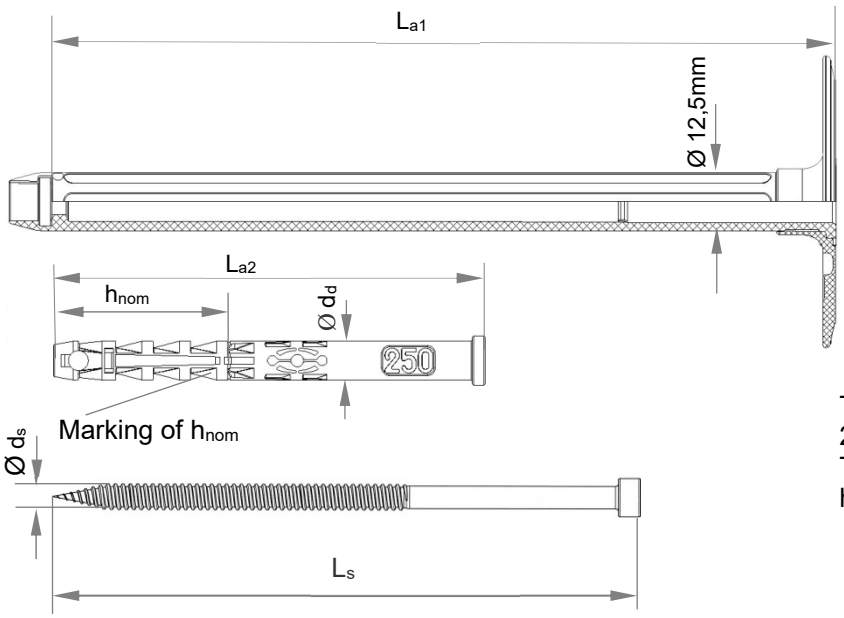


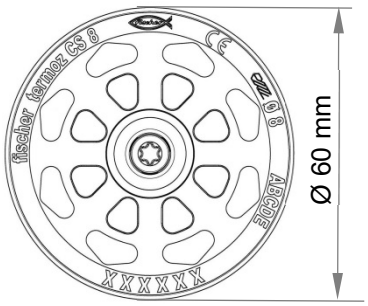


TermoZ CS 8 / 275-375:
275mm ≤ $L_a$ ≤ 375 mm
Thickness of insulation material:
$h_D = 10mm + (L_{a1} + L_{a2}) - h_{nom} - t_{tol}$

## Setting tool with SDS adapter or hexagonal adapter available

**Countersunk setting of anchor**

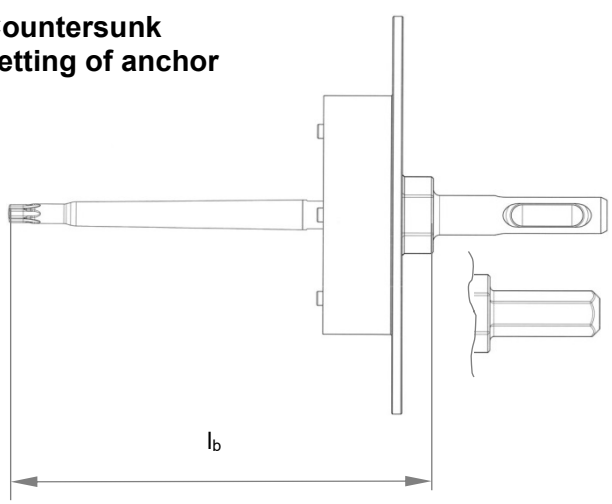


**Optional: plain surface setting**

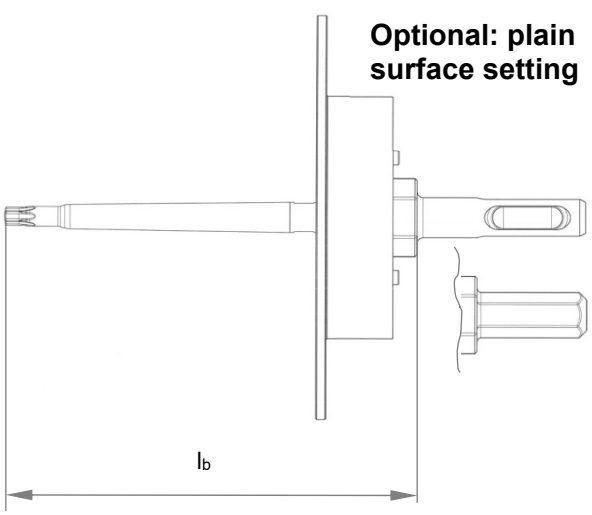


**Polystyrene or mineral wool caps**

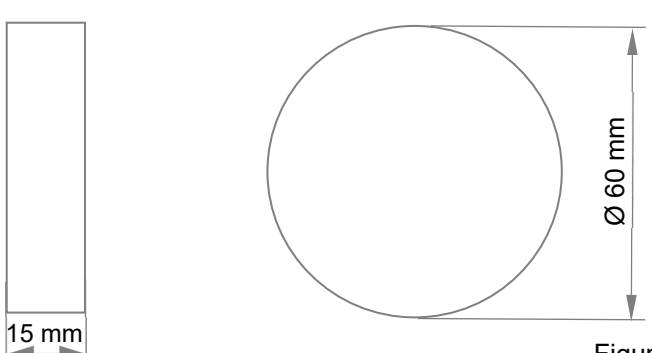


Figure not to scale

| fischer TermoZ CS 8 and fischer TermoZ CS II 8 | **Annex A8** |
|---|---|
| Product description - Dimensions | of European Technical Assessment ETA-14/0372 |

## TermoZ CS 8 / 115 DT 110 V

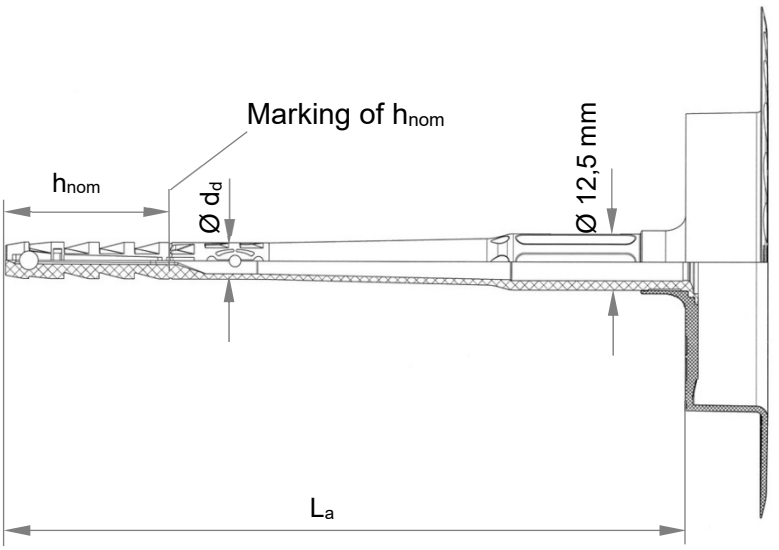


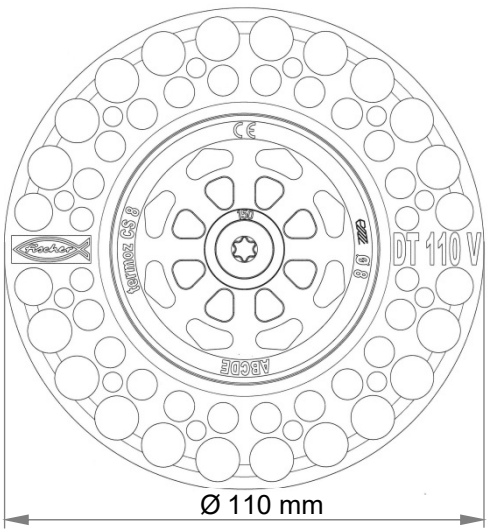


TermoZ CS 8 / 95-115:
95 mm ≤ $L_a$ ≤ 115 mm
Thickness of insulation material:
$h_D$ = 10 mm + ($L_a$ – $h_{nom}$ – $t_{tol}$)

## TermoZ CS II 8 / 135-255 DT 110

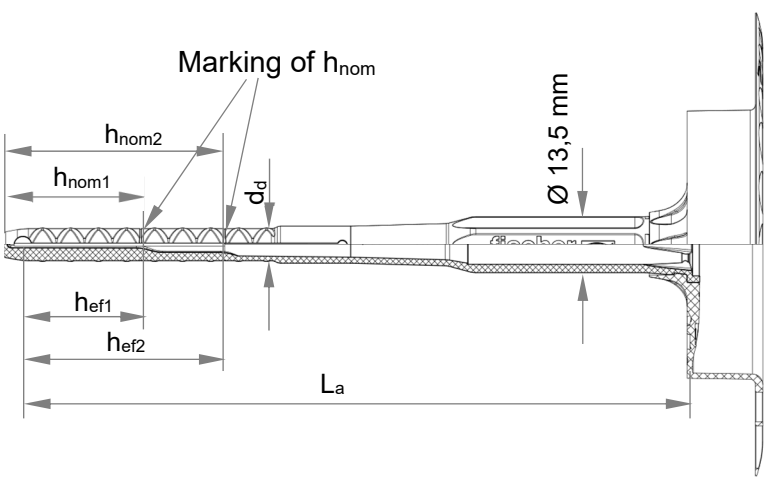


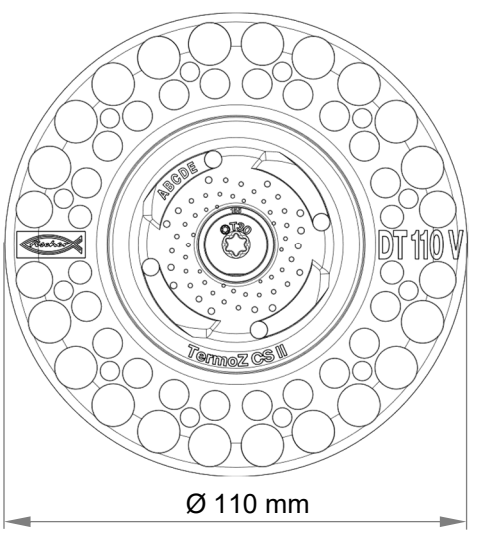


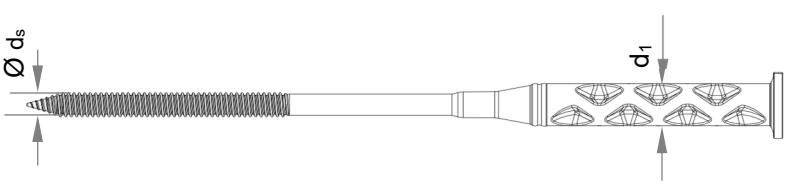


TermoZ CS II 8 / 135-255:
135 mm ≤ $L_a$ ≤ 255 mm
Thickness of insulation material:
$h_D$ = ($L_a$ – $h_{ef}$ – $t_{tol}$)

Figure not to scale

| | |
|---|---|
| **fischer TermoZ CS 8 and fischer TermoZ CS II 8** | **Annex A9** |
| Product description - Dimensions | of European Technical Assessment ETA-14/0372 |

## TermoZ CS 8 / 115 DT 110 V and TermoZ CS II 8 / 135-255 DT 110 V

**Countersunk Setting tool with SDS adapter or hexagonal adapter available**

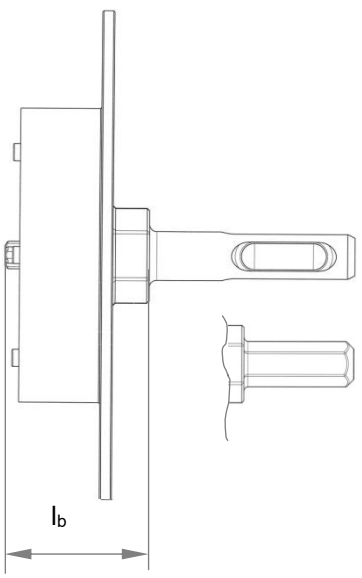


**Polystyrene or mineral wool caps**

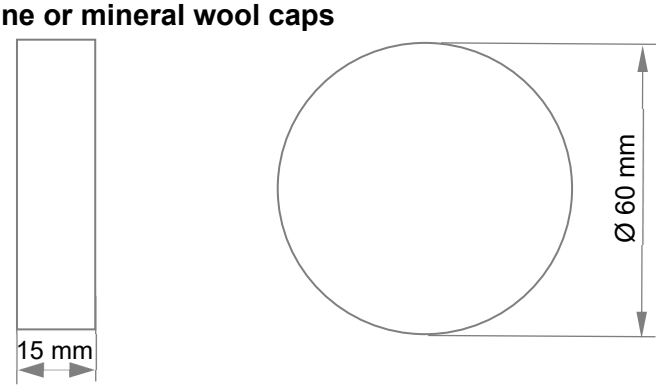


Figure not to scale

| | |
|---|---|
| **fischer TermoZ CS 8 and fischer TermoZ CS II 8** | **Annex A10** |
| Product description - Dimensions | of European Technical Assessment ETA-14/0372 |

## TermoZ CS 8 / 275-375 DT 110 V

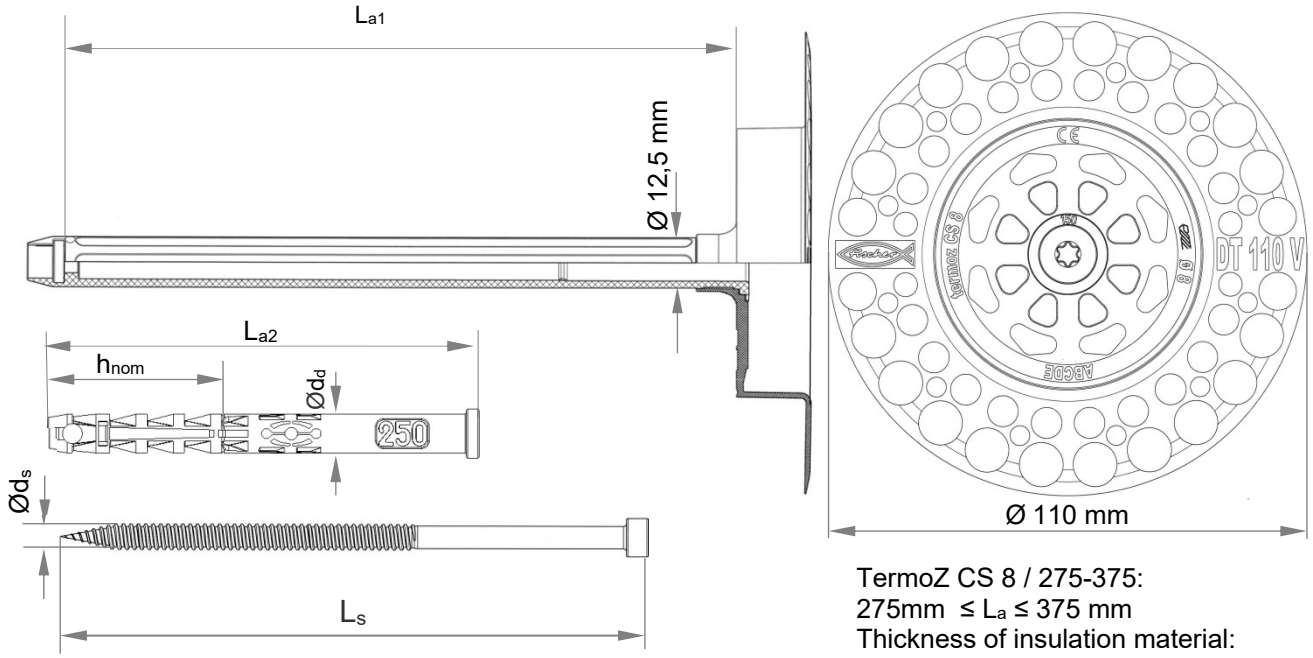


TermoZ CS 8 / 275-375:
275mm ≤ $L_a$ ≤ 375 mm
Thickness of insulation material:
$h_D = 10mm + (L_{a1} + L_{a2}) - h_{nom} - t_{tol}$

**Countersunk Setting tool with SDS adapter or hexagonal adapter available**

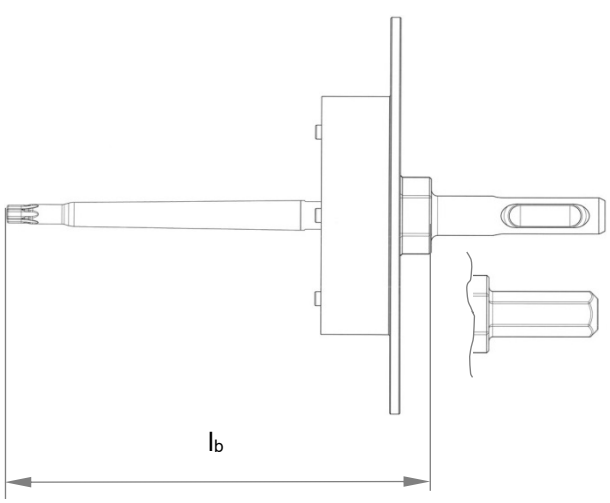


**Polystyrene or mineral wool caps**

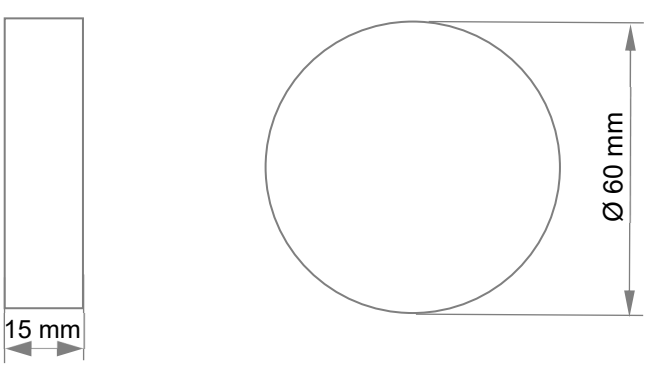


Figure not to scale

| | |
|---|---|
| **fischer TermoZ CS 8 and fischer TermoZ CS II 8** | **Annex A11** |
| Product description - Dimensions | of European Technical Assessment ETA-14/0372 |

**Table A12.1: Slip-on plates, diameters and material**

| | Designation |
|---|---|
| Name and size of anchor | TermoZ CS 8 / TermoZ CS II 8 |
| Example | fischer TermoZ CS 8 (optional) CE (optional) Ø 8 ABCDE (optional) and xxxxx additional marks possible<br>fischer TermoZ CS II 8 (optional) CE (optional) Ø 8 ABCDE (optional) and xxxxx additional marks possible |

**Table A12.2: Dimensions [mm]**

| Anchor type | Anchor sleeve | | | Shaft | | Specific screw | | | Length of bits $l_b$ | |
|---|---|---|---|---|---|---|---|---|---|---|
| | Ø $d_d$ | $h_{nom}$ | $h_{ef}$ | $L_a$ | ($L_{a1}$+$L_{a2}$) | Ø $d_s$ | $l_s$ | Ø $d_1$ | $l_b$ [mm] | size |
| TermoZ CS 8<br>95-115 | 8 | 35 | - | 95-115 | - | 5,4 | $L_a$ + 10 mm | 8 | 30 | T30 |
| TermoZ CS II 8<br>135-255 | 8 | 32,5<br>52,5 | 25<br>45 | 135-255 | - | 5,4 | $L_a$ + 10 mm | 9,5 | 30 | T30 |
| TermoZ CS 8<br>Renovation type<br>275-295 | 8 | 35 | - | - | 275-295 | 5,4 | ($L_{a1}$ + $L_{a2}$) – 60 mm | - | 100 | T25 |
| TermoZ CS 8<br>315-375 | 8 | 35 | - | - | 315-375 | 5,4 | ($L_{a1}$ + $L_{a2}$) – 140 mm | - | 180 | T25 |

**Table A12.3: Dimensions [mm]**

| Anchor type | Anchor sleeve | | | Shaft | | Specific screw | | | Length of bits $l_b$ | |
|---|---|---|---|---|---|---|---|---|---|---|
| | Ø $d_d$ | $h_{nom}$ | $h_{ef}$ | $L_a$ | ($L_{a1}$+$L_{a2}$) | Ø $d_s$ | $l_s$ | Ø $d_1$ | $l_b$ [mm] | size |
| TermoZ CS 8<br>115 DT 110 V | 8 | 35 | - | 115 | - | 5,4 | $L_a$ + 10 mm | 8 | 30 | T30 |
| TermoZ CS II 8<br>135-255 DT110 V | 8 | 32,5<br>52,5 | 25<br>45 | 135-255 | - | 5,4 | $L_a$ + 10 mm | 9,5 | 30 | T30 |
| TermoZ CS 8<br>Renovation type<br>275-295 DT110 V | 8 | 35 | - | - | 275-295 | 5,4 | ($L_{a1}$ + $L_{a2}$) – 60 mm | - | 100 | T25 |
| TermoZ CS 8<br>315-375 DT 110 V | 8 | 35 | - | - | 315-375 | 5,4 | ($L_{a1}$ + $L_{a2}$) – 140 mm | - | 180 | T25 |

**Table A13.1: Materials**

| Designation | Material |
|---|---|
| Anchor sleeve | PP colour: grey |
| Shaft (TermoZ CS 8 / 275-375) | PA6 GF colour: grey |
| Specific compound screw (TermoZ CS 8 95-115)<br>or<br>specific screw (TermoZ CS 8 / 275-375)<br>or<br>specific compound screw (TermoZ CS II 8 135-255) | PA6 GF with Steel gal Zn A2G or A2F acc. to EN ISO 4042:2018-11<br>Steel gal Zn5-Ag or Zn5-An acc. to EN ISO 4042:2018-11<br>or stainless steel 1.4362 duplex coating, 1.4401, 1.4571, 1.4529 acc. to EN 10088:2014-12 |
| Anchor plate | PA6 GF colour: grey, blue, green, orange, red, yellow, mocca-latte |

**Drawing of the slip-on plates (e.g. DT 140)**

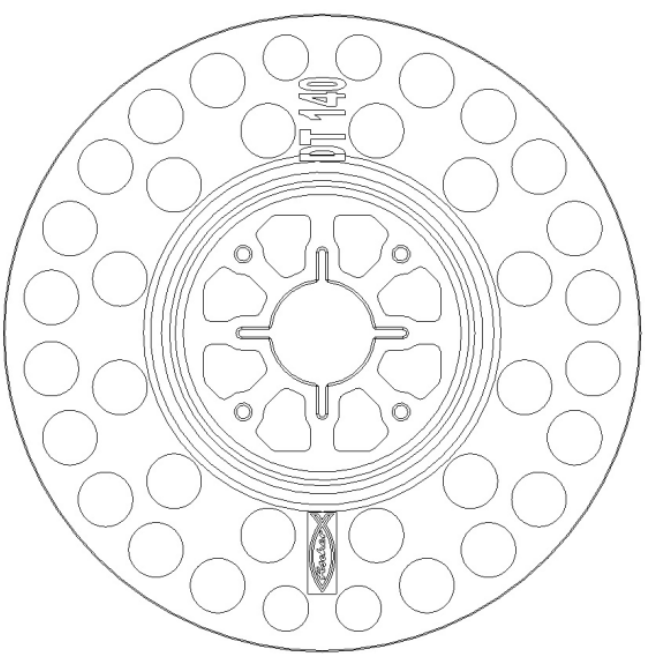


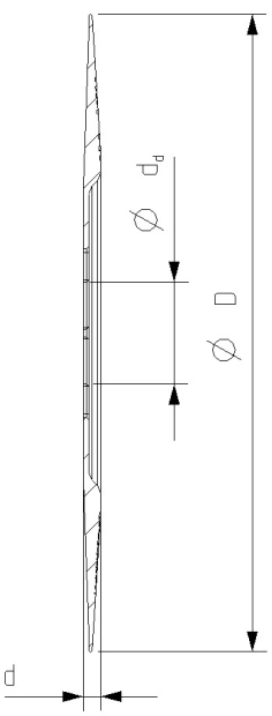


**Table A13.2: Slip-on plates, diameters and material**

| Slip-on plate | Ø D [mm] | Ø $d_d$ [mm] | d [mm] | Materia |
|---|---|---|---|---|
| DT 90 / DT 110 / DT 140 | 90 / 110 / 140 | 22,5 | 3,9 | PA 6 GF |

## Specifications of intended use

**Anchorages subject to:**

- The anchor may only be used for transmission of wind suction loads and shall not be used for the transmission of dead loads of the thermal insulation composite system.

**Base materials:**

- Normal weight concrete (base material group A) according to Annex C1 and C3.
- Solid masonry (base material group B), according to Annex C1 and C3.
- Hollow or perforated masonry (base material group C), according to Annex C1, C2, C3 and C4.
- Lightweight aggregate concrete (base material group D), according to Annex C2 and C4.
- Autoclaved aerated concrete (base material group E), according to Annex C2 and C4.
- For other base materials of the base material groups A, B, C, D and E the characteristic resistance of the anchor may be determined by job site tests according to EOTA Technical Report TR 051 Edition April 2018.

**Temperature Range:**

- 0°C to +40°C (max. short term temperature +40°C and max. long term temperature +24°C) of the base material

**Design:**

- The anchorages are designed under the responsibility of an engineer experienced in anchorages and masonry work with the partial safety factors $g_M$ = 2,0 and $g_F$ = 1,5 if there are no other national regulations.
- Verifiable calculation notes and drawings are prepared taking account of the loads to be anchored. The position of the anchors is indicated on the design drawings.
- Fasteners are only to be used for multiple fixings of thermal insulation composite systems.

**Installation:**

- Drilling method according to Annex C1 to C4.
- Anchor installation carried out by appropriately qualified personnel and under the supervision of the person responsible for technical matters on the site.
- Installation temperature from 0°C to +40°C
- Exposure to UV due to solar radiation of the anchor not protected by rendering ≤ 6 weeks.

**Table B2.1: Installation parameters for base material groups A, B, C and D**

| Anchor type | | | | TermoZ CS 8/95-115 and 275-375 | |
|---|---|---|---|---|---|
| | | | | Flush | Countersunk |
| Nominal drill hole diameter | $d_0$ | = | [mm] | **8** | **8** |
| Cutting diameter of drill bit | $d_{cut}$ | ≤ | [mm] | **8,45** | **8,45** |
| Depth of drill hole to deepest point | $h_1$ | ≥ | [mm] | **45 / 55[1)]** | **60 / 70[1)]** |
| Overall plastic anchor embedment depth in the base material | $h_{nom}$ | ≥ | [mm] | **35 / 45[1)]** | **35 / 45[1)]** |

[1)] only valid for weather shell acc. to Annex C1

**Table B2.2: Installation parameters for base material group "C" only valid for the tested masonry units**

| Anchor type | | | | TermoZ CS 8/95-115 and 275-375 | |
|---|---|---|---|---|---|
| | | | | Flush | Countersunk |
| Nominal drill hole diameter | $d_0$ | = | [mm] | **8** | **8** |
| Cutting diameter of drill bit | $d_{cut}$ | ≤ | [mm] | **8,45** | **8,45** |
| Depth of drill hole to deepest point | $h_1$ | ≥ | [mm] | **35** | **50** |
| Overall plastic anchor embedment depth in the base material | $h_{nom}$ | ≥ | [mm] | **25** | **25** |

**Table B2.3: Installation parameters for base material group "E"**

| Anchor type | | | | TermoZ CS 8/95-115 and 275-375 | |
|---|---|---|---|---|---|
| | | | | Flush | Countersunk |
| Nominal drill hole diameter | $d_0$ | = | [mm] | **8** | **8** |
| Cutting diameter of drill bit | $d_{cut}$ | ≤ | [mm] | **8,45** | **8,45** |
| Depth of drill hole to deepest point | $h_1$ | ≥ | [mm] | **65** | **80** |
| Overall plastic anchor embedment depth in the base material | $h_{nom1}$ | ≥ | [mm] | **65** | **80** |
| Depth of drill hole to deepest point | $h_2$ | ≥ | [mm] | **35** | **35** |
| Overall plastic anchor embedment depth in the base material | $h_{nom2}$ | ≥ | [mm] | **55** | **55** |

**Table B2.4: Anchor distances and dimensions of members**

| Anchor type | | | | TermoZ CS 8/95-115 and 275-375 |
|---|---|---|---|---|
| Minimum thickness of member | $h^{1)}$ | ≥ | [mm] | **100** |
| Minimum spacing | $s_{min}$ | = | [mm] | **100** |
| Minimum edge distance | $c_{min}$ | = | [mm] | **100** |

1) not valid for weather shells acc. to Annex C1

**Scheme of distances and spacing**

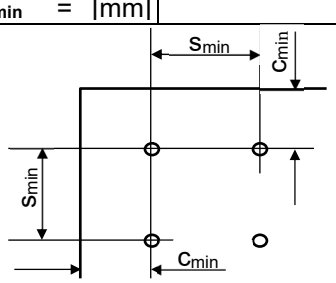


| | |
|---|---|
| **fischer TermoZ CS 8 and fischer TermoZ CS II 8** | **Annex B2** of European Technical Assessment ETA-14/0372 |
| Installation parameters for use categories | |

**Table B3.1: Installation parameters for base material groups A, B, C, D and E**

| Anchor type | | | | TermoZ CS II 8/135-255 | |
|---|---|---|---|---|---|
| | | | | Flush | Countersunk |
| Nominal drill hole diameter | $d_0$ | = | [mm] | **8** | **8** |
| Cutting diameter of drill bit | $d_{cut}$ | ≤ | [mm] | **8,45** | **8,45** |
| Depth of drill hole to deepest point | $h_1$ | ≥ | [mm] | **40** | **55** |
| Overall plastic anchor embedment depth in the base material | $h_{nom}$ | ≥ | [mm] | **32,5** | **32,5** |
| Effective plastic anchorage depth | $h_{ef}$ | ≥ | [mm] | **25** | **25** |

**Table B3.2: Installation parameters alternative option for base material group "E" for higher loads**

| Anchor type | | | | TermoZ CS II 8/135-255 | |
|---|---|---|---|---|---|
| | | | | Flush | Countersunk |
| Nominal drill hole diameter | $d_0$ | = | [mm] | **8** | **8** |
| Cutting diameter of drill bit | $d_{cut}$ | ≤ | [mm] | **8,45** | **8,45** |
| Depth of drill hole to deepest point | $h_1$ | ≥ | [mm] | **60** | **75** |
| Overall plastic anchor embedment depth in the base material | $h_{nom}$ | ≥ | [mm] | **52,5** | **52,5** |
| Effective plastic anchorage depth | $h_{ef}$ | ≥ | [mm] | **45** | **45** |

**Table B3.3: Anchor distances and dimensions of members**

| Anchor type | | | | TermoZ CS II 8/135-255 |
|---|---|---|---|---|
| Minimum thickness of member | $h$ | ≥ | [mm] | **100** |
| Minimum spacing | $s_{min}$ | = | [mm] | **100** |
| Minimum edge distance | $c_{min}$ | = | [mm] | **100** |

**Scheme of distances and spacing**

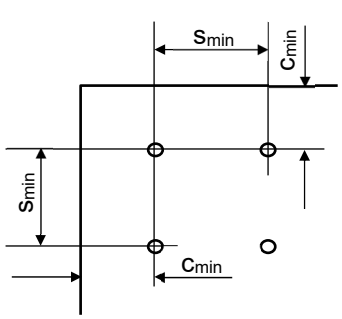


| | |
|---|---|
| **fischer TermoZ CS 8 and fischer TermoZ CS II 8** | **Annex B3** of European Technical Assessment ETA-14/0372 |
| Installation parameters for use categories | |

## Installation instructions for TermoZ CS 8 and CS II 8

### Standard setting of anchor (plain surface setting)

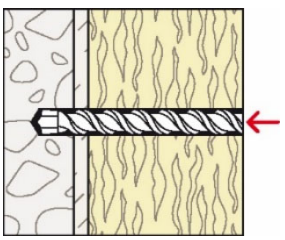

1. Drill hole by corres-ponding drilling method

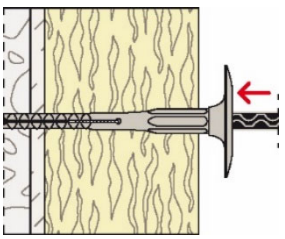

2.Insert anchor manually

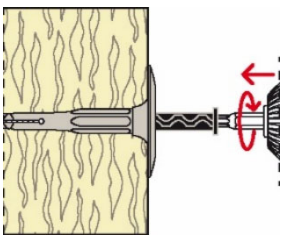

3.Set anchor by machine

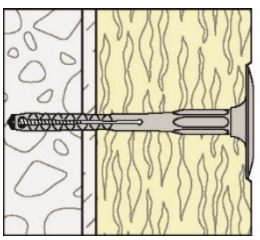

4.Correctly installed anchor

### Setting of anchor (plain surface setting) by setting tool

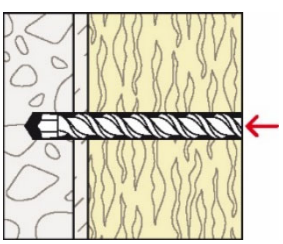

1.Drill hole by corres-ponding drilling method

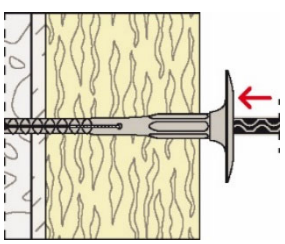

2.Insert anchor manually

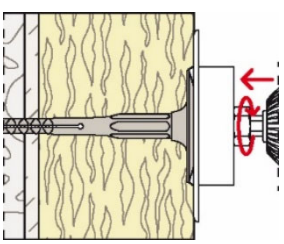

3.Set anchor by setting tool with the machine

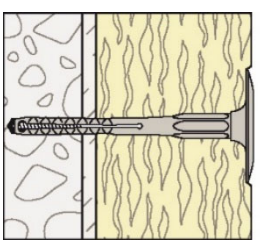

4.Correctly installed anchor

### Setting of anchor (countersunk) by setting tool

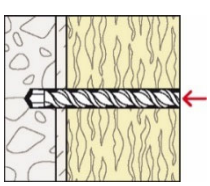

1.Drill hole by corresponding drilling method

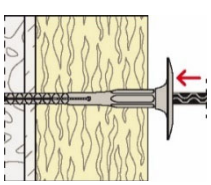

2.Insert anchor manually

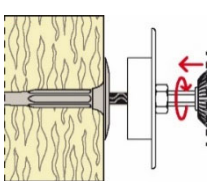

3. Put on setting tool

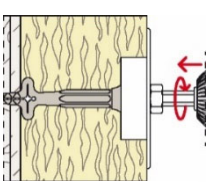

4. Set anchor by setting tool with the machine

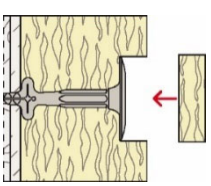

5.Put on polystyrene or mineral wool cap

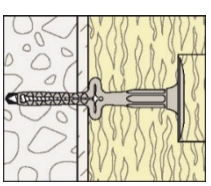

6.Correctly installed anchor

### Setting of DT 110 V anchor by setting tool

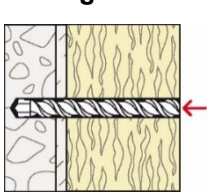

1.Drill hole by corresponding drilling method

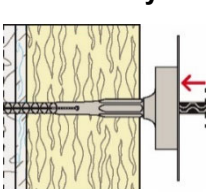

2.Insert anchor manually

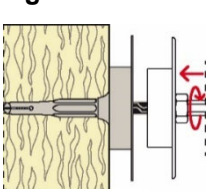

3. Put on setting tool

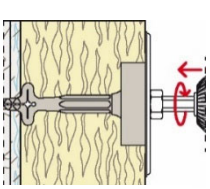

4. Set anchor by setting tool with the machine

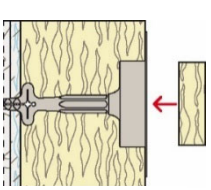

5.Put on polystyrene or mineral wool cap

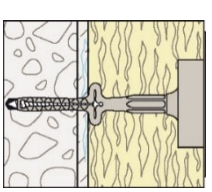

6.Correctly installed anchor

| | |
|---|---|
| **fischer TermoZ CS 8 and fischer TermoZ CS II 8** | **Annex B4** |
| Installation procedure | of European Technical Assessment ETA-14/0372 |

**Table C1.1: Characteristic resistance to tension loads $N_{Rk}$ in concrete and masonry for a single anchor in kN / TermoZ CS 8 / 95-115 and 275-375 for base material groups A, B and C**

| Base material | Group | Bulk density class ρ [kg/dm³] | Minimum compressive strength $f_b$ [N/mm²] | Remarks | Drill mode[1)] | Characteristic resistance TermoZ CS 8 $N_{Rk}$ [kN] |
|---|---|---|---|---|---|---|
| Concrete ≥ C12/15 to < C50/60 | A | EN 206-1:2000 | | - | H | **1,2** |
| Concrete C50/60 | | | | | | **1,5** |
| Weather resistant concrete shell ≥ C20/25 | A | | | h ≥ 42 mm | H | **1,2** |
| Weather resistant concrete shell C50/60 | | | | h ≥ 42 mm | | **1,5** |
| Solid Clay bricks e.g. acc. to EN 771-1:2015, Mz | B | ≥ 1,8 | 20 | Cross section reduced up to 15% by perforation vertically to the resting area | H | **1,5** |
| Calcium silicate solid bricks, e.g. acc. to EN 771-2:2015, KS | B | ≥ 1,8 | 20 | Cross section reduced up to 15% by perforation vertically to the resting area | H | **1,5** |
| | | | 12 | | | **0,9** |
| Solid lightweight concrete block, e.g. acc. to EN 771-3:2015 Vbl | B | ≥ 1,4 | 8 | Cross section reduced up to 15% by perforation vertically to the resting area | H | **0,5** |
| Solid concrete block, e.g. acc. to EN 771-3:2015, Vbn | B | ≥ 2,0 | 20 | Cross section reduced up to 15% by perforation vertically to the resting area | H | **1,2** |
| | | | 12 | | | **0,75** |
| Vertically perforated clay bricks e.g. acc. to EN 771-1:2015, HLz | C[2)] | ≥ 1,0 | 12 | Cross section reduced between 15% and 50% by perforation vertically to the resting area. Exterior web thickness ≥ 12 mm | R | **0,6** |
| | | ≥ 1,6 | 48 | | | **1,5** |
| Hollow calcium silicate brick, acc. to EN 771-2:2015, KSL | C[2)] | ≥ 1,4 | 20 | Cross section reduced between 15% and 50% by perforation vertically to the resting area. Exterior web thickness ≥ 23 mm | H | **0,9** |
| | | | 12 | | | **0,5** |

[1)] H = Hammer drilling, R = Rotary drilling
[2)] Cat. "C" values valid for reduced anchorage depth 25 mm see Annex B2 Table B2.2

**Table C2.1: Charateristic resistance to tension loads $N_{Rk}$ in masonry and aereated concrete for a single anchor in kN / TermoZ CS 8/95-115 and 275-375 for base material groups C, D and E**

| Base material | Group | Bulk density class ρ [kg/dm³] | Minimum compressive strength $f_b$ [N/mm²] | Remarks | Drill mode[1)] | Characteristic resistance TermoZ CS 8 $N_{Rk}$ [kN] |
|---|---|---|---|---|---|---|
| Hollow brick lightweight concrete, e.g. acc. to EN 771-3:2015 Hbl | C[2)] | ≥ 0,9 | 4 | Exterior web thickness ≥ 20 mm | H | **0,5** |
| Hollow brick concrete, e.g. acc. to EN 771-3:2015 Hbn | C[2)] | ≥ 1,2 | 10 | Exterior web thickness ≥ 38 mm | H | **1,2** |
| | | | 8 | | | **0,9** |
| | | | 6 | | | **0,75** |
| | | | 4 | | | **0,5** |
| Lightweight Aggregate Concrete ≥ LAC 6 | D | ≥ 0,9 | 6 | EN 1520:2011-06 | H | **0,75** |
| Autoclaved aerated concrete blocks, e.g. AAC acc. to EN 771-4:2015 $h_{nom}$ = 35mm | E | ≥ 0,50 | 4 | | R | **0,3** |
| Autoclaved aerated concrete blocks, e.g. AAC acc. to EN 771-4:2015 $h_{nom}$ = 55 mm | | | | | | **0,6** |

[1)] H = Hammer drilling, R = Rotary drilling
[2)] Cat. "C" values valid for reduced anchorage depth 25 mm see Annex B2 Table B2.2

**Table C3.1: Characteristic resistance to tension loads $N_{Rk}$ in concrete and masonry for a single anchor in kN / TermoZ CS II 8/135-255 for base material groups A, B and C**

| Base material | Group | Bulk density class ρ [kg/dm³] | Minimum compressive strength $f_b$ [N/mm²] | Remarks | Drill mode[1)] | Characteristic resistance TermoZ CS II 8 $N_{Rk}$ [kN] |
|---|---|---|---|---|---|---|
| Concrete ≥ C12/15 to ≤ C50/60 | A | - | | EN 206-1:2000 | H | **1,5** |
| Weather resistant concrete shell ≥ C20/25 | A | - | - | EN 206-1:2000 ; h≥ 40 mm | H | **1,5** |
| Solid Clay bricks e.g. acc. to EN 771-1:2015, Mz | B | ≥ 1,8 | 20 | Cross section reduced up to 15% by perforation vertically to the resting area | H | **1,5** |
| Calcium silicate solid bricks, e.g. acc. to EN 771-2:2015, KS | B | ≥ 1,4 | 20 | Cross section reduced up to 15% by perforation vertically to the resting area | H | **1,5** |
| | | | 12 | | | |
| Solid lightweight concrete block, e.g. acc. to EN 771-3:2015, Vbl | B | ≥ 1,4 | 8 | Cross section reduced up to 15% by perforation vertically to the resting area | H | **1,2** |
| Solid concrete block, e.g. acc. to EN 771-3:2015, Vbn | B | ≥ 2,0 | 20 | Cross section reduced up to 15% by perforation vertically to the resting area | H | **1,5** |
| | | | 12 | | | |
| Vertically perforated clay bricks, e.g. acc. to EN 771-1:2015, HLz | C | ≥ 0,9 | 12 | Cross section reduced between 15% and 50% by perforation vertically to the resting area. Exterior web thickness ≥ 12 mm | R | **1,0** |
| | | | 12 | | H | **0,65** |
| | | ≥ 1,6 | 48 | | R | **1,5** |
| | | | 48 | | H | **1,5** |
| Hollow calcium silicate brick, e.g. acc. to EN 771-2:2015, KSL | C | ≥ 1,4 | 12 | Cross section reduced between 15% and 50% by perforation vertically to the resting area. Exterior web thickness ≥ 16 mm | H | **1,5** |

[1)] H = Hammer drilling, R = Rotary drilling

**Table C4.1: Char. resistance to tension loads $N_{Rk}$ in masonry and aereated concrete for a single anchor in kN / TermoZ CS II 8/135-255 for base material groups C, D and E**

| Base material | Group | Bulk density class ρ [kg/dm³] | Minimum compressive strength $f_b$ [N/mm²] | Remarks | Drill mode[1)] | Characteristic resistance TermoZ CS II 8 $N_{Rk}$ [kN] |
|---|---|---|---|---|---|---|
| Hollow brick lightweight concrete, e.g. acc. to EN 771-3:2015, Hbl | C | ≥ 0,9 | 4 | Exterior web thickness ≥ 16 mm | H | **0,5** |
| Hollow brick concrete, e.g. acc. to EN 771-3:2015, Hbn | C | ≥ 1,2 | 10 | Exterior web thickness ≥ 38 mm | H | **1,5** |
| | | | 8 | | | **1,5** |
| | | | 6 | | | **1,1** |
| | | | 4 | | | **0,75** |
| Lightweight Aggregate Concrete ≥ LAC 4 | D | ≥ 0,9 | 6 | EN 1520:2011-06 | H | **1,5** |
| | | | 4 | | | **0,95** |
| Autoclaved aerated concrete blocks, e.g. AAC acc. to EN 771-4:2015 $h_{nom}$ = 32,5 mm | E | ≥ 0,50 | 4 | | R | **0,65** |
| Autoclaved aerated concrete blocks, e.g. AAC acc. to EN 771-4:2015 $h_{nom}$ = 52,5 mm | E | | | | | **1,1** |

[1)] H = Hammer drilling, R = Rotary drilling

**Table C5.1: Point thermal transmittance acc. to EOTA Technical Report TR 025:2016-05**

| Anchor type TermoZ CS 8 | Thickness of insulation material $h_D$ [mm] | Point thermal transmittance $\chi$ [W/K] |
|---|---|---|
| TermoZ CS 8 / 95 – 115 flush mounted | 60 - 80 | 0,001 |
| TermoZ CS 8 / 315 – 375 flush mounted | 280 - 340 | 0,001 |
| TermoZ CS 8 / 275 – 295 Renovation type flush mounted | 240 - 260 | 0,002 |
| TermoZ CS 8 / 115 countersunk mounted | 80 | 0,001 |
| TermoZ CS 8 / 315 – 375 countersunk mounted | 280 - 340 | 0,001 |
| TermoZ CS 8 / 275 – 295 Renovation type countersunk mounted | 240 - 260 | 0,001 |

**Table C5.2: Point thermal transmittance acc. to EOTA Technical Report TR 025:2016-05**

| Anchor Type TermoZ CS II 8 135 - 255 | $h_{nom}$ [mm] | Thickness of insulation material $h_D$ [mm] | Point thermal transmittance $\chi$ [W/K] | | | | |
|---|---|---|---|---|---|---|---|
| | | | Category **A** | Category **B** | Category **C** | Category **D** | Category **E** |
| Flush mounted | 32,5mm | 100 - 120 | 0,001 | | | | |
| | | 140 - 200 | 0,002 | | | 0,001 | |
| | | 220 | 0,002 | | | | 0,001 |
| | 52,5mm | 100 - 120 | - | | | | 0,001 |
| | | 140 - 220 | - | | | | 0,001 |
| Countersunk mounted | 32,5mm | 100 - 120 | 0,001 | | | | |
| | | 140 - 200 | 0,001 | | | | |
| | | 220 | 0,002 | | | | 0,001 |
| | 52,5mm | 100 - 120 | - | | | | 0,000 |
| | | 140 - 220 | - | | | | 0,001 |

| | |
|---|---|
| **fischer TermoZ CS 8 and fischer TermoZ CS II 8** | **Annex C5** of European Technical Assessment ETA-14/0372 |
| Performance - Point thermal transmittance | |

**Table C6.1: Plate stiffness acc. to EOTA Technical Report TR 026:2016-05**

| Anchor type | Max. size of the anchor plate [mm] | Load resistance of the anchor plate [kN] | Plate stiffness [kN/mm] |
|---|---|---|---|
| TermoZ CS 8 | 60 | 1,7 | 0,6 |
| TermoZ CS II 8 | 60 | 2,61 | 1,29 |

**Table C6.2: Displacements of the TermoZ CS 8 / 95–115 and 275-375**

| Base material | Tension load $N_{Rd}$ [kN] | Displace-ments $\Delta(\delta_N)$ [mm] |
|---|---|---|
| Concrete ≥ C12/15 (EN 206-1:2001) | 0,40 | < 0,3 |
| Concrete ≥ C50/60 (EN 206-1:2001) | 0,50 | < 0,3 |
| Weather resistant concrete shell ≥ C20/C25 (EN 206-1:2001) | 0,40 | < 0,4 |
| Weather resistant concrete shell C50/60 (EN 206-1:2001) | 0,50 | < 0,4 |
| Clay brick e.g. acc. to EN 771-1:2015, Mz 20 | 0,50 | < 0,3 |
| Calcium silicate solid bricks e.g. acc. to EN 771-2 :2015, KS 20 | 0,50 | < 0,3 |
| Calcium silicate solid bricks e.g. acc. to EN 771-2 :2015, KS 12 | 0,30 | |
| Solid lightweight concrete block e.g. acc. to EN 771-3 :2015, Vbl8 | 0,17 | < 0,2 |
| Solid concrete block e.g. acc. to EN 771-3:2015, Vbn 20 | 0,40 | < 0,3 |
| Solid concrete block e.g. acc. to EN 771-3:2015, Vbn 12 | 0,25 | |
| Vertically perforated clay brick e.g. acc. to EN 771-1:2015, Hlz 12 | 0,20 | < 0,2 |
| Vertically perforated clay brick e.g. acc. to EN 771-1:2015, Hlz 48 | 0,50 | < 0,3 |
| Hollow calcium silicate brick e.g. acc. to EN 771-2:2015, KSL 20 | 0,30 | < 0,2 |
| Hollow calcium silicate brick e.g. acc. to EN 771-2:2015, KSL 12 | 0,17 | |
| Hollow brick lightweight concrete e.g. acc. to EN 771-3:2015, Hbl 4 | 0,17 | < 0,1 |
| Hollow brick concrete e.g. acc. to EN 771-3:2015, Hbn 10 | 0,40 | < 0,2 |
| Hollow brick concrete e.g. acc. to EN 771-3:2015, Hbn 8 | 0,30 | |
| Hollow brick concrete e.g. acc. to EN 771-3:2015, Hbn 6 | 0,25 | |
| Hollow brick concrete e.g. acc. to EN 771-3:2015, Hbn 4 | 0,17 | |
| Lightweight Aggregate Concrete ≥ LAC 6 EN 1520:2011-06 | 0,25 | < 0,2 |
| Autoclaved aerated concrete blocks EN 771-4:2015, AAC 4 $h_{nom}$ = 35 mm | 0,10 | < 0,1 |
| Autoclaved aerated concrete blocks EN 771-4:2015, AAC 4, $h_{nom}$ = 55 mm | 0,20 | < 0,1 |

| | |
|---|---|
| **fischer TermoZ CS 8 and fischer TermoZ CS II 8** | **Annex C6** of European Technical Assessment ETA-14/0372 |
| Plate stiffness and displacements | |

**Table C7.1: Displacements of the TermoZ CS II 8 / 135 - 255**

| Base material | Tension load $N_{Rd}$ [kN] | Displace-ments $\Delta(\delta_N)$ [mm] |
|---|---|---|
| Concrete ≥ C12/15 (EN 206-1:2001) ≤ C50/60 | 0,5 | < 0,3 |
| Weather resistant concrete shell ≥ C20/C25 (EN 206-1:2001) | 0,5 | < 0,3 |
| Clay brick e.g. acc. to EN 771-1:2015, Mz 20 | 0,5 | < 0,5 |
| Calcium silicate solid bricks e.g. acc. to EN 771-2 :2015, KS 20 | 0,5 | < 0,3 |
| Calcium silicate solid bricks e.g. acc. to EN 771-2 :2015, KS 12 | 0,5 | |
| Solid lightweight concrete block e.g. acc. to EN 771-3 :2015, Vbl 8 | 0,43 | < 0,4 |
| Solid concrete block e.g. acc. to EN 771-3:2015, Vbn 20 | 0,5 | < 0,3 |
| Solid concrete block e.g. acc. to EN 771-3:2015, Vbn 12 | 0,5 | |
| Vertically perforated clay brick e.g. acc. to EN 771-1:2015, Hlz 12 rotary drilling | 0,33 | < 0,5 |
| Vertically perforated clay brick e.g. acc. to EN 771-1:2015, Hlz 12 hammer drilling | 0,22 | < 0,3 |
| Vertically perforated clay brick e.g. acc. to EN 771-1:2015, Hlz 48 rotary drilling | 0,5 | < 0,4 |
| Vertically perforated clay brick e.g. acc. to EN 771-1:2015, Hlz 48 hammer drilling | 0,5 | |
| Hollow calcium silicate brick e.g. acc. to EN 771-2:2015, KSL 12 | 0,5 | < 0,4 |
| Hollow brick lightweight concrete e.g. acc. to EN 771-3:2015, Hbl 4 | 0,17 | < 0,2 |
| Hollow brick concrete e.g. acc. to EN 771-3:2015, Hbn 10 | 0,5 | < 0,4 |
| Hollow brick concrete e.g. acc. to EN 771-3:2015, Hbn 8 | 0,5 | < 0,4 |
| Hollow brick concrete e.g. acc. to EN 771-3:2015, Hbn 6 | 0,37 | < 0,3 |
| Hollow brick concrete e.g. acc. to EN 771-3:2015, Hbn 4 | 0,25 | < 0,2 |
| Lightweight Aggregate Concrete ≥ LAC 6 EN 1520 | 0,5 | < 0,5 |
| Lightweight Aggregate Concrete ≥ LAC 4 EN 1520 | 0,32 | < 0,5 |
| Autoclaved aerated concrete blocks e.g. acc. to EN 771-4:2015, AAC 4, $h_{nom}$ = 32,5 mm | 0,22 | < 0,2 |
| Autoclaved aerated concrete blocks e.g. acc. to EN 771-4:2015, AAC 4, $h_{nom}$ = 52,5 mm | 0,37 | |