DECLARAȚIA DE PERFORMANȚĂ

DoP 0183

pentru sistem de injecție fischer FIS EM plus (Mortar pentru conexiuni de armare postinstalate) RO

1. Cod unic de identificare al produsului-tip:	**DoP 0183**	
2. Utilizare (utilizări) preconizată (preconizate):	**Sistem pentru conectarea armăturilor post-instalate cu mortar pentru utilizare în beton pentru încărcare seismică.**	
	Consultați suplimentul, în special anexele	**B1- B11**
3. Fabricant:	**fischerwerke GmbH & Co. KG, Otto-Hahn-Straße 15, 79211 Denzlingen, Germany**	
4. Reprezentant autorizat:	**–**	
5. Sistemul (sistemele) de evaluare și de verificare a constanței performanței:	**1**	
6. Documentul de evaluare european:	**EAD 331522-00-0601 (2018-07-03)**	
Evaluarea tehnică europeană:	**ETA-17/1056; 2020-01-07**	
Organismul de evaluare tehnică:	**DIBt- Deutsches Institut für Bautechnik**	
Organism (organisme) notificat(e):	**1343 MPA Darmstadt / 2873 TU Darmstadt**	
7. Performanța (performanțe) declarată (declarate):		
Rezistență mecanică și stabilitate (BWR 1)		
Rezistența caracteristică la întindere (pentru încărcări statice şi cvasistatice):	Aderența pentru armături post-instalate:	Anexele C2
	Factor de reducere:	Anexele C1
	Factor de amplificare pentru lungimea minimă de	Anexele C1
Rezistență caracteristică pentru încărcare seismică:	Aderența sub acțiunea forțelor seismice:	Anexele C3
	Factor de reducere:	Anexele C3
	Grosimea minimă a stratului de acoperire cu beton:	Anexele B5
Siguranța în caz de incendiu (BWR 2)		
Reacție la foc:	Clasa (A1)	
Rezistența la incendiu:	Aderența la temperatură ridicată:	Anexele C4, C5

8. Documentație tehnică adecvată și/sau documentație tehnică specifică: –

Performanța produsului identificat mai sus este în conformitate cu setul de performanțe declarate. Această declarație de performanță este eliberată în conformitate cu Regulamentul (UE) nr. 305/2011, pe răspunderea exclusivă a fabricantului identificat mai sus.

Semnată pentru și în numele fabricantului de către:

ppa.

Thilo Pregartner, Dr.-Ing.

i.V.

Peter Schillinger, Dipl.-Ing.

Tumlingen, 2020-01-21

Această declarație de performanță a fost întocmită în mai multe limbi. În cazul unei divergențe de interpretare, versiunea în limba engleză prevalează întotdeauna.

Suplimentul include informații voluntare și complementare în limba engleză, în afara cerințelor legale (specificate neutru din punct de vedere al limbii).

Specific Part

1 Technical description of the product

The subject of this European technical assessment is the post-installed connection, by anchoring or overlap connection joint, of reinforcing bars (rebars) in existing structures made of normal weight concrete, using the injection mortar FIS EM Plus in accordance with the regulations for reinforced concrete construction.

Reinforcing bars with a diameter ϕ from 8 to 40 mm or the fischer rebar anchor FRA of sizes M12 to M24 according to Annex A and the fischer injection mortar FIS EM Plus are used for the post-installed rebar connection. The steel element is placed into a drilled hole filled with injection mortar and is anchored via the bond between embedded reinforcing bar, injection mortar and concrete.

The product description is given in Annex A.

2 Specification of the intended use in accordance with the applicable European assessment Document

The performances given in Section 3 are only valid if the anchor is used in compliance with the specifications and conditions given in Annex B.

The verifications and assessment methods on which this European Technical Assessment is based lead to the assumption of a working life of the rebar connections of at least 50 years. The indications given on the working life cannot be interpreted as a guarantee given by the producer, but are to be regarded only as a means for choosing the right products in relation to the expected economically reasonable working life of the works.

3 Performance of the product and references to the methods used for its assessment

3.1 Mechanical resistance and stability (BWR 1)

Essential characteristic	Performance
Characteristic resistance under static and quasi-static loading	See Annex C 1 and C 2
Characteristic resistance under seismic action	See Annex C 3

3.2 Safety in case of fire (BWR 2)

Essential characteristic	Performance
Reaction to fire	Class A1
Resistance to fire	See Annex C 4 and C 5

4 Assessment and verification of constancy of performance (AVCP) system applied, with reference to its legal base

In accordance with European Assessment Document EAD No. 331522-00-0601, the applicable European legal act is: [96/582/EC].

The system to be applied is: 1

Installation conditions and application examples reinforcing bars, part 1

Figure A1.1:

Overlap joint with existing reinforcement for rebar connections of slabs and beams

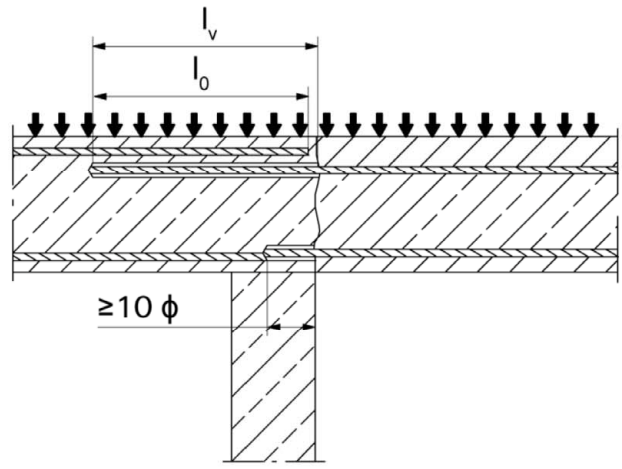

Figure A1.2:

Overlap joint with existing reinforcement at a foundation of a column or wall where the rebars are stressed

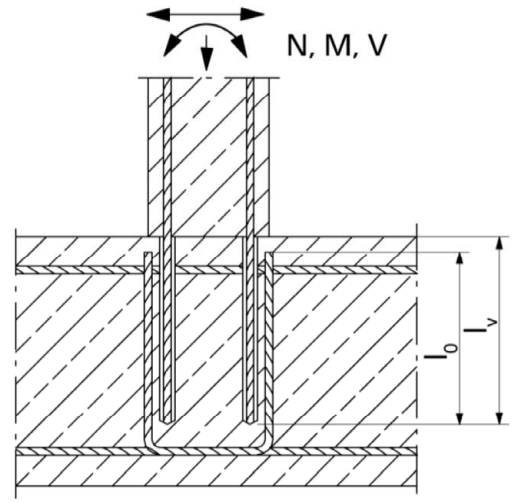

Figure A1.3:

End anchoring of slabs or beams (e.g. designed as simply supported)

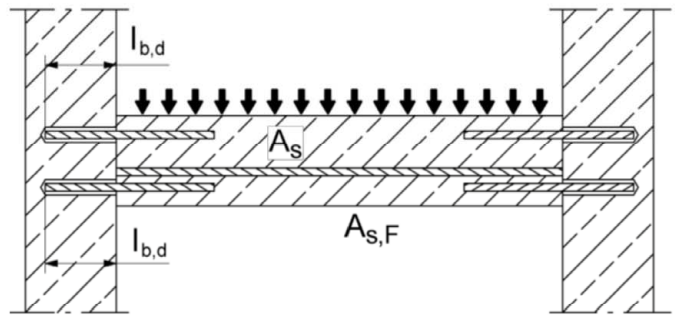

Figures not to scale

Rebar connection with fischer injection mortar FIS EM Plus

Product description
Installation conditions and application examples reinforcing bars, part 1

Annex A 1

Installation conditions and application examples reinforcing bars, part 2

Figure A2.1:
Rebar connection for stressed primarily in compression

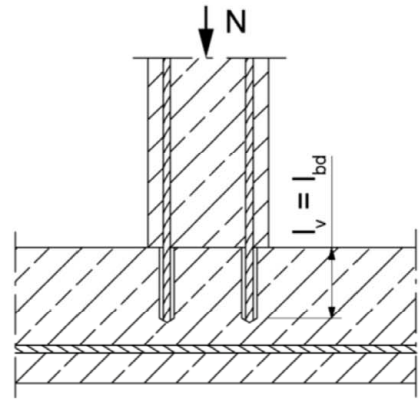

Figure A2.2:
Anchoring of reinforcement to cover the enveloped line of acting tensile force in the bending member

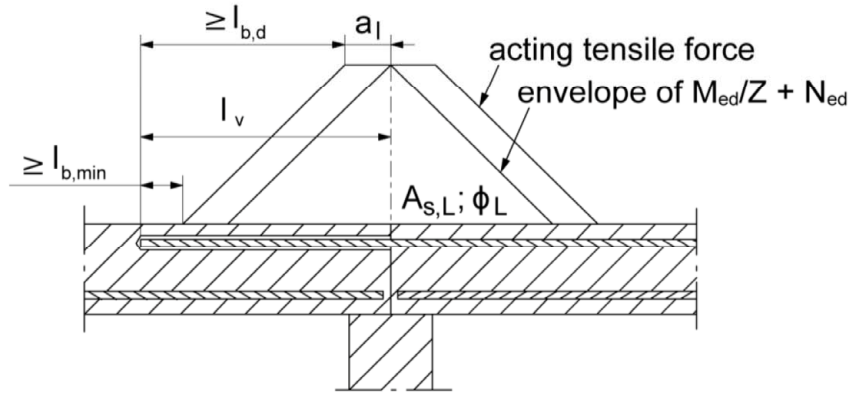

Note to **figure A1.1** to **A1.3** and **figure A2.1** to **A2.2**

In the figures no traverse reinforcement is plotted, the transverse reinforcement shall comply with EN 1992-1-1: 2004+AC:2010.

Preparing of joints according to **Annex B 2**

Figures not to scale

Installation conditions and application examples fischer rebar anchor FRA, part 3

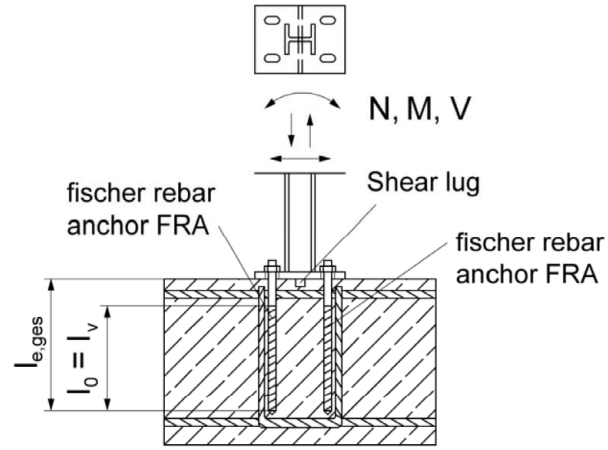

Figure A3.1:
Lap to a foundation of a column under bending.

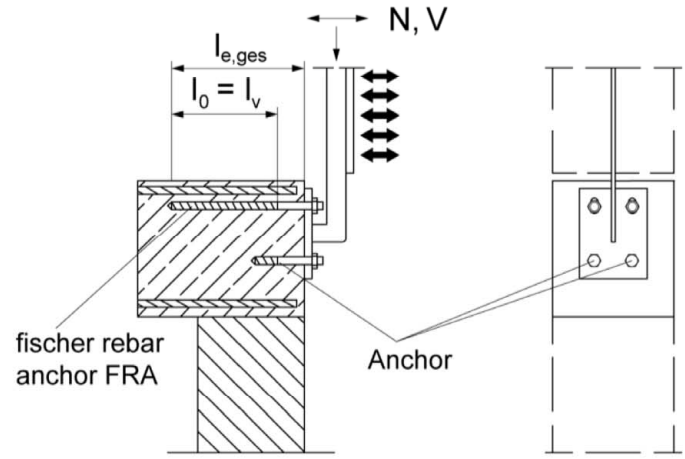

Figure A3.2:
Lap of the anchoring of guardrail posts.
In the anchor plate, the drill holes for the fischer rebar anchors FRA have to be designed as slotted holes with axial direction to the shear force.

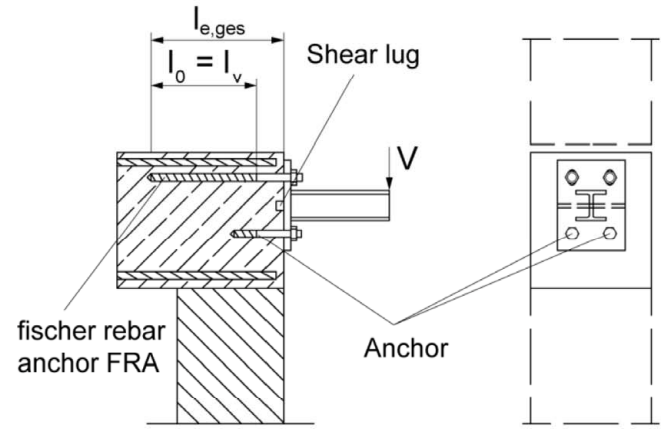

Figure A3.3:
Lap of the anchoring of cantilevered building components.
In the anchor plate, the drill holes for the fischer rebar anchors FRA have to be designed as slotted holes with axial direction to the shear load.

The required transverse reinforcement acc. to EN 1992-1-1:2004+AC:2010 is not shown in the figures. **The fischer rebar anchor FRA may be only used for axial tensile force.** The tensile force must transferred by lap to the existing reinforcement of the building. The transfer of the shear force has to be ensured by suitable measure, e.g. by means of shear force or anchors with European Technical Assessment (ETA)

Figures not to scale

Overview system components

Injection cartridge (shuttle cartridge) FIS EM Plus with sealing cap
Sizes: 390 ml, 585 ml, 1100 ml, 1500 ml

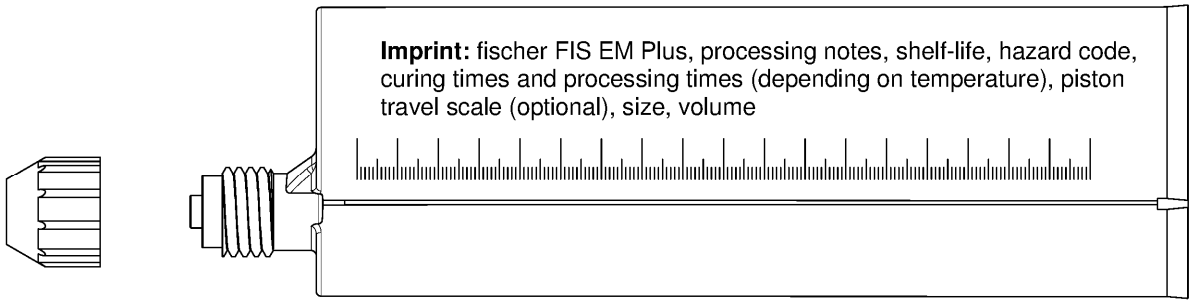

Static mixer FIS MR Plus for injection cartridge 390 ml

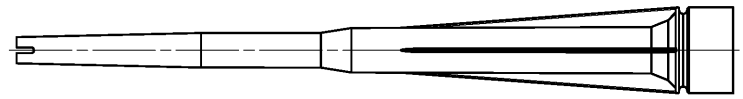

Static mixer FIS UMR for injection cartridge 585 ml to 1500 ml

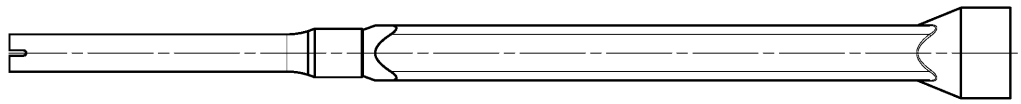

Injection adapter and extension tube Ø 9 for static mixer FIS MR Plus;
Injection adapter and extension tube Ø 9 or Ø 15 for static mixer FIS UMR

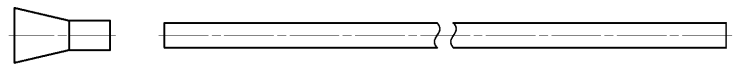

Reinforcing bar (rebar)
Sizes: ϕ8, ϕ10, ϕ12, ϕ14, ϕ16, ϕ20, ϕ22, ϕ24, ϕ25, ϕ26, ϕ28, ϕ30, ϕ 32, ϕ34, ϕ36, ϕ40

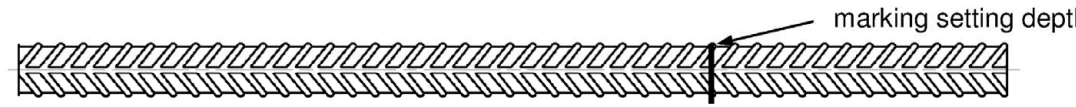

fischer rebar anchor FRA
Sizes: M12, M16, M20, M24

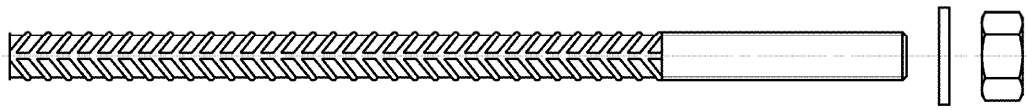

Blow out pump ABP

Figures not to scale

Rebar connection with fischer injection mortar FIS EM Plus

Product description
Overview system components;
Injection mortar, reinforcing bar, rebar anchor, blow out pump

Annex A 4

Properties of reinforcing bars (rebar)

Figure A5.1:

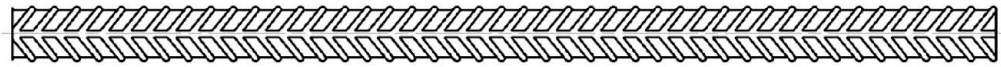

- The minimum value of related rip area $f_{R,min}$ according to EN 1992-1-1:2004+AC:2010
- The maximum outer rebar diameter over the rips shall be:
  - The nominal diameter of the rip $\phi + 2 * h$ ($h \leq 0{,}07 * \phi$)
  - (ϕ: Nominal diameter of the bar; h: rip height of the bar)

Table A5.1: Installation conditions for rebars

Nominal diameter of the bar		**ϕ**	**8[1)]**		**10[1)]**		**12[1)]**		**14**	**16**	**20**	**22**	**24**
Nominal drill hole diameter	d_0	[mm]	10	12	12	14	14	16	18	20	25	30	30
Drill hole depth	h_0		$h_0 = l_v$										
Effective embedment depth	l_v		acc. to static calculation										
Minimum thickness of concrete member	h_{min}		$l_v + 30$ (≥ 100)						$l_v + 2d_0$				

Nominal diameter of the bar		**ϕ**	**25**	**26**	**28**	**30**	**32**	**34**	**36**	**40**
Nominal drill hole diameter	d_0	[mm]	30	35	35	40	40	40	45	55
Drill hole depth	h_0		$h_0 = l_v$							
Effective embedment depth	l_v		acc. to static calculation							
Minimum thickness of concrete member	h_{min}		$l_v + 2d_0$							

Table A5.2: Materials of rebars

Designation	**Reinforcing bar (rebar)**
Reinforcing bar EN 1992-1-1:2004+AC:2010, Annex C	Bars and de-coiled rods class B or C with f_{yk} and k according to NDP or NCL of EN 1992-1-1/NA:2013 $f_{uk} = f_{tk} = k \cdot f_{yk}$

Figures not to scale

Properties of fischer rebar anchor FRA

Figure A6.1:

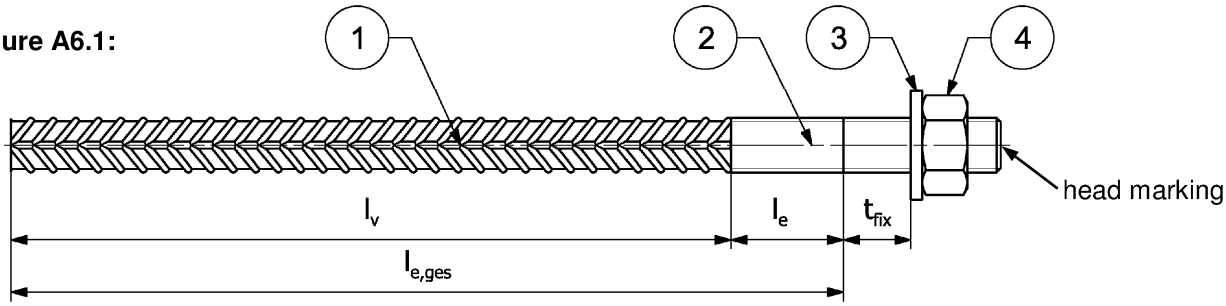

Head marking e.g.: FRA (for stainless steel)

FRA C (for high corrosion-resistant steel)

Table A6.1: Installation conditions for fischer rebar anchors FRA

Threaded diameter				**M12**		**M16**	**M20**	**M24**
Nominal diameter		ϕ	[mm]	12		16	20	25
Width across flat		SW	[mm]	19		24	30	36
Nominal drill bit diameter		d_0	[mm]	14[2)]	16	20	25	30
Drill hole depth ($h_0 = l_{ges}$)		$l_{e,ges}$	[mm]	$l_v + l_e$				
Effective embedment depth		l_v	[mm]	acc. to static calculation				
Distance concrete surface to welded join		l_e	[mm]	100				
Diameter of clearance hole in the fixture[1)]	Pre-positioned ≤ d_f		[mm]	14		18	22	26
	Push through ≤ d_f		[mm]	18		22	26	32
Minimum thickness of concrete member		h_{min}	[mm]	h_0+30 (≥ 100)		$h_0 + 2d_0$		
Maximum torque moment for attachment of the fixture		max T_{fix}	[Nm]	50		100	150	150

[1)] For bigger clearance holes in the fixture see EN 1992-4

[2)] Both drill bit diameters can be used

Table A6.2: Materials of fischer rebar anchors FRA

Part	Description	Materials	
		FRA	FRA C
1	Reinforcing bar	B500B acc. to DIN 488-1:2009	
2	Round bar with partial or full thread	Stainless steel acc. to EN 10088-1:2014	High corrosion-resistant steel acc. to EN 10088-1:2014
3	Washer	Stainless steel acc. to EN 10088-1:2014	High corrosion-resistant steel acc. to EN 10088-1:2014
4	Hexagon nut	Stainless steel acc. to EN 10088-1:2014, strength class 80; acc. to EN ISO 3506:2009	High corrosion-resistant steel acc. to EN 10088-1:2014, strength class 80; acc. to EN ISO 3506:2009

Figures not to scale

Specifications of intended use (part 1)

Table B1.1: Overview use and performance categories

Anchorages subject to		FIS EM Plus with …			
		Reinforcing bar		fischer rebar anchor FRA	
Hammer drilling with standard drill bit		all sizes			
Hammer drilling with hollow drill bit (fischer "FHD", Heller "Duster Expert"; Bosch „Speed Clean"; Hilti "TE-CD, TE-YD")		Nominal drill bit diameter (d_0) 12 mm to 35 mm			
Diamond drilling		all sizes			
Static and quasi static load, in	uncracked concrete	all sizes	Tables: C1.1 C1.2 C1.3 C2.1	all sizes	Tables: C1.1 C1.2 C1.3 C2.1
	cracked concrete				
Seismic action (only hammer drilling with standard / hollow drill bits)		all sizes	Tables: C3.1 C3.2 C3.3	no performance assessed	
Installation temperature		$T_{i,min}$ = -5 °C to $T_{i,max}$ = +40 °C			
Fire exposure		all sizes	Annex C4	no performance assessed	

Specifications of intended use (part 2)

Anchorages subject to:

- Static, quasi-static and seismic loads: reinforcing bar (rebar) size 8 mm to 40 mm
- Fire exposure

Base materials:

- Compacted reinforced or unreinforced normal weight concrete without fibres according to EN 206:2013+A1:2016
- Strength classes C12/15 to C50/60 according to EN 206:2013+A1:2016
- Maximum chloride content of 0,40 % (CL 0.40) related to the cement content according to EN 206:2013+A1:2016
- Non-carbonated concrete
  Note: In case of a carbonated surface of the existing concrete structure the carbonated layer shall be removed in the area of the post-installed rebar connection with a diameter of ϕ + 60 mm prior to the installation of the new rebar. The depth of concrete to be removed shall correspond to at least the minimum concrete cover in accordance with EN 1992-1-1 :2004+AC:2010. The foregoing may be neglected if building components are new and not carbonated and if building components are in dry conditions

Temperature Range:

- - 40°C to +80°C (max. short term temperature +80°C and max long term temperature +50°C).

Installation temperature:

- -5 °C to +40 °C

Use conditions (Environmental conditions) for fischer rebar anchors FRA:

- Structures subject to dry internal conditions (fischer rebar anchors FRA and FRA C)
- Structures subject to external atmospheric exposure (including industrial and marine environment) and to permanently damp internal condition, if no particular aggressive conditions exist (fischer rebar anchors FRA and FRA C)
- Structures subject to external atmospheric exposure and to permanently damp internal condition, if other particular aggressive conditions exist (fischer rebar anchors FRA C)
  Note: Particular aggressive conditions are e.g. permanent, alternating immersion in seawater or the splash zone of seawater, chloride atmosphere of indoor swimming pools or atmosphere with extreme chemical pollution (e.g. in desulphurization plants or road tunnels where de-icing materials are used)

Design:

- Anchorages are designed under the responsibility of an engineer experienced in anchorages and concrete work.
- Verifiable calculation notes and drawings are prepared taking account of the forces to be transmitted.
- Design according to EN 1992-1-1:2004+AC:2010 and Annex B 3 and B 4.
- The actual position of the reinforcement in the existing structure shall be determined on the basis of the construction documentation and taken into account when designing.

Installation:

- Dry or wet concrete
- It must not be installed in water filled holes
- Hole drilling by hammer drill, hollow drill, compressed air drill or diamond drill mode
- Overhead installation allowed
- The installation of post-installed rebar respectively fischer rebar anchor FRA shall be done only by suitable trained installer and under Supervision on site; the conditions under which an installer may be considered as suitable trained and the conditions for Supervision on site are up to the Member States in which the installation is done.
- Check the position of the existing rebars (if the position of existing rebars is not known, it shall be determined using a rebar detector suitable for this purpose as well as on the basis of the construction documentation and then marked on the building component for the overlap joint).

General construction rules for post-installed rebars

Figure B3.1:

- Only tension forces in the axis of the rebar may be transmitted
- The transfer of shear forces between new concrete and existing structure shall be designed additionally according to EN 1992-1-1:2004+AC:2010.
- The joints for concreting must be roughened to at least such an extent that aggregate protrude.

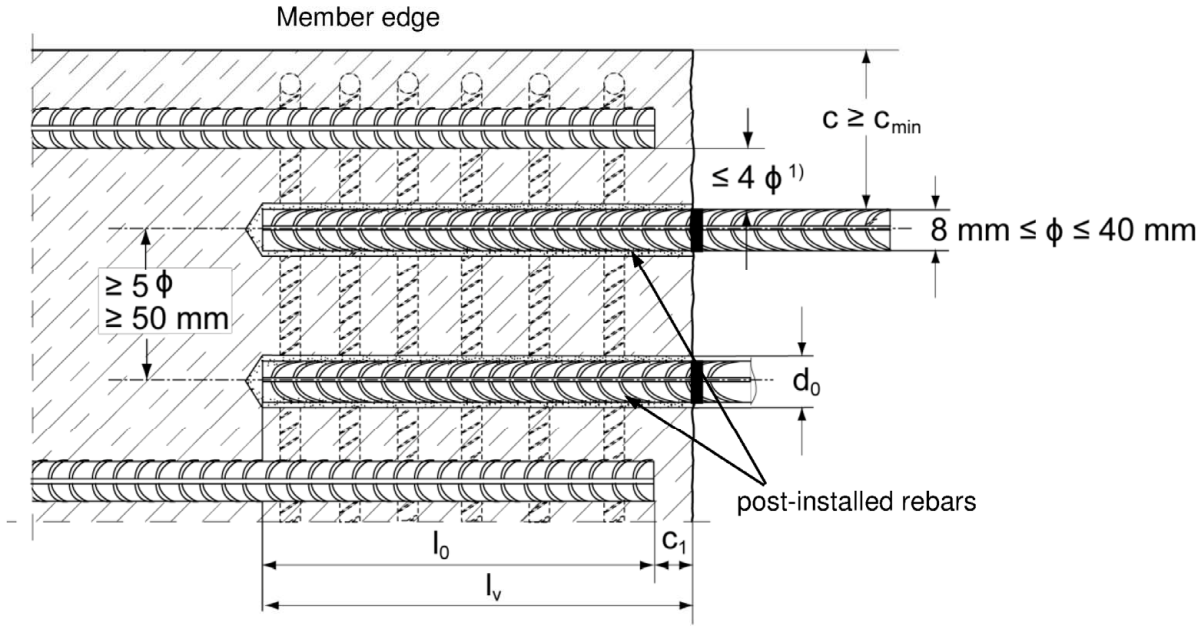

1) If the clear distance between lapped bars exceeds 4 ϕ then the lap length shall be increased by the difference between the clear bar distance and 4 ϕ

c	concrete cover of post-installed rebar
c_1	concrete cover at end-face of existing rebar
c_{min}	minimum concrete cover according to table B5.1 and to EN 1992-1-1:2004+AC:2010, Section 4.4.1.2
ϕ	nominal diameter of reinforcing bar
l_0	lap length, according to EN 1992-1-1:2004+AC:2010 for static loading and according to EN 1998-1:2004, section 5.6.3 for seismic loading
l_v	effective embedment depth, ≥: $l_0 + c_1$
d_0	nominal drill bit diameter, see Annex B 6

Figures not to scale

Figure B4.1:

- Only tension forces in the axis of the FRA may be transmitted.
- The tension force must be transferred via an overlap joint to the reinforcement in the building part.
- The transmission of the shear load shall be ensured by appropriate additional measures, e.g. by shear lugs or by anchors with a European Technical Assessment (ETA).
- In the anchor plate, the holes for the tension anchor shall be executed as slotted holes with the axis in the direction of the shear force.

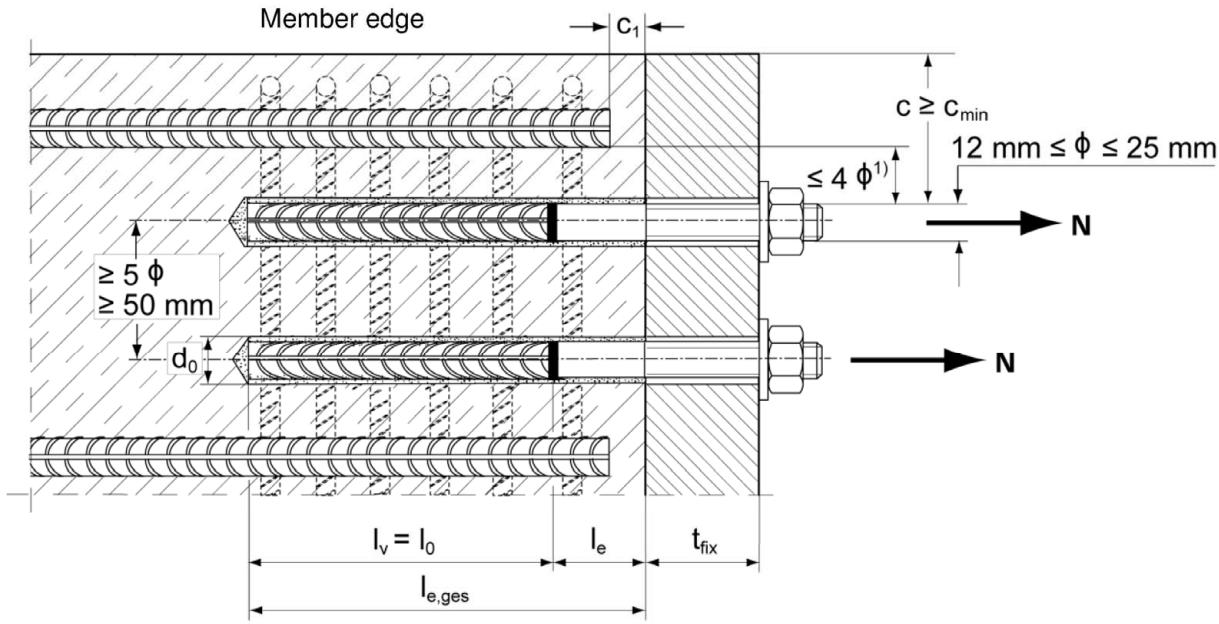

1) If the clear distance between lapped bars exceeds 4 ϕ then the lap length shall be increased by the difference between the clear bar distance and 4 ϕ.

c	concrete cover of post-installed rebar anchor FRA
c_1	concrete cover at end-face of existing rebar
c_{min}	minimum concrete cover according to table B5.1 and to EN 1992-1-1:2004+AC:2010, Section 4.4.1.2
ϕ	nominal diameter of reinforcing bar
l_0	lap length, according to EN 1992-1-1:2004+AC:2010, Section 8.7.3
$l_{e,ges}$	overall embedment depth, ≥ $l_0 + l_e$
d_0	nominal drill bit diameter, see Annex B 6
l_e	length of the bonded in threaded part
t_{fix}	thickness of the fixture
l_v	effective embedment depth

Figures not to scale

Table B5.1: Minimum concrete cover c_{min}[1)] depending of the drilling method and the drilling tolerance

Drilling method	nominal diameter of reinforcing bar ϕ [mm]	Minimum concrete cover c_{min}	
		Without drilling aid [mm]	Without drilling aid [mm]
Hammer drilling with standard drill bit	< 25	30 mm + 0,06 $l_v \geq 2\ \phi$	30 mm + 0,02 $l_v \geq 2\ \phi$
	≥ 25	40 mm + 0,06 $l_v \geq 2\ \phi$	40 mm + 0,02 $l_v \geq 2\ \phi$
Hammer drilling with hollow drill bit (fischer "FHD", Heller "Duster Expert"; Bosch „Speed Clean"; Hilti "TE-CD, TE-YD")	< 25	30 mm + 0,06 $l_v \geq 2\ \phi$	30 mm + 0,02 $l_v \geq 2\ \phi$
	≥ 25	40 mm + 0,06 $l_v \geq 2\ \phi$	40 mm + 0,02 $l_v \geq 2\ \phi$
Compressed air drilling	< 25	50 mm + 0,08 l_v	50 mm + 0,02 l_v
	≥ 25	60 mm + 0,08 $l_v \geq 2\ \phi$	60 mm + 0,02 $l_v \geq 2\ \phi$
Diamond drilling	< 25	30 mm + 0,06 $l_v \geq 2\ \phi$	30 mm + 0,02 $l_v \geq 2\ \phi$
	≥ 25	40 mm + 0,06 $l_v \geq 2\ \phi$	40 mm + 0,02 $l_v \geq 2\ \phi$

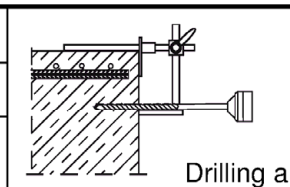
Drilling aid

[1)] See Annex B3, figure B3.1and Annex B4, figure B4.1
Note: The minimum concrete cover as specified in EN 1992-1-1:2004+AC:2010 must be observed.
The minimum cover applies to reinforcement elements under seismic loading, i.e. $c_{min,seis} = 2\ \phi$

Table B5.2: Dispensers and cartride sizes corresponding to maximum embedment depth $l_{v,max}$

reinforcing bars (rebar)	rebar anchor FRA	Manual dispenser	Accu and pneumatic dispenser (small)	Pneumatic dispenser (large)
		Cartridge size 390 ml, 585 ml	Cartridge size 390 ml, 585 ml	Cartridge size 1500 ml
ϕ [mm]	thread [M]	$l_{v,max}$ / $l_{e,ges,max}$ [mm]	$l_{v,max}$ / $l_{e,ges,max}$ [mm]	$l_{v,max}$ / $l_{e,ges,max}$ [mm]
8	---	1000	1000	1800
10	---			
12	FRA 12		1200	
14	---			
16	FRA 16		1500	
20	FRA 20	700	1300	
22 / 24 / 25	FRA 24		1000	2000
26 / 28	---	500	700	
30 / 32 / 34	---	no performance assessed	500	
36	---			
40	---			

Rebar connection with fischer injection mortar FIS EM Plus

Intended use
Minimum concrete cover;
dispenser and cartridge sizes corresponding to maximum embedment depth

Annex B 5

Appendix 12/ 23

Table B6.1: Working times t_{work} and curing times t_{cure}

Temperature in the anchorage base [°C]	Maximum working time[1] t_{work} **FIS EM Plus**	Minimum curing time[2] t_{cure} **FIS EM Plus**
>-5 to -1	240 min [3]	200 h
>±0 to +4	150 min [3]	90 h
>+5 to +9	120 min [3]	40 h
>+10 to +19	30 min	18 h
>+20 to +29	14 min	10 h
>+30 to +40	7 min [4]	5 h

[1] Maximum time from the beginning of the injection to rebar / FRA setting and positioning
[2] For wet concrete the curing time must be doubled
[3] If the temperature in the concrete falls below 10°C the cartridge has to be warmed up to +15°C.
[4] If the temperature in the concrete exceeds 30 °C the cartridge has to be cooled down to +15°C up to 20°C

Table B6.2: Installation tools for drilling and cleaning the bore hole and injection of the mortar

reinforcing bars (rebar)	rebar anchor FRA	Drilling and cleaning				Injection	
		Nominal drill bit diameter	Diameter of cutting edge	Steel brush diameter	Diameter of cleaning nozzle	Diameter of extension tube	Injection adapter
ϕ [mm]	thread [M]	d_0 [mm]	d_{cut} [mm]	d_b [mm]	[mm]	[mm]	[colour]
8[1]	---	10	≤ 10,50	11,0	11	9	---
		12	≤ 12,50	12,5			nature
10[1]	---	12	≤ 12,50	12,5			
		14	≤ 14,50	15			blue
12[1]	FRA 12[1]	14	≤ 14,50	15	15		
		16	≤ 16,50	17			red
14	---	18	≤ 18,50	19		9 or 15	yellow
16	FRA 16	20	≤ 20,55	21,5	19		green
20	FRA 20	25	≤ 25,55	26,5			black
22 / 24	---	30	≤ 30,55	32	28		grey
25	FRA 24	30	≤ 30,55	32			grey
26 / 28	---	35	≤ 35,70	37			brown
30 / 32 / 34	---	40	≤ 40,70	42	38		red
36	---	45	≤ 45,70	47			yellow
40	---	55	≤ 55,70	58			nature

[1] Both drill bit diameters can be used

Rebar connection with fischer injection mortar FIS EM Plus

Intended use
Working times and curing times;
Installation tools for drilling and cleaning the bore hole and injection of the mortar

Annex B 6

Safety regulations

Review the Material Safety Data Sheet (SDS) before use for proper and safe handling!

Wear well-fitting protective goggles and protective gloves when working with mortar FIS EM Plus

Important: Observe the instructions for use provided with each cartridge.

Installation instruction part 1; Installation with FIS EM Plus

Hole drilling

Note: Before drilling, remove carbonized concrete; clean contact areas (see Annex B 2)
In case of aborted drill holes the drill hole shall be filled with mortar.

1a **Hammer drilling or compressed air drilling**

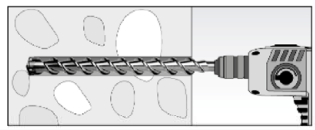

Drill the hole to the required embedment depth using a hammer drill with carbide drill bit set in rotation hammer mode or a pneumatic drill.
Drill bit sizes see table B6.2

1b **Hammer drilling with hollow drill bit**

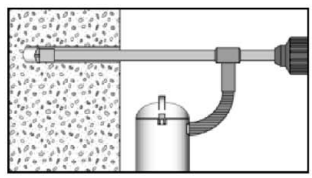

Drill the hole to the required embedment depth using a hammer drill with hollow drill bit in rotation hammer mode.
Dust extraction conditions see drill hole cleaning annex B8.
Drill bit sizes see table B6.2

1c **Diamond drilling**

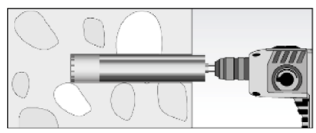

Drill the hole to the required embedment depth using a diamond drill in rotation mode.
Drill bit sizes see table B6.2

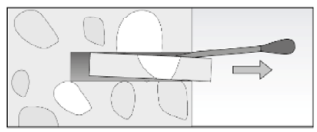

Break away the drill core and remove it

2

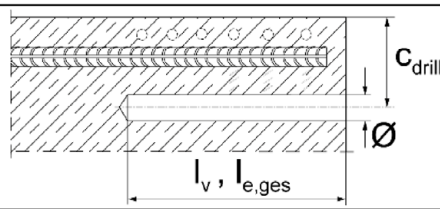

Measure and control concrete cover c
(c_{drill} = c + Ø / 2)
Drill parallel to surface edge and to existing rebar.
Where applicable use fischer drilling aid.

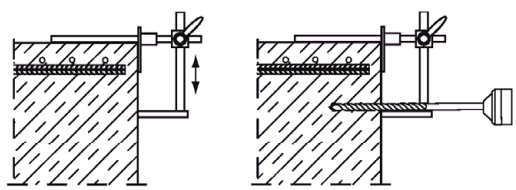

For holes l_v > 20 cm use drilling aid.
Three different options can be considered:

A) fischer drilling aid
B) Slat or spirit level
C) Visual check

Minimum concrete cover c_{min} see table B5.1

Rebar connection with fischer injection mortar FIS EM Plus

Intended use
Safety regulations; Installation instruction part 1, hole drilling

Annex B 7

Installation instruction part 2; Installation with FIS EM Plus

Drill hole cleaning

	Hammer or compressed air drilling	
3a	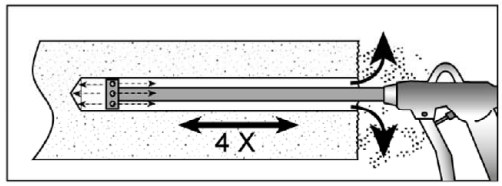	Blowing four times from the back of the hole with the appropriate nozzle (oil-free compressed air ≥ 6 bar) until return air stream is free of noticeable dust. Personal protective equipment must be used (see regulations Annex B7).
	Hammer drilling with hollow drill bit	
3b	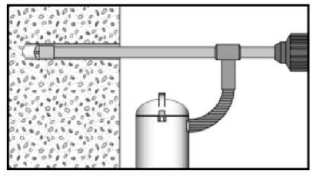	Use a suitable dust extraction system, e. g. fischer FVC 35 M or a comparable dust extraction system with equivalent performance data. Drill the hole with hollow drill bit. The dust extraction system has to extract the drill dust nonstop during the drilling process and must be adjusted to maximum power. No further drill hole cleaning necessary
	Diamond drilling	
3c	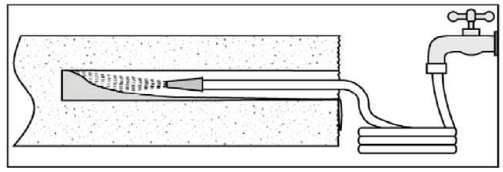	Flush the bore hole until the water comes clear
	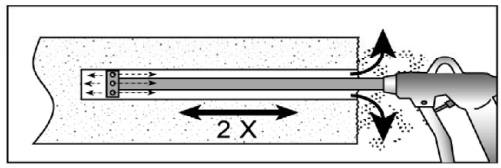	Blowing twice from the back of the hole with the appropriate nozzle (oil-free compressed air ≥ 6 bar) until return air stream is free of noticeable dust. Personal protective equipment must be used (see regulations Annex B7).
	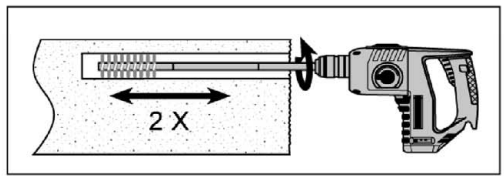	Check steel brush with brush control template. Fix an adequate steel brush with an extension into a drilling machine and brush the bore hole twice
	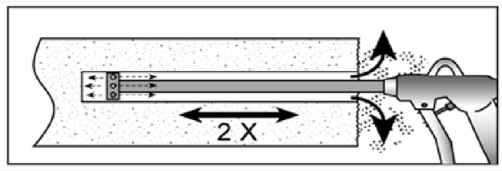	Blowing twice from the back of the hole with the appropriate nozzle (oil-free compressed air ≥ 6 bar) until return air stream is free of noticeable dust. Personal protective equipment must be used (see regulations Annex B7).

Installation instruction part 3; Installation with FIS EM Plus

reinforcing bars (rebar) / fischer rebar anchor FRA and cartridge preparation

4	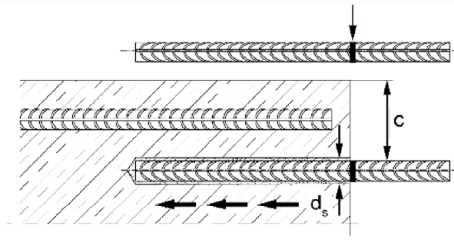	Before use, make asure that the rebar or the rebar anchor FRA is dry and free of oil or other residue. Mark the embedment depth l_v on the rebar (e.g. with tape) Insert rebar in borehole, to verify drill hole depth and setting depth l_v resp. $l_{e,ges}$
5	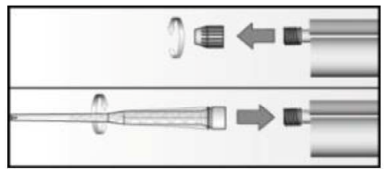	Twist off the sealing cap Twist on the static mixer (the spiral in the static mixer must be clearly visible).
6	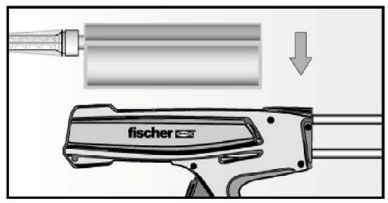	Place the cartridge into a suitable dispenser.
7	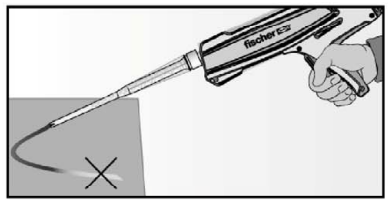	Press out approximately 10 cm of mortar until the resin is permanently grey in colour. Mortar which is not grey in colour will not cure and must be disposed.

Installation instruction part 4; Installation with FIS EM Plus

Injection of the mortar; borehole depth ≤ 250 mm

8a

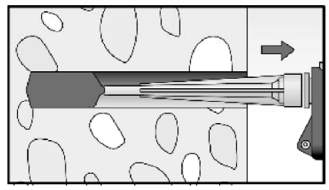

Inject the mortar from the back of the hole towards the front and slowly withdraw the mixing nozzle step by step with each trigger pull.
Avoid bubbles.
Fill holes approximately 2/3 full, to ensure that the annular gap between the rebar and the concrete will be completely filled with adhesive over the entire embedment length.

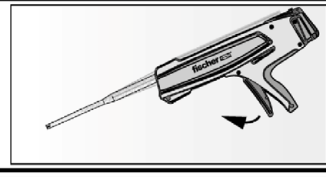

After injecting, release the dispenser. This will prevent further mortar discharge from the mixing nozzle.

Injection of the mortar; borehole depth > 250 mm

8b

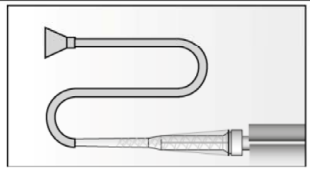

Assemble mixing nozzle FIS MR Plus or FIS UMR, extension tube and appropriate injection adapter (see table B 6.2)

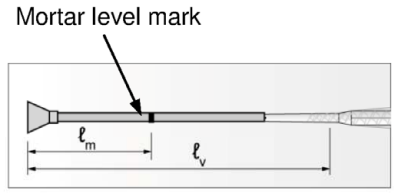

Mark the required mortar level l_m and embedment depth l_v resp. $l_{e,ges}$ with tape or marker on the injection extension tube.

a) Estimation:

$$l_m = \frac{1}{3} * l_v \; resp. \; l_m = \frac{1}{3} * l_{e,ges}$$

b) Precise equation for optimum mortar volume:

$$l_m = l_v \; resp. \; l_{e,ges} \left((1{,}2 * \frac{d_s^2}{d_0^2} - 0{,}2) \right) \text{[mm]}$$

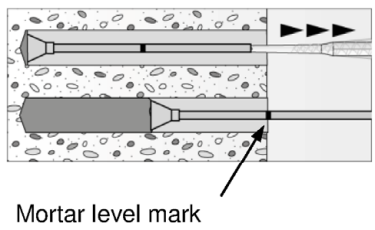

Insert injection adapter to back of the hole. Begin injection allowing the pressure of the injected adhesive mortar to push the injection adapter towards the front of the hole. Do not actively pull out!
Fill holes approximately 2/3 full, to ensure that the annular gap between the rebar and the concrete will be completely filled with adhesive over the embedment length.
When using an injection adapter continue injection until the mortar level mark l_m becomes visible.
Maximum embedment depth see table B 5.2

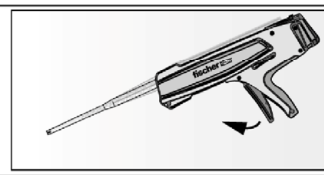

After injecting, release the dispenser. This will prevent further mortar discharge from the mixing nozzle.

Installation instruction part 5; Installation with FIS EM Plus

Insert rebar / rebar anchor FRA

9	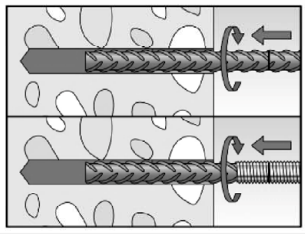	Insert the rebar / rebar anchor FRA slowly twisted into the borehole until the embedment mark is reached.
10	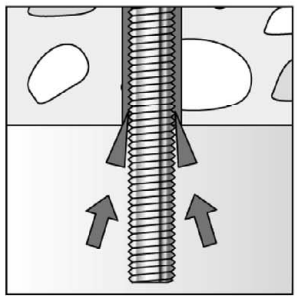	For overhead installation, support the rebar / rebar anchor FRA and secure it from falling till mortar started to harden, e.g. using wedges.
11	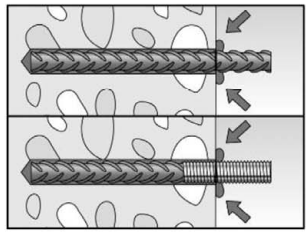	After installing the rebar or FRA the annular gap must be completely filled with mortar. Proper installation • Desired embedment depth is reached l_v: embedment mark at concrete surface. • Excess mortar flows out of the borehole after the rebar has been fully inserted up to the embedment mark.
12		Observe the working time "t_{work}" (see table B 6.1), which varies according to temperature of base material. Minor adjustments to the rebar / rebar anchor FRA position may be performed during the working time Full load may be applied only after the curing time "t_{cure}" has elapsed (see table B 6.1)
13	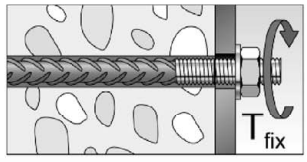	Mounting the fixture, max T_{fix} see table A 6.1

Minimum anchorage length and minimum lap length

The minimum anchorage length $l_{b,min}$ and the minimum lap length $l_{o,min}$ according to EN 1992-1-1 shall be multiply by the relevant amplification factor α_{lb} according to table C1.1.

Table C1.1: Amplification factor α_{lb} related to concrete strength class and drilling method

Concrete strength class	Drilling method	Amplification factor α_{lb}
C12/15 to C50/60	Hammer drilling with standard drill bit	1,0
	Hammer drilling with hollow drill bit (fischer "FHD", Heller "Duster Expert"; Bosch „Speed Clean"; Hilti "TE-CD, TE-YD")	1,0
	Compressed air drilling	1,0
	Diamond drilling	1,3

Table C1.2: Bond efficiency factor k_b for hammer drilling, hollow drilling and compressed air drilling

Hammer drilling, hollow drilling and compressed air drilling

Rebar / rebar anchor FRA ϕ [mm]	Bond efficiency factor k_b								
	Concrete strength class								
	C12/15	C16/20	C20/25	C25/30	C30/37	C35/45	C40/50	C45/55	C50/60
8 to 25	1,00								
26 to 40	1,00								0,93

Table C1.3: Bond efficiency factor k_b for diamond drilling

Diamond drilling

Rebar / rebar anchor FRA ϕ [mm]	Bond efficiency factor k_b								
	Concrete strength class								
	C12/15	C16/20	C20/25	C25/30	C30/37	C35/45	C40/50	C45/55	C50/60
8 to 12	1,00								
14 to 25	1,00							0,92	0,86
26 to 40	0,90					0,88	0,81	0,75	0,69

Rebar connection with fischer injection mortar FIS EM Plus

Performance
Amplification factor α_{lb}, bond efficiency factor k_b

Annex C 1

Table C2.1: Design values of the bond strength $f_{bd,PIR}$ in N/mm² for hammer drilling, hollow drilling, compressed air drilling, diamond drilling and for good bond conditions

$$f_{bd,PIR} = k_b \bullet f_{bd}$$

f_{bd}: Design value of the bond strength in N/mm² considering the concrete strength classes and the rebar diameter according to EN 1992-1-1: 2004+AC:2010
(for all other bond conditions multiply the values by 0,7)

k_b: Bond efficiency factor according to table C1.2 and C1.3

Hammer drilling, hollow drilling and compressed air drilling

Rebar / rebar anchor FRA ϕ [mm]	**bond strength $f_{bd,PIR}$ [N/mm²]** Concrete strength class								
	C12/15	C16/20	C20/25	C25/30	C30/37	C35/45	C40/50	C45/55	C50/60
8 to 25	1,6	2,0	2,3	2,7	3,0	3,4	3,7	4,0	4,3
26 to 40									4,0

Diamond drilling

Rebar / rebar anchor FRA ϕ [mm]	**bond strength $f_{bd,PIR}$ [N/mm²]** Concrete strength class								
	C12/15	C16/20	C20/25	C25/30	C30/37	C35/45	C40/50	C45/55	C50/60
8 to 12	1,6	2,0	2,3	2,7	3,0	3,4	3,7	4,0	4,3
14 to 25								3,7	
26 to 40						3,0			

Minimum anchorage length and minimum lap length under seismic conditions

The minimum anchorage length $l_{b,min}$ and the minimum lap length $l_{o,min}$ according to EN 1992-1-1 shall be multiply by the relevant amplification factor $\alpha_{lb,seis}$ according to table C3.1.

Table C3.1: Amplification factor $\alpha_{lb,seis}$ related to concrete strength class and drilling method

Concrete strength class	Drilling method	Amplification factor $\alpha_{lb,seis}$
C16/20 to C50/60	Hammer drilling with standard drill bit	1,0
	Hammer drilling with hollow drill bit (fischer "FHD", Heller "Duster Expert"; Bosch „Speed Clean"; Hilti "TE-CD, TE-YD")	1,0
	Compressed air drilling	1,0

Table C3.2: Bond efficiency factor $k_{b,seis}$ for hammer drilling, hollow drilling and compressed air drilling

Hammer drilling, hollow drilling and compressed air drilling

Rebar ϕ [mm]	Bond efficiency factor $k_{b,seis}$							
	Concrete strength class							
	C16/20	C20/25	C25/30	C30/37	C35/45	C40/50	C45/55	C50/60
8 to 25	1,00							
26 to 40	1,00							0,93

Table C3.3: Design values of the bond strength $f_{bd,PIR,seis}$ in N/mm² for hammer drilling, hollow drilling and compressed air drilling **under seismic action** and for good bond conditions

Hammer drilling, hollow drilling and compressed air drilling

Rebar ϕ [mm]	bond strength $f_{bd,PIR,seis}$ [N/mm²]							
	Concrete strength class							
	C16/20	C20/25	C25/30	C30/37	C35/45	C40/50	C45/55	C50/60
8 to 25	2,0	2,3	2,7	3,0	3,4	3,7	4,0	4,3
26 to 40								4,0

Table C4.1: Essential characteristics of **tensile resistance** for **fischer rebar anchors FRA** under fire exposure

concrete strength classes C12/C15 to C50/60, according to EN 1992-4

fischer rebar anchor FRA				**M12**	**M16**	**M20**	**M24**
Stainless steel (FRA or FRA C)							
Characteristic tensile resistance	R30	$\sigma_{Rk,s,fi}$	[N/mm²]	30			
	R60			25			
	R90			20			
	R120			16			

Design value of the steel bearing capacity $\sigma_{Rd,s,fi}$ under fire exposure for fischer rebar anchor FRA

The design value of the steel bearing capacity $\sigma_{Rd,s,fi}$ under fire exposure has to be calculated by the following equation:

$\sigma_{Rd,s,fi} = \sigma_{Rk,s,fi} / \gamma_{M,fi}$

with:

$\sigma_{Rk,s,fi}$ Characteristic tensile resistance according to table C4.1

$\gamma_{M,fi}$ Partial factor according to EN 1992-1-2:2004+AC:2008

Design values of the bond strength $f_{bd,fi}$ under fire exposure for concrete strength classes C12/15 to C50/60 (all drilling methods)

The design value of the bond strength $f_{bd,fi}$ under fire exposure has to be calculated by the following equation:

$$f_{bd,fi} = k_{b,fi}(\theta) \cdot f_{bd} \cdot \frac{\gamma_c}{\gamma_{M,fi}}$$

If: $\theta > 46$ °C $\quad k_{b,fi}(\theta) = \frac{862{,}3 \cdot \theta^{-1{,}166}}{10} \leq 1.0$

If: $\theta > 284$ °C $\quad k_{b,fi}(\theta) = 0.0$

$f_{bd,fi}$	=	Design value of the bond strength in case of fire (in N/mm²)
(θ)	=	Temperature in °C
$k_{b,fi}(\theta)$	=	Reduction factor under fire exposure
f_{bd}	=	Design value of the bond strength in N/mm² in cold condition according to table C2.1 or C2.2 considering the concrete classes, the rebar diameter, the drilling method and the bond conditions according to EN 1992-1-1:2004+AC:2010
γ_C	=	Partial factor according to EN 1992-1-1:2004+AC:2010
$\gamma_{M,fi}$	=	Partial factor according to EN 1992-1-2:2004+AC:2008

For evidence under fire exposure the anchorage length shall be calculated according to EN 1992-1-1:2004+AC:2010 Equation 8.3 using the temperature-dependent ultimate bond strength $f_{bd,fi}$.
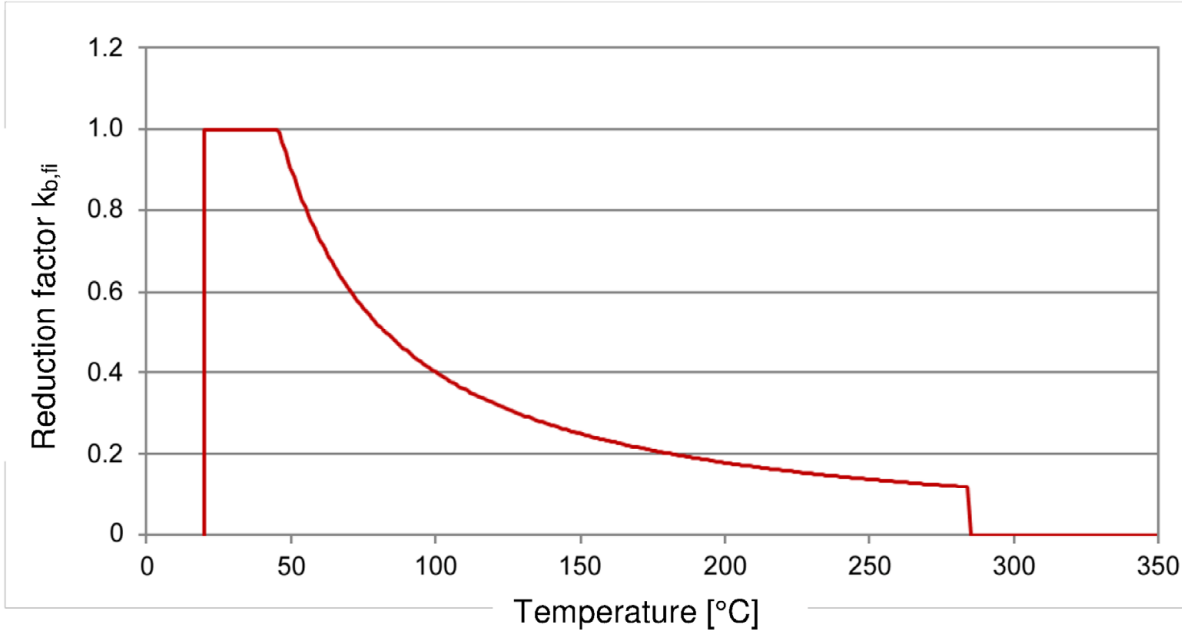
Figure C5.1: Example graph of reduction factor $k_{b,fi}(\theta)$ for concrete class C20/25 for good bond conditions