DECLARAÇÃO DE DESEMPENHO

DoP 0270

para ancoragem aircrete FPX_I (fixação metálica expansiva para uso em betão celular autoclavado) PT

1. Código de identificação único do produto-tipo: **DoP 0270**

2. Utilização(ões) prevista(s): **Fixação pós-instalada para uso em lajes reforçadas fissuradas ou não fissuradas ou em unidades de alvenaria de betão celular autoclavado, ver anexoss, especialmente anexos B1 - B5.**

3. Fabricante: **fischerwerke GmbH & Co. KG, Klaus-Fischer-Str. 1, 72178 Waldachtal, Alemanha**

4. Representante autorizado: **–**

5. Sistema(s) de avaliação e verificação da regularidade do desempenho (AVCP): **1**

6. Documento de Avaliação Europeu: **EAD 330014-00-0601**
   Avaliação Técnica Europeia: **ETA-12/0456; 2019-07-19**
   Organismo de Avaliação Técnica: **DIBt- Deutsches Institut für Bautechnik**
   Organismo(s) notificado(s): **2873 TU Darmstadt**

7. Desempenho(s) declarado(s):
   Resistência mecânica e estabilidade (BWR 1)
   Resistência para cargas em qualquer direção sem braço de alavanca: Anexo C1
   Resistência ao corte com braço de alavanca: Anexo C1
   espaçamento, distância ao bordo, espessura do substrato: Anexos B3, B4, C1
   Deslocamentos: Anexo C2
   Durabilidade: Anexo B1

   Segurança em caso de incêndio (BWR 2)
   Reação ao fogo: Classe A1
   Resistência ao fogo para cargas em qualquer direção sem braço de alavanca: Anexo C2
   Resistência ao fogo ao corte com braço de alavanca: NPD
   espaçamento, distância ao bordo para resistência ao fogo: Anexo C2

8. Documentação Técnica Adequada e/ou Documentação Técnica Específica: **–**

O desempenho do produto identificado acima está em conformidade com o conjunto de desempenhos declarados. A presente declaração de desempenho é emitida, em conformidade com o Regulamento (UE) n.o 305/2011, sob a exclusiva responsabilidade do fabricante identificado acima.

Assinado por e em nome do fabricante por:

Dr.-Ing. Oliver Geibig, Diretor Administrativo de Unidades de Negócios e Engenharia

Jürgen Grün, Diretor Administrativo de Química e Qualidade

Tumlingen, 2021-01-15

Este DoP foi preparado em diferentes línguas. Em caso de litígio sobre a interpretação, a versão em inglês prevalecerá sempre.

O Anexo inclui informações voluntárias e complementares em inglês que excedem os requisitos legais (linguisticamente especificados).

Specific Part

1 Technical description of the product

The fischer aircrete anchor FPX-I is a deformation controlled expansion anchor made of galvanised steel. The anchor consists of an internal threaded socket, a cone bolt and an expansion sleeve. The anchor transfers loads into autoclaved aerated concrete via mechanical interlock.

The anchor is set into a predrilled bore hole and anchored with a hexagon installation tool until the installation tool is pushed out of the internal hexagon socket. The fixture is installed with a screw-in part (threaded rods or screw).

The product description is given in Annex A.

2 Specification of the intended use in accordance with the applicable European assessment Document

The performances given in Section 3 are only valid if the anchor is used in compliance with the specifications and conditions given in Annex B.

The verifications and assessment methods on which this European Technical Assessment is based lead to the assumption of a working life of the anchor of at least 50 years. The indications given on the working life cannot be interpreted as a guarantee given by the producer, but are to be regarded only as a means for choosing the right products in relation to the expected economically reasonable working life of the works.

3 Performance of the product and references to the methods used for its assessment

3.1 Mechanical resistance and stability (BWR 1)

Essential characteristic	Performance
Resistance in any load direction without lever arm	See Annex C 1
Resistance in any load direction with lever arm	See Annex C 1
Spacing, edge distance, member thickness	See Annex B 3 and B 4
Displacements	See Annex C 2
Durability	Durability is ensured if the specifications of intended use according to Annex B are taken into account.

3.2 Safety in case of fire (BWR 2)

Essential characteristic	Performance
Reaction to fire	Class A1
Resistance to fire	See Annex C 2

4 Assessment and verification of constancy of performance (AVCP) system applied, with reference to its legal base

In accordance with European Assessment Document EAD No. 330014-00-0601, the applicable European legal act is: [96/582/EC].

The system(s) to be applied is (are): 1

Product description

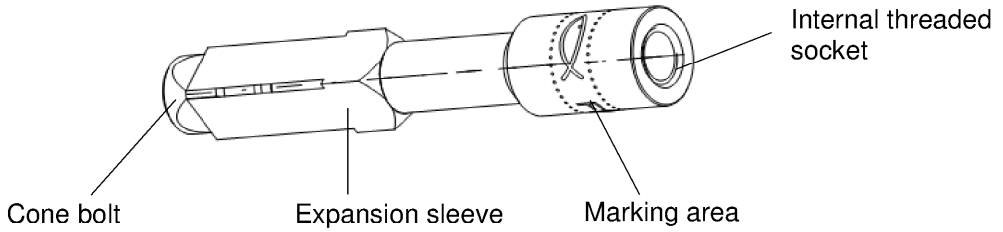

Product installed

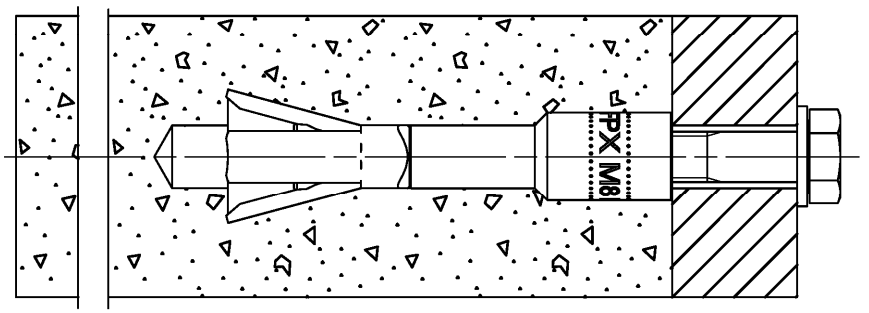

Product label

Product label, example: FPX-I M8

Brand | type of fastener

Thread size / identification

Product dimensions

Table A1.1: Dimension [mm]

Anchor type			**FPX-I**			
Internal thread			M6	M8	M10	M12
Anchor length	L	=	75			
Diameter head internal threaded socket	Ø D	=	14			16
Diameter cone bolt	Ø d_c	=	11			

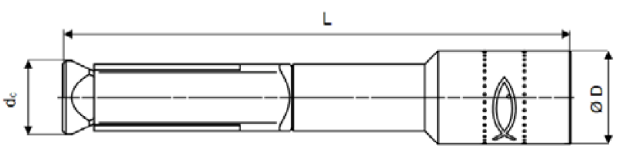

fischer aircrete anchor FPX-I

Product description
Description, label and dimension

Annex A 1

Specifications of intended use

fischer aircrete anchor FPX-I	M6	M8	M10	M12
Galvanized steel	✓	✓	✓	✓
Static and quasi-static loads	✓	✓	✓	✓
Cracked and uncracked Autoclaved Aerated Concrete (AAC)	✓	✓	✓	✓
Fire exposure in reinforced slabs according to EN 12602:2016 of strength class $f_{AAC} \geq 3{,}3$ N/mm² with dry density $\rho_m \geq 0{,}50$ kg/dm³ and strength class $f_{AAC} \geq 4{,}4$ N/mm² with dry density $\rho_m \geq 0{,}55$ kg/dm³	✓	✓	✓	✓

Base material:

- Cracked reinforced slabs (uncracked slabs are included) according to EN 12602:2016 of
  strength class $f_{AAC} \geq 3{,}3$ N/mm² with dry density $\rho_m \geq 0{,}50$ kg/dm³ and
  strength class $f_{AAC} \geq 4{,}4$ N/mm² with dry density $\rho_m \geq 0{,}55$ kg/dm³
- Uncracked reinforced slabs according to EN 12602:2016 of
  strength class $f_{AAC} \geq 1{,}6$ N/mm² with dry density $\rho_m \geq 0{,}25$ kg/dm³ and
  strength class $f_{AAC} \geq 6{,}0$ N/mm² with dry density $\rho_m \geq 0{,}65$ kg/dm³
- Masonry units according to EN 771-4:2011+A1:2015 of
  strength class $f_{AAC} \geq 1{,}6$ N/mm² with dry density $\rho_m \geq 0{,}25$ kg/dm³ and
  strength class $f_{AAC} \geq 6{,}0$ N/mm² with dry density $\rho_m \geq 0{,}65$ kg/dm³
- The mortar strength class of the masonry has to be M 2,5 according to EN 998-2:2017 at minimum

Use conditions (Environmental conditions):

- Structures subject to dry internal conditions (FPX-I)

Design:

- Anchorages are to be designed under the responsibility of an engineer experienced in anchorages and concrete and masonry work
- Verifiable calculation notes and drawings are to be prepared taking account in the loads to be anchored. The position of the anchor is to be indicated on the design drawings
- Design of fastenings according to TR 054, Design Method B.

Table B1.1: Material

Designation	**FPX-I**
Cone bolt [1)]	Steel EN 10263:2018
Expansion sleeve [1)]	Steel EN 10277:2018
Internal threaded bolt [1)]	Steel EN 10277:2018
Screw-in-parts [1, 2)]	Minimum steel strength class 4.8, DIN EN ISO 898-1:2013

[1)] Galvanized according to EN ISO 4042:2018, ≥ 5 µm
[2)] Screw-in parts (screws and threaded rods including nuts and washer) must comply with the specification in Annex C1.

Table B2.1: Installation parameters

Size					FPX-I M6	FPX-I M8	FPX-I M10	FPX-I M12
Nominal drill hole diameter		d_0	=		10			
Maximum drill bit diameter		d_{cut}	≤		10,45			
Depth of drill hole to deepest point	with cleaning [1]	h_1	≥	[mm]	80			
	without cleaning				95			
Diameter of clearance hole in the fixture		d_f	≤		7	9	12	14
Effective embedment depth		h_{ef}	=		70			
Maximum fastening torque [2]		T_{max}		[Nm]	3			
Screw-in depth internal thread		$l_{s,min}$		[mm]	6	8	10	12
		$l_{s,max}$			15			

[1] For member thickness h < 120 mm the drill hole shall be cleaned and the depth of the drill hole shall be reduced to 80 mm in order to avoid damage on the opposite side of the wall

[2] If the anchor cannot retain against the fixture no installation torque may be applied (T_{max} = 0 Nm)

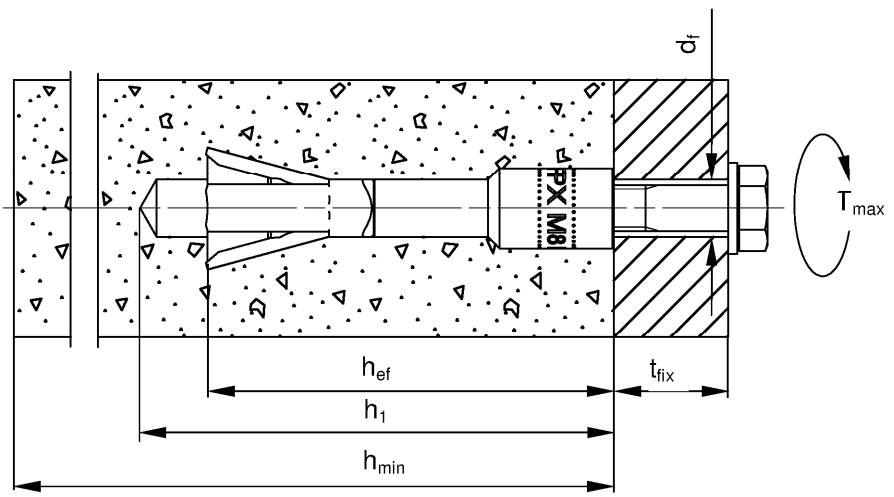

h_{ef} = Effective embedment depth
t_{fix} = Thickness of fixture
h_1 = Depth of drill hole to deepest point
h_{min} = Minimum thickness of AAC member
T_{max} = Maximum setting torque
d_f = Diameter of clearance hole in the fixture

Table B3.1: Minimum member thickness, minimum spacing and edge distance in AAC - **slabs**

Size				FPX-I			
				M6	M8	M10	M12
Minimum thickness of AAC - **slab**	with cleaning [1]	h_{min}	[mm]	100			
	without cleaning			120			
Minimum spacing		s_{min}		100			
Minimum edge distance	single anchor [2]	c_1		125 [5]			
	anchor groups [3]			250			
Minimum edge distance, orthogonal to c_1		c_2		1,5 x c_1			
Minimum spacing between	single anchors	a		600			
	anchors groups [3] [4]			750			

[1] For member thickness h < 120 mm the drill dust has to be cleaned out of the hole and the depth of the drill hole has to be reduced to 80 mm in order to avoid damage on the opposite side of the slab
[2] Maximum 2 single anchors in the same formation as anchor groups. For 2 single anchors with spacing smaller than 600 mm (s_{min} ≥ 100 mm) the same spacing in between and edge distances (a; c_1) like for the anchor group are valid
[3] For exclusive tension loads the spacing and edge distances for groups can be reduced to the spacing and edge distances of single anchors
[4] If there is no (free) edge, or the edge distance is ≥ a, the spacing between anchor groups can be reduced to the spacing between single anchors
[5] The edge distance of reinforced slabs with a width ≤ 700 mm has to be ≥ 150 mm

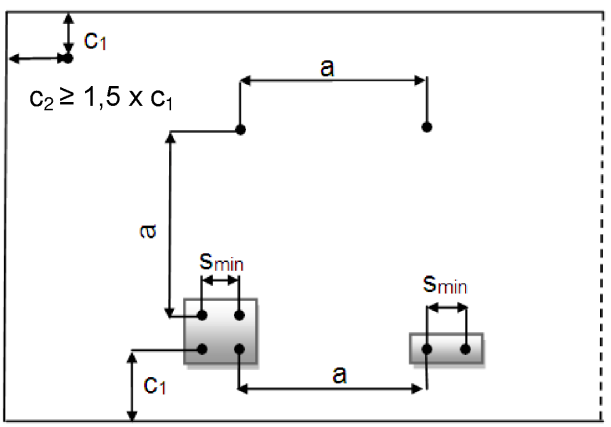

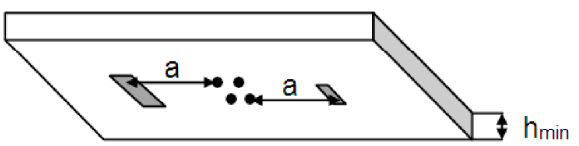

fischer aircrete anchor FPX-I

Intended use
Minimum member thickness, minimum spacing and edge distance in AAC slabs

Annex B 3

Table B4.1: Minimum member thickness, minimum spacing and edge distance in AAC - **masonry**

Size				FPX-I M6	FPX-I M8	FPX-I M10	FPX-I M12
Minimum thickness of AAC - **masonry**	with cleaning [1]	h_{min}	[mm]	100			
	without cleaning			120			
Minimum spacing		s_{min}		100			
Minimum distance to non-filled joints, single anchor		c_F		0 [5] / 75 [6] / 125 [7]			
Minimum edge distance	single anchor [2]	c_1		125			
	anchor groups [3]			250			
Minimum edge distance, orthogonal to c_1		c_2		1,5 x c_1			
Minimum spacing between	single anchors [2]	a		375			
	anchors groups [3] [4]			750			

[1] For member thickness h < 120 mm, the drill hole shall be cleaned and the depth of the drill hole shall be reduced to 80 mm in order to avoid damage on the opposite side of the wall
[2] Maximum 2 single anchors in the same formation as the anchor groups. For 2 single anchors with spacing smaller than 375 mm (s_{min} ≥ 100 mm) the same spacing in between and edge distances (a; c_1) like for the anchor group are valid
[3] For exclusive tension loads the spacing and edge distances of anchor groups can be reduced to the spacing and edge distances of single anchors
[4] If there is no edge, or the edge distance is ≥ a, the spacing between anchor groups can be reduced to the spacing between single anchors
[5] For joints completely filled with mortar and a joint width ≤ 12 mm and a compressive strength according to EN 998-2 ≥ f_{AAC} AAC no distances to joints are required
[6] c_F for only tension and /or shear loads parallel to the joints which are not filled with mortar and a joint width ≤ 2 mm
[7] c_F = c_1 for shear load or with a part of the load orthogonal to the joint which are not filled with mortar and a joint width ≥ 0 mm

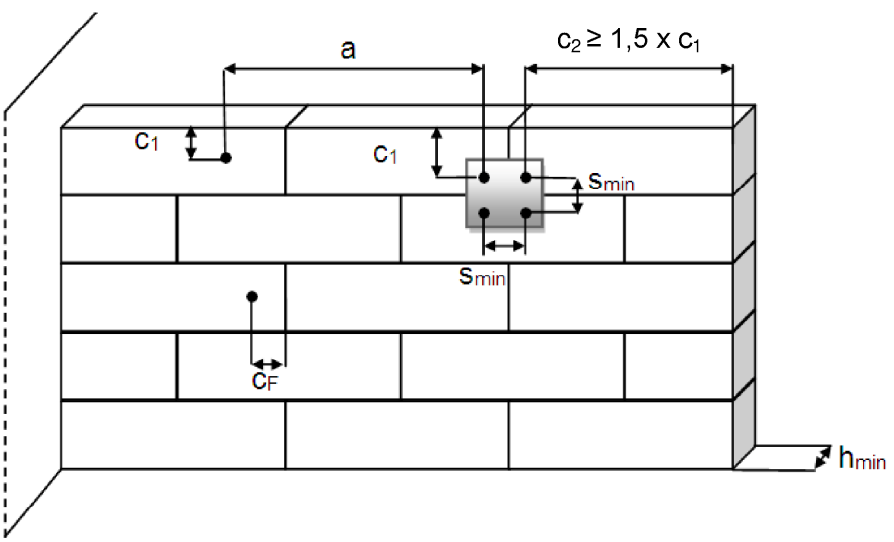

fischer aircrete anchor FPX-I

Intended use
Minimum member thickness, minimum spacing and edge distance in AAC masonry

Annex B 4

Installation instruction

- Anchor installation carried out by appropriately qualified personnel and under the supervision of the person responsible for technical matters of the site
- Use of the anchor only as supplied by the manufacturer without exchanging the components of the anchor
- Checking before placing the anchor to ensure that the strength class of the aircrete in which the anchor is to be placed is in the range given and is not lower than that of the aircrete to which the characteristic loads apply
- Drill hole created perpendicular +/- 5° to AAC surface, positioning without damaging the reinforcement
- In case of aborted hole: New drilling at a minimum distance away of twice the depth of the aborted hole or smaller distance if the aborted hole is filled with non-shrinkage, high strength mortar (pressure strength ≥ 30 N/mm^2) and if under shear or oblique tension load it is not the direction of the load application

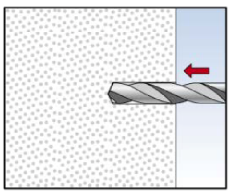	1: Drill the hole. Other methods like punching, to make the hole, are allowed. When the AAC is covered with a hard layer like tiles, the tile has to be drilled with minimum diameter of the head of the internal threaded bolt ø D
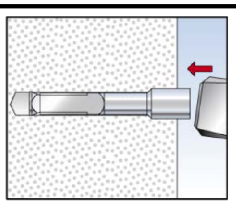	2: Set the fastener until it is flush with the surface of the AAC
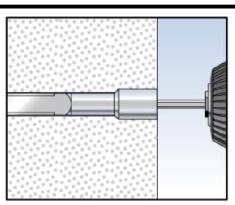	3: Turning the internal thread bolt with the hexagon (approximately 15 turnings are required) 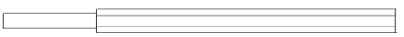 Setting tool for FPX-I M6 Setting tool for FPX-I M8 – M12
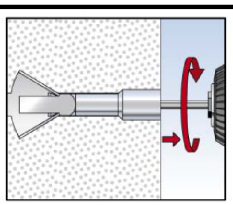	4: By turning the internal thread bolt, the cone is driven into the expansion sleeve. When the optimal expansion is reached, the hexagon is thrown out of the socket. **The turning of the internal thread bolt until the hexagon is thrown out of the socket is compulsory** if tightening is impossible the anchor cannot be loaded
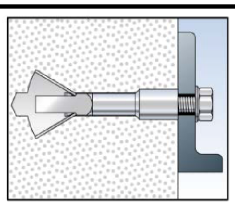	5a: Optional tightening the fastener with a torque T_{max} ≤ 3 Nm. The anchor could be pulled against the fixture depending on the compressive strength of the AAC.
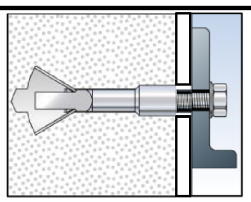	5b: If the anchor cannot support against the fixture (with cover layer) no installation torque may be applied (T_{max} = 0)

Table C1.1: Characteristic resistance for all load directions

Size			FPX-I M6	FPX-I M8	FPX-I M10	FPX-I M12
Single anchor in AAC - slabs [1]						
Characteristic resistance in cracked AAC - slabs	F_{Rk} [kN]	$f_{AAC} \geq 3{,}3$, $\rho_m \geq 0{,}50$	1,5			
		$f_{AAC} \geq 4{,}4$, $\rho_m \geq 0{,}55$	2,0			
Characteristic resistance in uncracked AAC - slabs		$f_{AAC} \geq 3{,}3$, $\rho_m \geq 0{,}50$	2,0			
		$f_{AAC} \geq 4{,}4$, $\rho_m \geq 0{,}55$	3,0			
Partial safety factor for AAC - slabs		γ_{MAAC} [2]	1,73			
Single anchor in AAC - masonry [1]						
Characteristic resistance in AAC - masonry [3] Intermediate values by linear interpolation	F_{Rk} [kN]	$f_{AAC} \geq 1{,}6$, $\rho_m \geq 0{,}25$	0,9			
		$f_{AAC} \geq 2{,}0$, $\rho_m \geq 0{,}35$	1,2			
		$f_{AAC} \geq 4{,}0$, $\rho_m \geq 0{,}50$	2,5			
		$f_{AAC} \geq 6{,}0$, $\rho_m \geq 0{,}65$	4,0			
Partial safety factor for AAC - masonry		γ_{MAAC} [2]	2,0			
Single anchor in AAC - slabs and AAC - masonry [1]						
Characteristic bending resistance with lever arm in combination with screw / threaded rod complying with:	ISO 898-1: 2013	$M_{Rk,s}$ [Nm] 4.8	6	15	30	52
		5.8	8	19	37	65
		6.8	9	23	44	78
		8.8	12	30	60	105
Partial safety factor for steel failure		γ_{Ms}	1,25			
Anchor groups in cracked and uncracked AAC - slabs and AAC - masonry with n = 2 to n = 4 anchors [3]						
Characteristic resistance for n = 2, n = 4 [4] $s_{min} \geq 100$ mm, $c_1 \geq 250$ mm [5]	$F_{Rk,n}$ [kN]		2 x F_{Rk}			
Characteristic resistance for n ≥ 3 $s_{min} \geq 140$ mm, $c_{min,\ anchor\ group} \geq 700$ mm [5]			n x F_{Rk}			
Characteristic resistance redundancy when the joints are not visible [5]	$F_{Rk,n,Redundancy}$		0,5 x $F_{Rk,n}$			
Partial safety factor for AAC - slabs		γ_{MAAC} [2]	1,73			
Partial safety factor for AAC - masonry		γ_{MAAC} [2]	2,0			

[1] Maximum 2 single anchors in the same formation as the anchor groups. For 2 single anchors with spacing smaller than a ($s_{min} \geq 100$ mm) the characteristic resistance of the anchor group is decisive
[2] The installation safety factor $\gamma_2 = 1{,}0$ is included
[3] The evaluation of $N_{Rk,pb}$ according to TR 054, Section 4.2.1.5 is necessary. The smaller value of $N_{Rk,pb}$ and F_{Rk} is decisive
[4] Rectangular arrangement according to drawing Annex B3 and B4
[5] Only for multiple use according to EAD 330747-00-0601

The characteristic strength class f_{AAC} [N/mm²] and the characteristic dry density ρ_m [kg/dm³] have to comply with EN 771-4:2011+A1:2015 for AAC - masonry and EN 12602:2016 for AAC - slabs

Table C2.1: Characteristic resistance for each anchor under fire exposure for all load directions

Size				FPX-I M6	FPX-I M8	FPX-I M10	FPX-I M12
Characteristic resistance for cracked **slabs** of strength class $f_{AAC} \geq 3{,}3$, $\rho_m \geq 0{,}50$	$F_{Rk,fi}$	R30	[kN]	0,4			
		R60		0,4			
		R90		0,3		0,4	
		R120		0,3			
Characteristic resistance for cracked **slabs** of strength class $f_{AAC} \geq 4{,}4$, $\rho_m \geq 0{,}55$	$F_{Rk,fi}$	R30	[kN]	0,5			
		R60		0,4		0,5	
		R90		0,3		0,5	
		R120		0,3		0,4	
Minimum spacing	$s_{min,fi}$		[mm]	100			
Minimum edge distance	$c_{min,fi}$		[mm]	$c_{min,fi}$ = 140 for fire exposure from more than one side $c_{min,fi} \geq 300$ mm			

It must be ensured that local spalling of the autoclaved aerated concrete cover does not occur.

Table C2.2: Displacement under tension loads, shear loads and oblique loads in AAC [1)]

Size			FPX-I M6	FPX-I M8	FPX-I M10	FPX-I M12
Displacement tension load in **cracked** AAC for all AAC strength classes	δ_{N0}	[mm]	1,0			
	$\delta_{N\infty}$		2,0			
Displacement tension load in **uncracked** AAC for all AAC strength classes	δ_{N0}	[mm]	1,0			
	$\delta_{N\infty}$		1,0			
Displacement shear load in **cracked and uncracked** AAC $f_{AAC} = 1{,}6 - \rho_m \geq 0{,}25$ [2)]	δ_{V0}	[mm]	2,5			
	$\delta_{V\infty}$		3,7			
Displacement shear load in **cracked and uncracked** AAC $f_{AAC} \geq 6{,}0 - \rho_m \geq 0{,}65$ [2)]	δ_{V0}	[mm]	5,0			
	$\delta_{V\infty}$		7,3			

[1)] Displacement at service load level $F_{Rk} / (\gamma_{MAAC} \times 1{,}4)$
[2)] Intermediate values by linear interpolation, taking in account the AAC strength