# DECLARAÇÃO DE DESEMPENHO

## DoP 0173

para sistema de injeção fischer FIS EM Plus (Âncoras metálicas para utilização em betão) PT

1. Código de identificação único do produto-tipo: **DoP 0173**

2. Utilização(ões) prevista(s): **Fixação pós-instalada.em betão fissurado ou não fissurado.**
**Ver anexoss, especialmente anexos B1- B13**

3. Fabricante: **fischerwerke GmbH & Co. KG, Otto-Hahn-Straße 15, 79211 Denzlingen, Alemanha**

4. Representante autorizado: **–**

5. Sistema(s) de avaliação e verificação da regularidade do desempenho (AVCP): **1**

6. Documento de Avaliação Europeu: **EAD 330499-01-0601**
Avaliação Técnica Europeia: **ETA-17/0979; 2019-07-22**
Organismo de Avaliação Técnica: **DIBt- Deutsches Institut für Bautechnik**
Organismo(s) notificado(s): **1343 MPA Darmstadt**

7. Desempenho(s) declarado(s):

**Resistência mecânica e estabilidade (BWR 1)**

| | | | |
|---|---|---|---|
| Caracteristicas de resistência à tração (para acção estática e quase-estática): | Resistência à rotura do aço: | Anexos C1- C3 | |
| | Resistência à rotura combinada por arranque e cone de betão: | Anexos C5- C12 | $\psi^0_{sus}$= NPD |
| | Resistência à rotura por cone de betão: | Anexos C4 | |
| | Distância ao bordo para prevenir rotura por fendilhação: | Anexos C4 | |
| | Robustez: | Anexo C4 | |
| | Torque de instalação máximo: | Anexos B3, B6- B8 | |
| | Distância mínima ao bordo e espaçamento: | Anexos B3- B8 | |
| Caracteristicas de resistência ao corte (para acção estática e quase-estática): | Resistência à rotura do aço: | Anexos C1- C3 | |
| | Resistência do betão ao destacamento: | Anexo C4 | |
| | Resistência do bordo do betão: | Anexo C4 | |
| Resistência característica e Deslocamentos para as categorias de performance sísmica C1 e C2: | Resistência à tração, deslocamentos, categoria C1: | Anexos C15- C16, C17 | |
| | Resistência à tração, deslocamentos, categoria C2: | Anexos C15, C16, C18 | |
| | Resistência ao corte, deslocamentos, categoria C1: | Anexos C15- C16, C17 | |
| | Resistência ao corte, deslocamentos, categoria C2: | Anexos C15, C16, C18 | |
| | Factor espaço anular: | NPD | |
| Deslocamentos sob carregamento de curto e longo prazo: | Deslocamentos sob carregamento de curto e longo prazo: | Anexos C13, C14 | |

**Higiene, saúde e meio ambiente (BWR 3)**

| | |
|---|---|
| Conteúdo, emissão e / ou liberação de substâncias perigosas: | NPA |

8. Documentação Técnica Adequada e/ou Documentação Técnica Específica: –

O desempenho do produto identificado acima está em conformidade com o conjunto de desempenhos declarados. A presente declaração de desempenho é emitida, em conformidade com o Regulamento (UE) n.o 305/2011, sob a exclusiva responsabilidade do fabricante identificado acima.

Assinado por e em nome do fabricante por:

ppa. Thilo Pregartner

i.V. P. Schillinger

Thilo Pregartner, Dr.-Ing.

Peter Schillinger, Dipl.-Ing.

Tumlingen, 2019-08-01

Este DoP foi preparado em diferentes línguas. Em caso de litígio sobre a interpretação, a versão em inglês prevalecerá sempre.

O Anexo inclui informações voluntárias e complementares em inglês que excedem os requisitos legais (linguisticamente especificados).

**Specific Part**

## 1 Technical description of the product

The "fischer injection system FIS EM Plus" is a bonded fastener consisting of a cartridge with injection mortar fischer FIS EM Plus and a steel element according to Annex A5.

The steel element is placed into a drilled hole filled with injection mortar and is anchored via the bond between metal part, injection mortar and concrete.

The product description is given in Annex A.

## 2 Specification of the intended use in accordance with the applicable European Assessment Document

The performances given in Section 3 are only valid if the anchor is used in compliance with the specifications and conditions given in Annex B.

The verifications and assessment methods on which this European Technical Assessment is based lead to the assumption of a working life of the anchor of at least 50 or 100 years. The indications given on the working life cannot be interpreted as a guarantee given by the producer, but are to be regarded only as a means for choosing the right products in relation to the expected economically reasonable working life of the works.

## 3 Performance of the product and references to the methods used for its assessment

### 3.1 Mechanical resistance and stability (BWR 1)

| Essential characteristic | Performance |
|---|---|
| Characteristic resistance for static and quasi-static tension load | See Annex C 1 to C 12 |
| Characteristic resistance for static and quasi-static shear load | See Annex C 1 to C 4 |
| Displacements for static and quasi-static loads | See Annex C 13 to C 14 |
| Characteristic resistance for seismic performance categories C1 and C2 | See Annex C 15 to C 18 |
| Durability | See Annex B 2 |

### 3.2 Hygiene, health and the environment (BWR 3)

| Essential characteristic | Performance |
|---|---|
| Content, emission and/or release of dangerous substances | No performance assessed |

## 4 Assessment and verification of constancy of performance (AVCP) system applied, with reference to its legal base

In accordance with EAD 330499-01-0601 according to Article 66 Paragraph 3 of Regulation (EU) No 305/2011 the applicable European legal act is: [96/582/EC].

The system to be applied is: 1

## Installation conditions part 1

**fischer anchor rod**

**Pre-positioned installation**

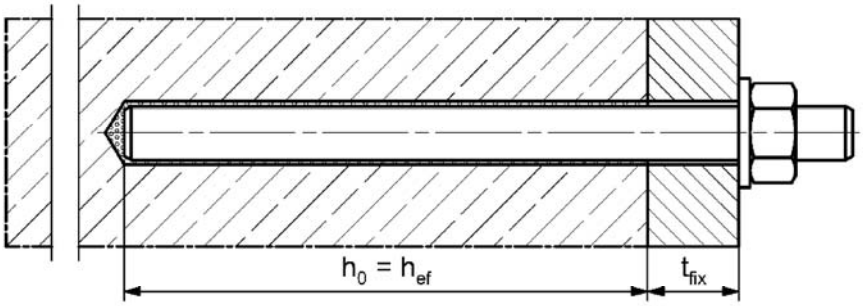


**Push through installation** (annular gap filled with mortar)

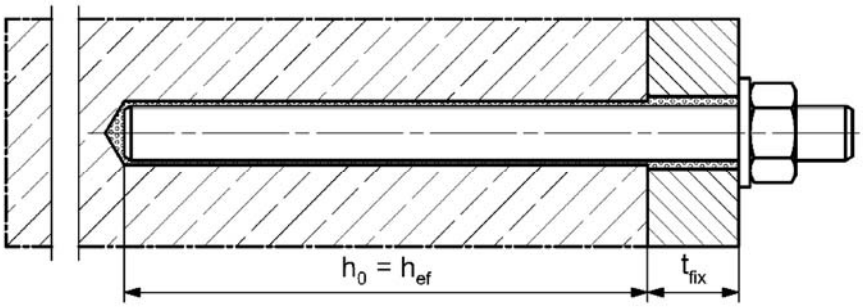


**Pre-positioned or push through installation with subsequently injected filling disk**
(annular gap filled with mortar)

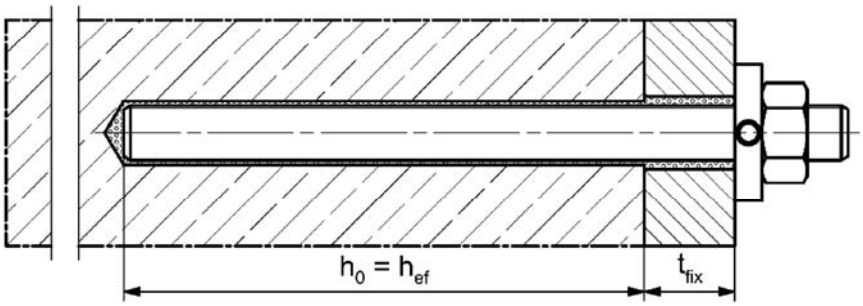


Figures not to scale

$h_0$ = drill hole depth

$h_{ef}$ = effective embedment depth

$t_{fix}$ = thickness of fixture

fischer injection system FIS EM Plus

**Product description**
Installation conditions part 1

**Annex A 1**

## Installation conditions part 2

**fischer internal threaded anchor RG MI**

**Pre-positioned installation**

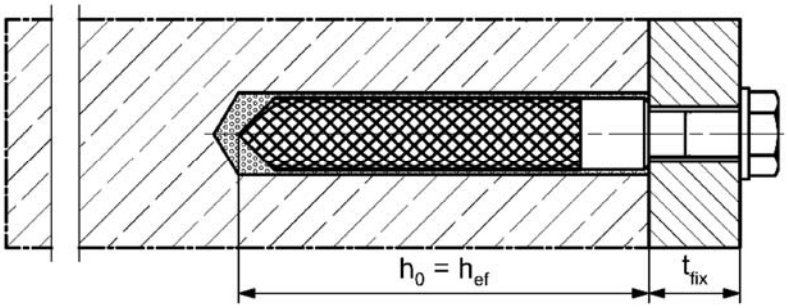


**Pre-positioned installation with subsequently injected filling disk** (annular gap filled with mortar)

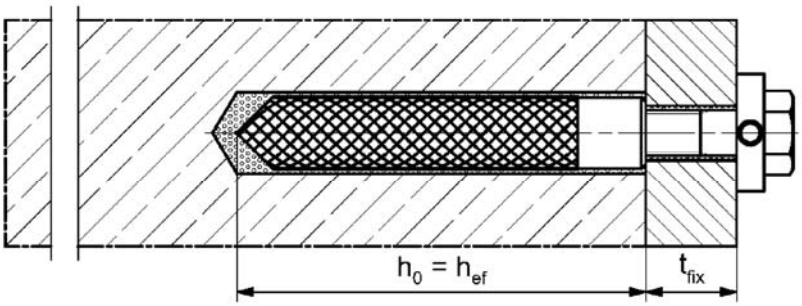


Figures not to scale

$h_0$ = drill hole depth

$h_{ef}$ = effective embedment depth

$t_{fix}$ = thickness of fixture

fischer injection system FIS EM Plus

**Product description**
Installation conditions part 2

**Annex A 2**

## Installation conditions part 3

**Reinforcing bar**

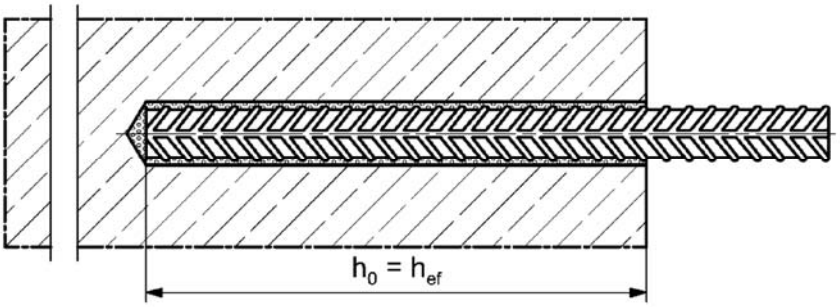


**fischer rebar anchor FRA**

**Pre-positioned installation**

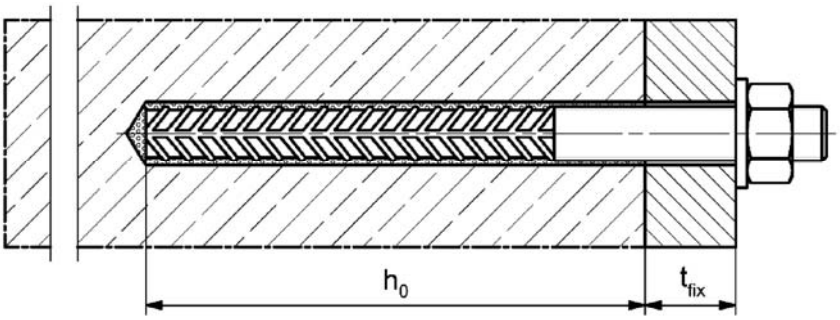


**Push through installation** (annular gap filled with mortar)

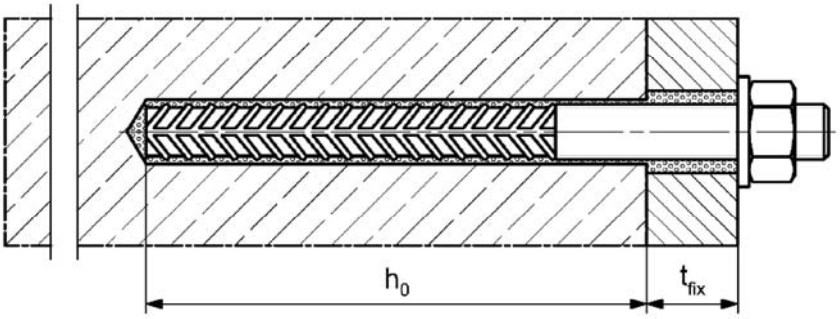


Figures not to scale

$h_0$ = drill hole depth

$h_{ef}$ = effective embedment depth

$t_{fix}$ = thickness of fixture

fischer injection system FIS EM Plus

**Product description**
Installation conditions part 3

**Annex A 3**

## Overview system components part 1

**Injection cartridge (shuttle cartridge) with sealing cap; Size: 390 ml, 585 ml, 1100 ml, 1500 ml**

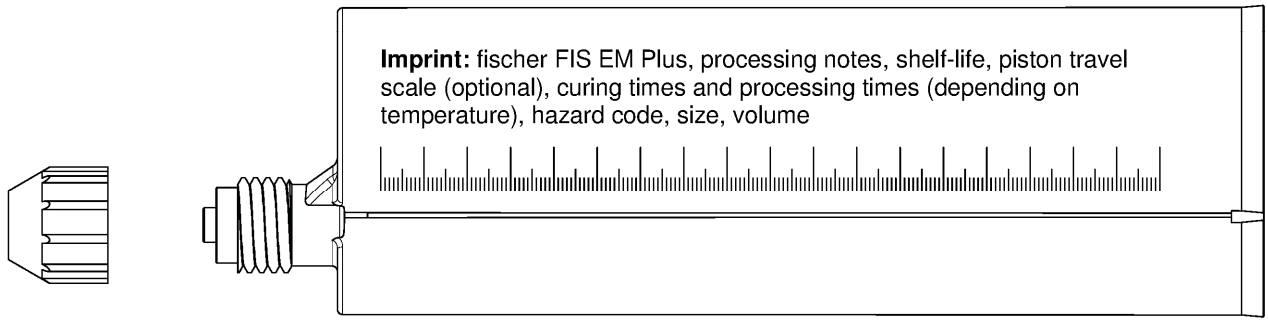


**Static mixer FIS MR Plus or UMR**

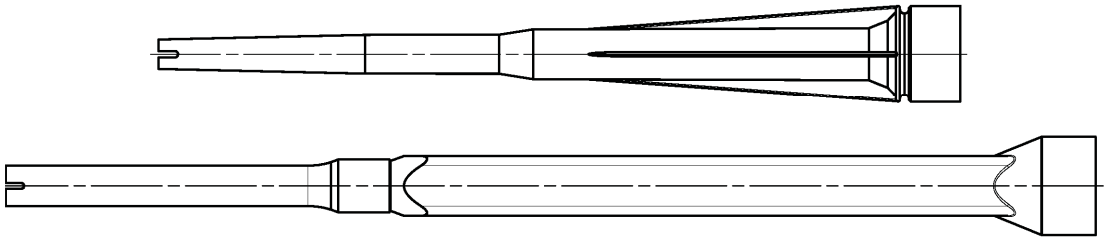

**Injection adapter and Extension tube for static mixer**

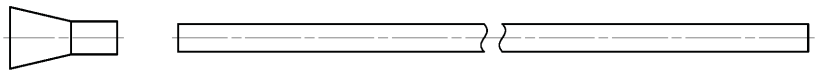

**Cleaning brush BS / BSB**

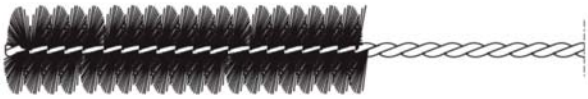

**Blow-out pump ABP**

Figures not to scale

| | |
|---|---|
| fischer injection system FIS EM Plus | **Annex A 4** |
| **System description**<br>Overview system components part 1;<br>cartridges / static mixer / accessories | |

## Overview system components part 2

**fischer anchor rod**

Size: M8, M10, M12, M14, M16, M20, M22, M24, M27, M30

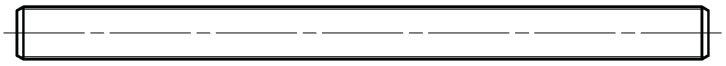

**fischer internal threaded anchor RG MI**

Size: M8, M10, M12, M16, M20

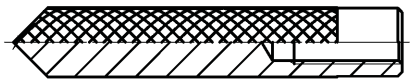

**Screw / threaded rod / washer / hexagon nut**

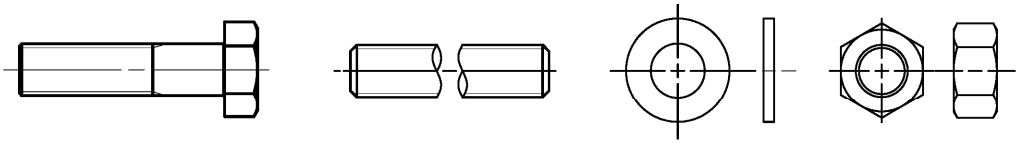

**fischer filling disk FFD with injection adapter**

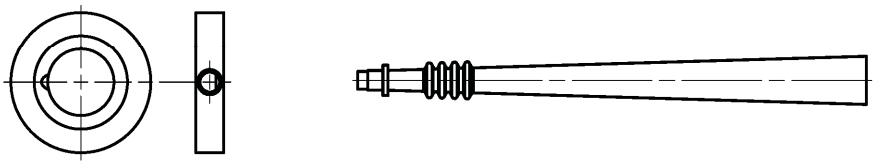

**Reinforcing bar**

Nominal diameter: ϕ8, ϕ10, ϕ12, ϕ14, ϕ16, ϕ18, ϕ20, ϕ22, ϕ24, ϕ25, ϕ26, ϕ28, ϕ30, ϕ32, ϕ34, ϕ36, ϕ40

**fischer rebar anchor FRA**

Size: M12, M16, M20, M24

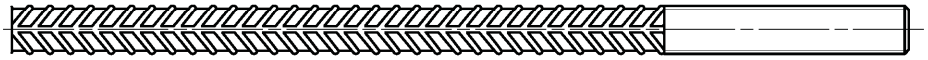

Figures not to scale

| | |
|---|---|
| fischer injection system FIS EM Plus | **Annex A 5** |
| **System description**<br>Overview system components part 2;<br>steel components | |

**Table A6.1:** Materials

| Part | Designation | Material | | |
|---|---|---|---|---|
| 1 | Injection cartridge | Mortar, hardener, filler | | |
| | Steel grade | Steel, zinc plated | Stainless steel A4 [1] | High corrosion resistant steel C [2] |
| 2 | Anchor rod | Property class 5.8 or 8.8; EN ISO 898-1:2013 zinc plated ≥ 5 µm, EN ISO 4042:1999 A2K or hot-dip galvanized ≥ 40 µm EN ISO 10684:2004 $f_{uk}$ ≤ 1000 N/mm² $A_5$ > 12% fracture elongation | Property class 50, 70 or 80 EN ISO 3506-1:2009 1.4401; 1.4404; 1.4578; 1.4571; 1.4439; 1.4362; 1.4062, 1.4662, 1.4462; EN 10088-1:2014[1] $f_{uk}$ ≤ 1000 N/mm² $A_5$ > 12% fracture elongation | Property class 50 or 80 EN ISO 3506-1:2009 or property class 70 with $f_{yk}$= 560 N/mm² 1.4565; 1.4529; EN 10088-1:2014 $f_{uk}$ ≤ 1000 N/mm² $A_5$ > 12% fracture elongation |
| | | Fracture elongation $A_5$ > 8 %, for applications without requirements for seismic performance category C2 | | |
| 3 | Washer ISO 7089:2000 | zinc plated ≥ 5 µm, EN ISO 4042:1999 A2K or hot-dip galvanised ≥ 40 µm EN ISO 10684:2004 | 1.4401; 1.4404; 1.4578;1.4571; 1.4439; 1.4362; EN 10088-1:2014 | 1.4565; 1.4529; EN 10088-1:2014 |
| 4 | Hexagon nut | Property class 5 or 8; EN ISO 898-2:2012 zinc plated ≥ 5 µm, ISO 4042:1999 A2K or hot-dip galvanised ≥ 40 µm EN ISO 10684:2004 | Property class 50, 70 or 80 EN ISO 3506-1:2009 1.4401; 1.4404; 1.4578; 1.4571; 1.4439; 1.4362; EN 10088-1:2014 | Property class 50, 70 or 80 EN ISO 3506-1:2009 1.4565; 1.4529 EN 10088-1:2014 |
| 5 | fischer internal threaded anchor RG MI | Property class 5.8 ISO 898-1:2013 zinc plated ≥ 5 µm, ISO 4042:1999 A2K | Property class 70 EN ISO 3506-1:2009 1.4401; 1.4404; 1.4578; 1.4571; 1.4439; 1.4362; EN 10088-1:2014 | Property class 70 EN ISO 3506-1:2009 1.4565; 1.4529; EN 10088-1:2014 |
| 6 | Commercial standard screw or anchor / threaded rod for fischer internal threaded anchor RG MI | Property class 5.8 or 8.8; EN ISO 898-1:2013 zinc plated ≥ 5 µm, ISO 4042:1999 A2K $A_5$ > 8 % fracture elongation | Property class 70 EN ISO 3506-1:2009 1.4401; 1.4404; 1.4578; 1.4571; 1.4439; 1.4362; EN 10088-1:2014[1] $A_5$ > 8 % fracture elongation | Property class 70 EN ISO 3506-1:2009 1.4565; 1.4529; EN 10088-1:2014 $A_5$ > 8 % fracture elongation |
| 7 | fischer filling disk FFD similar to DIN 6319-G | zinc plated ≥ 5 µm, EN ISO 4042:1999 A2K or hot-dip galvanised ≥ 40 µm EN ISO 10684:2004 | 1.4401; 1.4404; 1.4578; 1.4571; 1.4439; 1.4362; EN 10088-1:2014 | 1.4565;1.4529; EN 10088-1:2014 |
| 8 | Reinforcing bar EN 1992-1-1:2004 and AC:2010, Annex C | Bars and de-coiled rods, class B or C with $f_{yk}$ and k according to NDP or NCL of EN 1992-1-1:2004+AC:2010 $f_{uk} = f_{tk} = k \cdot f_{yk}$ | | |
| 9 | fischer rebar anchor FRA | Rebar part: Bars and de-coiled rods class B or C with $f_{yk}$ and k according to NDP or NCL of EN 1992-1-1:2004+AC:2010 $f_{uk} = f_{tk} = k \cdot f_{yk}$ | Threaded part: Property class 70 or 80 EN ISO 3506-1:2009 1.4401, 1.4404, 1.4571, 1.4578, 1.4439, 1.4362, 1.4062 EN 10088-1:2014 [1] 1.4565; 1.4529 EN 10088-1:2014 [2] | |

[1] acc. to EN 10088-1:2014 Corrosion resistance class CRC III acc. to EN 1993-1-4:2015
[2] acc. to EN 10088-1:2014 Corrosion resistance class CRC V acc. to EN 1993-1-4:2015

**Specifications of intended use (part 1)**

**Table B1.1:** Overview use and performance categories

| Anchorages subject to | | | FIS EM Plus with … | | | | | | | |
|---|---|---|---|---|---|---|---|---|---|---|
| | | | Anchor rod | | fischer internal threaded anchor RG MI | | Reinforcing bar | | fischer rebar anchor FRA | |
| Hammer drilling with standard drill bit | | | all sizes | | | | | | | |
| Hammer drilling with hollow drill bit (fischer "FHD", Heller "Duster Expert"; Bosch „Speed Clean"; Hilti "TE-CD, TE-YD") | | | Nominal drill bit diameter ($d_0$) 12 mm to 35 mm | | | | | | | |
| Diamond drilling | | | all sizes | | | | | | | |
| Static and quasi static load, in | uncracked concrete | | all sizes | Tables: C1.1 C4.1 C5.1 C6.1 C13.1 | all sizes | Tables: C2.1 C4.1 C7.1 C8.1 C13.2 | all sizes | Tables: C3.1 C4.1 C9.1 C10.1 C14.1 | all sizes | Tables: C3.2 C4.1 C11.1 C12.1 C14.2 |
| | cracked concrete | | | | | | | | | |
| Seismic performance category (only hammer drilling with standard / hollow drill bits) | C1 | | M10 to M30 | Tables: C15.1 C16.2 C17.1 | - | | ϕ10 to ϕ32 | Tables: C16.1 C16.2 C17.2 | - | |
| | C2 | | M12 M16 M20 M24 | Tables: C15.1 C16.2 C18.1 | | | - | - | | |
| Use category | I1 | dry or wet concrete | all sizes | | | | | | | |
| | I2 | water filled hole | all sizes (not permitted in combined with service life time 100 years) | | | | | | | |
| Installation direction | | | D3 (downward and horizontal and upwards (e.g. overhead) installation) | | | | | | | |
| Installation temperature | | | $T_{i,min}$ = -5 °C to $T_{i,max}$ = +40 °C | | | | | | | |
| In-service temperature | Temperature range I | | -40 °C to +60 °C | (max. short term temperature +60 °C ; max. long term temperature +35 °C) | | | | | | |
| | Temperature range II | | -40 °C to +72 °C | (max. short term temperature +72 °C ; max. long term temperature +50 °C) | | | | | | |

fischer injection system FIS EM Plus

**Intended use**
Specifications (part 1)

**Annex B 1**

## Specifications of intended use (part 2)

**Base materials:**

- Compacted reinforced or unreinforced normal weight concrete without fibres of strength classes C20/25 to C50/60 according to EN 206:2013+A1:2016

**Use conditions (Environmental conditions):**

- Structures subject to dry internal conditions
  (zinc coated steel, stainless steel or high corrosion resistant steel).
- For all other conditions according to EN1993-1-4:2015 corresponding to corrosion resistance classes to Annex A 6 table 6.1.

**Design:**

- Anchorages have to be designed by a responsible engineer with experience of concrete anchor design.
- Verifiable calculation notes and drawings are to be prepared taking account of the loads to be anchored. The position of the anchor is indicated on the design drawings (e. g. position of the anchor relative to reinforcement or to supports, etc.).
- Anchorages are designed in accordance with:
  EN 1992-4:2018 and EOTA Technical Report TR 055.
  Anchorages shall be positioned outside of critical regions (e.g. plastic hinges) of the concrete structure.
  Fastening in stand-off installation or with a grout layer under seismic action are not covered in this European Technical Assessment (ETA).

**Installation:**

- Anchor installation is to be carried out by appropriately qualified personnel and under the supervision of the person responsible for technical matters of the site
- In case of aborted hole: The hole shall be filled with mortar
- Anchorage depth should be marked and adhered to on installation
- Overhead installation is allowed

**Table B3.1:** Installation parameters for anchor rods

| Anchor rods | | | Thread | M8 | M10 | M12 | M14 | M16 | M20 | M22 | M24 | M27 | M30 |
|---|---|---|---|---|---|---|---|---|---|---|---|---|---|
| Width across flats | | SW | [mm] | 13 | 17 | 19 | 22 | 24 | 30 | 32 | 36 | 41 | 46 |
| Nominal drill hole diameter | | $d_0$ | [mm] | 10 | 12 | 14 | 16 | 18 | 22<br>24[1)] | 25 | 28 | 30 | 35 |
| Drill hole depth | | $h_0$ | [mm] | $h_0 = h_{ef}$ | | | | | | | | | |
| Effective embedment depth | | $h_{ef,\,min}$ | [mm] | 60 | 60 | 70 | 75 | 80 | 90 | 93 | 96 | 108 | 120 |
| | | $h_{ef,\,max}$ | [mm] | 160 | 200 | 240 | 280 | 320 | 400 | 440 | 480 | 540 | 600 |
| Diameter of the clearance hole of the fixture | pre-positioned installation | $d_f$ | [mm] | 9 | 12 | 14 | 16 | 18 | 22 | 24 | 26 | 30 | 33 |
| | push through installation | $d_f$ | [mm] | 12 | 14 | 16 | 18 | 20 | 26 | 28 | 30 | 33 | 40 |
| Minimum thickness of concrete member | | $h_{min}$ | [mm] | $h_{ef} + 30$ (≥ 100) | | | $h_{ef} + 2d_0$ | | | | | | |
| Maximum torque moment for attachment of the fixture | | max $T_{fix}$ | [Nm] | 10 | 20 | 40 | 50 | 60 | 120 | 135 | 150 | 200 | 300 |

[1)] Both drill hole diameters can be used

**fischer anchor rod**

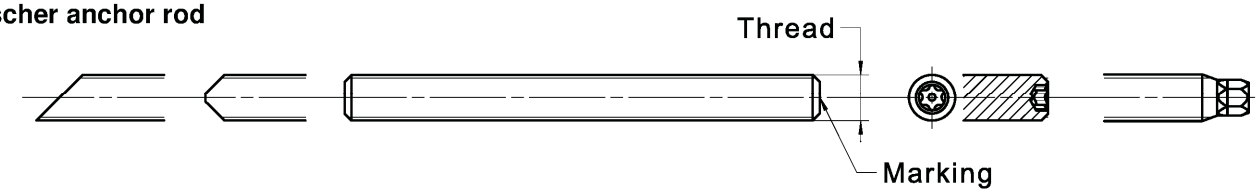


**Marking (on random place) fischer anchor rod:**

Property class 8.8, stainless steel, property class 80 and high corrosion resistant steel, property class 80: •
Stainless steel A4, property class 50 and high corrosion resistant steel, property class 50: ••
Alternatively: Colour coding according to DIN 976-1

**Installation conditions:**

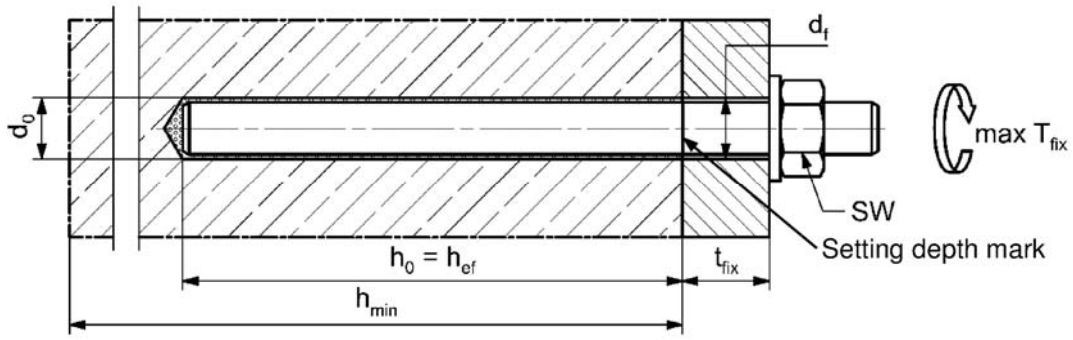


**Commercial standard threaded rods, washers and hexagon nuts may also be used if the following requirements are fulfilled**

- Materials, dimensions and mechanical properties according to Annex A 6, Table A6.1
- Inspection certificate 3.1 according to EN 10204:2004, the documents have to be stored
- Setting depth is marked

Figures not to scale

**Table B4.1:** Minimum spacing and minimum edge distance for anchor rods and reinforcing bars

| **Anchor rods** | | | **M8** | **M10** | **M12** | **M14** | **M16** | **-** | **M20** | **M22** | **M24** |
|---|---|---|---|---|---|---|---|---|---|---|---|
| **Reinforcing bars (nominal diameter)** | | **ϕ** | **8** | **10** | **12** | **14** | **16** | **18** | **20** | **22** | **24** |
| **Minimum edge distance** | | | | | | | | | | | |
| Uncracked / cracked concrete | $c_{min}$ | [mm] | 40 | 45 | 45 | 45 | 50 | 55 | 55 | 55 | 60 |
| Minimum spacing | $s_{min}$ | | according to Annex B5 | | | | | | | | |
| **Minimum spacing** | | | | | | | | | | | |
| Uncracked / cracked concrete | $s_{min}$ | [mm] | 40 | 45 | 55 | 60 | 65 | 85 | 85 | 95 | 105 |
| Minimum edge distance | $c_{min}$ | | according to Annex B5 | | | | | | | | |
| **Required projecting area** | | | | | | | | | | | |
| Uncracked concrete | $A_{sp,req}$ | [1000 mm²] | 8 | 13 | 22 | 23 | 24 | 38,5 | 38,5 | 39,5 | 40 |
| Cracked concrete | $A_{sp,req}$ | [1000 mm²] | 6,5 | 10 | 16,5 | 17,5 | 18,5 | 29,5 | 29,5 | 30 | 30,5 |

| **Anchor rods** | | | **-** | **-** | **M27** | **-** | **M30** | **-** | **-** | **-** | **-** |
|---|---|---|---|---|---|---|---|---|---|---|---|
| **Reinforcing bars (nominal diameter)** | | **ϕ** | **25** | **26** | **-** | **28** | **30** | **32** | **34** | **36** | **40** |
| **Minimum edge distance** | | | | | | | | | | | |
| Uncracked / cracked concrete | $c_{min}$ | [mm] | 75 | 75 | 75 | 80 | 80 | 120 | 120 | 135 | 175 |
| Minimum spacing | $s_{min}$ | | according to Annex B5 | | | | | | | | |
| **Minimum spacing** | | | | | | | | | | | |
| Uncracked / cracked concrete | $s_{min}$ | [mm] | 120 | 120 | 120 | 140 | 140 | 160 | 160 | 160 | 160 |
| Minimum edge distance | $c_{min}$ | | according to Annex B5 | | | | | | | | |
| **Required projecting area** | | | | | | | | | | | |
| Uncracked concrete | $A_{sp,req}$ | [1000 mm²] | 47,5 | 47,5 | 47,5 | 64 | 64 | 64 | 64 | 64 | 64 |
| Cracked concrete | $A_{sp,req}$ | [1000 mm²] | 36,5 | 36,5 | 36,5 | 49 | 49 | 49 | 49 | 49 | 49 |

**Splitting failure** for minimum edge distance and spacing in dependence of the effective embedment depth $h_{ef}$.

For the calculation of minimum spacing and minimum edge distance of anchors in combination with different embedment depths and thicknesses of concrete members the following equation shall be fulfilled:

$$\mathbf{A_{sp,req} < A_{sp,t}}$$

$A_{sp,req}$ = required projecting area
$A_{sp,t}$ = $A_{sp,ef}$ = effective projecting area (according to Annex B5)

**Table B5.1:** Effective projecting area $A_{sp,t}$ with concrete member thickness $h > h_{ef} + 1{,}5 \cdot c$ and $h \geq h_{min}$

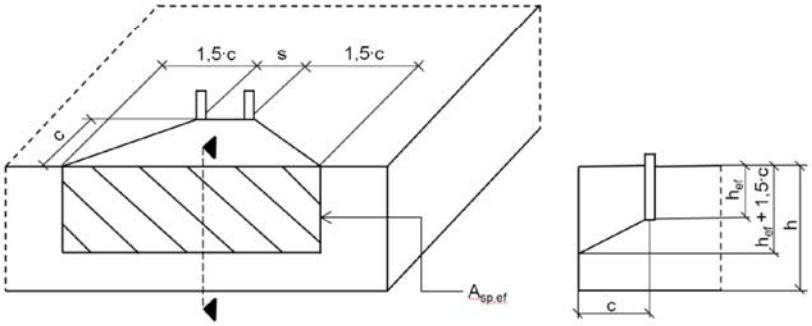


| | | | |
|---|---|---|---|
| Single anchor | $A_{sp,t} = (3 \cdot c) \cdot (h_{ef} + 1{,}5 \cdot c)$ | [mm²] | with $c \geq c_{min}$ |
| Group of anchors with $s > 3 \cdot c$ | $A_{sp,t} = (6 \cdot c) \cdot (h_{ef} + 1{,}5 \cdot c)$ | [mm²] | |
| Group of anchors with $s \leq 3 \cdot c$ | $A_{sp,t} = (3 \cdot c + s) \cdot (h_{ef} + 1{,}5 \cdot c)$ | [mm²] | with $c \geq c_{min}$ and $s \geq s_{min}$ |

**Table B5.2:** Effektive projecting area $A_{sp,t}$ with concrete member thickness $h \leq h_{ef} + 1{,}5 \cdot c$ and $h \geq h_{min}$

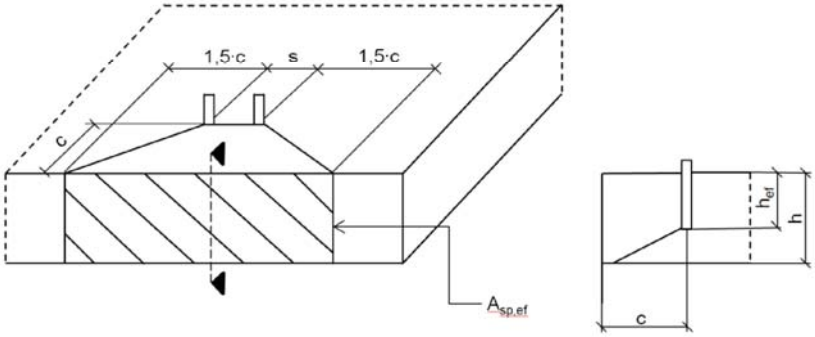


| | | | |
|---|---|---|---|
| Single anchor | $A_{sp,t} = 3 \cdot c \cdot$ existing h | [mm²] | with $c \geq c_{min}$ |
| Group of anchors with $s > 3 \cdot c$ | $A_{sp,t} = 6 \cdot c \cdot$ existing h | [mm²] | |
| Group of anchors with $s \leq 3 \cdot c$ | $A_{sp,t} = (3 \cdot c + s) \cdot$ existing h | [mm²] | with $c \geq c_{min}$ and $s \geq s_{min}$ |

Edge distance and axial spacing shall be rounded up to at least 5 mm

Figures not to scale

fischer injection system FIS EM Plus

**Intended use**
Minimum thickness of concrete member for anchor rods, minimum spacing and edge distance

**Annex B 5**

**Table B6.1:** Installation parameters plus minimum spacing and minimum edge distance for fischer internal threaded anchors RG MI

| Internal threaded anchors RG MI | | Thread | M8 | M10 | M12 | M16 | M20 |
|---|---|---|---|---|---|---|---|
| Diameter of anchor | $d_{nom} = d_H$ | | 12 | 16 | 18 | 22 | 28 |
| Nominal drill hole diameter | $d_0$ | | 14 | 18 | 20 | 24 | 32 |
| Drill hole depth | $h_0$ | | $h_0 = h_{ef} = L_H$ | | | | |
| Effective embedment depth ($h_{ef} = L_H$) | $h_{ef}$ | | 90 | 90 | 125 | 160 | 200 |
| Minimum spacing and minimum edge distance | $s_{min}$ = $c_{min}$ | [mm] | 55 | 65 | 75 | 95 | 125 |
| Diameter of clearance hole in the fixture | $d_f$ | | 9 | 12 | 14 | 18 | 22 |
| Minimum thickness of concrete member | $h_{min}$ | | 120 | 125 | 165 | 205 | 260 |
| Maximum screw-in depth | $l_{E,max}$ | | 18 | 23 | 26 | 35 | 45 |
| Minimum screw-in depth | $l_{E,min}$ | | 8 | 10 | 12 | 16 | 20 |
| Maximum torque moment for attachment of the fixture | max $T_{fix}$ | [Nm] | 10 | 20 | 40 | 80 | 120 |

**fischer internal threaded anchor RG MI**

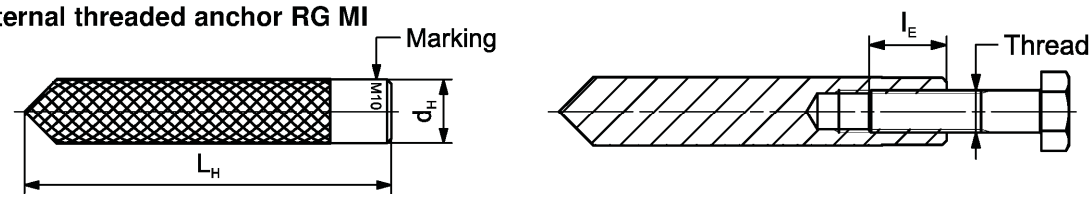


**Marking:** Anchor size e. g.: **M10**
Stainless steel → additional **A4**; e.g.: **M10 A4**
High corrosion resistant steel → additional C; e.g.: **M10 C**

Retaining bolt or threaded rods (including nut and washer) must comply with the appropriate material and strength class of Annex A 6, Table A6.1

**Installation conditions:**

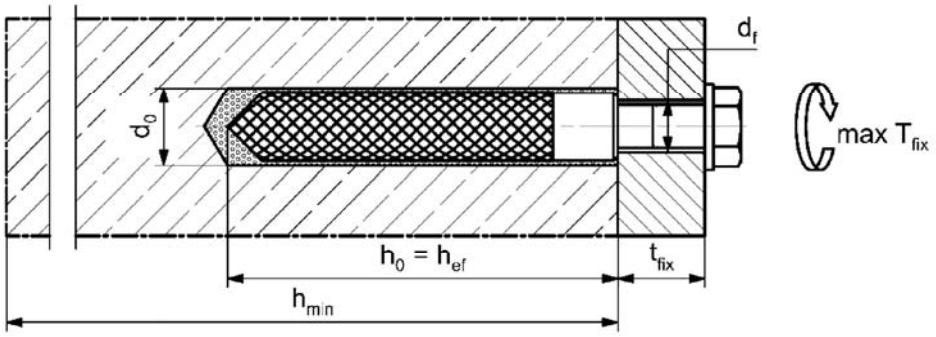


Figures not to scale

fischer injection system FIS EM Plus

**Intended use**
Installation parameters internal threaded anchors RG MI

**Annex B 6**

**Table B7.1:** Installation parameters for reinforcing bars

| **Nominal diameter of the bar** | | **ϕ** | **8[1)]** | **10[1)]** | **12[1)]** | **14** | **16** | **18** | **20** | **22** | **24** |
|---|---|---|---|---|---|---|---|---|---|---|---|
| Nominal drill hole diameter | $d_0$ | [mm] | 10 / 12 | 12 / 14 | 14 / 16 | 18 | 20 | 25 | 25 | 30 | 30 |
| Drill hole depth | $h_0$ | [mm] | $h_0 = h_{ef}$ | | | | | | | | |
| Effective embedment depth | $h_{ef,min}$ | [mm] | 60 | 60 | 70 | 75 | 80 | 85 | 90 | 94 | 98 |
| | $h_{ef,max}$ | [mm] | 160 | 200 | 240 | 280 | 320 | 360 | 400 | 440 | 480 |
| Minimum thickness of concrete member | $h_{min}$ | [mm] | $h_{ef}$ + 30 (≥ 100) | | $h_{ef} + 2d_0$ | | | | | | |

| **Nominal diameter of the bar** | | **ϕ** | **25** | **26** | **28** | **30** | **32** | **34** | **36** | **40** | **-** |
|---|---|---|---|---|---|---|---|---|---|---|---|
| Nominal drill hole diameter | $d_0$ | [mm] | 30 | 35 | 35 | 40 | 40 | 40 | 45 | 55 | - |
| Drill hole depth | $h_0$ | [mm] | $h_0 = h_{ef}$ | | | | | | | | |
| Effective embedment depth | $h_{ef,min}$ | [mm] | 100 | 104 | 112 | 120 | 128 | 136 | 144 | 160 | - |
| | $h_{ef,max}$ | [mm] | 500 | 520 | 560 | 600 | 640 | 680 | 720 | 800 | - |
| Minimum thickness of concrete member | $h_{min}$ | [mm] | $h_{ef} + 2d_0$ | | | | | | | | |

[1)] Both drill hole diameters can be used

**Reinforcing bar**

- The minimum value of related rib area $f_{R,min}$ must fulfil the requirements of EN 1992-1-1:2004+AC:2010
- The rib height must be within the range: $0{,}05 \cdot \phi \leq h_{rib} \leq 0{,}07 \cdot \phi$
  ($\phi$ = Nominal diameter of the bar , $h_{rib}$ = rib height)

**Installation conditions:**

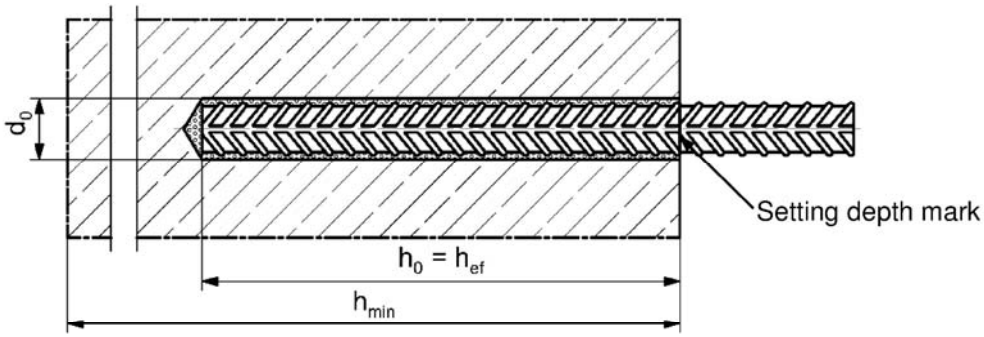


Figures not to scale

fischer injection system FIS EM Plus

**Intended use**
Installation parameters reinforcing bars

**Annex B 7**

**Table B8.1:** Installation parameters plus minimum spacing and minimum edge distance for fischer rebar anchor FRA

| Rebar anchor FRA | | Thread | M12[1)] | | M16 | M20 | M24 |
|---|---|---|---|---|---|---|---|
| Nominal diameter of the bar | $\phi$ | [mm] | 12 | | 16 | 20 | 25 |
| Width across flats | SW | [mm] | 19 | | 24 | 30 | 36 |
| Nominal drill hole diameter | $d_0$ | [mm] | 14 | 16 | 20 | 25 | 30 |
| Drill hole depth | $h_0$ | [mm] | $h_{ef} + l_e$ | | | | |
| Effective embedment depth | $h_{ef,min}$ | [mm] | 70 | | 80 | 90 | 96 |
| | $h_{ef,max}$ | [mm] | 140 | | 220 | 300 | 380 |
| Distance concrete surface to welded joint | $l_e$ | [mm] | 100 | | | | |
| Minimum spacing and minimum edge distance | $s_{min}$ = $c_{min}$ | [mm] | 55 | | 65 | 85 | 105 |
| Diameter of clearance hole in the fixture – pre-positioned anchorage | $\leq d_f$ | [mm] | 14 | | 18 | 22 | 26 |
| Diameter of clearance hole in the fixture – push through anchorage | $\leq d_f$ | [mm] | 18 | | 22 | 26 | 32 |
| Minimum thickness of concrete member | $h_{min}$ | [mm] | $h_0 + 30$ ($\geq 100$) | | $h_0 + 2d_0$ | | |
| Maximum torque moment for attachment of the fixture | max $T_{fix}$ | [Nm] | 40 | | 60 | 120 | 150 |

[1)] Both drill hole diameters can be used

**fischer rebar anchor FRA**

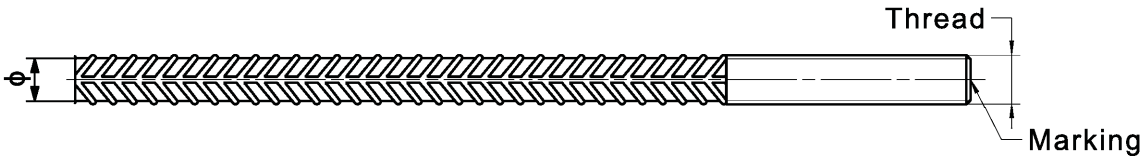


Marking frontal e. g: FRA (for stainless steel); FRA C (for high corrosion resistant steel)

**Installation conditions:**

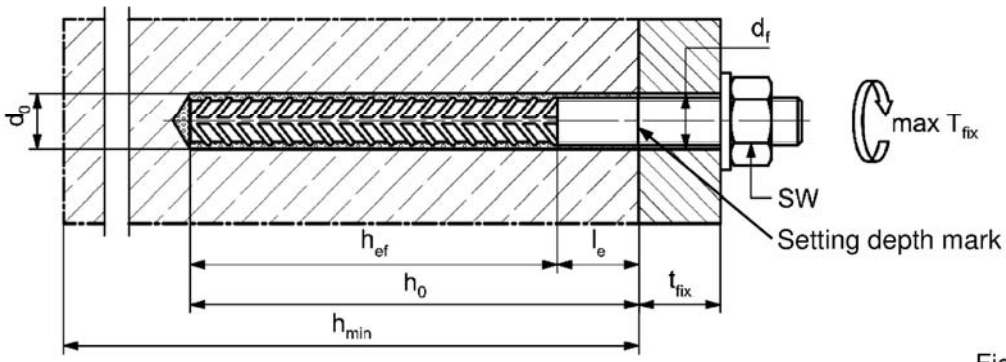


Figures not to scale

fischer injection system FIS EM Plus

**Intended use**
Installation parameters rebar anchor FRA

**Annex B 8**

**Table B9.1:** Parameters of the cleaning brush BS / BSB (steel brush)

The size of the cleaning brush refers to the drill hole diameter

| | | | | | | | | | | | | | | | | | |
|---|---|---|---|---|---|---|---|---|---|---|---|---|---|---|---|---|---|
| Nominal drill hole diameter | $d_0$ | [mm] | 10 | 12 | 14 | 16 | 18 | 20 | 24 | 25 | 28 | 30 | 32 | 35 | 40 | 45 | 55 |
| Steel brush diameter | $d_b$ | | 11 | 14 | 16 | 20 | | 25 | 26 | 27 | 30 | 40 | | | 42 | 47 | 58 |

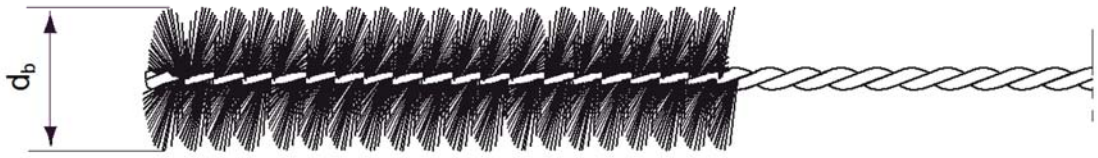


**Table B9.2** Maximum processing time of the mortar and minimum curing time (During the curing time of the mortar the concrete temperature may not fall below the listed minimum temperature)

| Temperature at anchoring base [°C] | Maximum processing time $t_{work}$ | Minimum curing time $t_{cure}$ |
|---|---|---|
| -5 to -1 | 240 min | 200 h |
| ±0 to +4 | 150 min | 90 h |
| +5 to +9 | 120 min | 40 h |
| +10 to +19 | 30 min | 18 h |
| +20 to +29 | 14 min | 10 h |
| +30 to +40 | 7 min | 5 h |

[1)] In wet concrete or water filled holes the curing times must be doubled

## Installation instructions part 1

### Drilling and cleaning the hole (hammer drilling with standard drill bit)

| | | |
|---|---|---|
| 1 | 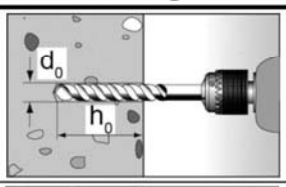 | Drill the hole.<br>Nominal drill hole diameter $\mathbf{d_0}$ and drill hole depth $\mathbf{h_0}$<br>see **tables B3.1, B6.1, B7.1, B8.1** |
| 2 | 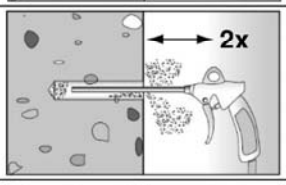 | Cleaning the drill hole:<br>Blow out the drill hole twice, with oil free compressed air (p ≥ 6 bar) |
| 3 | 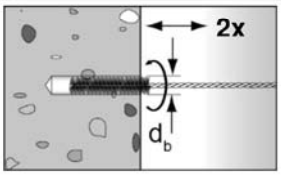 | Brush the drill hole twice. For drill hole diameter ≥ 30 mm use a power drill.<br>For deep holes use an extension. Corresponding brushes see **table B9.1** |
| 4 | 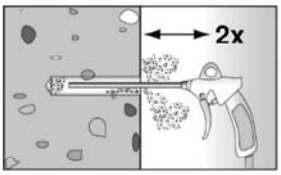 | Cleaning the drill hole:<br>Blow out the drill hole twice, with oil free compressed air (p ≥ 6 bar) |

Go to step 6

### Drilling and cleaning the hole (hammer drilling with hollow drill bit)

| | | |
|---|---|---|
| 1 | | Check a suitable hollow drill (see **table B1.1**)<br>for correct operation of the dust extraction |
| 2 | 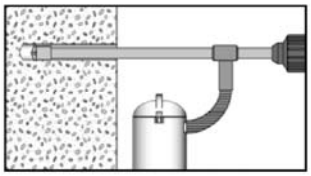 | Use a suitable dust extraction system, e. g.<br>Bosch GAS 35 M AFC or a comparable dust extraction system with equivalent performance data<br><br>Drill the hole with hollow drill bit. The dust extraction system has to extract the drill dust nonstop during the drilling process and must be adjusted to maximum power. Nominal drill hole diameter $\mathbf{d_0}$ and drill hole depth $\mathbf{h_0}$<br>see **tables B3.1, B6.1, B7.1, B8.1** |

Go to step 6

**Installation instructions part 2**

Drilling and cleaning the hole (wet drilling with diamond drill bit)

| | | | | |
|---|---|---|---|---|
| 1 | 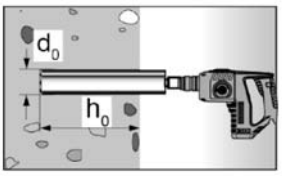  | Drill the hole.<br>Drill hole diameter $\mathbf{d_0}$ and nominal drill hole depth $\mathbf{h_0}$ see **tables B3.1, B6.1, B7.1, B8.1** | 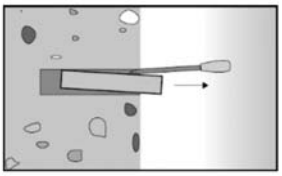 | Break the drill core and remove it |
| 2 | 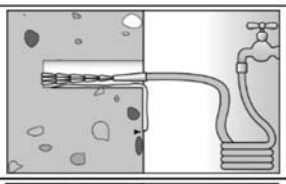 | Flush the drill hole with clean water until it flows clear | | |
| 3 | 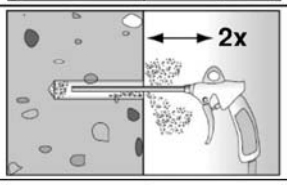  | Blow out the drill hole twice, using oil-free compressed air (p > 6 bar) | | |
| 4 | 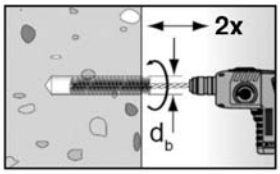  | Brush the drill hole twice using a power drill.<br>Corresponding brushes see **table B9.1** | | |
| 5 | 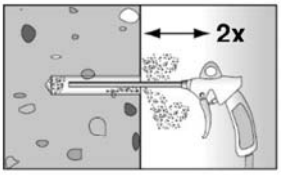  | Blow out the drill hole twice, using oil-free compressed air (p > 6 bar) | | |

Preparing the cartridge

| | | | |
|---|---|---|---|
| 6 | 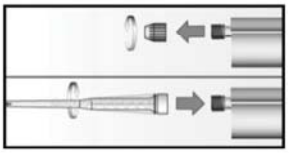 | Remove the sealing cap<br>Screw on the static mixer<br>(the spiral in the static mixer must be clearly visible) | |
| 7 | 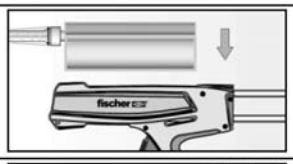 | 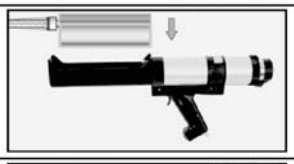 | Place the cartridge into the dispenser |
| 8 | | 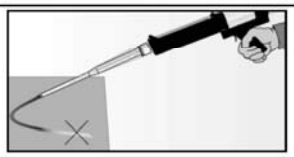 | Extrude approximately 10 cm of material out until the resin is evenly grey in colour. Do not use mortar that is not uniformly grey |

## Installation instructions part 3

### Injection of the mortar

**9**

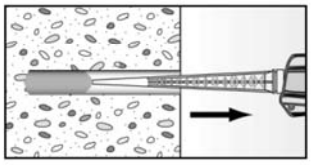

Fill approximately 2/3 of the drill hole with mortar. Always begin from the bottom of the hole and avoid bubbles

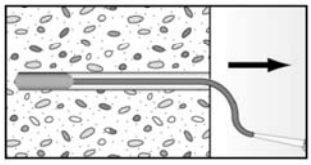

For drill hole depth ≥ 150 mm use an extension tube

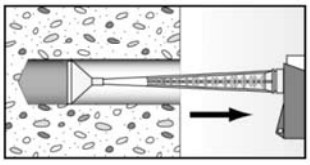

For overhead installation, deep holes ($h_0$ > 250 mm) or drill hole diameter ($d_0$ ≥ 40 mm) use an injection-adapter

### Installation of anchor rods or fischer internal threaded anchors RG MI

**10**

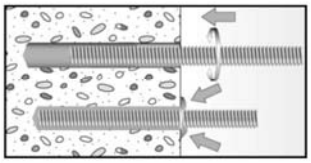

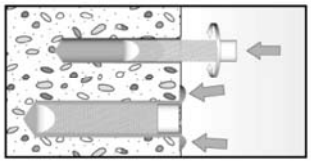

Only use clean and oil-free anchor elements. Mark the setting depth of the anchor. Push the anchor rod or fischer internal threaded RG MI anchor down to the bottom of the hole, turning it slightly while doing so.
After inserting the anchor element, excess mortar must be emerged around the anchor element.

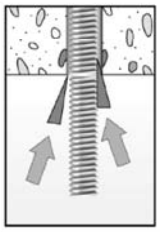

For overhead installations support the anchor rod with wedges (e. g. fischer centering wedges) or fischer overhead clips.

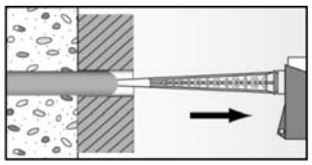

For push through installation fill the annular gap with mortar

**11**

Wait for the specified curing time $t_{cure}$ see **table B9.2**

**12**

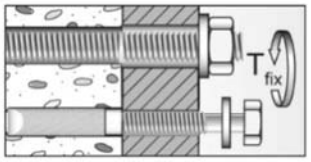


Mounting the fixture max $T_{fix}$ see **tables B3.1 and B6.1**

**Option**

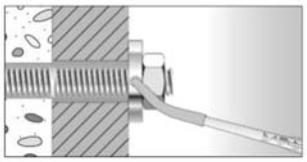

After the minimum curing time is reached, the gap between anchor and fixture (annular clearance) may be filled with mortar via the fischer filling disc FFD. Compressive strength ≥ 50 N/mm² (e.g. fischer injection mortars FIS HB, FIS SB, FIS V, FIS EM Plus)
ATTENTION: Using fischer filling disk FFD reduces $t_{fix}$ (usable length of the anchor)

**Installation instructions part 4**

Installation reinforcing bars and fischer rebar anchor FRA

| | | | | | |
|---|---|---|---|---|---|
| 10 | 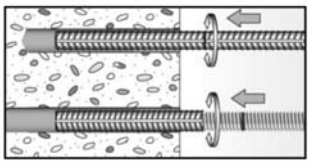 | Only use clean and oil-free reinforcing bars or fischer FRA. Mark the setting depth. Turn while using force to push the reinforcement bar or the fischer FRA into the filled hole up to the setting depth mark | | | |
| | 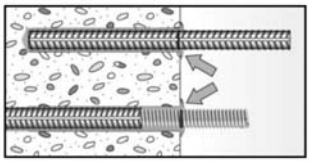 | When the setting depth mark is reached, excess mortar must be emerged from the mouth of the drill hole. | | | |
| 11 | | Wait for the specified curing time $t_{cure}$ see **table B9.2** | 12 | 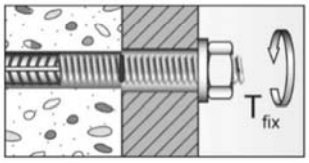  | Mounting the fixture max $T_{fix}$ see **table B8.1** |

| | |
|---|---|
| fischer injection system FIS EM Plus | **Annex B 13** |
| **Intended use**<br>Installation instructions part 4 | |

**Table C1.1:** Essential characteristics[3)] for the **steel bearing capacity** under tensile / shear load of **fischer anchor rods** and **standard threaded rods**

| **Anchor rod / standard threaded rod** | | | | **M8** | **M10** | **M12** | **M14** | **M16** | **M20** | **M22** | **M24** | **M27** | **M30** |
|---|---|---|---|---|---|---|---|---|---|---|---|---|---|
| **Bearing capacity under tensile load, steel failure** | | | | | | | | | | | | | |
| Characterstic resistance $N_{Rk,s}$ | Steel zinc plated | Property class 5.8 | [kN] | 19(17) | 29(27) | 43 | 58 | 79 | 123 | 152 | 177 | 230 | 281 |
| | | 8.8 | | 29(27) | 47(43) | 68 | 92 | 126 | 196 | 243 | 282 | 368 | 449 |
| | Stainless steel A4 and high corrosion resistant steel C | 50 | | 19 | 29 | 43 | 58 | 79 | 123 | 152 | 177 | 230 | 281 |
| | | 70 | | 26 | 41 | 59 | 81 | 110 | 172 | 212 | 247 | 322 | 393 |
| | | 80 | | 30 | 47 | 68 | 92 | 126 | 196 | 243 | 282 | 368 | 449 |
| **Partial factors** [1)] | | | | | | | | | | | | | |
| Partial factor $\gamma_{Ms,N}$ | Steel zinc plated | Property class 5.8 | [-] | 1,50 | | | | | | | | | |
| | | 8.8 | | 1,50 | | | | | | | | | |
| | Stainless steel A4 and high corrosion resistant steel C | 50 | | 2,86 | | | | | | | | | |
| | | 70 | | 1,50[2)] / 1,87 | | | | | | | | | |
| | | 80 | | 1,60 | | | | | | | | | |
| **Bearing capacity under shear load, steel failure** | | | | | | | | | | | | | |
| **without lever arm** | | | | | | | | | | | | | |
| Characterstic resistance $V^0_{Rk,s}$ | Steel zinc plated | Property class 5.8 | [kN] | 9(8) | 15(13) | 21 | 29 | 39 | 61 | 76 | 89 | 115 | 141 |
| | | 8.8 | | 15(13) | 23(21) | 34 | 46 | 63 | 98 | 122 | 141 | 184 | 225 |
| | Stainless steel A4 and high corrosion resistant steel C | 50 | | 9 | 15 | 21 | 29 | 39 | 61 | 76 | 89 | 115 | 141 |
| | | 70 | | 13 | 20 | 30 | 40 | 55 | 86 | 107 | 124 | 161 | 197 |
| | | 80 | | 15 | 23 | 34 | 46 | 63 | 98 | 122 | 141 | 184 | 225 |
| Ductility factor | | $k_7$ | [-] | 1,0 | | | | | | | | | |
| **with lever arm** | | | | | | | | | | | | | |
| Charact. resistance $M^0_{Rk,s}$ | Steel zinc plated | Property class 5.8 | [Nm] | 19(16) | 37(33) | 65 | 104 | 166 | 324 | 447 | 560 | 833 | 1123 |
| | | 8.8 | | 30(26) | 60(53) | 105 | 167 | 266 | 519 | 716 | 896 | 1333 | 1797 |
| | Stainless steel A4 and high corrosion resistant steel C | 50 | | 19 | 37 | 65 | 104 | 166 | 324 | 447 | 560 | 833 | 1123 |
| | | 70 | | 26 | 52 | 92 | 146 | 232 | 454 | 626 | 784 | 1167 | 1573 |
| | | 80 | | 30 | 60 | 105 | 167 | 266 | 519 | 716 | 896 | 1333 | 1797 |
| **Partial factors** [1)] | | | | | | | | | | | | | |
| Partial factor $\gamma_{Ms,V}$ | Steel zinc plated | Property class 5.8 | [-] | 1,25 | | | | | | | | | |
| | | 8.8 | | 1,25 | | | | | | | | | |
| | Stainless steel A4 and high corrosion resistant steel C | 50 | | 2,38 | | | | | | | | | |
| | | 70 | | 1,25[2)] / 1,56 | | | | | | | | | |
| | | 80 | | 1,33 | | | | | | | | | |

[1)] In absence of other national regulations
[2)] Only admissible for high corrosion resistant steel C, with $f_{yk}$ / $f_{uk}$ ≥ 0,8 and $A_5$ > 12 % (e.g. fischer anchor rods)
[3)] Values in brackets are valid for undersized threaded rods with smaller stress area $A_s$ for hotdip galvanized standard threaded rods according to EN ISO 10684:2004+AC:2009

**Table C2.1:** Essential characteristics for the **steel bearing capacity** under tensile / shear load of **fischer internal threaded anchors RG MI**

| fischer internal threaded anchors RG MI | | | | | M8 | M10 | M12 | M16 | M20 |
|---|---|---|---|---|---|---|---|---|---|
| **Bearing capacity under tensile load, steel failure** | | | | | | | | | |
| Charact. resistance with screw | $N_{Rk,s}$ | Property class | 5.8 | [kN] | 19 | 29 | 43 | 79 | 123 |
| | | | 8.8 | | 29 | 47 | 68 | 108 | 179 |
| | | Property class 70 | A4 | | 26 | 41 | 59 | 110 | 172 |
| | | | C | | 26 | 41 | 59 | 110 | 172 |
| **Partial factors**[1)] | | | | | | | | | |
| Partial factors | $\gamma_{Ms,N}$ | Property class | 5.8 | [-] | 1,50 | | | | |
| | | | 8.8 | | 1,50 | | | | |
| | | Property class 70 | A4 | | 1,87 | | | | |
| | | | C | | 1,87 | | | | |
| **Bearing capacity under shear load, steel failure** | | | | | | | | | |
| **Without lever arm** | | | | | | | | | |
| Charact. resistance with screw | $V^0_{Rk,s}$ | Property class | 5.8 | [kN] | 9,2 | 14,5 | 21,1 | 39,2 | 62,0 |
| | | | 8.8 | | 14,6 | 23,2 | 33,7 | 54,0 | 90,0 |
| | | Property class 70 | A4 | | 12,8 | 20,3 | 29,5 | 54,8 | 86,0 |
| | | | C | | 12,8 | 20,3 | 29,5 | 54,8 | 86,0 |
| Ductility factor | | | $k_7$ | [-] | 1,0 | | | | |
| **With lever arm** | | | | | | | | | |
| Charact. resistance with screw | $M^0_{Rk,s}$ | Property class | 5.8 | [Nm] | 20 | 39 | 68 | 173 | 337 |
| | | | 8.8 | | 30 | 60 | 105 | 266 | 519 |
| | | Property class 70 | A4 | | 26 | 52 | 92 | 232 | 454 |
| | | | C | | 26 | 52 | 92 | 232 | 454 |
| **Partial factors**[1)] | | | | | | | | | |
| Partial factors | $\gamma_{Ms,V}$ | Property class | 5.8 | [-] | 1,25 | | | | |
| | | | 8.8 | | 1,25 | | | | |
| | | Property class 70 | A4 | | 1,56 | | | | |
| | | | C | | 1,56 | | | | |

[1)] In absence of other national regulations

**Table C3.1:** Essential characteristics for the **steel bearing capacity** under tensile / shear load of **reinforcing bars**

| **Nominal diameter of the bar** | | **ϕ** | **8** | **10** | **12** | **14** | **16** | **18** | **20** | **22** | **24** | **25** | **26** | **28** | **30** | **32** | **34** | **36** | **40** |
|---|---|---|---|---|---|---|---|---|---|---|---|---|---|---|---|---|---|---|---|
| **Bearing capacity under tensile load, steel failure** | | | | | | | | | | | | | | | | | | | |
| Characterstic resistance | $N_{Rk,s}$ | [kN] | $A_s \cdot f_{uk}$ [1)] | | | | | | | | | | | | | | | | |
| **Bearing capacity under shear load, steel failure** | | | | | | | | | | | | | | | | | | | |
| **Without lever arm** | | | | | | | | | | | | | | | | | | | |
| Characterstic resistance | $V^0_{Rk,s}$ | [kN] | $0{,}5 \cdot A_s \cdot f_{uk}$ [1)] | | | | | | | | | | | | | | | | |
| Ductility factor | $k_7$ | [-] | 0,8 | | | | | | | | | | | | | | | | |
| **With lever arm** | | | | | | | | | | | | | | | | | | | |
| Characteristic resistance | $M^0_{Rk,s}$ | [Nm] | $1{,}2 \cdot W_{el} \cdot f_{uk}$ [1)] | | | | | | | | | | | | | | | | |

[1)] $f_{uk}$ or $f_{yk}$ respectively must be taken from the specifications of the reinforcing bar

**Table C3.2:** Essential characteristics for the **steel bearing capacity** under tensile / shear load of **fischer rebar anchors FRA**

| **fischer rebar anchor FRA** | | | **M12** | **M16** | **M20** | **M24** |
|---|---|---|---|---|---|---|
| **Bearing capacity under tensile load, steel failure** | | | | | | |
| Characterstic resistance | $N_{Rk,s}$ | [kN] | 63 | 111 | 173 | 270 |
| **Partial factor**[1)] | | | | | | |
| Partial factor | $\gamma_{Ms,N}$ | [-] | 1,4 | | | |
| **Bearing capacity under shear load, steel failure** | | | | | | |
| **Without lever arm** | | | | | | |
| Characterstic resistance | $V^0_{Rk,s}$ | [kN] | 30 | 55 | 86 | 124 |
| Ductility factor | $k_7$ | [-] | 1,0 | | | |
| **With lever arm** | | | | | | |
| Characteristic resistance | $M^0_{Rk,s}$ | [Nm] | 92 | 233 | 454 | 785 |
| **Partial factor**[1)] | | | | | | |
| Partial factor | $\gamma_{Ms,V}$ | [-] | 1,56 | | | |

[1)] In absence of other national regulations

**Table C4.1:** Essential characteristics under tensile / shear load

| Size | | | | All sizes |
|---|---|---|---|---|
| **Tensile load** | | | | |
| Uncracked concrete | | $k_{ucr,N}$ | [-] | 11,0 |
| Cracked concrete | | $k_{cr,N}$ | [-] | 7,7 |
| **Factors for the compressive strength of concrete > C20/25** | | | | |
| Increasing factor for $\tau_{Rk}$ | C25/30 | $\Psi_c$ | [-] | 1,02 |
| | C30/37 | | | 1,04 |
| | C35/45 | | | 1,06 |
| | C40/50 | | | 1,07 |
| | C45/55 | | | 1,08 |
| | C50/60 | | | 1,09 |
| **Splitting failure** | | | | |
| Edge distance | $h / h_{ef} \geq 2{,}0$ | $c_{cr,sp}$ | [mm] | $1{,}0\ h_{ef}$ |
| | $2{,}0 > h / h_{ef} > 1{,}3$ | | | $4{,}6\ h_{ef} - 1{,}8\ h$ |
| | $h / h_{ef} \leq 1{,}3$ | | | $2{,}26\ h_{ef}$ |
| Spacing | | $s_{cr,sp}$ | | $2\ c_{cr,sp}$ |
| **Concrete cone failure** | | | | |
| Edge distance | | $c_{cr,N}$ | [mm] | $1{,}5\ h_{ef}$ |
| Spacing | | $s_{cr,N}$ | | $2\ c_{cr,N}$ |
| **Shear load** | | | | |
| Installation factor | | $\gamma_{inst}$ | [-] | 1,0 |
| **Concrete pry-out failure** | | | | |
| Factor for pry-out failure | | $k_8$ | [-] | 2,0 |
| **Concrete edge failure** | | | | |
| The value of $h_{ef}$ (=$l_f$) under shear load | | | [-] | Conditions according to 1992-4:2018: chapter 7.2.2.5; Section 6; formular 7.43 |

| **Calculation diameters** | | | | | | | | | | | | |
|---|---|---|---|---|---|---|---|---|---|---|---|---|
| Size | | | M8 | M10 | M12 | M14 | M16 | M20 | M22 | M24 | M27 | M30 |
| fischer anchor rods and standard threaded rods | $d_{nom}$ | [mm] | 8 | 10 | 12 | 14 | 16 | 20 | 22 | 24 | 27 | 30 |
| fischer internal threaded anchors RG MI | $d_{nom}$ | [mm] | 12 | 16 | 18 | - | 22 | 28 | - | - | - | - |
| fischer rebar anchor FRA | $d_{nom}$ | [mm] | - | - | 12 | - | 16 | 20 | - | 25 | - | - |

| Size (nominal diameter of the bar) | | $\phi$ | 8 | 10 | 12 | 14 | 16 | 18 | 20 | 22 | 24 | 25 | 26 | 28 | 30 | 32 | 34 | 36 | 40 |
|---|---|---|---|---|---|---|---|---|---|---|---|---|---|---|---|---|---|---|---|
| Reinforcing bar | $d_{nom}$ | [mm] | 8 | 10 | 12 | 14 | 16 | 18 | 20 | 22 | 24 | 25 | 26 | 28 | 30 | 32 | 34 | 36 | 40 |

**Table C5.1:** Essential characteristics of **tensile resistance** for **fischer anchor rods** and **standard threaded rods** in hammer or diamond drilled holes; **uncracked or cracked concrete; service life time 50 years**

| **Anchor rod / standard threaded rod** | | | | **M8** | **M10** | **M12** | **M14** | **M16** | **M20** | **M22** | **M24** | **M27** | **M30** |
|---|---|---|---|---|---|---|---|---|---|---|---|---|---|
| **Combined pullout and concrete cone failure** | | | | | | | | | | | | | |
| Calculation diameter | | d | [mm] | 8 | 10 | 12 | 14 | 16 | 20 | 22 | 24 | 27 | 30 |
| **Uncracked concrete** | | | | | | | | | | | | | |
| **Characteristic bond resistance in uncracked concrete C20/25** | | | | | | | | | | | | | |
| Hammer-drilling with standard drill bit or hollow drill bit (dry or wet concrete) | | | | | | | | | | | | | |
| Temperature range | I: 35 °C / 60 °C | $\tau_{Rk,ucr}$ | [N/mm²] | 18 | 18 | 18 | 17 | 17 | 16 | 15 | 15 | 15 | 14 |
| | II: 50 °C / 72 °C | | | 18 | 17 | 17 | 16 | 16 | 15 | 14 | 14 | 14 | 13 |
| Hammer-drilling with standard drill bit or hollow drill bit (water filled hole) | | | | | | | | | | | | | |
| Temperature range | I: 35 °C / 60 °C | $\tau_{Rk,ucr}$ | [N/mm²] | 16 | 16 | 15 | 13 | 13 | 11 | 11 | 10 | 10 | 9 |
| | II: 50 °C / 72 °C | | | 15 | 14 | 14 | 13 | 12 | 11 | 10 | 10 | 9 | 9 |
| Diamond-drilling (dry or wet concrete as well as water filled hole) | | | | | | | | | | | | | |
| Temperature range | I: 35 °C / 60 °C | $\tau_{Rk,ucr}$ | [N/mm²] | 16 | 15 | 13 | 12 | 12 | 10 | 10 | 10 | 9 | 9 |
| | II: 50 °C / 72 °C | | | 15 | 14 | 12 | 11 | 11 | 10 | 9 | 9 | 8 | 8 |
| **Installation factors** | | | | | | | | | | | | | |
| Dry or wet concrete | | $\gamma_{inst}$ | [-] | 1,0 | | | | | | | | | |
| Water filled hole | | | | 1,4 | | | | | | | | | |
| **Cracked concrete** | | | | | | | | | | | | | |
| **Characteristic bond resistance in cracked concrete C20/25** | | | | | | | | | | | | | |
| Hammer-drilling with standard drill bit or hollow drill bit (dry or wet concrete) | | | | | | | | | | | | | |
| Temperature range | I: 35 °C / 60 °C | $\tau_{Rk,cr}$ | [N/mm²] | 7,5 | 7,5 | 9 | 8,5 | 8,5 | 8,5 | 8,5 | 8,5 | 8,5 | 8,5 |
| | II: 50 °C / 72 °C | | | 7,5 | 7,5 | 9 | 8,5 | 8,5 | 8,5 | 8,5 | 8,5 | 8,5 | 8,5 |
| Diamond - drilling (dry or wet concrete) | | | | | | | | | | | | | |
| Temperature range | I: 35 °C / 60 °C | $\tau_{Rk,cr}$ | [N/mm²] | 7 | 7 | 7 | 7 | 6 | 6 | 7 | 7 | 7 | 7 |
| | II: 50 °C / 72 °C | | | 7 | 7 | 7 | 7 | 6 | 6 | 7 | 7 | 7 | 7 |
| Hammer-drilling with standard drill bit or hollow drill bit and diamond-drilling (water filled hole) | | | | | | | | | | | | | |
| Temperature range | I: 35 °C / 60 °C | $\tau_{Rk,cr}$ | [N/mm²] | 6 | 7,5 | 7,5 | 7 | 6 | 6 | 6 | 6 | 6 | 6 |
| | II: 50 °C / 72 °C | | | 6 | 7 | 7 | 7 | 6 | 6 | 6 | 6 | 6 | 6 |
| **Installation factors** | | | | | | | | | | | | | |
| Dry or wet concrete | | $\gamma_{inst}$ | [-] | 1,0 | | | | | | | | | |
| Water filled hole | | | | 1,2 | | | | | 1,4 | | | | |

fischer injection system FIS EM Plus

**Performance**
Essential characteristics of tensile resistance for fischer anchor rod and standard threaded rods; service life time 50 years

**Annex C 5**

**Table C6.1:** Essential characteristics of **tensile resistance** for **fischer anchor rods** and **standard threaded rods** in hammer or diamond drilled holes; **uncracked or cracked concrete; service life time 100 years**

| **Anchor rod / standard threaded rod** | | | | **M8** | **M10** | **M12** | **M14** | **M16** | **M20** | **M22** | **M24** | **M27** | **M30** |
|---|---|---|---|---|---|---|---|---|---|---|---|---|---|
| **Combined pullout and concrete cone failure** | | | | | | | | | | | | | |
| Calculation diameter | | d | [mm] | 8 | 10 | 12 | 14 | 16 | 20 | 22 | 24 | 27 | 30 |
| **Uncracked concrete** | | | | | | | | | | | | | |
| **Characteristic bond resistance in uncracked concrete C20/25** | | | | | | | | | | | | | |
| Hammer-drilling with standard drill bit or hollow drill bit (dry or wet concrete) | | | | | | | | | | | | | |
| Temperature range | I: 35 °C / 60 °C | $\tau_{Rk,ucr}$ | [N/mm²] | 18 | 18 | 18 | 17 | 17 | 16 | 15 | 15 | 15 | 14 |
| | II: 50 °C / 72 °C | | | 18 | 17 | 17 | 16 | 16 | 15 | 14 | 14 | 14 | 13 |
| Diamond-drilling (dry or wet concrete) | | | | | | | | | | | | | |
| Temperature range | I: 35 °C / 60 °C | $\tau_{Rk,ucr}$ | [N/mm²] | 16 | 15 | 13 | 12 | 12 | 10 | 10 | 10 | 9 | 9 |
| | II: 50 °C / 72 °C | | | 15 | 14 | 12 | 11 | 11 | 10 | 9 | 9 | 8 | 8 |
| **Installation factors** | | | | | | | | | | | | | |
| Dry or wet concrete | | $\gamma_{inst}$ | [-] | 1,0 | | | | | | | | | |
| Service life time 100 years | I: 35 °C / 60 °C | $\alpha_{100\ years}$ | [-] | 0,75 | 0,75 | 0,75 | 0,75 | 0,75 | 0,75 | 0,75 | 0,75 | 0,75 | 0,75 |
| | II: 50 °C / 72 °C | | | 0,55 | 0,60 | 0,60 | 0,65 | 0,65 | 0,65 | 0,65 | 0,65 | 0,65 | 0,65 |
| **Cracked concrete** | | | | | | | | | | | | | |
| **Characteristic bond resistance in cracked concrete C20/25** | | | | | | | | | | | | | |
| Hammer-drilling with standard drill bit or hollow drill bit (dry or wet concrete) | | | | | | | | | | | | | |
| Temperature range | I: 35 °C / 60 °C | $\tau_{Rk,cr}$ | [N/mm²] | 7,5 | 7,5 | 9 | 8,5 | 8,5 | 8,5 | 8,5 | 8,5 | 8,5 | 8,5 |
| | II: 50 °C / 72 °C | | | 7,5 | 7,5 | 9 | 8,5 | 8,5 | 8,5 | 8,5 | 8,5 | 8,5 | 8,5 |
| Diamond - drilling (dry or wet concrete) | | | | | | | | | | | | | |
| Temperature range | I: 35 °C / 60 °C | $\tau_{Rk,cr}$ | [N/mm²] | 7 | 7 | 7 | 7 | 6 | 6 | 7 | 7 | 7 | 7 |
| | II: 50 °C / 72 °C | | | 7 | 7 | 7 | 7 | 6 | 6 | 7 | 7 | 7 | 7 |
| **Installation factors** | | | | | | | | | | | | | |
| Dry or wet concrete | | $\gamma_{inst}$ | [-] | 1,0 | | | | | | | | | |
| Service life time 100 years | I: 35 °C / 60 °C | $\alpha_{100\ years}$ | [-] | 0,60 | 0,85 | 0,80 | 0,65 | 0,65 | 0,65 | 0,65 | 0,65 | 0,65 | 0,65 |
| | II: 50 °C / 72 °C | | | 0,60 | 0,85 | 0,80 | 0,65 | 0,65 | 0,65 | 0,65 | 0,65 | 0,65 | 0,65 |

1) **Calculation of characteristic bond resistance in uncracked concrete $\tau_{Rk,100\ years,ucr}$ :**

$$\tau_{Rk,100\ years,ucr} = \alpha_{100\ years} \cdot \tau_{Rk,ucr}$$

2) **Calculation of characteristic bond resistance in cracked concrete $\tau_{Rk,100\ years,cr}$ :**

$$\tau_{Rk,100\ years,cr} = \alpha_{100\ years} \cdot \tau_{Rk,cr}$$

**Table C7.1:** Essential characteristics of **tensile resistance** for **fischer internal threaded anchors RG MI** in hammer or diamond drilled holes; **uncracked or cracked concrete; service life time 50 years**

| **Internal threaded anchor RG MI** | | | | **M8** | **M10** | **M12** | **M16** | **M20** |
|---|---|---|---|---|---|---|---|---|
| **Combined pullout and concrete cone failure** | | | | | | | | |
| Calculation diameter | | d | [mm] | 12 | 16 | 18 | 22 | 28 |
| **Uncracked concrete** | | | | | | | | |
| **Characteristic bond resistance in uncracked concrete C20/25** | | | | | | | | |
| Hammer-drilling with standard drill bit or hollow drill bit (dry or wet concrete) | | | | | | | | |
| Temperature range | I: 35 °C / 60 °C | $\tau_{Rk,ucr}$ | [N/mm²] | 15 | 14 | 14 | 13 | 12 |
| | II: 50 °C / 72 °C | | | 14 | 13 | 13 | 12 | 11 |
| Hammer-drilling with standard drill bit or hollow drill bit (water filled hole) | | | | | | | | |
| Temperature range | I: 35 °C / 60 °C | $\tau_{Rk,ucr}$ | [N/mm²] | 14 | 12 | 12 | 11 | 10 |
| | II: 50 °C / 72 °C | | | 13 | 12 | 11 | 10 | 9 |
| Diamond-drilling (dry or wet concrete as well as water filled hole) | | | | | | | | |
| Temperature range | I: 35 °C / 60 °C | $\tau_{Rk,ucr}$ | [N/mm²] | 13 | 12 | 11 | 10 | 9 |
| | II: 50 °C / 72 °C | | | 12 | 11 | 10 | 9 | 8 |
| **Installation factors** | | | | | | | | |
| Dry or wet concrete | | $\gamma_{inst}$ | [-] | 1,0 | | | | |
| Water filled hole | | | | 1,4 | | | | |
| **Cracked concrete** | | | | | | | | |
| **Characteristic bond resistance in cracked concrete C20/25** | | | | | | | | |
| Hammer-drilling with standard drill bit or hollow drill bit and diamond-drilling (dry or wet concrete) | | | | | | | | |
| Temperature range | I: 35 °C / 60 °C | $\tau_{Rk,cr}$ | [N/mm²] | 7 | 6 | 6 | 7 | 7 |
| | II: 50 °C / 72 °C | | | 7 | 6 | 6 | 7 | 7 |
| Hammer-drilling with standard drill bit or hollow drill bit and diamond-drilling (water filled hole) | | | | | | | | |
| Temperature range | I: 35 °C / 60 °C | $\tau_{Rk,cr}$ | [N/mm²] | 7 | 6,5 | 6 | 6 | 6 |
| | II: 50 °C / 72 °C | | | 7 | 6 | 6 | 6 | 6 |
| **Installation factors** | | | | | | | | |
| Dry or wet concrete | | $\gamma_{inst}$ | [-] | 1,0 | | | | |
| Water filled hole | | | | 1,2 | | | 1,4 | |

**Table C8.1:** Essential characteristics of **tensile resistance** for **fischer internal threaded anchors RG MI** in hammer or diamond drilled holes; **uncracked or cracked concrete; service life time 100 years**

| **Internal threaded anchor RG MI** | | | | **M8** | **M10** | **M12** | **M16** | **M20** |
|---|---|---|---|---|---|---|---|---|
| **Combined pullout and concrete cone failure** | | | | | | | | |
| Calculation diameter | | d | [mm] | 12 | 16 | 18 | 22 | 28 |
| **Uncracked concrete** | | | | | | | | |
| **Characteristic bond resistance in uncracked concrete C20/25** | | | | | | | | |
| Hammer-drilling with standard drill bit or hollow drill bit (dry or wet concrete) | | | | | | | | |
| Temperature range | I: 35 °C / 60 °C | $\tau_{Rk,ucr}$ | [N/mm²] | 15 | 14 | 14 | 13 | 12 |
| | II: 50 °C / 72 °C | | | 14 | 13 | 13 | 12 | 11 |
| Diamond-drilling (dry or wet concrete) | | | | | | | | |
| Temperature range | I: 35 °C / 60 °C | $\tau_{Rk,ucr}$ | [N/mm²] | 13 | 12 | 11 | 10 | 9 |
| | II: 50 °C / 72 °C | | | 12 | 11 | 10 | 9 | 8 |
| **Installation factors** | | | | | | | | |
| Dry or wet concrete | | $\gamma_{inst}$ | [-] | 1,0 | | | | |
| Service life time 100 years | I: 35 °C / 60 °C | $\alpha_{100\ years}$ | [-] | 0,75 | 0,75 | 0,75 | 0,75 | 0,75 |
| | II: 50 °C / 72 °C | | | 0,55 | 0,60 | 0,60 | 0,65 | 0,65 |
| **Cracked concrete** | | | | | | | | |
| **Characteristic bond resistance in cracked concrete C20/25** | | | | | | | | |
| Hammer-drilling with standard drill bit or hollow drill bit and diamond-drilling (dry or wet concrete) | | | | | | | | |
| Temperature range | I: 35 °C / 60 °C | $\tau_{Rk,cr}$ | [N/mm²] | 7 | 6 | 6 | 7 | 7 |
| | II: 50 °C / 72 °C | | | 7 | 6 | 6 | 7 | 7 |
| **Installation factors** | | | | | | | | |
| Dry or wet concrete | | $\gamma_{inst}$ | [-] | 1,0 | | | | |
| Service life time 100 years | I: 35 °C / 60 °C | $\alpha_{100\ years}$ | [-] | 0,60 | 0,85 | 0,80 | 0,65 | 0,65 |
| | II: 50 °C / 72 °C | | | 0,60 | 0,85 | 0,80 | 0,65 | 0,65 |

1) **Calculation of characteristic bond resistance in uncracked concrete $\tau_{Rk,100\ years,ucr}$ :**

$$\tau_{Rk,100\ years,ucr} = \alpha_{100\ years} \cdot \tau_{Rk,ucr}$$

2) **Calculation of characteristic bond resistance in cracked concrete $\tau_{Rk,100\ years,cr}$ :**

$$\tau_{Rk,100\ years,cr} = \alpha_{100\ years} \cdot \tau_{Rk,cr}$$

**Table C9.1:** Essential characteristics of **tensile resistance** for **reinforcing bars** in hammer or diamond drilled holes; **uncracked or cracked concrete; service life time 50 years**

| **Nominal diameter of the bar** | | **ϕ** | **8** | **10** | **12** | **14** | **16** | **18** | **20** | **22** | **24** | **25** | **26** | **28** | **30** | **32** | **34** | **36** | **40** |
|---|---|---|---|---|---|---|---|---|---|---|---|---|---|---|---|---|---|---|---|
| **Combined pullout and concrete cone failure** | | | | | | | | | | | | | | | | | | | |
| Calculation diameter | d | [mm] | 8 | 10 | 12 | 14 | 16 | 18 | 20 | 22 | 24 | 25 | 26 | 28 | 30 | 32 | 34 | 36 | 40 |
| **Uncracked concrete** | | | | | | | | | | | | | | | | | | | |
| **Characteristic bond resistance in uncracked concrete C20/25** | | | | | | | | | | | | | | | | | | | |
| Hammer-drilling with standard drill bit or hollow drill bit (dry or wet concrete) | | | | | | | | | | | | | | | | | | | |
| Temperature range I: 35 °C / 60 °C | $\tau_{Rk,ucr}$ | [N/mm²] | 16 | 15 | 15 | 14 | 14 | 13 | 13 | 13 | 12 | 12 | 12 | 12 | 12 | 12 | 11 | 11 | 11 |
| Temperature range II: 50 °C / 72 °C | $\tau_{Rk,ucr}$ | [N/mm²] | 15 | 14 | 14 | 13 | 13 | 12 | 12 | 12 | 12 | 11 | 11 | 11 | 11 | 11 | 11 | 10 | 10 |
| Hammer-drilling with standard drill bit or hollow drill bit (water filled hole) | | | | | | | | | | | | | | | | | | | |
| Temperature range I: 35 °C / 60 °C | $\tau_{Rk,ucr}$ | [N/mm²] | 16 | 16 | 14 | 13 | 12 | 12 | 11 | 11 | 10 | 10 | 10 | 10 | 9 | 9 | 9 | 8 | 8 |
| Temperature range II: 50 °C / 72 °C | $\tau_{Rk,ucr}$ | [N/mm²] | 15 | 14 | 13 | 12 | 12 | 11 | 11 | 10 | 10 | 9 | 9 | 9 | 9 | 8 | 8 | 8 | 8 |
| Diamond-drilling (dry or wet concrete as well as water filled hole) | | | | | | | | | | | | | | | | | | | |
| Temperature range I: 35 °C / 60 °C | $\tau_{Rk,ucr}$ | [N/mm²] | 16 | 15 | 13 | 12 | 12 | 11 | 10 | 10 | 10 | 9 | 9 | 9 | 9 | 8 | 8 | 8 | 7 |
| Temperature range II: 50 °C / 72 °C | $\tau_{Rk,ucr}$ | [N/mm²] | 15 | 14 | 12 | 11 | 11 | 10 | 10 | 9 | 9 | 9 | 8 | 8 | 8 | 8 | 7 | 7 | 7 |
| **Installation factors** | | | | | | | | | | | | | | | | | | | |
| Dry or wet concrete | $\gamma_{inst}$ | [-] | 1,0 | | | | | | | | | | | | | | | | |
| Water filled hole | $\gamma_{inst}$ | [-] | 1,4 | | | | | | | | | | | | | | | | |
| **Cracked concrete** | | | | | | | | | | | | | | | | | | | |
| **Characteristic bond resistance in cracked concrete C20/25** | | | | | | | | | | | | | | | | | | | |
| Hammer-drilling with standard drill bit or hollow drill bit (dry or wet concrete) | | | | | | | | | | | | | | | | | | | |
| Temperature range I: 35 °C / 60 °C | $\tau_{Rk,cr}$ | [N/mm²] | 7 | 7 | 8 | 8 | 8 | 8 | 8 | 8 | 8 | 8 | 8 | 8 | 8 | 8 | 8 | 8 | 8 |
| Temperature range II: 50 °C / 72 °C | $\tau_{Rk,cr}$ | [N/mm²] | 7 | 7 | 8 | 8 | 8 | 8 | 8 | 8 | 8 | 8 | 8 | 8 | 8 | 8 | 8 | 8 | 8 |
| Diamond-drilling (dry or wet concrete) | | | | | | | | | | | | | | | | | | | |
| Temperature range I: 35 °C / 60 °C | $\tau_{Rk,cr}$ | [N/mm²] | 7 | 7 | 7 | 7 | 6 | 6 | 6 | 7 | 7 | 7 | 7 | 7 | 7 | 5 | 5 | 5 | 5 |
| Temperature range II: 50 °C / 72 °C | $\tau_{Rk,cr}$ | [N/mm²] | 7 | 7 | 7 | 7 | 6 | 6 | 6 | 7 | 7 | 7 | 7 | 7 | 7 | 5 | 5 | 5 | 5 |
| Hammer-drilling with standard drill bit or hollow drill bit and diamond-drilling (water filled hole) | | | | | | | | | | | | | | | | | | | |
| Temperature range I: 35 °C / 60 °C | $\tau_{Rk,cr}$ | [N/mm²] | 6 | 7,5 | 6,5 | 6,5 | 6,5 | 6 | 6 | 6 | 6 | 6 | 6 | 6 | 6 | 5 | 5 | 5 | 5 |
| Temperature range II: 50 °C / 72 °C | $\tau_{Rk,cr}$ | [N/mm²] | 6 | 6,5 | 6,5 | 6 | 6 | 6 | 6 | 6 | 6 | 6 | 6 | 6 | 6 | 5 | 5 | 5 | 5 |
| **Installation factors** | | | | | | | | | | | | | | | | | | | |
| Dry or wet concrete | $\gamma_{inst}$ | [-] | 1,0 | | | | | | | | | | | | | | | | |
| Water filled hole | $\gamma_{inst}$ | [-] | 1,2 | | | | | | 1,4 | | | | | | | | | | |

**Table C10.1:** Essential characteristics of **tensile resistance** for **reinforcing bars** in hammer or diamond drilled holes; **uncracked or cracked concrete; service life time 100 years**

| **Nominal diameter of the bar** | | **ϕ** | **8** | **10** | **12** | **14** | **16** | **18** | **20** | **22** | **24** | **25** | **26** | **28** | **30** | **32** | **34** | **36** | **40** |
|---|---|---|---|---|---|---|---|---|---|---|---|---|---|---|---|---|---|---|---|
| **Combined pullout and concrete cone failure** | | | | | | | | | | | | | | | | | | | |
| Calculation diameter | d | [mm] | 8 | 10 | 12 | 14 | 16 | 18 | 20 | 22 | 24 | 25 | 26 | 28 | 30 | 32 | 34 | 36 | 40 |
| **Uncracked concrete** | | | | | | | | | | | | | | | | | | | |
| **Characteristic bond resistance in uncracked concrete C20/25** | | | | | | | | | | | | | | | | | | | |
| Hammer-drilling with standard drill bit or hollow drill bit (dry or wet concrete) | | | | | | | | | | | | | | | | | | | |
| Temperature range I: 35 °C / 60 °C | $\tau_{Rk,ucr}$ | [N/mm²] | 16 | 15 | 15 | 14 | 14 | 13 | 13 | 13 | 12 | 12 | 12 | 12 | 12 | 12 | 11 | 11 | 11 |
| Temperature range II: 50 °C / 72 °C | $\tau_{Rk,ucr}$ | [N/mm²] | 15 | 14 | 14 | 13 | 13 | 12 | 12 | 12 | 12 | 11 | 11 | 11 | 11 | 11 | 11 | 10 | 10 |
| Diamond-drilling (dry or wet concrete) | | | | | | | | | | | | | | | | | | | |
| Temperature range I: 35 °C / 60 °C | $\tau_{Rk,ucr}$ | [N/mm²] | 16 | 15 | 13 | 12 | 12 | 11 | 10 | 10 | 10 | 9 | 9 | 9 | 9 | 8 | 8 | 8 | 7 |
| Temperature range II: 50 °C / 72 °C | $\tau_{Rk,ucr}$ | [N/mm²] | 15 | 14 | 12 | 11 | 11 | 10 | 10 | 9 | 9 | 9 | 8 | 8 | 8 | 8 | 7 | 7 | 7 |
| **Installation factors** | | | | | | | | | | | | | | | | | | | |
| Dry or wet concrete | $\gamma_{inst}$ | [-] | 1,0 | | | | | | | | | | | | | | | | |
| Service life time 100 years I: 35 °C / 60 °C | $\alpha_{100\ years}$ | [-] | 0,75 | 0,75 | 0,75 | 0,75 | 0,75 | 0,75 | 0,75 | 0,75 | 0,75 | 0,75 | 0,75 | 0,75 | 0,75 | 0,75 | 0,75 | 0,75 | 0,75 |
| Service life time 100 years II: 50 °C / 72 °C | $\alpha_{100\ years}$ | [-] | 0,55 | 0,60 | 0,60 | 0,65 | 0,65 | 0,65 | 0,65 | 0,65 | 0,65 | 0,65 | 0,65 | 0,65 | 0,65 | 0,65 | 0,65 | 0,65 | 0,65 |
| **Cracked concrete** | | | | | | | | | | | | | | | | | | | |
| **Characteristic bond resistance in cracked concrete C20/25** | | | | | | | | | | | | | | | | | | | |
| Hammer-drilling with standard drill bit or hollow drill bit (dry or wet concrete) | | | | | | | | | | | | | | | | | | | |
| Temperature range I: 35 °C / 60 °C | $\tau_{Rk,cr}$ | [N/mm²] | 7 | 7 | 8 | 8 | 8 | 8 | 8 | 8 | 8 | 8 | 8 | 8 | 8 | 8 | 8 | 8 | 8 |
| Temperature range II: 50 °C / 72 °C | $\tau_{Rk,cr}$ | [N/mm²] | 7 | 7 | 8 | 8 | 8 | 8 | 8 | 8 | 8 | 8 | 8 | 8 | 8 | 8 | 8 | 8 | 8 |
| Diamond-drilling (dry or wet concrete) | | | | | | | | | | | | | | | | | | | |
| Temperature range I: 35 °C / 60 °C | $\tau_{Rk,cr}$ | [N/mm²] | 7 | 7 | 7 | 7 | 6 | 6 | 6 | 7 | 7 | 7 | 7 | 7 | 7 | 5 | 5 | 5 | 5 |
| Temperature range II: 50 °C / 72 °C | $\tau_{Rk,cr}$ | [N/mm²] | 7 | 7 | 7 | 7 | 6 | 6 | 6 | 7 | 7 | 7 | 7 | 7 | 7 | 5 | 5 | 5 | 5 |
| **Installation factors** | | | | | | | | | | | | | | | | | | | |
| Dry or wet concrete | $\gamma_{inst}$ | [-] | 1,0 | | | | | | | | | | | | | | | | |
| Service life time 100 years I: 35 °C / 60 °C | $\alpha_{100\ years}$ | [-] | 0,60 | 0,85 | 0,80 | 0,65 | 0,65 | 0,65 | 0,65 | 0,65 | 0,65 | 0,65 | 0,65 | 0,65 | 0,65 | 0,65 | 0,65 | 0,65 | 0,65 |
| Service life time 100 years II: 50 °C / 72 °C | $\alpha_{100\ years}$ | [-] | 0,60 | 0,85 | 0,80 | 0,65 | 0,65 | 0,65 | 0,65 | 0,65 | 0,65 | 0,65 | 0,65 | 0,65 | 0,65 | 0,65 | 0,65 | 0,65 | 0,65 |

1) **Calculation of characteristic bond resistance in uncracked concrete $\tau_{Rk,100\ years,ucr}$ :**

$$\tau_{Rk,100\ years,ucr} = \alpha_{100\ years} \cdot \tau_{Rk,ucr}$$

2) **Calculation of characteristic bond resistance in cracked concrete $\tau_{Rk,100\ years,cr}$ :**

$$\tau_{Rk,100\ years,cr} = \alpha_{100\ years} \cdot \tau_{Rk,cr}$$

**Table C11.1:** Essential characteristics of **tensile resistance** for **fischer rebar anchors FRA** in hammer or diamond drilled holes; **uncracked or cracked concrete; service life time 50 years**

| **fischer rebar anchor FRA** | | | | **M12** | **M16** | **M20** | **M24** |
|---|---|---|---|---|---|---|---|
| **Combined pullout and concrete cone failure** | | | | | | | |
| Calculation diameter | | d | [mm] | 12 | 16 | 20 | 25 |
| **Uncracked concrete** | | | | | | | |
| **Characteristic bond resistance in uncracked concrete C20/25** | | | | | | | |
| Hammer-drilling with standard drill bit or hollow drill bit (dry or wet concrete) | | | | | | | |
| Temperature range | I: 35 °C / 60 °C | $\tau_{Rk,ucr}$ | [N/mm²] | 15 | 14 | 13 | 12 |
| | II: 50 °C / 72 °C | | | 14 | 13 | 12 | 12 |
| Hammer-drilling with standard drill bit or hollow drill bit (water filled hole) | | | | | | | |
| Temperature range | I: 35 °C / 60 °C | $\tau_{Rk,ucr}$ | [N/mm²] | 14 | 12 | 11 | 10 |
| | II: 50 °C / 72 °C | | | 13 | 12 | 11 | 9 |
| Diamond-drilling (dry or wet concrete as well as water filled hole) | | | | | | | |
| Temperature range | I: 35 °C / 60 °C | $\tau_{Rk,ucr}$ | [N/mm²] | 13 | 12 | 10 | 9 |
| | II: 50 °C / 72 °C | | | 12 | 11 | 10 | 9 |
| **Installation factors** | | | | | | | |
| Dry or wet concrete | | $\gamma_{inst}$ | [-] | 1,0 | | | |
| Water filled hole | | | | 1,4 | | | |
| **Cracked concrete** | | | | | | | |
| **Characteristic bond resistance in cracked concrete C20/25** | | | | | | | |
| Hammer-drilling with standard drill bit or hollow drill bit and diamond-drilling (dry or wet concrete) | | | | | | | |
| Temperature range | I: 35 °C / 60 °C | $\tau_{Rk,cr}$ | [N/mm²] | 8 | 8 | 8 | 8 |
| | II: 50 °C / 72 °C | | | 8 | 8 | 8 | 8 |
| Hammer-drilling with standard drill bit or hollow drill bit and diamond-drilling (water filled hole) | | | | | | | |
| Temperature range | I: 35 °C / 60 °C | $\tau_{Rk,cr}$ | [N/mm²] | 7 | 6 | 6 | 6 |
| | II: 50 °C / 72 °C | | | 7 | 6 | 6 | 6 |
| **Installation factors** | | | | | | | |
| Dry or wet concrete | | $\gamma_{inst}$ | [-] | 1,0 | | | |
| Water filled hole | | | | 1,2 | | 1,4 | |

**Table C12.1:** Essential characteristics of **tensile resistance** for **fischer rebar anchors FRA** in hammer or diamond drilled holes; **uncracked or cracked concrete; service life time 100 years**

| **fischer rebar anchor FRA** | | | | **M12** | **M16** | **M20** | **M24** |
|---|---|---|---|---|---|---|---|
| **Combined pullout and concrete cone failure** | | | | | | | |
| Calculation diameter | | d | [mm] | 12 | 16 | 20 | 25 |
| **Uncracked concrete** | | | | | | | |
| **Characteristic bond resistance in uncracked concrete C20/25** | | | | | | | |
| Hammer-drilling with standard drill bit or hollow drill bit (dry or wet concrete) | | | | | | | |
| Temperature range | I: 35 °C / 60 °C | $\tau_{Rk,ucr}$ | [N/mm²] | 15 | 14 | 13 | 12 |
| | II: 50 °C / 72 °C | | | 14 | 13 | 12 | 12 |
| Diamond-drilling (dry or wet concrete) | | | | | | | |
| Temperature range | I: 35 °C / 60 °C | $\tau_{Rk,ucr}$ | [N/mm²] | 13 | 12 | 10 | 9 |
| | II: 50 °C / 72 °C | | | 12 | 11 | 10 | 9 |
| **Installation factors** | | | | | | | |
| Dry or wet concrete | | $\gamma_{inst}$ | [-] | 1,0 | | | |
| Service life time 100 years | I: 35 °C / 60 °C | $\alpha_{100\ years}$ | [N/mm²] | 0,75 | 0,75 | 0,75 | 0,75 |
| | II: 50 °C / 72 °C | | | 0,60 | 0,65 | 0,65 | 0,65 |
| **Cracked concrete** | | | | | | | |
| **Characteristic bond resistance in cracked concrete C20/25** | | | | | | | |
| Hammer-drilling with standard drill bit or hollow drill bit and diamond-drilling (dry or wet concrete) | | | | | | | |
| Temperature range | I: 35 °C / 60 °C | $\tau_{Rk,cr}$ | [N/mm²] | 8 | 8 | 8 | 8 |
| | II: 50 °C / 72 °C | | | 8 | 8 | 8 | 8 |
| **Installation factors** | | | | | | | |
| Dry or wet concrete | | $\gamma_{inst}$ | [-] | 1,0 | | | |
| Service life time 100 years | I: 35 °C / 60 °C | $\alpha_{100\ years}$ | [-] | 0,80 | 0,65 | 0,65 | 0,65 |
| | II: 50 °C / 72 °C | | | 0,80 | 0,65 | 0,65 | 0,65 |

1) **Calculation of characteristic bond resistance in uncracked concrete $\tau_{Rk,100\ years,ucr}$ :**

$$\tau_{Rk,100\ years,ucr} = \alpha_{100\ years} \cdot \tau_{Rk,ucr}$$

2) **Calculation of characteristic bond resistance in cracked concrete $\tau_{Rk,100\ years,cr}$ :**

$$\tau_{Rk,100\ years,cr} = \alpha_{100\ years} \cdot \tau_{Rk,cr}$$

**Table C13.1: Displacements** for **anchor rods**

| Anchor rod | | M8 | M10 | M12 | M14 | M16 | M20 | M22 | M24 | M27 | M30 |
|---|---|---|---|---|---|---|---|---|---|---|---|
| **Displacement-Factors for tensile load[1)]** | | | | | | | | | | | |
| **Uncracked or cracked concrete; Temperature range I, II** | | | | | | | | | | | |
| $\delta_{N0\text{-Factor}}$ | [mm/(N/mm²)] | 0,07 | 0,08 | 0,09 | 0,09 | 0,10 | 0,11 | 0,11 | 0,12 | 0,12 | 0,13 |
| $\delta_{N\infty\text{-Factor}}$ | | 0,11 | 0,12 | 0,13 | 0,14 | 0,15 | 0,16 | 0,17 | 0,18 | 0,19 | 0,19 |
| **Displacement-Factors for shear load[2)]** | | | | | | | | | | | |
| **Uncracked or cracked concrete; Temperature range I, II** | | | | | | | | | | | |
| $\delta_{V0\text{-Factor}}$ | [mm/kN] | 0,18 | 0,15 | 0,12 | 0,10 | 0,09 | 0,07 | 0,07 | 0,06 | 0,05 | 0,05 |
| $\delta_{V\infty\text{-Factor}}$ | | 0,27 | 0,22 | 0,18 | 0,16 | 0,14 | 0,11 | 0,10 | 0,09 | 0,08 | 0,07 |

1) Calculation of effective displacement:

$\delta_{N0} = \delta_{N0\text{-Factor}} \cdot \tau_{Ed}$

$\delta_{N\infty} = \delta_{N\infty\text{-Factor}} \cdot \tau_{Ed}$

($\tau_{Ed}$: Design value of the applied tensile stress)

2) Calculation of effective displacement:

$\delta_{V0} = \delta_{V0\text{-Factor}} \cdot V_{Ed}$

$\delta_{V\infty} = \delta_{V\infty\text{-Factor}} \cdot V_{Ed}$

($V_{Ed}$: Design value of the applied shear force)

**Table C13.2: Displacements** for **fischer internal threaded anchors RG MI**

| Internal threaded anchor RG MI | | M8 | M10 | M12 | M16 | M20 |
|---|---|---|---|---|---|---|
| **Displacement-Factors for tensile load[1)]** | | | | | | |
| **Uncracked or cracked concrete; Temperature range I, II** | | | | | | |
| $\delta_{N0\text{-Factor}}$ | [mm/(N/mm²)] | 0,09 | 0,10 | 0,10 | 0,11 | 0,13 |
| $\delta_{N\infty\text{-Factor}}$ | | 0,13 | 0,15 | 0,16 | 0,17 | 0,19 |
| **Displacement-Factors for shear load[2)]** | | | | | | |
| **Uncracked or cracked concrete; Temperature range I, II** | | | | | | |
| $\delta_{V0\text{-Factor}}$ | [mm/kN] | 0,12 | 0,09 | 0,08 | 0,07 | 0,05 |
| $\delta_{V\infty\text{-Factor}}$ | | 0,18 | 0,14 | 0,12 | 0,10 | 0,08 |

1) Calculation of effective displacement:

$\delta_{N0} = \delta_{N0\text{-Factor}} \cdot \tau_{Ed}$

$\delta_{N\infty} = \delta_{N\infty\text{-Factor}} \cdot \tau_{Ed}$

($\tau_{Ed}$: Design value of the applied tensile stress)

2) Calculation of effective displacement:

$\delta_{V0} = \delta_{V0\text{-Factor}} \cdot V_{Ed}$

$\delta_{V\infty} = \delta_{V\infty\text{-Factor}} \cdot V_{Ed}$

($V_{Ed}$: Design value of the applied shear force)

**Table C14.1: Displacements** for **reinforcing bars**

| Nominal diameter of the bar | ϕ | 8 | 10 | 12 | 14 | 16 | 18 | 20 | 22 | 24 | 25 | 26 | 28 | 30 | 32 | 34 | 36 | 40 |
|---|---|---|---|---|---|---|---|---|---|---|---|---|---|---|---|---|---|---|
| **Displacement-Factors for tensile load[1)]** | | | | | | | | | | | | | | | | | | |
| **Uncracked or cracked concrete; Temperature range I, II** | | | | | | | | | | | | | | | | | | |
| $\delta_{N0\text{-Factor}}$ | [mm/(N/mm²)] | 0,07 | 0,08 | 0,09 | 0,09 | 0,10 | 0,10 | 0,11 | 0,11 | 0,12 | 0,12 | 0,12 | 0,13 | 0,13 | 0,13 | 0,14 | 0,14 | 0,15 |
| $\delta_{N\infty\text{-Factor}}$ | | 0,11 | 0,12 | 0,13 | 0,14 | 0,15 | 0,16 | 0,16 | 0,17 | 0,18 | 0,18 | 0,18 | 0,19 | 0,19 | 0,20 | 0,20 | 0,21 | 0,22 |
| **Displacement-Factors for shear load[2)]** | | | | | | | | | | | | | | | | | | |
| **Uncracked or cracked concrete; Temperature range I, II** | | | | | | | | | | | | | | | | | | |
| $\delta_{V0\text{-Factor}}$ | [mm/kN] | 0,18 | 0,15 | 0,12 | 0,10 | 0,09 | 0,08 | 0,07 | 0,07 | 0,06 | 0,06 | 0,06 | 0,05 | 0,05 | 0,05 | 0,04 | 0,04 | 0,04 |
| $\delta_{V\infty\text{-Factor}}$ | | 0,27 | 0,22 | 0,18 | 0,16 | 0,14 | 0,12 | 0,11 | 0,10 | 0,09 | 0,09 | 0,08 | 0,08 | 0,07 | 0,07 | 0,06 | 0,06 | 0,05 |

1) Calculation of effective displacement:

$\delta_{N0} = \delta_{N0\text{-Factor}} \cdot \tau_{Ed}$

$\delta_{N\infty} = \delta_{N\infty\text{-Factor}} \cdot \tau_{Ed}$

($\tau_{Ed}$: Design value of the applied tensile stress)

2) Calculation of effective displacement:

$\delta_{V0} = \delta_{V0\text{-Factor}} \cdot V_{Ed}$

$\delta_{V\infty} = \delta_{V\infty\text{-Factor}} \cdot V_{Ed}$

($V_{Ed}$: Design value of the applied shear force)

**Table C14.2: Displacements** for **fischer rebar anchors FRA**

| fischer rebar anchor FRA | | M12 | M16 | M20 | M24 |
|---|---|---|---|---|---|
| **Displacement-Factors for tensile load[1)]** | | | | | |
| **Uncracked or cracked concrete; Temperature range I, II** | | | | | |
| $\delta_{N0\text{-Factor}}$ | [mm/(N/mm²)] | 0,09 | 0,10 | 0,11 | 0,12 |
| $\delta_{N\infty\text{-Factor}}$ | | 0,13 | 0,15 | 0,16 | 0,18 |
| **Displacement-Factors for shear load[2)]** | | | | | |
| **Uncracked or cracked concrete; Temperature range I, II** | | | | | |
| $\delta_{V0\text{-Factor}}$ | [mm/kN] | 0,12 | 0,09 | 0,07 | 0,06 |
| $\delta_{V\infty\text{-Factor}}$ | | 0,18 | 0,14 | 0,11 | 0,09 |

1) Calculation of effective displacement:

$\delta_{N0} = \delta_{N0\text{-Factor}} \cdot \tau_{Ed}$

$\delta_{N\infty} = \delta_{N\infty\text{-Factor}} \cdot \tau_{Ed}$

($\tau_{Ed}$: Design value of the applied tensile stress)

2) Calculation of effective displacement:

$\delta_{V0} = \delta_{V0\text{-Factor}} \cdot V_{Ed}$

$\delta_{V\infty} = \delta_{V\infty\text{-Factor}} \cdot V_{Ed}$

($V_{Ed}$: Design value of the applied shear force)

**Table C15.1:** Essential characteristics[2)] for the **steel bearing capacity** under tensile / shear load of **fischer anchor rods** and **standard threaded rods** under seismic action performance category **C1 or C2**

| Anchor rod / standard threaded rod | | | | M10 | M12 | M14 | M16 | M20 | M22 | M24 | M27 | M30 |
|---|---|---|---|---|---|---|---|---|---|---|---|---|
| **Bearing capacity under tensile load, steel failure[1)]** | | | | | | | | | | | | |
| **fischer anchor rods and standard threaded rods, performance category C1** | | | | | | | | | | | | |
| Characterstic resistance $N_{Rk,s,eq,C1}$ | Steel zinc plated | Property class | 5.8 | [kN] | 29(27) | 43 | 58 | 79 | 123 | 152 | 177 | 230 | 281 |
| | | | 8.8 | | 47(43) | 68 | 92 | 126 | 196 | 243 | 282 | 368 | 449 |
| | Stainless steel A4 and high corrosion resistant steel C | | 50 | | 29 | 43 | 58 | 79 | 123 | 152 | 177 | 230 | 281 |
| | | | 70 | | 41 | 59 | 81 | 110 | 172 | 212 | 247 | 322 | 393 |
| | | | 80 | | 47 | 68 | 92 | 126 | 196 | 243 | 282 | 368 | 449 |
| **fischer anchor rods and standard threaded rods, performance category C2** | | | | | | | | | | | | |
| Characterstic resistance $N_{Rk,s,eq,C2}$ | Steel zinc plated | Property class | 5.8 | [-] | - | 39 | - | 72 | 108 | - | 177 | - | - |
| | | | 8.8 | | - | 61 | - | 116 | 173 | - | 282 | - | - |
| | Stainless steel A4 and high corrosion resistant steel C | | 50 | | - | 39 | - | 72 | 108 | - | 177 | - | - |
| | | | 70 | | - | 53 | - | 101 | 152 | - | 247 | - | - |
| | | | 80 | | - | 61 | - | 116 | 173 | - | 282 | - | - |
| **Bearing capacity under shear load, steel failure without lever arm[1)]** | | | | | | | | | | | | |
| **fischer anchor rods, performance category C1** | | | | | | | | | | | | |
| Characterstic resistance $V^0_{Rk,s,eq,C1}$ | Steel zinc plated | Property class | 5.8 | [kN] | 15(13) | 21 | 29 | 39 | 61 | 76 | 89 | 115 | 141 |
| | | | 8.8 | | 23(21) | 34 | 46 | 63 | 98 | 122 | 141 | 184 | 225 |
| | Stainless steel A4 and high corrosion resistant steel C | | 50 | | 15 | 21 | 29 | 39 | 61 | 76 | 89 | 115 | 141 |
| | | | 70 | | 20 | 30 | 40 | 55 | 86 | 107 | 124 | 161 | 197 |
| | | | 80 | | 23 | 34 | 46 | 63 | 98 | 122 | 141 | 184 | 225 |
| **Standard threaded rods, performance category C1** | | | | | | | | | | | | |
| Characterstic resistance $V^0_{Rk,s,eq,C1}$ | Steel zinc plated | Property class | 5.8 | [kN] | 11(9) | 15 | 20 | 27 | 43 | 53 | 62 | 81 | 99 |
| | | | 8.8 | | 16(14) | 24 | 32 | 44 | 69 | 85 | 99 | 129 | 158 |
| | Stainless steel A4 and high corrosion resistant steel C | | 50 | | 11 | 15 | 20 | 27 | 43 | 53 | 62 | 81 | 99 |
| | | | 70 | | 14 | 21 | 28 | 39 | 60 | 75 | 87 | 113 | 138 |
| | | | 80 | | 16 | 24 | 32 | 44 | 69 | 85 | 99 | 129 | 158 |
| **fischer anchor rods and standard threaded rods, performance category C2** | | | | | | | | | | | | |
| Characterstic resistance $V^0_{Rk,s,eq,C2}$ | Steel zinc plated | Property class | 5.8 | [-] | - | 14 | - | 27 | 43 | - | 62 | - | - |
| | | | 8.8 | | - | 22 | - | 44 | 69 | - | 99 | - | - |
| | Stainless steel A4 and high corrosion resistant steel C | | 50 | | - | 14 | - | 27 | 43 | - | 62 | - | - |
| | | | 70 | | - | 20 | - | 39 | 60 | - | 87 | - | - |
| | | | 80 | | - | 22 | - | 44 | 69 | - | 99 | - | - |

[1)] Partial factors for performance category C1 or C2 see table C16.2;
for fischer anchor rods FIS A / RGM the factor for steel ductility is 1,0

[2)] Values in brackets are valid for undersized threaded rods with smaller stress area $A_s$ for hot dip galvanized standard threaded rods according to EN ISO 10684:2004+AC:2009.

**Table C16.1:** Essential characteristics for the **steel bearing capacity** under tensile / shear load of **reinforcing bars (B500B)** under seismic action performance category **C1**

| **Nominal diameter of the bar** | | **ϕ** | **10** | **12** | **14** | **16** | **18** | **20** | **22** | **24** | **25** | **26** | **28** | **30** | **32** |
|---|---|---|---|---|---|---|---|---|---|---|---|---|---|---|---|
| **Bearing capacity under tensile load, steel failure[1)]** | | | | | | | | | | | | | | | |
| **Reinforcing bar B500B acc. to DIN 488-2:2009-08, performance category C1** | | | | | | | | | | | | | | | |
| Characterstic resistance | $N_{Rk,s,eq,C1}$ | [kN] | 44 | 63 | 85 | 111 | 140 | 173 | 209 | 249 | 270 | 292 | 339 | 389 | 443 |
| **Bearing capacity under shear load, steel failure without lever arm[1)]** | | | | | | | | | | | | | | | |
| **Reinforcing bar B500B acc. to DIN 488-2:2009-08, performance category C1** | | | | | | | | | | | | | | | |
| Characterstic resistance | $V^0_{Rk,s,eq,C1}$ | [kN] | 15 | 22 | 30 | 39 | 49 | 61 | 74 | 88 | 95 | 102 | 119 | 137 | 155 |

[1)] Partial factors for performance category C1 see table C16.2

**Table C16.2:** **Partial factors** for **fischer anchor rods, standard threaded rods** and **reinforcing bars (B500B)** under seismic action performance category **C1 or C2**

| **Anchor rod / standard threaded rod** | | | | **M10** | **M12** | **M14** | **M16** | **M20** | **M22** | **M24** | **M27** | **M30** |
|---|---|---|---|---|---|---|---|---|---|---|---|---|
| **Nominal diameter of the bar** | | | **ϕ** | **10** | **12** | **14** | **16** | **18** | **20** | **22** | **24** | **25** | **26** | **28** | **30** | **32** |
| **Tensile load, steel failure[1)]** | | | | | | | | | | | | | | | | |
| Partial factor $\gamma_{Ms,N}$ | Steel zinc plated | Property class | 5.8 | [-] | 1,50 | | | | | | | | | | | |
| | | | 8.8 | | 1,50 | | | | | | | | | | | |
| | Stainless steel A4 and high corrosion resistant steel C | | 50 | | 2,86 | | | | | | | | | | | |
| | | | 70 | | 1,50[2)] / 1,87 | | | | | | | | | | | |
| | | | 80 | | 1,60 | | | | | | | | | | | |
| | Reinforcing bar | | B500B | | 1,40 | | | | | | | | | | | |
| **Shear load, steel failure[1)]** | | | | | | | | | | | | | | | | |
| Partial factor $\gamma_{Ms,V}$ | Steel zinc plated | Property class | 5.8 | [-] | 1,25 | | | | | | | | | | | |
| | | | 8.8 | | 1,25 | | | | | | | | | | | |
| | Stainless steel A4 and high corrosion resistant steel C | | 50 | | 2,38 | | | | | | | | | | | |
| | | | 70 | | 1,25[2)] / 1,56 | | | | | | | | | | | |
| | | | 80 | | 1,33 | | | | | | | | | | | |
| | Reinforcing bar | | B500B | | 1,50 | | | | | | | | | | | |

[1)] In absence of other national regulations
[2)] Only admissible for high corrosion resistant steel C, with $f_{yk}$ / $f_{uk}$ ≥ 0,8 and $A_5$ > 12 % (e.g. fischer anchor rods)

**Table C17.1:** Essential characteristics of **resistance** for **fischer anchor rods** and **standard threaded rods** in hammer drilled holes under seismic action performance category **C1; service life time 50 and 100 years**

| **Anchor rod / standard threaded rod** | | | | **M10** | **M12** | **M14** | **M16** | **M20** | **M22** | **M24** | **M27** | **M30** |
|---|---|---|---|---|---|---|---|---|---|---|---|---|
| **Characteristic bond resistance, combined pullout and concrete cone failure** | | | | | | | | | | | | |
| **Hammer-drilling with standard drill bit or hollow drill bit (dry or wet concrete)** | | | | | | | | | | | | |
| Temperature range | I: 35 °C / 60 °C | $\tau_{Rk,eq,C1}$ | [N/mm²] | 7,0 | 7,0 | 6,7 | 6,0 | 5,7 | 6,7 | 6,7 | 6,7 | 6,7 |
| | II: 50 °C / 72 °C | | | 7,0 | 7,0 | 6,7 | 5,7 | 5,7 | 6,7 | 6,7 | 6,7 | 6,7 |
| **Hammer-drilling with standard drill bit or hollow drill bit (water filled hole)** | | | | | | | | | | | | |
| Temperature range | I: 35 °C / 60 °C | $\tau_{Rk,eq,C1}$ | [N/mm²] | 7,5 | 7,5 | 6,5 | 5,7 | 5,7 | 5,7 | 5,7 | 5,7 | 5,7 |
| | II: 50 °C / 72 °C | | | 6,8 | 6,8 | 6,5 | 5,7 | 5,7 | 5,7 | 5,7 | 5,7 | 5,7 |
| **Installation factors** | | | | | | | | | | | | |
| **tensile load** | | | | | | | | | | | | |
| Dry or wet concrete | | $\gamma_{inst}$ | [-] | 1,0 | | | | | | | | |
| Water filled hole | | | | 1,2 | | | | 1,4 | | | | |
| **shear load** | | | | | | | | | | | | |
| All installation conditions | | $\gamma_{inst}$ | [-] | 1,0 | | | | | | | | |

**Table C17.2:** Essential characteristics of **resistance** for **reinforcing bars** in hammer drilled holes under seismic action performance category **C1; service life time 50 and 100 years**

| **Nominal diameter of the bar** | | | **ϕ** | **10** | **12** | **14** | **16** | **18** | **20** | **22** | **24** | **25** | **26** | **28** | **30** | **32** |
|---|---|---|---|---|---|---|---|---|---|---|---|---|---|---|---|---|
| **Characteristic bond resistance, combined pullout and concrete cone failure** | | | | | | | | | | | | | | | | |
| **Hammer-drilling with standard drill bit or hollow drill bit (dry or wet concrete)** | | | | | | | | | | | | | | | | |
| Temperature range | I: 35 °C / 60 °C | $\tau_{Rk,eq,C1}$ | [N/mm²] | 7,0 | 7,0 | 6,7 | 5,7 | 5,7 | 5,7 | 6,7 | 6,7 | 6,7 | 6,7 | 6,7 | 6,7 | 4,8 |
| | II: 50 °C / 72 °C | | | 7,0 | 7,0 | 6,7 | 5,7 | 5,7 | 5,7 | 6,7 | 6,7 | 6,7 | 6,7 | 6,7 | 6,7 | 4,8 |
| **Hammer-drilling with standard drill bit or hollow drill bit (water filled hole)** | | | | | | | | | | | | | | | | |
| Temperature range | I: 35 °C / 60 °C | $\tau_{Rk,eq,C1}$ | [N/mm²] | 7,5 | 6,5 | 6,5 | 5,7 | 5,7 | 5,7 | 5,7 | 5,7 | 5,7 | 5,7 | 5,7 | 5,7 | 4,8 |
| | II: 50 °C / 72 °C | | | 6,5 | 6,5 | 5,8 | 5,8 | 5,7 | 5,7 | 5,7 | 5,7 | 5,7 | 5,7 | 5,7 | 5,7 | 4,8 |
| **Installation factors** | | | | | | | | | | | | | | | | |
| **Tensile load** | | | | | | | | | | | | | | | | |
| Dry or wet concrete | | $\gamma_{inst}$ | [-] | 1,0 | | | | | | | | | | | | |
| Water filled hole | | | | 1,2 | | | | | 1,4 | | | | | | | |
| **Shear load** | | | | | | | | | | | | | | | | |
| All installation conditions | | $\gamma_{inst}$ | [-] | 1,0 | | | | | | | | | | | | |

**Table C18.1:** Essential characteristics of **resistance** for **fischer anchor rods** and **standard threaded rods** in hammer drilled holes under seismic action performance category **C2; service life time 50 and 100 years**

| **Anchor rod / standard threaded rod** | | | | **M12** | **M16** | **M20** | **M24** |
|---|---|---|---|---|---|---|---|
| **Characteristic bond resistance, combined pullout and concrete cone failure** | | | | | | | |
| **Hammer-drilling with standard drill bit or hollow drill bit (dry or wet concrete)** | | | | | | | |
| Temperature range | I: 35 °C / 60 °C | $\tau_{Rk,eq,C2}$ | [N/mm²] | 3,5 | 5,8 | 5,0 | 3,1 |
| | II: 50 °C / 72 °C | | | 3,3 | 5,5 | 4,7 | 2,9 |
| **Hammer-drilling with standard drill bit or hollow drill bit (water filled hole)** | | | | | | | |
| Temperature range | I: 35 °C / 60 °C | $\tau_{Rk,eq,C2}$ | [N/mm²] | 3,5 | 5,8 | 5,0 | 3,1 |
| | II: 50 °C / 72 °C | | | 3,3 | 5,5 | 4,7 | 2,9 |
| **Installation factors** | | | | | | | |
| **Tensile load** | | | | | | | |
| Dry or wet concrete | | $\gamma_{inst}$ | [-] | 1,0 | | | |
| Water filled hole | | | | 1,2 | | 1,4 | |
| **Shear load** | | | | | | | |
| All installation conditions | | $\gamma_{inst}$ | [-] | 1,0 | | | |
| **Displacement-Factors for tensile load[1)]** | | | | | | | |
| $\delta_{N,(DLS)\text{-Factor}}$ | | [mm/(N/mm²)] | | 0,09 | 0,10 | 0,11 | 0,12 |
| $\delta_{N,(ULS)\text{-Factor}}$ | | | | 0,15 | 0,17 | 0,17 | 0,18 |
| **Displacement-Factors for shear load[2)]** | | | | | | | |
| $\delta_{V,(DLS)\text{-Factor}}$ | | [mm/kN] | | 0,18 | 0,10 | 0,07 | 0,06 |
| $\delta_{V,(ULS)\text{-Factor}}$ | | | | 0,25 | 0,14 | 0,11 | 0,09 |

1) Calculation of effective displacement:

$\delta_{N,(DLS)} = \delta_{N,(DLS)\text{-Factor}} \cdot \tau_{Ed}$

$\delta_{N,(ULS)} = \delta_{N,(ULS)\text{-Factor}} \cdot \tau_{Ed}$

($\tau_{Ed}$: Design value of the applied tensile stress)

2) Calculation of effective displacement:

$\delta_{V,(DLS)} = \delta_{V,(DLS)\text{-Factor}} \cdot V_{Ed}$

$\delta_{V,(ULS)} = \delta_{V,(ULS)\text{-Factor}} \cdot V_{Ed}$

($V_{Ed}$: Design value of the applied shear force)