# DECLARAÇÃO DE DESEMPENHO

## DoP 0228

para perfil de ancoragem FES com parafuso de calha FBC (perfil de ancoragem para uso em betão) PT

1. Código de identificação único do produto-tipo: **DoP 0228**

2. Utilização(ões) prevista(s): **Perfil de ancoragem para uso em betão fissurado e não-fissurado.**
**Ver anexoss, especialmente anexos B1- B8**

3. Fabricante: **fischerwerke GmbH & Co. KG, Klaus-Fischer-Str. 1, 72178 Waldachtal, Alemanha**

4. Representante autorizado: **–**

5. Sistema(s) de avaliação e verificação da regularidade do desempenho (AVCP): **1**

6. Documento de Avaliação Europeu: **EAD 330008-03-0601**
Avaliação Técnica Europeia: **ETA-18/0862; 2020-06-16**
Organismo de Avaliação Técnica: **DIBt- Deutsches Institut für Bautechnik**
Organismo(s) notificado(s): **1343 MPA Darmstadt / 2873 TU Darmstadt**

7. Desempenho(s) declarado(s):
**Resistência mecânica e estabilidade (BWR 1)**

| | | |
|---|---|---|
| Caracteristicas de resistência à tração (para acção estática e quase-estática): | Resistência à rotura do aço das ancoragens: | Anexo C1 |
| | Resistência à rotura do aço da ligação entre as ancoragens e o perfil: | Anexo C1 |
| | Resistência à rotura do aço das ranhuras do perfil e subsequentemente arrancamento do parafuso de | Anexo C1 |
| | Resistência à rotura do aço do parafuso de perfil: | Anexo C5 |
| | Resistência à rotura do aço por excesso da resistência à flexão do perfil: | Anexo C1 |
| | Máximo torque de instalação para evitar danos durante instalação: | Anexo B4 |
| | Resistência à rotura por arranque das ancoragens: | Anexo C2 |
| | Resistência à rotura por cone de betão: | Anexos B3, C2 |
| | mínimo valor de distância ao bordo, espaçamento e espessura do membro de betão para prevenir rotura por fendilhação durante instalação: | Anexo B3 |
| | Distância ao bordo e espaçamento caracteristico para prevenir rotura por fendilhação do betão sob carga: | Anexo C2 |
| | Resistência à rotura "blow-out" - zona resistente da cacbeça: | Anexo A4 |
| Caracteristicas de resistência ao corte (para acção estática e quase-estática): | Resistência à rotura do aço do parafuso sob corte sem braço de alavanca: | Anexo C5 |
| | Resistência à rotura do aço por flexão do parafuso do perfíl sob corte com braço de alavanca: | Anexo C6 |
| | Resistência à rotura do aço das ranhuras do perfil, à rotura do aço da ligação entre as ancoragens e o perfil e à rotura do aço do perfil de ancoragem (corte na direção transversa): | Anexo C3 |
| | Resistência à rotura do aço da ligação entre as ranhuras do perfil e o parafuso de perfil: (corte na direção longitudinal do perfil): | Anexo C3 |
| | Fator de sensibilidade da instalação: | NPD |
| | Resistência à rotura do aço da ancoragens: | Anexo C3 |
| | Resistência à rotura do aço da ligação entre as ancoragens e o perfil: | Anexo C3 |
| | Resistência do betão ao destacamento: | Anexo C4 |
| | Resistência do bordo do betão: | Anexo C4 |
| | Resistência à rotura do aço do perfil: | Anexo C4 |
| | Durabilidade: | Anexos A4, B1 |
| | Deslocamentos: | Anexos C2, C4 |
| Resistência característica sob carga de tração de fadiga: | NPD | |

**Segurança em caso de incêndio (BWR 2)**

| | |
|---|---|
| Reação ao fogo: | Classe (A1) |
| Resistência ao fogo: | NPD |

8. Documentação Técnica Adequada e/ou Documentação Técnica Específica: -

O desempenho do produto identificado acima está em conformidade com o conjunto de desempenhos declarados. A presente declaração de desempenho é emitida, em conformidade com o Regulamento (UE) n.o 305/2011, sob a exclusiva responsabilidade do fabricante identificado acima.

Assinado por e em nome do fabricante por:

ppa.

i.V.

Thilo Pregartner, Dr.-Ing.

Peter Schillinger, Dipl.-Ing.

Tumlingen, 2020-06-30

Este DoP foi preparado em diferentes línguas. Em caso de litígio sobre a interpretação, a versão em inglês prevalecerá sempre.

O Anexo inclui informações voluntárias e complementares em inglês que excedem os requisitos legais (linguisticamente especificados).

## Specific Part

### 1 Technical description of the product

The fischer Anchor Channel FES with fischer Channel Bolts FBC is a system consisting of a C-shaped channel profile of steel and at least two metal anchors non-detachably fixed on the channel back and fischer Channel Bolts.

The anchor channel is embedded surface-flush in the concrete. fischer Channel Bolts with appropriate hexagonal nuts and washers are fixed to the channel.

The product description is given in Annex A.

### 2 Specification of the intended use in accordance with the applicable European Assessment Document

The performances given in Section 3 are only valid if the anchor channel is used in compliance with the specifications and conditions given in Annex B.

The verifications and assessment methods on which this European Technical Assessment is based lead to the assumption of a working life of the anchor channel of at least 50 years. The indications given on the working life cannot be interpreted as a guarantee given by the producer, but are to be regarded only as a means for choosing the right products in relation to the expected economically reasonable working life of the works.

### 3 Performance of the product and references to the methods used for its assessment

#### 3.1 Mechanical resistance and stability (BWR 1)

| Essential characteristic | Performance |
|---|---|
| Characteristic resistance under tension loading (static and quasi-static loading) | See Annex A4 and A5, Annex B3 and B4, Annex C1, C2 and C5 |
| Characteristic resistance under shear loading (static and quasi-static loading) | See Annex C3 to C6 |
| Characteristic resistance under combined tension and shear loading (static and quasi-static loading) | See Annex C4 |
| Characteristic resistances under fatigue tension loading | No performance assessed |
| Displacements (static and quasi-static loading) | See Annex C2 and C4 |
| Durability | See Annex B1 |

## 3.2 Safety in case of fire (BWR 2)

| Essential characteristic | Performance |
|---|---|
| Reaction to fire | Class A1 |
| Characteristic resistance to fire | No performance assessed |

## 4 Assessment and verification of constancy of performance (AVCP) system applied, with reference to its legal base

In accordance with EAD No. 330008-03-0601, the applicable European legal act is: [2000/273/EC].

The system to be applied is: 1

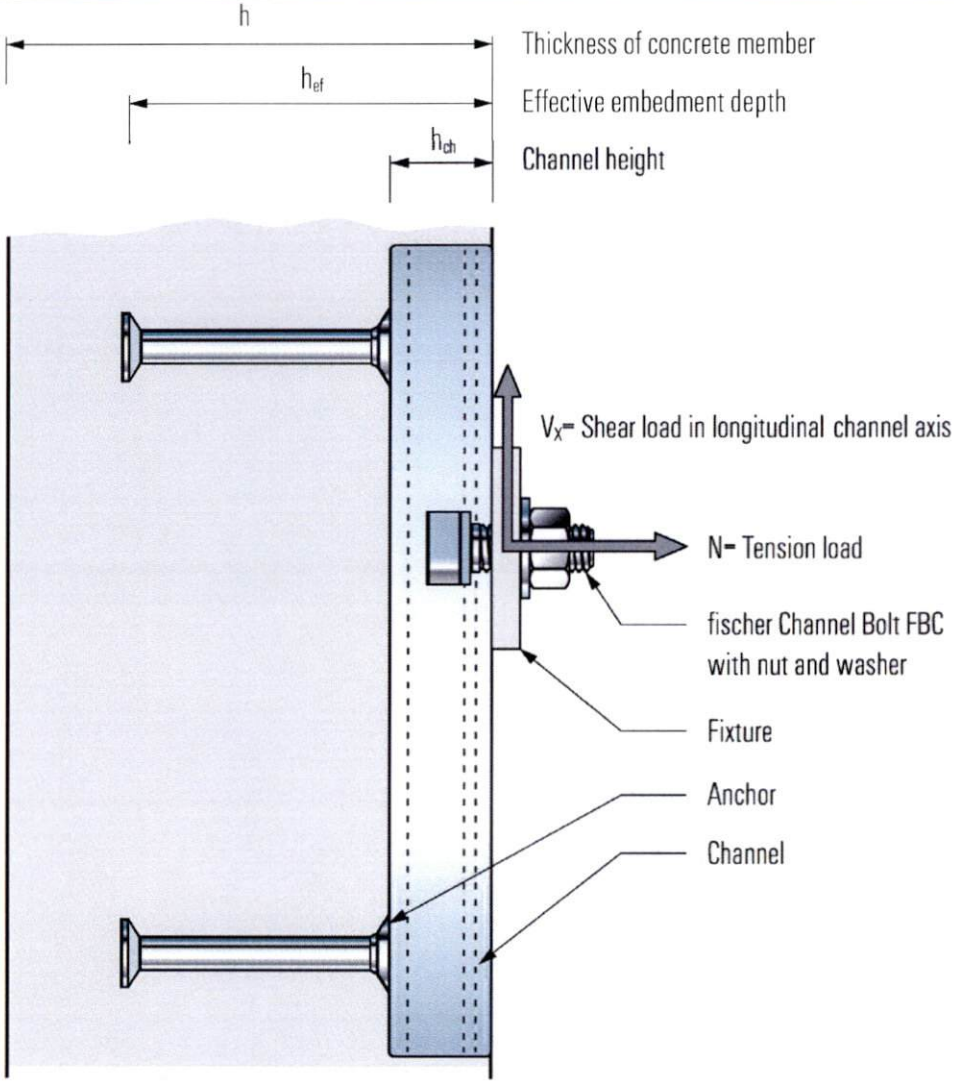


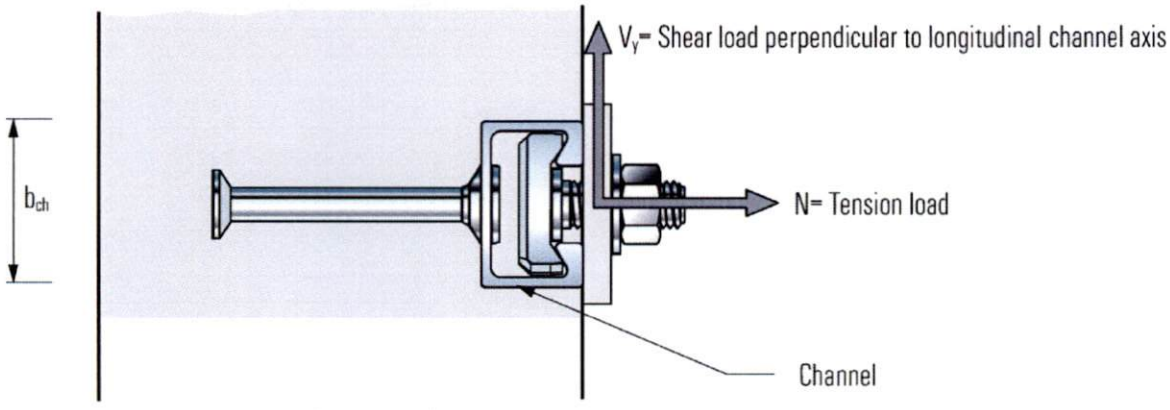


**fischer Anchor Channel FES with fischer Channel Bolts FBC**

**Product Description**
Installed condition

Annex A1

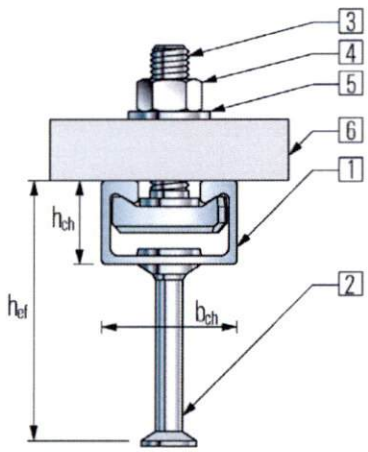


Round anchor

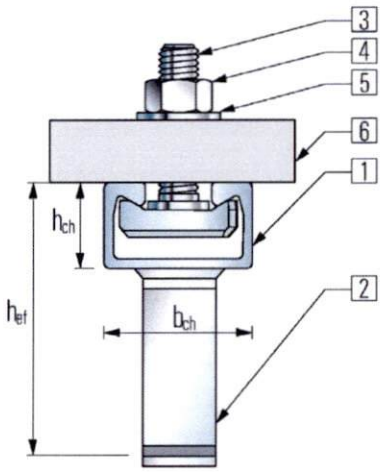


I-anchor

fischer Anchor Channel FES
1 Channel profile
2 Anchor
3 Channel bolt
4 Hexagonal nut
5 Washer
6 Fixture

## Marking of the fischer anchor channel FES:

e. g.: I-50/30

= Identifying mark of the manufacturer

I = Additional marking for I-anchors
No marking for round anchors

50/30 = Anchor channel size
(29/20; 38/23; 40/22; 50/30; 52/34, 28/15; 38/17; 40/25; 49/30; 54/33)

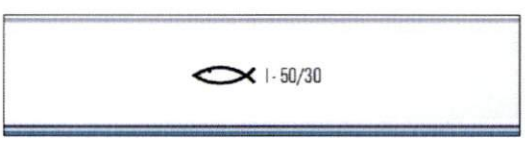


Stamped into back of channel
Optional: printed on channel web or channel lips
H = Hot rolled channel, C = Cold formed channel
No marking for material acc. A7 Table 6 (Channel profile)

## Marking of the fischer channel bolt FBC:

e. g.: 5030 8.8

= Identifying mark of the manufacturer

5030 = Type of channel bolt

8.8 = Steel grade

N = Notching channel bolt (if applicable)

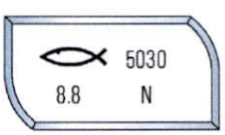


Marking of channel bolt type (smooth, serrated, notching head) according to Annex A6

**fischer Anchor Channel FES with fischer Channel Bolts FBC**

**Product Description**
Marking and materials

Annex A2

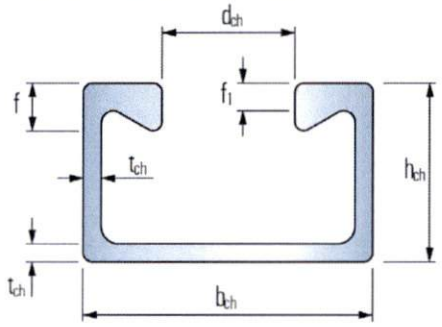


FES-H-(I-)40/22, -50/30, -52/34

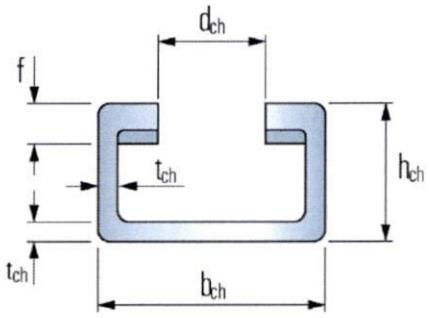


FES-H-S-29/20, -38/23 (serrated)

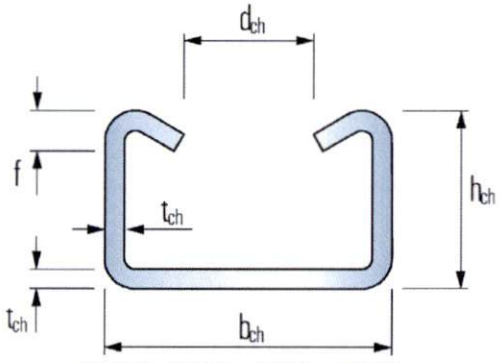


FES-C-40/25, -49/30, -54/33

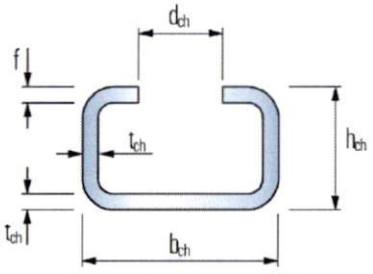


FES-C-28/15, -38/17

**Table 1: Dimensions of hot-rolled and cold-formed channel profile**

| Anchor Channel FES- | $b_{ch}$ [mm] | $h_{ch}$ [mm] | $t_{ch}$ [mm] | $d_{ch}$ [mm] | f [mm] | $f_1$ [mm] | $I_y$ [mm⁴] |
|---|---|---|---|---|---|---|---|
| C-28/15 | 28,0 | 15,5 | 2,3 | 12,0 | 2,3 | - | 4280 |
| C-38/17 | 38,0 | 17,3 | 3,0 | 18,0 | 3,0 | - | 8240 |
| C-40/25 | 40,0 | 25,0 | 2,8 | 18,0 | 6,0 | - | 20340 |
| C-49/30 | 50,0 | 30,0 | 3,3 | 22,0 | 7,0 | - | 43080 |
| C-54/33 | 54,0 | 33,0 | 5,0 | 22,0 | 8,5 | - | 74090 |
| H-S-29/20 | 30,0 | 20,0 | 3,0 | 14,0 | 5,2 | - | 11150 |
| H-S-38/23 | 38,0 | 23,0 | 3,3 | 18,0 | 6,0 | - | 21070 |
| H-(I-)40/22 | 40,0 | 23,5 | 2,6 | 18,0 | 6,2 | 3,6 | 21660 |
| H-(I-)50/30 | 50,0 | 30,0 | 3,0 | 22,5 | 8,1 | 5,5 | 54960 |
| H-(I-)52/34 | 52,5 | 34,0 | 4,0 | 22,5 | 11,5 | 8,3 | 96330 |

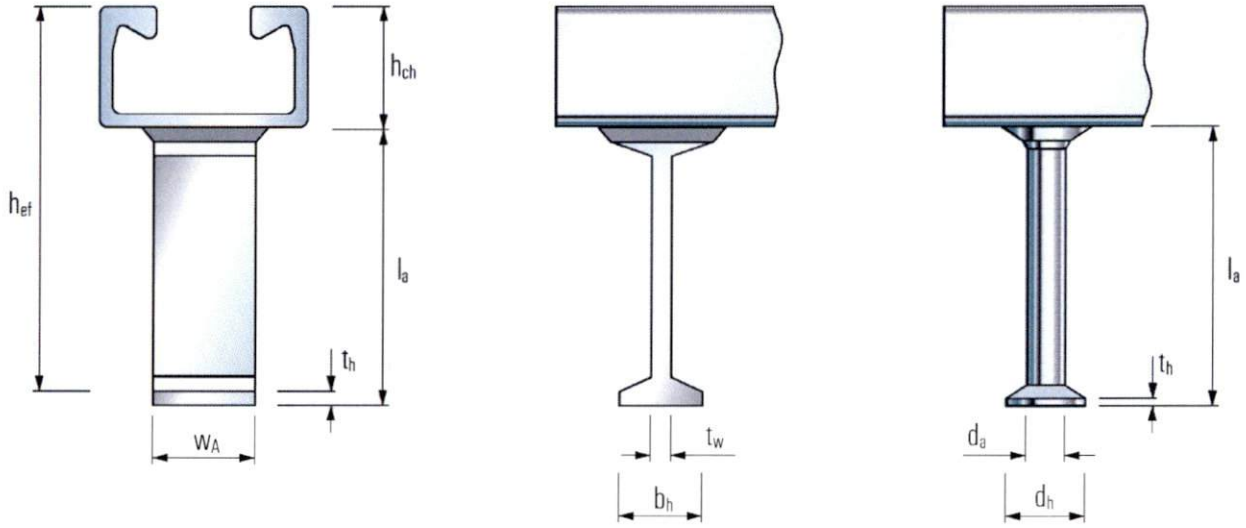


**Table 2: Dimensions of anchor (welded I-anchor or forged round anchor)**

| Anchor Channel FES - | I-anchor | | | | | | Round anchor | | | | |
|---|---|---|---|---|---|---|---|---|---|---|---|
| | $l_{a,min}$ [mm] | $t_{w,min}$ [mm] | $b_{h,min}$ [mm] | $t_h$ [mm] | $w_A$ [mm] | $A_{h,min}$ [mm²] | $l_{a,min}$ [mm] | $d_a$ [mm] | $d_h$ [mm] | $t_h$ [mm] | $A_h$ [mm²] |
| C-28/15 | - | - | - | - | - | - | 31,0 | 6 | 12,0 | 1,3 | 85 |
| C-38/17 | - | - | - | - | - | - | 60,8 | 8 | 16,0 | 2,0 | 151 |
| C-40/25 | - | - | - | - | - | - | 56,0 | 8 | 16,0 | 2,0 | 151 |
| C-49/30 | - | - | - | - | - | - | 66,0 | 10 | 20,0 | 2,2 | 236 |
| C-54/33 | - | - | - | - | - | - | 124,5 | 11 | 24,3 | 2,5 | 369 |
| H-S-29/20 | - | - | - | - | - | - | 59,5 | 10 | 20,0 | 2,5 | 236 |
| H-S-38/23 | - | - | - | - | - | - | 76,2 | 10 | 20,0 | 2,2 | 236 |
| H-(I-)40/22 | 62 | 5 | 20 | 5 | 20 | 300 | 68,5 | 8 | 16,0 | 2,0 | 151 |
| H-(I-)50/30 | 69 | 5 | 20 | 5 | 25 | 375 | 66,2 | 10 | 20,0 | 2,2 | 236 |
| H-(I-)52/34 | 126 | 5 [1)] | 20 [1)] | 5 | 40 | 600 | 123,5 | 11 | 24,3 | 2,5 | 369 |

[1)] Alternative I-anchor: $t_w$ = 6 mm, $b_h$ = 25 mm

**Table 3: Dimensions of Anchor Channels FES-**

| Anchor channel FES- | Anchor type | $s_{min}$ [mm] | $s_{max}$ [mm] | $x_{min}$ [mm] | $x_{max}$ [mm] | $l_{min}$ [mm] | $l_{max}$ [mm] |
|---|---|---|---|---|---|---|---|
| C-28/15 | round | 100 | 200 | 25 | 35 | 150 | 6.070 |
| C-38/17 | | | | | | | |
| C-40/25 | | | 250 | | | | |
| C-49/30 | | | | | | | |
| C-54/33 | | | | | | | |
| H-S-29/20 | | | 200 | | | | |
| H-S-38/23 | | | 250 | | | | |
| H-(I-)40/22 | round or I | | | | | | |
| H-(I-)50/30 | round or I | | | | | | |
| H-I-52/34 | I | | | | | | |
| H-52/34 | round | | | 35 | | 170 | |

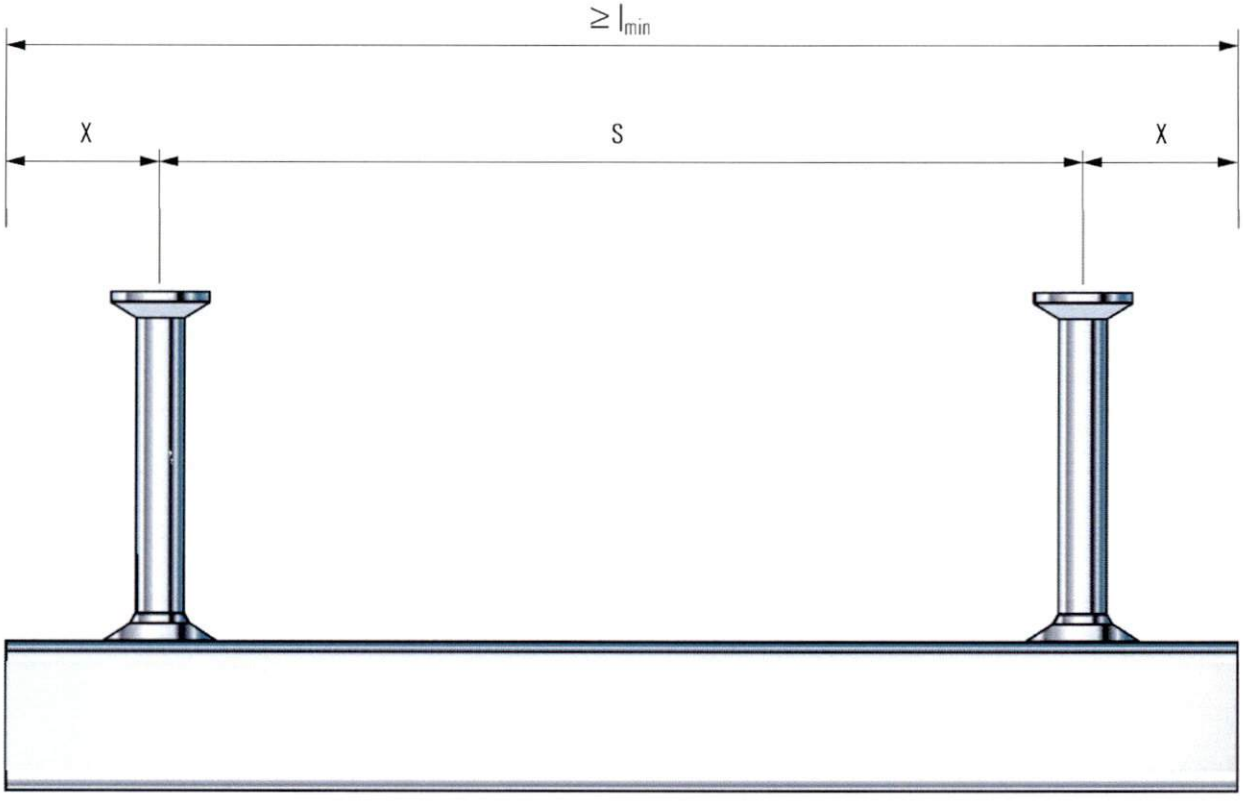


**fischer Anchor Channel FES with fischer Channel Bolts FBC**

**Product Description**
Anchor position and channel length

Annex A5

**Table 4: Steel grade and corrosion class**

| Channel Bolt | Carbon steel [1] |
|---|---|
| Steel grade | 8.8 |
| $f_{uk}$ [N/mm²] | 800 / 830 |
| $f_{yk}$ [N/mm²] | 640 / 660 [2] |
| Corrosion protection | G [3] F [4] |

[1] Material properties according to Annex A7
[2] Material properties according to EN ISO 898-1
[3] Electroplated
[4] Hot-dip galvanized

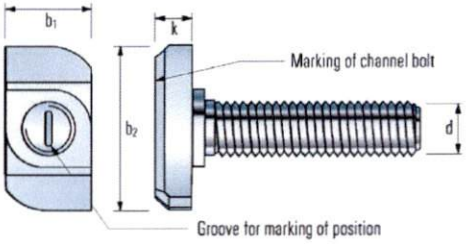


Channel Bolt FBC-28/15, FBC-38/17

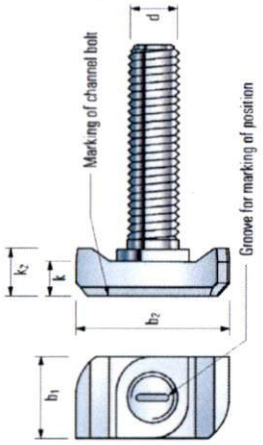


Channel Bolt
FBC-40/22, FBC-50/30

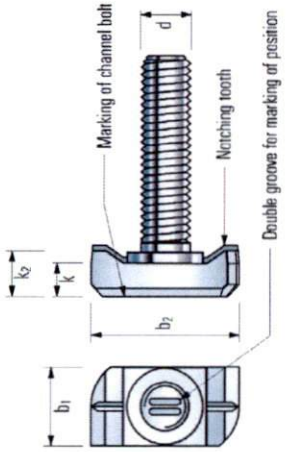


Notching Channel Bolt
FBC-N-50/30-M20

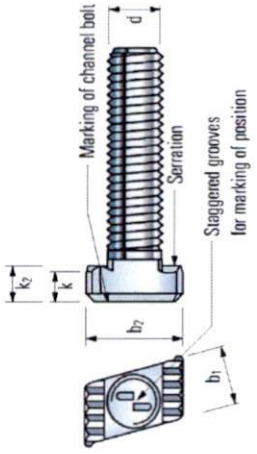


Serrated Channel Bolt
FBC-S-29/20, FBC-S-38/23

**Table 5: Dimensions of fischer Channel Bolts FBC and matching fischer Anchor Channels FES**

| Anchor Channel FES- | Channel Bolt FBC- | Dimensions | | | | |
|---|---|---|---|---|---|---|
| | | Thread d | b1 [mm] | b2 [mm] | k [mm] | k2 [mm] |
| C-28/15 | 28/15 | M8 | 11 | 22,2 | 5 | - |
| | | M10 | | | 5 | - |
| | | M12 | | | 7 | - |
| C-38/17 | 38/17 | M10 | 16 | 30 | 6 | - |
| | | M12 | | | 7 | - |
| H-S-29/20 | S-29/20 | M12 | 13 | 22 | 6,5 | 8 |
| H-S-38/23<br>C-38/17 | S-38/23 | M12 | 16,7 | 29,1 | 5,8 | 7,3 |
| | | M16 | | | | |
| H(-I)-40/22<br>C-40/25 | 40/22 | M10 | 14 | 32,5 | 8 | 11 |
| | | M12 | 14 | | | |
| | | M16 | 17 | | | |
| C-49/30<br>H(-I)-50/30<br>C-54/33<br>H(-I)-52/34 | 50/30 | M10 | 17,1 | 40,5 | 9 | 11,5 |
| | | M12 | 17,1 | | 10 | 12,5 |
| | | M16 | 17,1 | | 11 | 13,5 |
| | | M20 | 20,5 | | 12 | 14,5 |
| H(-I)-50/30<br>H(-I)-52/34 | N-50/30 | M20 | 21 | 40,5 | 12 | 16 |

**Table 6: Materials and properties**

| Component | Steel | | |
|---|---|---|---|
| | Mechanical properties | Coating | Coating |
| 1 | 2a | 2b | 2c |
| Channel profile | 1.0038, 1.0044 acc. to EN 10025:2004 1.0976, 1.0979 acc. to EN 10149:2013 | Hot dip galvanized ≥ 50 µm acc. to EN ISO 10684:2004 + AC:2009 | Hot dip galvanized ≥ 50 µm acc. to EN ISO 10684:2004 + AC:2009 |
| Anchor | 1.0038, 1.0213, 1.0214 acc. to EN 10025:2004 1.5525, 1.5535 acc. to EN 10263:2017 1.5523 | Hot dip galvanized ≥ 50 µm acc. to EN ISO 10684:2004 + AC:2009 | Hot dip galvanized ≥ 50 µm acc. to EN ISO 10684:2004 + AC:2009 |
| Channel bolt | Steel grade 8.8 acc. to EN ISO 898-1:2013 | Electroplated acc. to EN ISO 4042:2018 | Hot dip galvanized ≥ 50 µm acc. to EN ISO 10684:2004 + AC:2009 |
| Plain washer [1] acc. to EN ISO 7089:2000 and EN ISO 7093-1:2000 | Hardness class A ≥ 200 HV | Electroplated acc. to EN ISO 4042:2018 | Hot dip galvanized ≥ 50 µm acc. to EN ISO 10684:2004 + AC:2009 |
| Hexagonal nut acc. to EN ISO 4032:2012 | Property class 5 or 8 acc. to EN ISO 898-2:2012 | Electroplated acc. to EN ISO 4042:2018 | Hot dip galvanized ≥ 50 µm acc. to EN ISO 10684:2004 + AC:2009 |

[1] Not in the scope of delivery

## Specification of intended use

**Anchor channels and channel bolts subject to:**

- Static and quasi-static loads in tension and shear perpendicular to the longitudinal axis of the channel for FES in combination with channel bolt FBC.
- Static and quasi-static loads in tension and shear, shear perpendicular to the longitudinal axis of the channel and shear in the direction of the longitudinal axis of the channel for FES-H(-I)-50/30 or FES-H(-I)-52/34 in combination with notching channel bolt FBC-N-50/30-M20
- Static and quasi-static loads in tension and shear, shear perpendicular to the longitudinal axis of the channel and shear in the direction of the longitudinal axis of the channel for serrated anchor channels FES-H-S in combination with serrated channel bolts FBC-S.

**Base materials:**

- Reinforced or unreinforced normal weight concrete according to EN 206-1:2000.
- Strength classes C12/15 to C90/105 according to EN 206-1:2000
- Cracked or uncracked concrete.

**Use conditions (Environmental conditions):**

- Structures subject to dry internal conditions (e.g. accommodations, bureaus, schools, hospitals, shops, exceptional internal conditions with usual humidity)
  (anchor channels and channel bolts according to Annex A7, Table 6, column 2b and 2c).
- Structures subject to internal conditions with usual humidity (e.g. kitchens, bathrooms and laundries in residential buildings, exceptional permanent damp conditions and application under water)
  (anchor channels and channel bolts according to Annex A7, Table 6, column 2c).

**Design:**

- Anchor channels are designed under the responsibility of an engineer experienced in anchorages and concrete work.
- Verifiable calculation notes and drawings are prepared taking account of the loads to be anchored. The position of the anchor channel and channel bolts are indicated on the design drawings (e.g. position of the anchor channel relative to the reinforcement or to supports).
- For static and quasi-static loading as well as fire exposure the anchor channels have to be designed in accordance with EOTA TR 047 "Calculation Method for the Performance of Anchor Channels", March 2018 or EN 1992-4:2018.
- The characteristic resistances are calculated with the minimum effective embedment depth.

**Installation:**

- The installation of anchor channels is carried out by appropriately qualified personnel under the supervision of the person responsible for the technical matters on site.
- Use of the anchor channels only as supplied by the manufacturer - without any manipulations, repositioning or exchanging of channel components.
- Cutting of anchor channels is allowed only if pieces according to Annex A5, Table 3 are generated including end spacing x and minimum channel length $l_{min}$ and only to be used in dry internal conditions.
- Installation in accordance with the installation instruction given in Annexes B5, B6, B7 or B8.
- The anchor channels are fixed on the formwork, reinforcement or auxiliary construction such that no movement of the channels will occur during the time of laying the reinforcement and of placing and compacting the concrete.
- The concrete around the head of the anchors is properly compacted. The channels are protected from penetration of concrete into the internal space of the channels.
- Washers may be chosen according to Annex A7 and provided separately by the user.
- Orientating the channel bolt (groove according to Annex B6, B7 and B8) rectangular to the channel axis.
- The required installation torque given in Annex B4 must be applied and must not be exceeded.
- Notching channel bolts FBC-N-50/30 may be used only once after applying the installation torque $T_{inst,s}$.

**Table 7: Installation parameters**

| Anchor Channel FES- | | | C-28/15 | C-38/17 | H-S-29/20 | H-S-38/23 | C-40/25<br>H-40/22<br>H-I-40/22 | C-49/30<br>H-50/30<br>H-I-50/30 | C-54/33<br>H-52/34<br>H-I-52/34 |
|---|---|---|---|---|---|---|---|---|---|
| Minimum effective embedment depth | $h_{ef,min}$ | [mm] | 45 | 76 | 77 | 97 | 79<br>90<br>79 | 94<br>94<br>94 | 155<br>155<br>155 |
| Minimum edge distance | $c_{min}$ | | 40 | 50 | 75 | 100 | 50<br>50<br>50 | 75<br>75<br>75 | 100<br>100<br>100 |
| Minimum thickness of concrete member | $h_{min}$ [1)] | | 70 | 100 | 100 | 100 | 100<br>100<br>100 | 100<br>100<br>100 | 160<br>160<br>170 |

[1)] $h_{min} = h_{ef} + t_h + c_{nom}$; $c_{nom}$ according to EN 1992-1-1:2004 + AC:2010

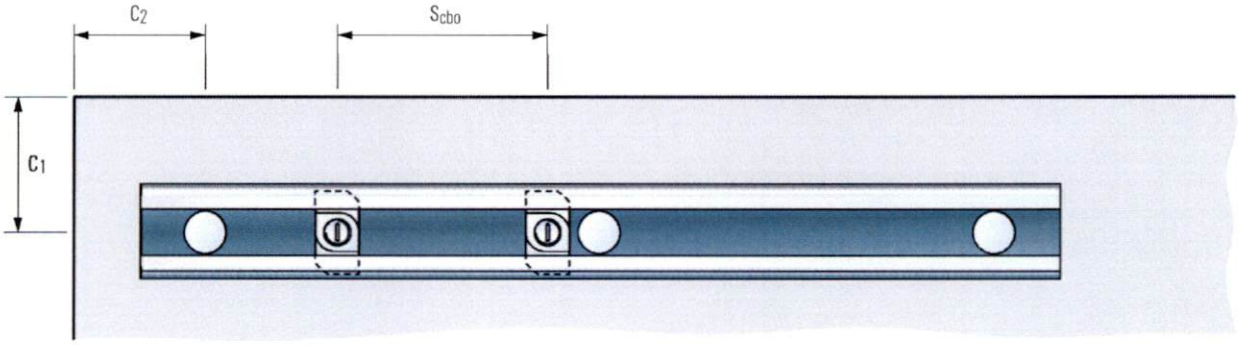


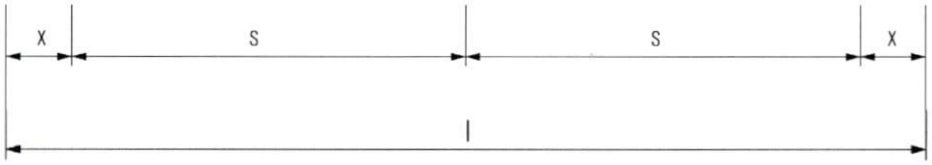


**Table 8: Minimum spacing for channel bolts**

| Channel bolt | | | M8 | M10 | M12 | M16 | M20 |
|---|---|---|---|---|---|---|---|
| Minimum spacing between channel bolts | $s_{cbo,min}$ | [mm] | 40 | 50 | 60 | 80 | 100 |

**Table 9: Required installation torque $T_{inst}$**

| fischer Anchor channel FES- | fischer Channel Bolt FBC- | | $T_{inst}$ [1] [Nm] General $T_{inst,g}$ | Steel - steel contact $T_{inst,s}$ |
|---|---|---|---|---|
| C-28/15 | 28/15 | M8 | 7 | 15 |
| | | M10 | 10 | 30 |
| | | M12 | 13 | 45 |
| C-38/17 | 38/17 | M10 | 15 | 30 |
| | | M12 | 20 | 45 |
| H-S-29/20 | S-29/20 | M12 | 80 | 80 |
| H-S-38/23 | S-38/23 | M12 | 80 | 80 |
| | | M16 | 100 | 100 |
| C-38/17 | | M12 | 40 | 80 |
| | | M16 | 50 | 100 |
| H(-I)-40/22<br>C-40/25 | 40/22 | M10 | 15 | 30 |
| | | M12 | 25 | 45 |
| | | M16 | 50 | 100 |
| C-49/30<br>H(-I)-50/30<br>C-54/33<br>H(-I)-52/34 | 50/30 | M10 | 15 | 30 |
| | | M12 | 25 | 45 |
| | | M16 | 60 | 100 |
| | | M20 | 75 | 230 |
| H(-I)-50/30, H(-I)-52/34 | N-50/30 | M20 | -[2] | 400 |

[1] $T_{inst}$ must not be exceeded

[2] No performance assessed

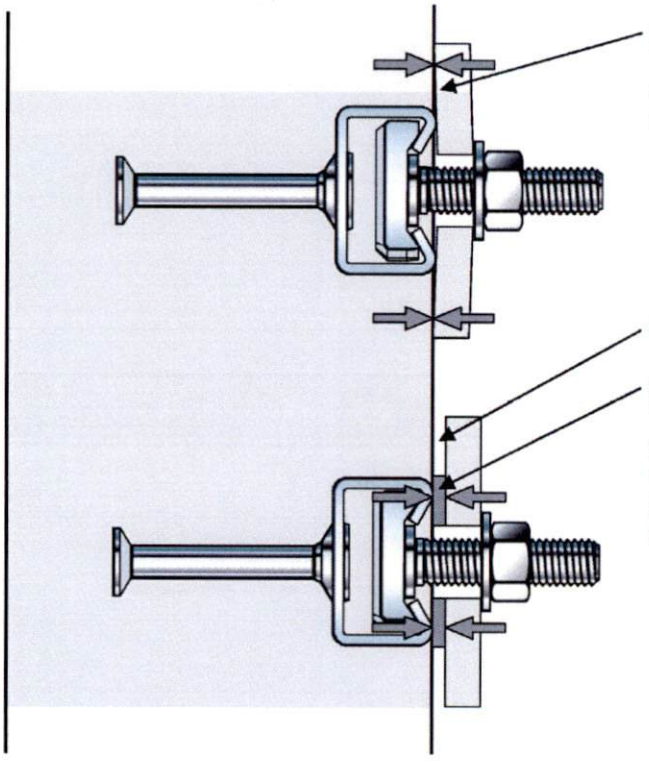


**fischer Anchor Channel FES with fischer Channel Bolts FBC**

**Intended Use**
Installation parameters for fischer Channel Bolts FBC

Annex B4

fischer

# Anchor Channel FES

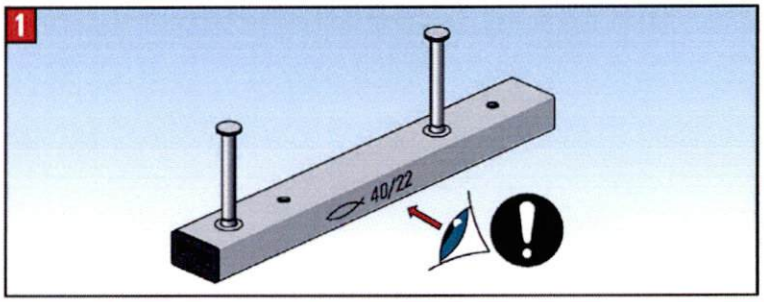


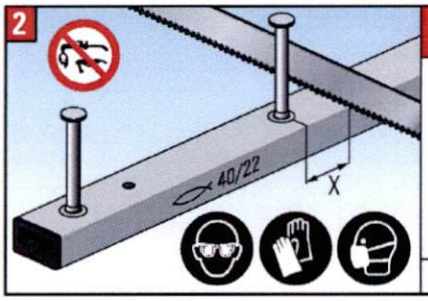


| X | FES - H - | FES - C - |
|---|---|---|
| 25 - 35 mm | S - 29 / 20 | 28 / 15 |
| | S - 38 / 23 | 38 / 17 |
| | (I -) 40 / 22 | 40 / 25 |
| | (I -) 50 / 30 | 49 / 30 |
| | I - 52 / 34 | 54 / 33 |
| 35 mm | 52 / 34 | - |

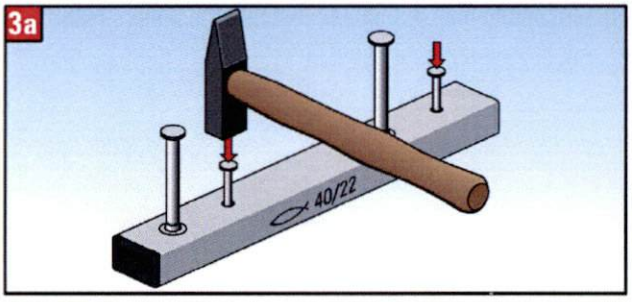


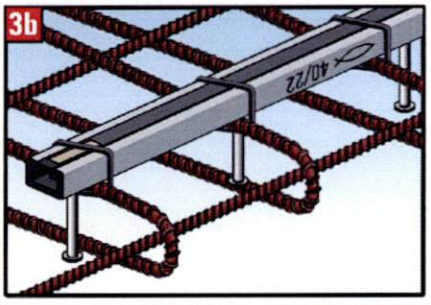


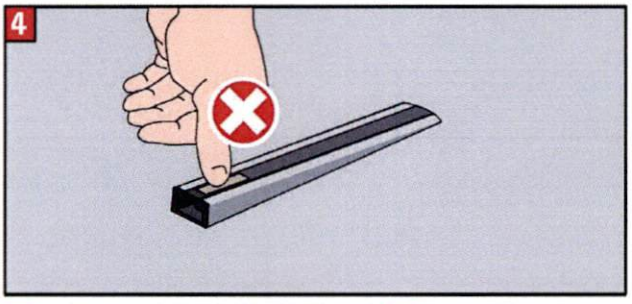


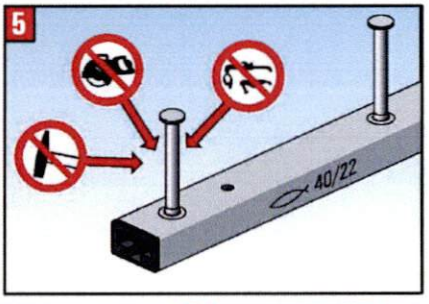


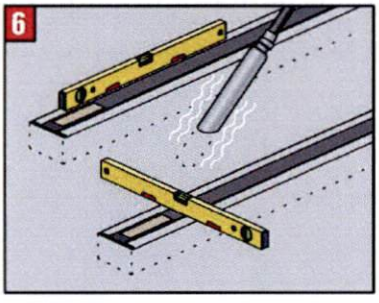


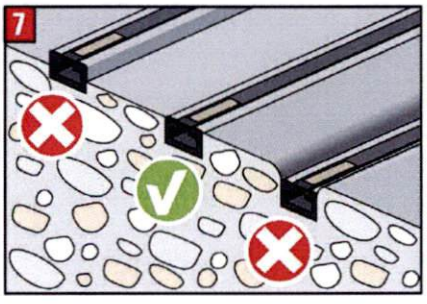


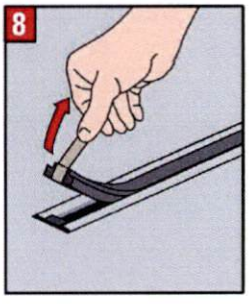


**fischer Anchor Channel FES with fischer Channel Bolts FBC**

**Intended Use**
Installation instruction for fischer Anchor Channels FES

Annex B5

fischer

# Channel Bolts FBC

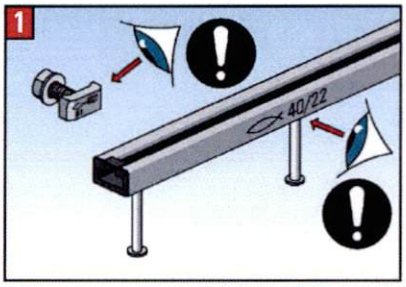


| FBC - | FES - H - ( I - ) | FES - C - |
|---|---|---|
| 2815 | - | 28 / 15 |
| 3817 | - | 38 / 17 |
| 4022 | 40 / 22 | 40 / 25 |
| 5030 | 50 / 30<br>52 / 34 | 49 / 30<br>54 / 33 |

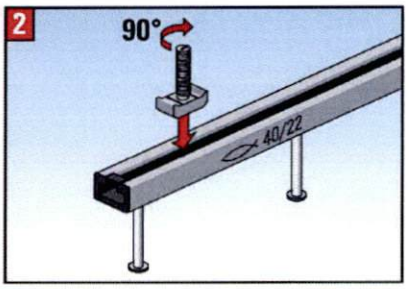


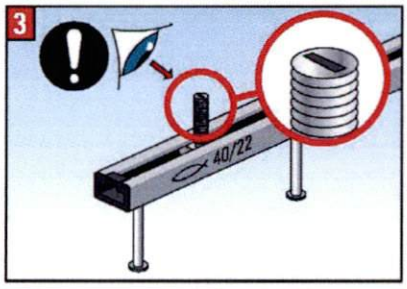


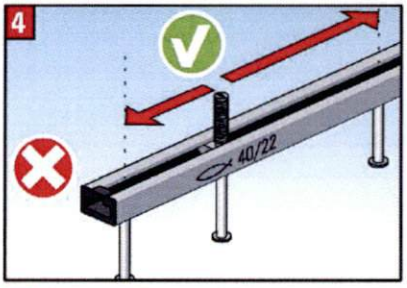


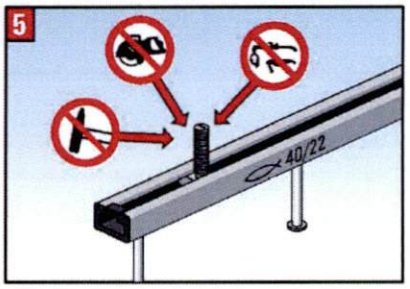


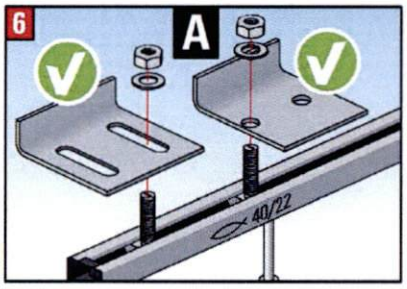


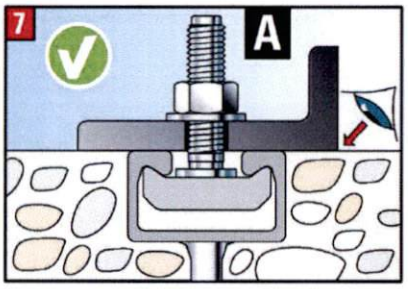


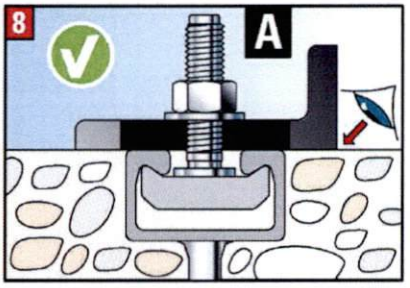


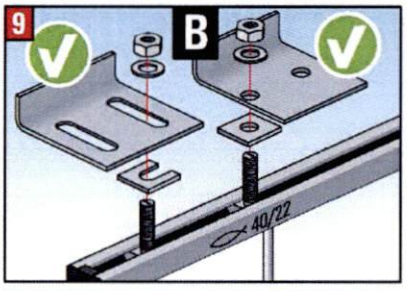


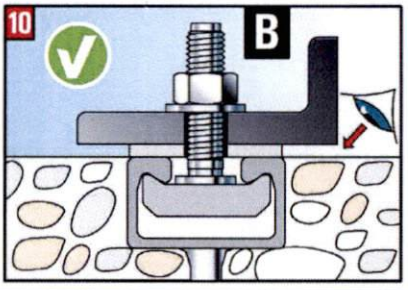


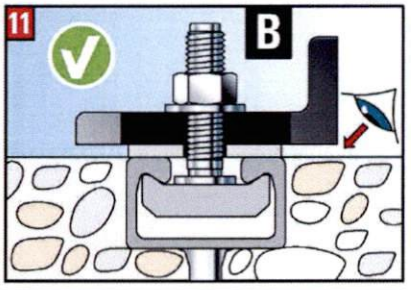


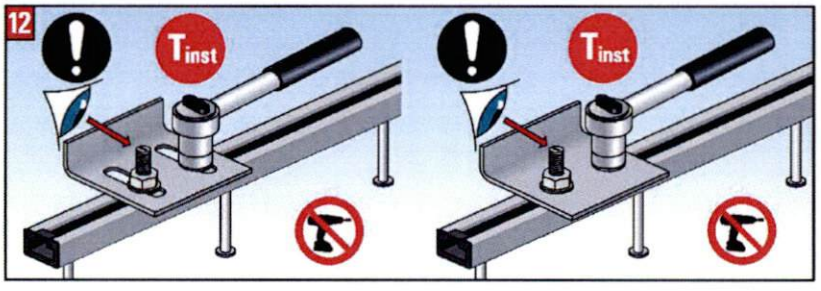


| FBC | $T_{inst}$ [Nm] | M8 | M10 | M12 | M16 | M20 |
|---|---|---|---|---|---|---|
| 2815 | A | 7 | 10 | 13 | - | - |
| | B | 15 | 30 | 45 | - | - |
| 3817 | A | - | 15 | 20 | - | - |
| | B | - | 30 | 45 | - | - |
| 4022 | A | - | 15 | 25 | 50 | - |
| | B | - | 30 | 45 | 100 | - |
| 5030 | A | - | 15 | 25 | 60 | 75 |
| | B | - | 30 | 45 | 100 | 230 |

$T_{inst}$ must not be exceeded.

**fischer Anchor Channel FES with fischer Channel Bolts FBC**

**Intended Use**
Installation instruction for fischer Channel Bolts FBC

Annex B6

# Serrated Channel Bolts FBC-S

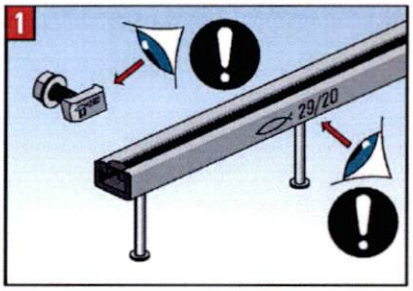


| FBC-S- | FES-H-S- | FES-C- |
|---|---|---|
| 2920 | 29/20 | - |
| 3823 | 38/23 | 38/17 |
| | | |
| | | |

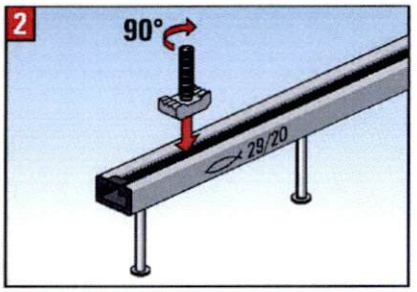


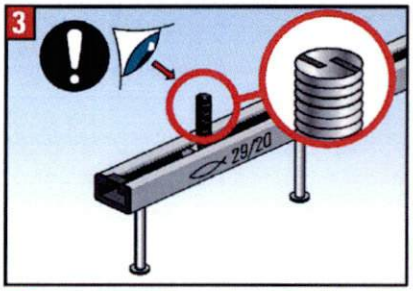


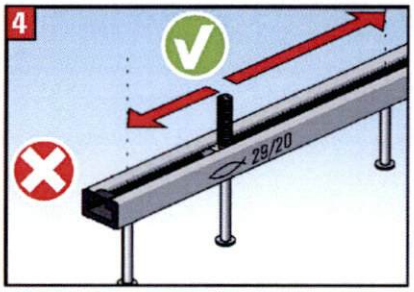

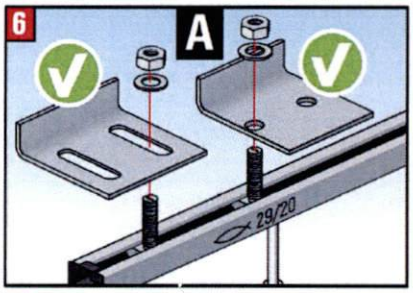


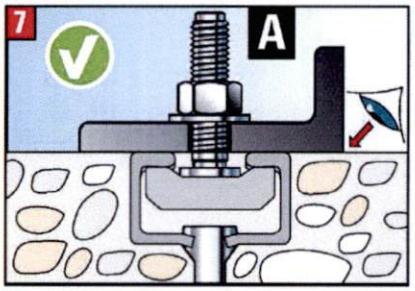


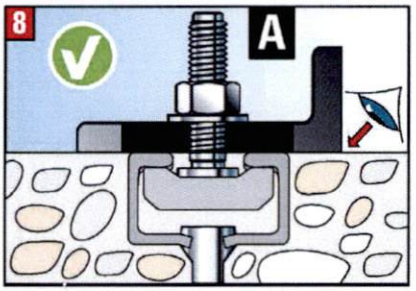


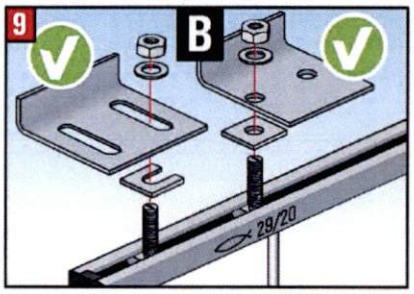


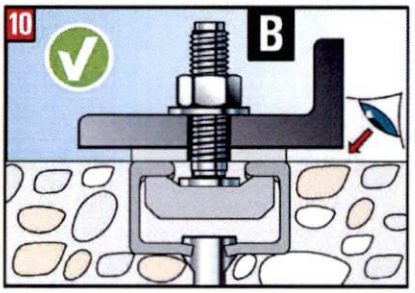


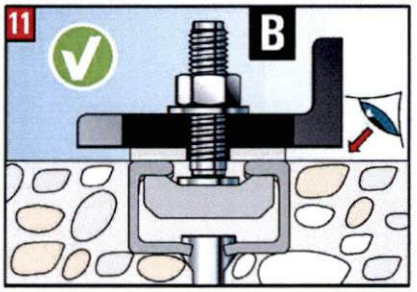


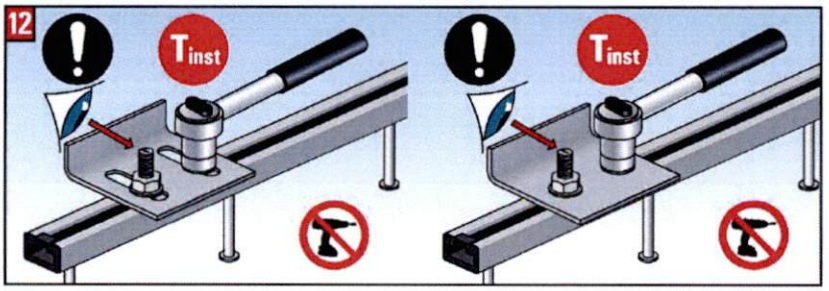


| FBC-S- | FES- | $T_{inst}$ [Nm] | M12 | M16 |
|---|---|---|---|---|
| 2920 | H-S-29/20 | A | 80 | - |
| | | B | 80 | - |
| 3823 | H-S-38/23 | A | 80 | 100 |
| | | B | 80 | 100 |
| | C-38/17 | A | 40 | 50 |
| | | B | 80 | 100 |

$T_{inst}$ must not be exceeded.

**fischer Anchor Channel FES with fischer Channel Bolts FBC**

**Intended Use**
Installation instruction for Serrated fischer Channel Bolts FBC-S

Annex B7

# Notching Channel Bolts FBC-N

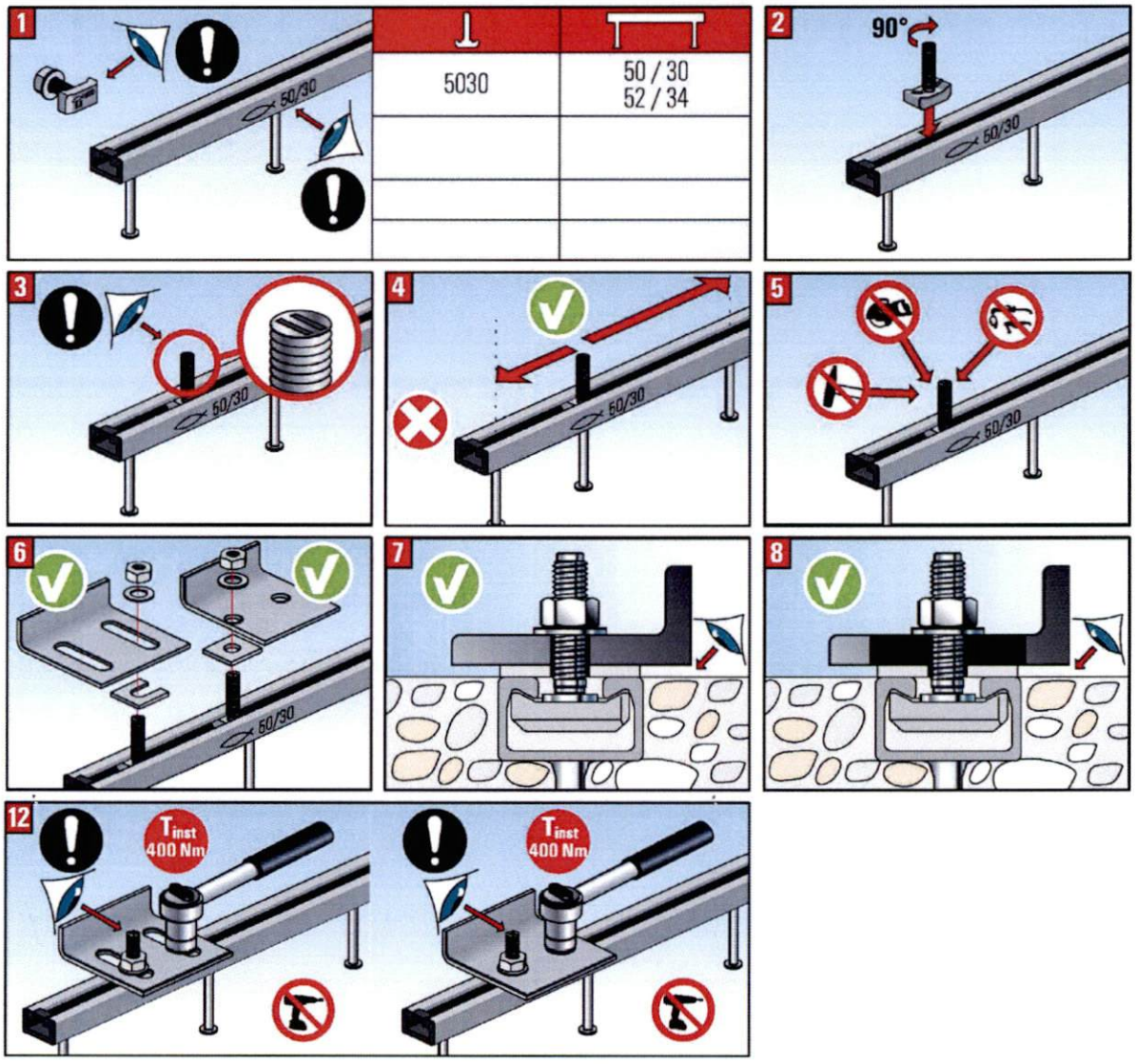


| ⊥ | T |
|---|---|
| 5030 | 50 / 30<br>52 / 34 |
| | |
| | |
| | |

$T_{inst}$ must not be exceeded.

**Table 10: Characteristic resistances under tension load – steel failure of anchor channel**

| Anchor Channel FES- | | | C-28/15 | C-38/17 | H-S-29/20 | H-S-38/23 | C-40/25<br>H-40/22<br>H-I-40/22 | C-49/30<br>H-50/30<br>H-I-50/30 | C-54/33<br>H-52/34<br>H-I-52/34 |
|---|---|---|---|---|---|---|---|---|---|
| **Steel failure: Failure of anchor** | | | | | | | | | |
| Characteristic resistance | $N_{Rk,s,a}$ | [kN] | 9 | 20 | 31 | 31 | 20<br>20<br>35 | 31<br>31<br>44 | 55<br>55<br>70,4 |
| Partial factor | $\gamma_{Ms}$ [1)] | [-] | 1,8 | | | | | | |
| **Steel failure: Failure of connection between anchor and channel** | | | | | | | | | |
| Characteristic resistance | $N_{Rk,s,c}$ | [kN] | 9 | 18 | 20,2 | 30,3 | 20<br>20<br>38 | 31<br>31<br>40 | 55<br>55<br>70,4 |
| Partial factor | $\gamma_{Ms}$ [1)] | [-] | 1,8 | | | | | | |
| **Steel failure: Local failure by flexure of channel lips** | | | | | | | | | |
| Characteristic spacing of channel bolts for $N_{Rk,s,l}$ | $s_{l,N}$ | [mm] | 56 | 76 | 60 | 76 | 80<br>80<br>80 | 100<br>100<br>100 | 108<br>105<br>105 |
| Characteristic resistance | $N^0_{Rk,s,l}$ | [kN] | 9 | 18 | 20,2 | 30,3 | 20<br>38<br>38 | 31<br>43<br>43 | 55<br>72<br>72 |
| Partial factor | $\gamma_{Ms}$ [1)] | [-] | 1,8 | | | | | | |

[1)] In absence of other national regulations

**Table 11: Characteristic flexural resistance of channel under tension load**

| Anchor Channel FES- | | | C-28/15 | C-38/17 | H-S-29/20 | H-S-38/23 | C-40/25<br>H-40/22<br>H-I-40/22 | C-49/30<br>H-50/30<br>H-I-50/30 | C-54/33<br>H-52/34<br>H-I-52/34 |
|---|---|---|---|---|---|---|---|---|---|
| **Stahlversagen: Biegung der Schiene** | | | | | | | | | |
| Characteristic flexural resistance of channel | $M_{Rk,s,flex}$ | [Nm] | 310 | 567 | 745 | 1.241 | 915<br>1.118<br>1.118 | 1.554<br>2.185<br>2.185 | 2.350<br>3.163<br>3.670 |
| Partial factor | $\gamma_{Ms,flex}$ [1)] | [-] | 1,15 | | | | | | |

[1)] In absence of other national regulations

**Table 12: Characteristic resistances under tension load – concrete failure**

| Anchor Channel FES- | | | C-28/15 | C-38/17 | H-S-29/20 | H-S-38/23 | C-40/25<br>H-40/22<br>H-I-40/22 | C-49/30<br>H-50/30<br>H-I-50/30 | C-54/33<br>H-52/34<br>H-I-52/34 |
|---|---|---|---|---|---|---|---|---|---|
| **Pullout failure** | | | | | | | | | |
| Characteristic resistance in cracked concrete C12/15 | $N_{Rk,p}$ | [kN] | 7,6 | 13,6 | 21,2 | 21,2 | 13,6<br>13,6<br>27,0 | 21,2<br>21,2<br>33,8 | 33,2<br>33,2<br>54,0 |
| Characteristic resistance in uncracked concrete C12/15 | $N_{Rk,p}$ | [kN] | 10,7 | 19,0 | 29,7 | 29,7 | 19,0<br>19,0<br>37,8 | 29,7<br>29,7<br>47,3 | 46,5<br>46,5<br>75,6 |
| Factor of $N_{Rk,p}$ | C16/20 | $\psi_c$ [-] | 1,33 | | | | | | |
| | C20/25 | | 1,67 | | | | | | |
| | C25/30 | | 2,08 | | | | | | |
| | C30/37 | | 2,50 | | | | | | |
| | C35/45 | | 2,92 | | | | | | |
| | C40/50 | | 3,33 | | | | | | |
| | C45/55 | | 3,75 | | | | | | |
| | C50/60 | | 4,17 | | | | | | |
| | C55/67 | | 4,58 | | | | | | |
| | ≤C60/75 | | 5,00 | | | | | | |
| Partial factor | $\gamma_{Mp}=\gamma_{Mc}$ [1)] | [-] | 1,5 | | | | | | |
| **Concrete cone failure**, | factor $k_1$ | | | | | | | | |
| Cracked concrete | $k_{cr,N}$ | [-] | 7,2 | 7,8 | 7,8 | 8,1 | 7,9<br>8,0<br>7,9 | 8,1<br>8,1<br>8,1 | 8,7<br>8,7<br>8,7 |
| Uncracked concrete | $k_{ucr,N}$ | [-] | $=1{,}427 * k_{cr,N}$ | | | | | | |
| Partial factor | $\gamma_{Mc}$ [1)] | [-] | 1,5 | | | | | | |
| **Splitting failure**, | | | | | | | | | |
| Characteristic edge distance | $c_{cr,sp}$ | [mm] | $= 3 * h_{ef}$ | | | | | | |
| Characteristic spacing | $s_{cr,sp}$ | [mm] | $= 2 * c_{cr,sp} = 6 * h_{ef}$ | | | | | | |
| Partial factor | $\gamma_{Msp}$ | [-] | 1,5 | | | | | | |

[1)] In absence of other national regulations

**Table 13: Displacements under tension load**

| Anchor Channel FES- | | | C-28/15 | C-38/17 | H-S-29/20 | H-S-38/23 | C-40/25<br>H-40/22<br>H-I-40/22 | C-49/30<br>H-50/30<br>H-I-50/30 | C-54/33<br>H-52/34<br>H-I-52/34 |
|---|---|---|---|---|---|---|---|---|---|
| Tension load | N | [kN] | 3,6 | 7,1 | 8,0 | 12,0 | 7,9<br>15,1<br>15,1 | 12,3<br>17,1<br>17,1 | 21,8<br>28,6<br>28,6 |
| Short term displacement [1)] | $\delta_{N0}$ | [mm] | 0,7 | 1,3 | 1,4 | 2,0 | 1,5<br>2,2<br>2,2 | 1,4<br>1,5<br>1,5 | 1,2<br>1,9<br>1,9 |
| Long term displacement [1)] | $\delta_{N\infty}$ | [mm] | 1,4 | 2,6 | 2,8 | 4,0 | 3,0<br>4,5<br>4,5 | 2,8<br>2,9<br>2,9 | 2,4<br>3,7<br>3,7 |

[1)] Displacements in midspan of the anchor channel, including slip of channel bolt, deformation of channel lips, bending of the channel and slip of the anchor channel in concrete

**Table 14: Characteristic resistances under shear load – steel failure of anchor channel**

| Anchor Channel FES- | | | C-28/15 | C-38/17 | H-S-29/20 | H-S-38/23 | C-40/25<br>H-40/22<br>H-I-40/22 | C-49/30<br>H-50/30<br>H-I-50/30 | C-54/33<br>H-52/34<br>H-I-52/34 |
|---|---|---|---|---|---|---|---|---|---|
| **Steel failure: Failure of anchor** | | | | | | | | | |
| Characteristic resistance | $V_{Rk,s,a,y}$ | [kN] | 9 | 18 | 20,2 | 30,3 | 20<br>40<br>40 | 31<br>60<br>60 | 55<br>100<br>100 |
| | $V_{Rk,s,a,x}$ | [kN] | -2) | -2) | 18,8 | 18,8 | -2)<br>-2)<br>-2) | -2)<br>18,8<br>26,4 | -2)<br>33,0<br>42,2 |
| Partial factor | $\gamma_{Ms}$ 1) | [-] | 1,8 | | | | | | |
| **Failure of connection between anchor and channel** | | | | | | | | | |
| Characteristic resistance | $V_{Rk,s,c,y}$ | [kN] | 9 | 18 | 20,2 | 30,3 | 20<br>40<br>40 | 31<br>60<br>60 | 55<br>100<br>100 |
| | $V_{Rk,s,c,x}$ | [kN] | -2) | -2) | 12,1 | 18,2 | -2)<br>-2)<br>-2) | -2)<br>18,6<br>24,0 | -2)<br>33,0<br>42,2 |
| Partial factor | $\gamma_{Ms}$ 1) | [-] | 1,8 | | | | | | |
| **Local failure by flexure of channel lips under shear load perpendicular to the longitudinal axis of the channel** | | | | | | | | | |
| Characteristic spacing of channel bolts for $V_{Rk,s,l}$ | $s_{l,V}$ | [mm] | 56 | 76 | 60 | 76 | 80<br>80<br>80 | 100<br>100<br>100 | 108<br>108<br>108 |
| Characteristic resistance | $V^0_{Rk,s,l,y}$ | [kN] | 9 | 18 | 20,2 | 30,3 | 20<br>40<br>40 | 31<br>60<br>60 | 55<br>100<br>100 |
| Partial factor | $\gamma_{Ms}$ 1) | [-] | 1,8 | | | | | | |

1) In absence of other national regulations
2) No performance assessed.

**Table 15: Characteristic resistance for shear load in direction of the longitudinal axis of the channel – steel failure**

| Anchor Channel FES- | | | | H-S-29/20 | H-S-38/23 | H-40/22<br>H-I-40/22 | H-50/30<br>H-I-40/22 | H-52/34<br>H-I-52/34 |
|---|---|---|---|---|---|---|---|---|
| **Steel failure: Connection between channel lips and channel bolt** | | | | | | | | |
| Characteristic resistance | $V_{Rk,s,l,x}$ | [kN] | FBC-S-29/20-M12-8.8 | 22,5 | -2) | -2) | -2) | -2) |
| | | | FBC-S-38/23-M12-8.8 | -2) | 23,2 | -2) | -2) | -2) |
| | | | FBC-S-38/23-M16-8.8 | -2) | 30,3 | -2) | -2) | -2) |
| | | | FBC-N-50/30-M20-8.8 | -2) | -2) | -2) | 18,7 | 18,7 |
| Installation factor | $\gamma_{inst}$ 1) | [-] | | 1,2 | 1 | -2) | 1,4 | 1,4 |

1) In absence of other national regulations
2) No performance assessed.

**Table 16: Characteristic resistances under shear load – concrete failure**

| Anchor Channel FES- | | | C-28/15 | C-38/17 | H-S-29/20 | H-S-38/23 | C-40/25<br>H-40/22<br>H-I-40/22 | C-49/30<br>H-50/30<br>H-I-50/30 | C-54/33<br>H-52/34<br>H-I-52/34 |
|---|---|---|---|---|---|---|---|---|---|
| **Pryout failure** | | | | | | | | | |
| Product factor | $k_8$ | [-] | 1 | 2 | 2 | 2 | 2 | 2 | 2 |
| Partial factor | $\gamma_{Mc}$ 1) | [-] | 1,5 | | | | | | |
| **Concrete edge failure** $k_{12}$ | | | | | | | | | |
| Cracked concrete | $k_{cr,V}$ | [-] | 5,8 | 6,9 | 5,6 | 5,6 | 7,5 | 7,5 | 7,5 |
| Uncracked concrete | $k_{ucr,V}$ | [-] | 8,1 | 9,7 | 7,8 | 7,8 | 10,5 | 10,5 | 10,5 |
| Partial factor | $\gamma_{Mc}$ 1) | [-] | 1,5 | | | | | | |

1) In absence of other national regulations

**Table 17: Displacements under shear load**

| Anchor Channel FES- | | | C-28/15 | C-38/17 | H-S-29/20 | H-S-38/23 | C-40/25<br>H-40/22<br>H-I-40/22 | C-49/30<br>H-50/30<br>H-I-50/30 | C-54/33<br>H-52/34<br>H-I-52/34 |
|---|---|---|---|---|---|---|---|---|---|
| Shear load perpendicular to the longitudinal axis of the channel | $V_y$ | [kN] | 3,6 | 7,1 | 8,0 | 12,0 | 7,9<br>15,9<br>15,9 | 12,3<br>23,8<br>23,8 | 21,8<br>39,7<br>39,7 |
| Short time displacement 1) | $\delta_{V,y,0}$ | [mm] | 0,7 | 1,3 | 1,4 | 2,0 | 1,5<br>2,1<br>2,1 | 1,4<br>3,7<br>3,7 | 1,2<br>4<br>4 |
| Long time displacement 1) | $\delta_{V,y,\infty}$ | [mm] | 1,1 | 2,0 | 2,1 | 3,0 | 2,3<br>3,2<br>3,2 | 2,1<br>5,5<br>5,5 | 1,8<br>5,9<br>5,9 |
| Shear load in direction of the longitudinal axis of the channel | $V_x$ | [kN] | -3) | -3) | 6,6 | 12,0 | -3)<br>-3)<br>-3) | 5,1<br>5,1<br>5,1 | 5,1<br>5,1<br>5,1 |
| Short time displacement 2) | $\delta_{V,x,0}$ | [mm] | -3) | -3) | 0,6 | 0,8 | -3)<br>-3)<br>-3) | 0,5<br>0,5<br>0,5 | 0,5<br>0,5<br>0,5 |
| Long time displacement 2) | $\delta_{V,x,\infty}$ | [mm] | -3) | -3) | 0,9 | 1,3 | -3)<br>-3)<br>-3) | 0,8<br>0,8<br>0,8 | 0,8<br>0,8<br>0,8 |

1) Displacements in midspan of the anchor channel, including slip of channel bolt, deformation of channel lips and slip of the anchor channel in concrete
2) Displacements of the anchor channel, including slip of channel bolt, deformation of channel lips and slip of the anchor channel in concrete
3) No performance assessed.

**Table 18: Characteristic resistances under combined tension and shear load**

| Anchor Channel FES- | | | C-28/15 | C-38/17 | H-S-29/20 | H-S-38/23 | C-40/25<br>H-40/22<br>H-I-40/22 | C-49/30<br>H-50/30<br>H-I-50/30 | C-54/33<br>H-52/34<br>H-I-52/34 |
|---|---|---|---|---|---|---|---|---|---|
| **Steel failure: Local failure by flexure of channel lips and failure by flexure of channel** | | | | | | | | | |
| Product factor | $k_{13}$ | [-] | according to EN 1992-4:2019, 7.4.3.1 | | | | | | |
| **Steel failure: Failure of anchor and connection between anchor and channel** | | | | | | | | | |
| Product factor | $k_{14}$ | [-] | according to EN 1992-4:2019, 7.4.3.1 | | | | | | |

**Table 19: Characteristic resistances under tension and shear load – steel failure of channel bolts**

| Channel bolt | | | M8 | M10 | M12 | M16 | M20 |
|---|---|---|---|---|---|---|---|
| **Steel failure, Characteristic tension resistance** | | | | | | | |
| FBC-28/15 | $N_{Rk,s}$ | [kN] | 29,2 | 33,0 | 45,1 | -[2] | -[2] |
| FBC-38/17 | | | -[2] | 46,4 | 67,4 | -[2] | -[2] |
| FBC-S-29/20 | | | -[2] | -[2] | 48,5 | -[2] | -[2] |
| FBC-S-38/23 | | | -[2] | -[2] | 67,4 | 71,5 | -[2] |
| FBC-40/22 | | | -[2] | 46,4 | 55,1 | 82,2 | -[2] |
| FBC-50/30 | | | -[2] | 46,4 | 67,4 | 96,5 | 127,2 |
| FBC-N-50/30 | | | -[2] | -[2] | -[2] | -[2] | 142,5 |
| Partial factor | $\gamma_{Ms}$ [1] | [-] | 1,5 | | | | |
| | | | | | | | |
| **Characteristic shear resistance** | $V_{Rk,s,x} = V_{Rk,s,y}$ | [kN] | 14,6 | 23,2 | 33,7 | 62,8 | 98,0 |
| Partial factor | $\gamma_{Ms}$ [1] | [-] | 1,25 | | | | |

[1] In absence of other national regulations
[2] Combination not available

**Table 20: Characteristic resistances under shear load with lever arm – steel failure of channel bolts**

| Channel bolt [2] | | | | M8 | M10 | M12 | M16 | M20 |
|---|---|---|---|---|---|---|---|---|
| **Steel failure** | | | | | | | | |
| Characteristic bending resistance | $M^0_{Rk,s}$ [3] | [Nm] | FBC-(S-) (N-) | 30,0 | 59,8 | 104,8 | 266,4 | 519,3 |
| Partial factor | $\gamma_{Ms}$ [1] | [-] | | 1,25 | | | | |
| Internal lever arm | a | [mm] | FBC-28/15 | 16,7 | 18,1 | 19,4 | -[3] | -[3] |
| | | | FBC-38/17 | -[3] | 22,7 | 24,0 | -[3] | -[3] |
| | | | FBC-S-29/20 | -[3] | -[3] | 20,0 | -[3] | -[3] |
| | | | FBC-S-38/23 | -[3] | -[3] | 23,7 | 25,7 | -[3] |
| | | | FBC-40/22 | -[3] | 23,5 | 24,8 | 26,8 | -[3] |
| | | | FBC-50/30 | -[3] | 27,7 | 29,0 | 31,0 | 33,3 |
| | | | FBC-N-50/30 | -[3] | -[3] | -[3] | -[3] | 34,0 |

[1] In absence of other national regulations

[2] Materials according to Annex A7, Table 6

[3] Combination not available

[4] The characteristic flexure resistance according to Table 19 is limited as follows:

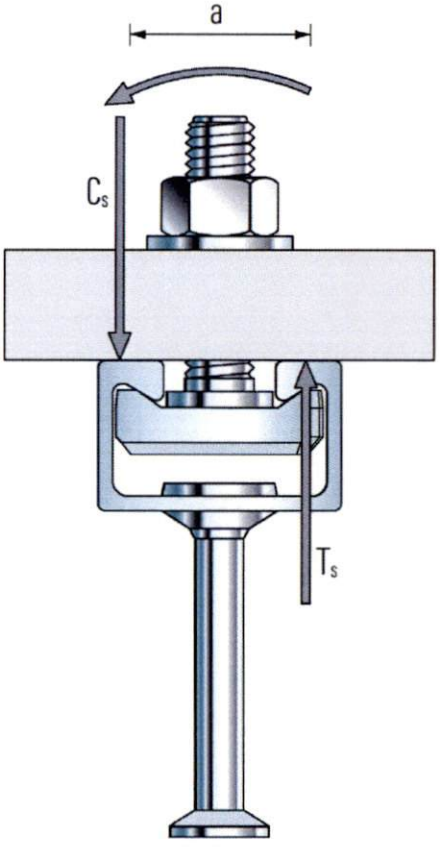


$M^0_{Rk,s} \leq 0{,}5 \cdot N^0_{Rk,s,l} \cdot a$ ($N^0_{Rk,s,l}$ according to Annex C1, Table 10)

$M^0_{Rk,s} \leq 0{,}5 \cdot N_{Rk,s} \cdot a$ ($N_{Rk,s}$ according to Annex C5, Table 18)

a = Internal lever arm according to Table 19

$T_s$ = Tension force acting on the channel lips

$C_s$ = Compression force acting on the channel lips