DEKLARACJA WŁAŚCIWOŚCI UŻYTKOWYCH

DoP W0010

dla wkrętów fischer PowerFull II

PL

1. Niepowtarzalny kod identyfikacyjny typu wyrobu: **DoP W0010**

2. Zamierzone zastosowanie: **Wkręty samogwintujące do stosowania w konstrukcjach drewnianych, zobacz załącznik, w szczególności aneksy 1, 2.**

3. Producent: **fischerwerke GmbH & Co. KG, Klaus-Fischer-Str. 1, 72178 Waldachtal, Niemcy**

4. Upoważniony przedstawiciel: **–**

5. System(-y) oceny i weryfikacji stałości właściwości użytkowych: **3**

6. Europejski dokument oceny: **EAD 130118-01-0603**
   Europejska ocena techniczna: **ETA-21/0751; 2022-08-26**
   Jednostka ds. oceny technicznej: **ETA-Danmark A/S**
   Jednostka lub jednostki notyfikowane: **0769 Karlsruher Institut für Technologie (KIT)**

7. Deklarowane właściwości użytkowe:

Wytrzymałość mechaniczna i stabilność osadzenia (BWR 1), Bezpieczeństwo i dostępność w użyciu (BWR 4)

Wymiary:	Aneksy 5-9
Charakterystyczny moment plastyczności:	Aneks 19
Kąt gięcia:	Aneks 19
Charakterystyczny parametr ekstrakcji:	Aneksy 26-29
Charakterystyczny parametr przeciągania łba:	Aneks 31
Charakterystyczna wytrzymałość na rozciąganie:	Aneksy 2, 19
Charakterystyczna granica plastyczności:	Aneks 19
Charakterystyczna wytrzymałość na skręcanie:	Aneksy 2, 19
Moment wkręcania:	Aneks 19
Rozstaw, odległości między końcami i krawędziami wkrętów oraz minimalna grubość materiału drewnopochodnego:	Aneksy 14-18
Moduł poślizgu dla śrub obciążonych głównie osiowo:	Aneksy 35-36
Trwałość antykorozyjna:	Aneksy 1,3

Ochrona przeciwpożarowa (BWR 2)

Reakcja na ogień:	Klasy (A1)

8. Odpowiednia dokumentacja techniczna lub specjalna dokumentacja techniczna: **–**

Właściwości użytkowe określonego powyżej wyrobu są zgodne z zestawem deklarowanych właściwości użytkowych. Niniejsza deklaracja właściwości użytkowych wydana zostaje zgodnie z rozporządzeniem (UE) nr 305/2011 na wyłączną odpowiedzialność producenta określonego powyżej.

W imieniu producenta podpisał(-a):

Dr.-Ing. Oliver Geibig, Dyrektor Zarządzający ds. Jednostek Biznesowych i Inżynierii

Jürgen Grün, Dyrektor Zarządzający ds. Chemii i Jakości

Tumlingen, 2022-09-15

Niniejsza Deklaracja Właściwości Użytkowych została przygotowana w różnych językach. W razie wątpliwości w interpretacji, wersja angielska jest zawsze miarodajna.

Załącznik zawiera dobrowolne i uzupełniające informacje w języku angielskim (neutralne językowo), a wykraczające poza wymagania prawne.

Translation guidance Essential Characteristics and Performance Parameters for Annexes

0

Mechanical resistance and stability (BWR 1), Safety and accessibility in use (BWR 4) **Wytrzymałość mechaniczna i stabilność osadzenia (BWR 1), Bezpieczeństwo i dostępność w użyciu (BWR 4)**		
1	Dimensions: **Wymiary:**	
2	Characteristic yield moment: **Charakterystyczny moment plastyczności:**	$M_{y,k}$
3	Bending angle: **Kąt gięcia:**	α
4	Characteristic withdrawal parameter: **Charakterystyczny parametr ekstrakcji:**	$f_{ax,k}$
5	Characteristic head pull-through parameter: **Charakterystyczny parametr przeciągania łba:**	$f_{head,k}$
6	Characteristic tensile strength: **Charakterystyczna wytrzymałość na rozciąganie:**	$f_{tens,k}$
7	Characteristic yield strength: **Charakterystyczna granica plastyczności:**	$f_{y,k}$
8	Characteristic torsional strength: **Charakterystyczna wytrzymałość na skręcanie:**	$f_{tor,k}$
9	Insertion Moment: **Moment wkręcania:**	$f_{tor,k}/R_{tor,mean}$
10	Spacing, end and edge distances of the screws and minimum thickness of the wood based material: **Rozstaw, odległości między końcami i krawędziami wkrętów oraz minimalna grubość materiału drewnopochodnego:**	a_1, $a_{3,t}$; $a_{3,c}$; a_2; $a_{4,t}$; $a_{4,c}$
11	Slip modulus for mainly axially loaded screws: **Moduł poślizgu dla śrub obciążonych głównie osiowo:**	K_{ser}
12	Durability against corrosion: **Trwałość antykorozyjna:**	
Safety in case of fire (BWR 2) **Ochrona przeciwpożarowa (BWR 2)**		
13	Reaction to fire: **Reakcja na ogień:**	Class

II SPECIFIC PART OF THE EUROPEAN TECHNICAL ASSESSMENT

1 Technical description of product

»fischer PowerFull II« screws are self-tapping screws to be used in timber structures. They shall be threaded over the full length or over a part of the length. The screws are produced from a carbon steel wire with outer thread diameters *d* (nominal diameter) between 6,0 mm and 14,0 mm. Where corrosion protection is required, the material or coating shall be declared in accordance with the relevant specification given in Annex A of EN 14592. They are zinc-plated (e.g., yellow-zinced or blue-zinced), bonus-zinc-coated, burnished, nickel-plated or brass-plated. The mean thickness of the zinc-plated screws is min. 5 µm.

Product and product description are given in the Annex A.

The characteristic material values, dimensions and tolerances of the »fischer PowerFull II« screws not indicated in Annexes shall correspond to the respective values laid down in the Technical Documentation of this European Technical Assessment (ETA).

Specifications of the product itself are given in Annex C1. The screws are intended to be used with a minimum embedment depth (penetration length) given in Annex C2. It is possible to consider the influences of the tip of the screws on the load-carrying capacities. The intended use and exemplary applications are also detailed in the Annex D to Annex N.

2 Specification of the intended use in accordance with the applicable European Assessment Document (hereinafter EAD)

The performances given in Section 3 are only valid if the »fischer PowerFull II« screws are used in compliance with the specifications and conditions given in Annex C.

The intended use of the screws is in timber connections for which all requirements of mechanical resistance, stability and safety in use in the sense of the Basic Works Requirements 1 and 4 of Regulation 305/2011 (EU) shall be fulfilled.

The provisions made in this European Technical Assessment are based on an assumed intended working life of the screws of 50.

The indications given on the working life cannot be interpreted as a guarantee given by the producer or Assessment Body but are to be regarded only as a means for choosing the right products in relation to the expected economically reasonable working life of the products.

3 Performance of the product and references to the methods used for its assessment

Characteristic	Assessment of characteristic
3.1 Mechanical resistance and stability (BWR 1)	
Dimensions	See annex A1
Characteristic yield moment	See annex C1
Bending angle	See annex C1
Characteristic withdrawal parameter	See annex D7
Characteristic head pull-through parameter of screws	See annex D15
Characteristic tensile strength	Characteristic value $f_{tens,k}$: PowerFull II: d= 6,0 mm 12,8 kN d= 8,0 mm 26,4 kN d=10,0 mm 37,8 kN d=12,0 mm 36,0 kN d=14,0 mm 55,0 kN
Characteristic yield strength	See annex C1
Characteristic torsional strength	Characteristic value $f_{tor,k}$: PowerFull II: d= 6,0 mm 10 Nm d= 8,0 mm 28 Nm d=10,0 mm 39 Nm d=12,0 mm 58 Nm d=14,0 mm 102 Nm
Insertion moment	*Note: Ratio of the characteristic torsional strength to the mean insertion moment:* $f_{tor,k} / R_{tor,mean} \geq 1,5$ (Annex C1)
Spacing, end and edge distances of the crews and minimum thickness of the timber material	See annex B5 to B9
Slip modulus for mainly axially loaded screws and threaded rods	See annex D17
Durability against corrosion	No performance assessed
3.2 Safety in case of fire (BWR2)	
Reaction to fire	The screws are considered to satisfy **Euroclass A1** in accordance with EN 13501-1 and Delegated Regulation 2016/364, according to EC Decision 96/603/EC.
3.4 Safety and accessibility in use (BWR4)	
Same as BWR 1	See aspects covered by BWR 1

The intended use and exemplary applications are also detailed in the Annex D to Annex N
See additional information in section 3.8 and 3.9

3.8 Methods of verification

The assessment of the performance of »fischer PowerFull II« screws in relation to the applicable BWR's has been made in accordance with the European Assessment Document (EAD) No. EAD 130118-01-0603 Screws and threaded rods for use in timber constructions.

Durability and servicability

The screws have been assessed as having satisfactory durability and serviceability when used in timber structures using the timber species described in EN 1995-1-1 and subjected to the conditions defined by service classes 1 and 2.

3.9 General aspects related to the fitness for use of the product.

The European Technical Assessment is issued for the screws based on agreed data/information, deposited with ETA-Danmark, which identifies the product that has been assessed. Changes to the product or production process, which could result in this deposited data/information being incorrect, should be notified to ETA-Danmark before the changes are introduced. ETA-Danmark will decide if such changes affect the ETA and consequently the validity of the CE marking based on the ETA and if so whether further assessment or alterations to the ETA, shall be necessary.

The screws are manufactured in accordance with the provisions of the European Technical Assessment using the automated manufacturing process as identified during the inspection of the plant by the assessment body issuing the ETA and the notified body and laid down in the technical documentation. The installation shall be carried out in accordance with EN 1995-1-1 (Eurocode 5), or an appropriate national code unless, otherwise defined in this document.

4 Assessment and verification of constancy of performance (hereinafter AVCP) system applied, with reference to its legal base.

4.1 AVCP system

According to the decision 97/176/EC of the European Commission, as amended, the system(s) of assessment and verification of constancy of performance (see Annex V to Regulation (EU) No 305/2011) is 3.

PowerFull II – Self-tapping screw - Countersunk head with full thread

Table A1.1: Screw Dimensions and Materials

Drawing

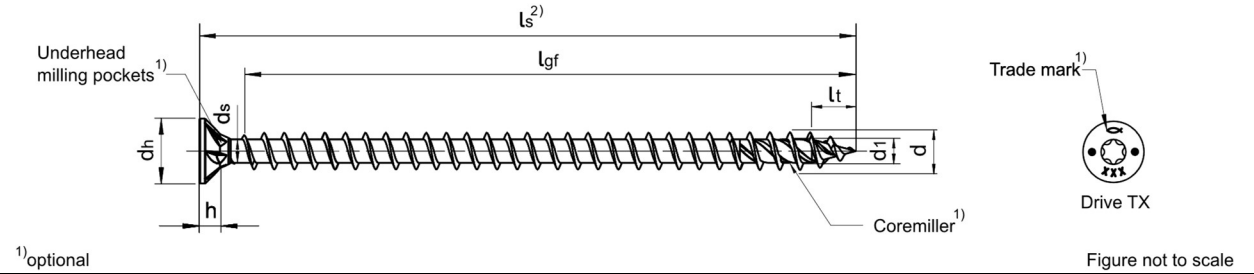

Materials and coatings

- Carbon Steel
- Yellow zinc-plated, blue zinc-plated, blue zinc-plated ≥ 12 µm, bonus-zinc-coated

Nominal diameter		**6,0**	**8,0**
d	Outer thread diameter	6,00	8,00
	Allowed deviation	± 0,30	± 0,40
d_1	Inner thread diameter	3,95	5,20
	Allowed deviation	± 0,30	± 0,40
d_h	Head diameter	11,50	14,40
	Allowed deviation	± 0,60	± 0,70
d_s	Shank diameter	4,25	5,85
	Allowed deviation	± 0,30	± 0,30
h	Head height	3,60	4,60
l_t	Length of the screw tip	7,30	9,80
	Drive TX	30	40

Nominal length		**Standard thread length**	
		Allowed Deviations	
l_s	$l_{s,min/max}$	$l_{gf,\ min}$	$l_{gf,\ min}$
80	l_s ± 2,30	l_s –12,00	l_s –19,00
90	l_s ± 2,70		
100	l_s ± 2,70		
110	l_s ± 2,70		
120	l_s ± 2,70		
150	l_s ± 3,20		
in steps of 10 mm			
260	l_s ± 4,10	l_s –12,00	l_s –19,00
270	l_s ± 4,10		
in steps of 10 mm			
300	l_s ± 4,10	l_s –12,00	l_s –19,00
in steps of 10 mm			
400	l_s ± 4,50		l_s –19,00
in steps of 10 mm			
500	l_s ± 4,90		l_s –19,00

All sizes in [mm]

2) Other screw lengths with l_s min ≤ l_s ≤ l_s max and other thread lengths l_{gf} ≥ 4xd up to max. standard thread lengths are allowed

fischer PowerFull II	**Annex A1**
Dimensions and Materials – Countersunk head with full thread	

PowerFull II – Self-tapping screw - Cylinder head with full thread

Table A2.1: Screw Dimensions and Materials

Drawing

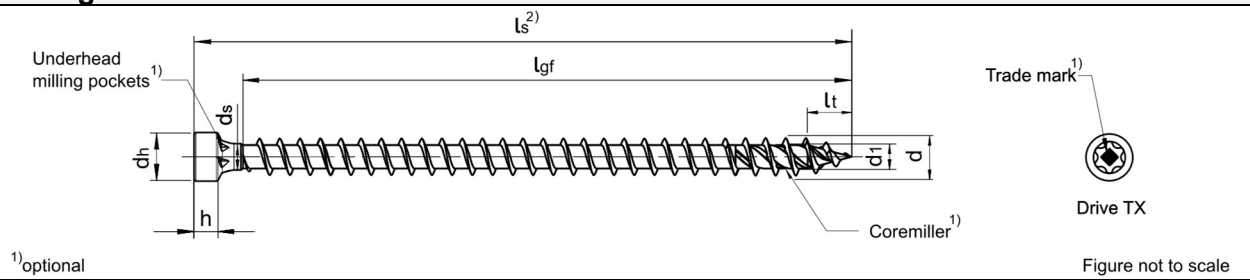

Materials and coatings

- Carbon Steel
- Yellow zinc-plated, blue zinc-plated, blue zinc-plated ≥ 12 µm, bonus-zinc-coated

Nominal diameter		**6,0**	**8,0**
d	Outer thread diameter	6,00	8,00
	Allowed deviation	± 0,30	± 0,40
d_1	Inner thread diameter	3,95	5,20
	Allowed deviation	± 0,30	± 0,40
d_h	Head diameter	8,60	10,70
	Allowed deviation	± 0,60	± 0,60
d_s	Shank diameter	4,25	5,85
	Allowed deviation	± 0,30	± 0,30
h	Head height	4,50	5,50
l_t	Length of the screw tip	7,30	9,80
	Drive TX	30	40

Nominal length		**Standard thread length**	
l_s	Allowed Deviations		
	$l_{s,min/max}$	$l_{gf,\ min}$	$l_{gf,\ min}$
80	l_s ± 2,30	l_s –12,00	l_s –19,00
90	l_s ± 2,70		
100	l_s ± 2,70		
110	l_s ± 2,70		
120	l_s ± 2,70		
150	l_s ± 3,20		
in steps of 10 mm			
260	l_s ± 4,10	l_s –12,00	l_s –19,00
270	l_s ± 4,10		
in steps of 10 mm			
300	l_s ± 4,10	l_s –12,00	l_s –19,00
in steps of 10 mm			
400	l_s ± 4,50		l_s –19,00
in steps of 10 mm			
500	l_s ± 4,90		l_s –19,00

All sizes in [mm]

2) Other screw lengths with l_s min ≤ l_s ≤ l_s max and other thread lengths l_{gf} ≥ 4xd up to max. standard thread lengths are allowed

PowerFull II – Self-tapping screw - Countersunk head with full thread and drilling tip

Table A3.1: Screw Dimensions and Materials

Drawing

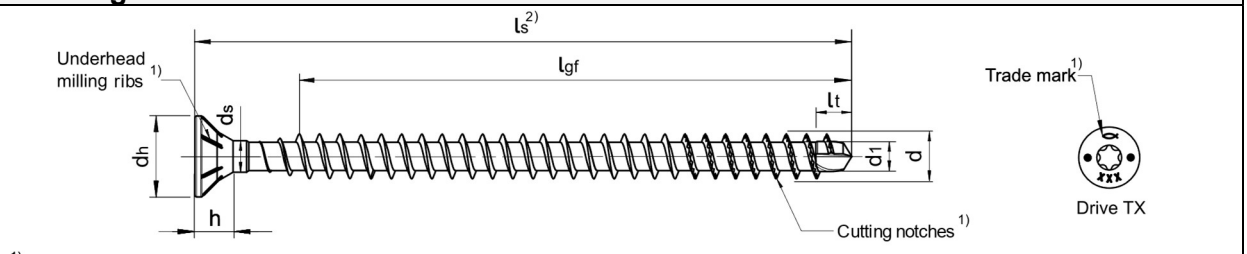

1) optional

Figure not to scale

Materials and coatings

- Carbon Steel
- Yellow zinc-plated, blue zinc-plated, blue zinc-plated ≥ 12 µm, bonus-zinc-coated

Nominal diameter		**10,0**		**12,0**	**14,0**
d	Outer thread diameter	10,00		12,00	14,00
	Allowed deviation	± 0,50		± 0,60	± 0,60
d₁	Inner thread diameter	6,20		7,00	8,50
	Allowed deviation	± 0,30		± 0,35	± 0,40
dₕ	Head diameter	18,00		21,00	22,00
	Allowed deviation	± 0,50		± 0,50	± 0,50
dₛ	Shank diameter	7,00		8,00	10,00
	Allowed deviation	± 0,30		± 0,30	± 0,30
h	Head height	8,00		9,25	8,90
lₜ	Length of the screw tip	8,00		10,00	12,00
	Drive TX	40	50	50	50

Nominal length		**Standard thread length**		
l_s	Allowed Deviations			
	$l_{s,min/max}$	$l_{gf,\ min}$	$l_{gf,\ min}$	$l_{gf,\ min}$
in steps of 10 mm				
100 - 120	l_s ± 2,70	l_s –20,00	l_s –20,50	l_s –22,00
120 - 180	l_s ± 3,20			
180 - 250	l_s ± 3,60			
250 - 315	l_s ± 4,10			
315 - 400	l_s ± 4,50			
400 - 500	l_s ± 4,90			
500 - 600	l_s ± 5,50			
600 - 630	l_s ± 5,50			
630 - 800	l_s ± 6,30			
800 - 1000	l_s ± 7,00			
1000 - 1250	l_s ± 8,30			
1250 - 1500	l_s ± 9,30			

All sizes in [mm]

2) Other screw lengths with l_s min ≤ l_s ≤ l_s max and other thread lengths l_{gf} ≥ 4xd up to max. standard thread lengths are allowed

PowerFull II - – Self-tapping screw - Cylinder head with full thread and drilling tip

Table A4.1: Screw Dimensions and Materials

Drawing

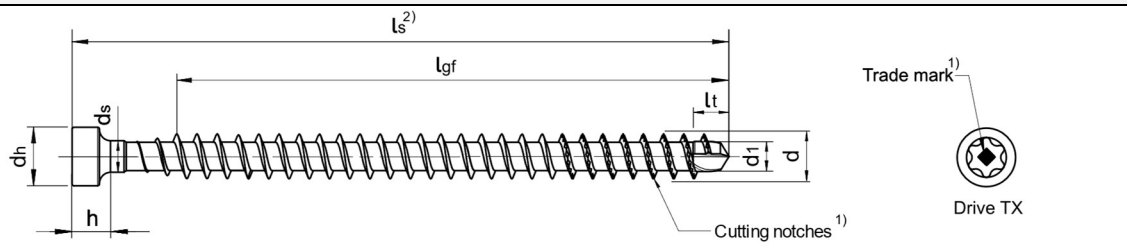

1) optional

Figure not to scale

Materials and coatings

- Carbon Steel
- Yellow zinc-plated, blue zinc-plated, blue zinc-plated ≥ 12 µm, bonus-zinc-coated

Nominal diameter		**10,0**		**12,0**	**14,0**
d	Outer thread diameter	10,00		12,00	14,00
	Allowed deviation	± 0,50		± 0,60	± 0,60
d_1	Inner thread diameter	6,20		7,00	8,50
	Allowed deviation	± 0,30		± 0,35	± 0,40
d_h	Head diameter	12,50		14,50	14,50
	Allowed deviation	± 0,50		± 0,50	± 0,50
d_s	Shank diameter	7,00		8,00	10,00
	Allowed deviation	± 0,30		± 0,30	± 0,30
h	Head height	7,00		8,00	10,00
l_t	Length of the screw tip	8,00		10,00	12,00
	Drive TX	40	50	50	50

Nominal length		**Standard thread length**		
l_s	Allowed Deviations			
	$l_{s,min/max}$	$l_{gf,\ min}$	$l_{gf,\ min}$	$l_{gf,\ min}$
in steps of 10 mm				
100 - 120	l_s ± 2,70	l_s –20,00	l_s –20,50	l_s –22,00
120 - 180	l_s ± 3,20			
180 - 250	l_s ± 3,60			
250 - 315	l_s ± 4,10			
315 - 400	l_s ± 4,50			
400 - 500	l_s ± 4,90			
500 - 600	l_s ± 5,50			
600 - 630	l_s ± 5,50			
630 - 800	l_s ± 6,30			
800 - 1000	l_s ± 7,00			
1000 - 1250	l_s ± 8,30			
1250 - 1500	l_s ± 9,30			

All sizes in [mm]

2) Other screw lengths with l_s min ≤ l_s ≤ l_s max and other thread lengths l_{gf} ≥ 4xd up to max. standard thread lengths are allowed

Table A5.1: Washer Dimensions and Materials

Drawing

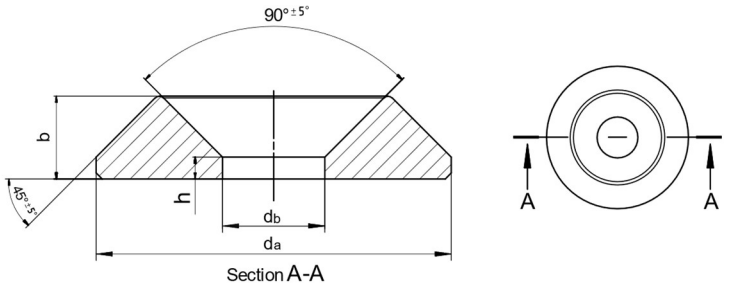

[1]optional

Section A-A

Figure not to scale

Materials and coatings

- Carbon Steel
- Yellow zinc-plated, blue zinc-plated, blue zinc-plated ≥12µm, bonus-zinc-coated, burnished, nickel plated, brass plated
- Stainless steel

Nominal diameter		6,0	8,0	10,0	12,0
d_a	Outer diameter	21,00	25,50	30,50	37,40
	Allowed deviation	± 2,0	± 2,0	± 2,0	± 0,4
d_b	Inner diameter	6,70	8,70	11,20	14,00
	Allowed deviation	-0,4	-0,4	-0,4	± 0,4
b	Washer height	4,70	5,20	6,20	8,50
	Allowed deviation	-0,4	-0,4	-0,4	± 0,3
h	Washer edge height	1,50	1,80	2,00	2,50
	Allowed deviation	± 0,15	± 0,15	± 0,15	± 0,3

All sizes in [mm]

Specifications of the intended use (informative)

Base Materials:
The screws are used for connections in load bearing timber structures between members of softwood and hardwood shown in the Table B1.1 and in combination with steel plates.
»fischer PowerFull II« screws can also be used as tensile or compressive reinforcement perpendicular to the grain (Annexes F, G, H, I, J, K) or as shear reinforcement (Annex E). Furthermore »fischer PowerFull II« screws may also be used for fixing of thermal insulation on rafters and on vertical facades (Annex L).

Steel plates and wood-based panels shall only be fixed on the side of the screw head - except SWP, VB if a screw with countersunk head is used.

The minimum thickness of wood-based panels should be at least 1,2·*d*.

Table B1.1: Materials for the intended use

Groups and Subgroups		Product	Abbreviation	hEN or EAD
Solid wood based (SWB)	Structural timber (ST)	Strength graded structural softwood timber	ST-c	EN 14081-1, EN 1912
		Strength graded structural hardwood timber	ST-d	EN 14081-1, EN 1912
		Structural finger jointed timber	FST	EN 15497
		Glued structural timber	GST	EN 14080
	Parallel laminated timber (PL)	Glued laminated timber made of softwoods	GLT-c	EN 14080
		Block glued glulam	BGLT	EN 14080
		Glued laminated timber made of hardwoods	GLT-d	EAD
		Single layered solid wood panel	SWP-P	EN 13353
	Cross laminated timber (CL)	Cross laminated timber	CLT	EAD 130005-01-0304
		Multi-layered solid wood panel	SWP-C	EN 13353

Table B2.1: Materials for the intended use (continuous of Table B1.1)

Groups and Subgroups			Product	Abbreviation	hEN or ETA
Veneer-based (VB)	Laminated Veneer Lumber (LVL)	LVL-P	Softwood LVL with parallel veneers	LVL-P-c	EN 14374
			Hardwood LVL with parallel veneers	LVL-P-d	ETA
			Hardwood Glued LVL with parallel veneers	GLVL-P-c	
			Hardwood Glued LVL with parallel veneers	GLVL-P-d	ETA
		LVL-C	Softwood LVL with crossband veneers	LVL-C-c	EN 14374
			Hardwood LVL with crossband veneers	LVL-C-d	
			Softwood Glued LVL with crossband veneers	GLVL-C-c	
			Softwood Glued LVL with crossband veneers	GLVL-C-d	ETA
	PLY		Softwood Plywood	PLY-c	EN 13986 and EN 636
			Hardwood Plywood	PLY-d	EN 13986 and EN 636
Strand based (SB)			Oriented strand board	OSB	EN 13986 and EN 300
Wood -fibre- based (WFB)			Fibreboard, hard	HB	EN 622-2
			Fibreboard, medium	MB	EN 622-3
Wood- particle- based (WPB)			Resinoid-bonded particle board	RPB	EN 13986 and EN 312
Gypsum -based (GYB)			Gypsum plasterboards	GPB	EN 520
			Gypsum fibreboards	GFB	EN 15283-2

Specifications of the intended use

Design:
The design of the connections shall be based on the characteristic load-carrying capacities of the screws given in Annex C and Annex D.
The design capacities shall be derived from the characteristic capacities in accordance with the EN 1995-1-1 or an appropriate National Code. The screws are intended for the use of connections subjected to static or quasi-static loadings.
The zinc-coated screws are for the use in timber structures subjected to moisture defined by the service classes 1 and 2 according to EN 1995-1-1.

- Instructions from *fischerwerke GmbH & Co. KG* should be considered for installation.
- A minimum of two screws should be used for connections in load bearing timber structures.
- The overall length l_s of the screws, shall not be less than 80 mm and shall not be greater than 1500 mm. Dimensions see Annex A.
- The ratio of inner thread diameter to outer thread diameter d_1/d ranges from 0,53 to 0,75.
- The thread pitch p (distance between two adjacent thread flanks) ranges from $0{,}41 \cdot d$ to $0{,}53 \cdot d$.
- Earthquake design: No breaking is observed at a bending angle of $\alpha \leq (45/d^{0,7} + 20)°$.

Installation: The screws shall be driven into softwood and hardwood with a maximum characteristic density of 730 kg/m³ without pre-drilling or after pre-drilling (see Table B2.1 and Table B3.1) with a diameter not larger than the inner thread diameter for the length of the threaded part.

Table B3.1: Recommended pre-drilling diameter for soft- and hardwood

Outer thread diameter *d* [mm]	Bore-hole diameter [mm]
6,0	4,0
8,0	5,0
10,0	6,0
12,0	7,0
14,0	8,0

Specifications of the intended use

Installation:
Recommended values without pre-drilling for the maximum penetration length of the threaded part of »fischer PowerFull II« made of carbon steel in wood-based members like ash, beech and oak or LVL according to ETA-14/0354 (e.g. Baubuche) are shown in Table B3.1 below. There is no limitation in softwood or wood-based members made of softwood.

Table B4.1: Recommended penetration length without pre-drilling in hardwood

Outer thread diameter *d* [mm]	Maximum penetration length [mm]
6,0	80
8,0	60
10,0	Pre-drilled application is recommended
12,0	
14,0	

When using screws with a countersunk the upper surface of the screw head must be flush with the surface of the timber part. Especially for timber parts with gross densities higher than 550 kg/m³ it is recommended to use adequate counter-sinker to avoid breaking of the screw heads. For non-predrilled applications countersinking deeper is not permitted and should be avoided, because of damaging the surface and reduce the durability of the construction, except screws with cylindrical head geometries which are also allowed to sink. Countersunk head screws made of carbon steel according to Annex A1 and A3 can be used together with washers according to Annex A5. Washers according to EN ISO 7094 can be used together with washers according to Annex A5.

»fischer PowerFull II« screws can be driven in with standard screw drillers and with torque impact screw drivers too (e.g. fischer FSS 18V 400 BL or fischer FSS 18V 600). In combination with steel plates, torque controlled tools e.g. torque wrenches have to be used. For the use of screws in wood-based panels, like particle- and fibreboards, the screws have to be tightened carefully to ensure the characteristic load bearing capacity.

If on the head side metal plates are mounted, it has to be ensured that the diameter of the borehole of the steel plate has to be ≤ d + 1 [mm]. Effects of the borehole tolerances must be considered in the structural design (load-independent slippage).

In addition, care must be taken about the accuracy of fit between the screw head and the metal to avoid stress peaks, and thus also requires a maximum allowed deviation of the screw-in-direction of ± 5° (e. g. screw-in direction ε = 90° to the surface means 85° ≤ α ≤ 95°).

Specifications of the intended use

Minimum timber cross section, end- and edge distances

For structural timber members, minimum spacings and distances for screws $d \leq 8$ mm in predrilled holes are given as for nails in predrilled holes in EN 1995-1-1 clause 8.3.1.2 and table 8.2 and for screws $d > 8$ mm in clause 8.5. Here, the outer thread diameter d must be considered. The requirements of the minimum thickness of the timber elements must be considered, see EN 1995 clause 8.3.1.2.

Spacing a_2 may be reduced from $5 \cdot d$ to $2{,}5 \cdot d$, if the condition $a_1 \cdot a_2 \geq 25 \cdot d^2$ is fulfilled. For Douglas-fir members minimum spacings and distances parallel to the grain shall be increased by at least 50 %.

Minimum distances from the unloaded edge perpendicular to the grain may be reduced to $3 \cdot d$ also for timber thickness $t < 5 \cdot d$, if the spacing parallel to the grain and the end distance is at least $25 \cdot d$.

Table B5.1: Shapes of screw heads and applications with steel plates

Head shapes	Description
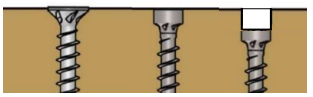	Screws with countersunk and cylindrical head according to Annex A1 to A4
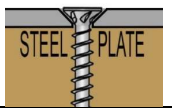	Screws to fix steel plates on the head side according to Annex A1 and A3

Figures not to scale

Table B5.2: Minimum distances and spacings
Notations for Structural Timber (ST-c) and Glued Laminated Timber (GLT-c) made in softwoods

Notations		
a_1	Spacing a_1 parallel to the grain of Solid Timber	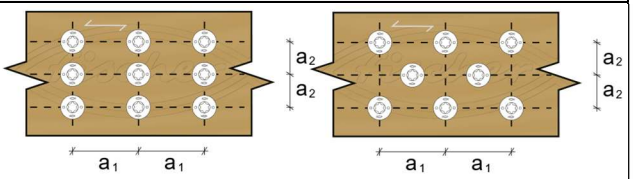
a_2	Spacing a_2 perpendicular to the grain of Solid Timber	
$a_{3,c}$	Distance $a_{3,c}$ from the centre of the screw-part in timber to the unloaded end grain of Solid Timber, $90° \leq \alpha \leq 270°$	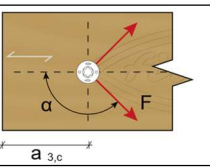
$a_{3,t}$	Distance $a_{3,t}$ from the centre of the screw-part in timber to the loaded edge of Solid Timber $-90° \leq \alpha \leq 90°$	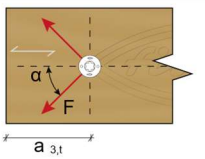
$a_{4,c}$	Distance $a_{4,c}$ from the centre of the screw-part in timber to the unloaded edge of Solid Timber $180° \leq \alpha \leq 360°$	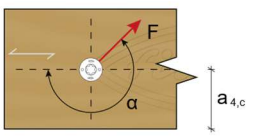
$a_{4,t}$	Distance $a_{4,t}$ from the centre of the screw-part in timber to the loaded end grain of Solid Timber $0° < \alpha < 180°$	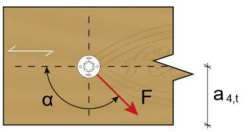

Figures not to scale

fischer PowerFull II	**Annex B5 (informative)**
Specifications of the indented use – Minimum timber cross sections, end- and edge distances – Notations for ST and GLT	

Specifications of the intended use

Minimum timber cross section, end- and edge distances
Solid Timber (ST-c, FST, and GST) and Glued Laminated Timber (GLT-c, BGLT)

Laterally loaded Screws
Minimum distances and spacings for laterally loaded »fischer PowerFull II« screws in non-predrilled holes in members of Solid Timber (ST-c, FST, GST), Glued Laminated Timber (GLT-c, BGLT) or similar glued products with a minimum thickness $t = 12 \cdot d$ and a minimum width of of $8 \cdot d$ or 60 mm, whichever is greater, are recommended to choose with the help of Table B6.1.

Table B6.1: Laterally loaded screws: Minimum end- and edge distances for Solid Timber and Glued Laminated Timber products with a maximum gross density of 480 kg/m³ for non-predrilled applications

Head shapes and applications (see Table B5.1)	Solid Timber and Timber (ST-c, FST, GST, GLT-c, BGLT)					
	Minimum spacings and distances					
	a_1	a_2	$a_{3,c}$	$a_{3,t}$	$a_{4,c}$	$a_{4,t}$
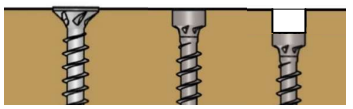	$5 \cdot (1+\lvert\cos\alpha\rvert) \cdot d$	$5 \cdot d$	$7 \cdot d$	$(7+5 \cdot \cos\alpha) \cdot d$	$5 \cdot d$	$(5+2 \cdot \sin\alpha) \cdot d$
	$3{,}5 \cdot (1+\lvert\cos\alpha\rvert) \cdot d$	$3{,}5 \cdot d$	$7 \cdot d$	$(5+5 \cdot \cos\alpha) \cdot d$	$5 \cdot d$	$(5+2 \cdot \sin\alpha) \cdot d$

Figures not to scale

Axially loaded screws without drilling tips (according to Annex A1, A2)
Minimum distances and spacings for exclusively axially loaded »fischer PowerFull II« screws with other types than drilling tips (see Annex A1 and A2), in non-predrilled holes in members of Solid Timber (ST-c, FST and GST), Glued Laminated Timber (GLT-c) or similar glued products with a minimum thickness $t = 10 \cdot d$ and a minimum width of $8 \cdot d$ or 60 mm, whichever is the greater, may be taken as given in Table B6.2.

Table B6.2: Axially loaded screws: Minimum end- and edge distances for Solid Timber and Glued Laminated Timber products, all other tip types without drilling tip with a maximum gross density of 480 kg/m³ for non-predrilled applications.

Head shapes and applications (see Table B5.1)	Solid Timber and Glued Laminated Timber (ST-c, FST, GST, GLT-c, BGLT)			
	Minimum spacings and distances			
	a_1	a_2	$a_{1,CG}$	$a_{4,c}$
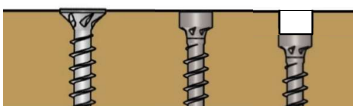	$5 \cdot d$	$5 \cdot d$	$10 \cdot d$	$4 \cdot d$

Figures not to scale

fischer PowerFull II	**Annex B6 (informative)**
Specifications of the indented use – Minimum distances and spacings laterally loaded screws	

Specifications of the intended use

Minimum timber cross section, end- and edge distances
Solid Timber (ST-c, FST, and GST) and Glued Laminated Timber (GLT-c, BGLT)

Axially loaded screws with drilling tips (Annex A3, A4)
Minimum distances and spacing for exclusively axially loaded »fischer PowerFull II« screws with a self-tapping drilling tip (see Annex A3, A4) in non-predrilled holes in members with a minimum thickness $t = 10 \cdot d$ and a minimum width of $8 \cdot d$ or 60 mm, whichever is the greater, may be taken as given in Table B7.1.

Table B7.1: Axially loaded screws: Minimum end- and edge distances for Solid Timber and Glued Laminated Timber products for screws with drilling tips with a maximum gross density of 480 kg/m³ for non-predrilled applications are shown in Annex A3, A4.

Head shapes and applications (see Table B5.1)	Solid Timber and Glued Laminated Timber (ST-c, FST, GST, GLT-c, BGLT)			
	Minimum spacings and distances			
	a_1	a_2	$a_{3,c}$	$a_{4,c}$
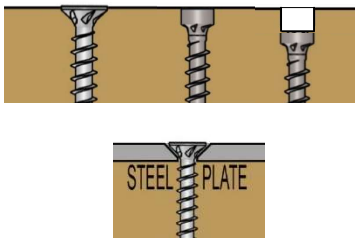	$5 \cdot d$	$5 \cdot d$	$5 \cdot d$	$3 \cdot d$

Figures not to scale

Note: For a crossed screw couple, the minimum spacing between the crossing screws should be at least $1{,}5 \cdot d$.

Specifications of the intended use

Minimum timber cross section, end- and edge distances
Cross Laminated Timber (CLT)

Table B8.1: Minimum distances and spacings, notations for Cross Laminated Timber

Notations for applications in the plane surface (see Figure D6.1)		
a_1	Spacing a_1 parallel to the plane direction of the CLT-panel	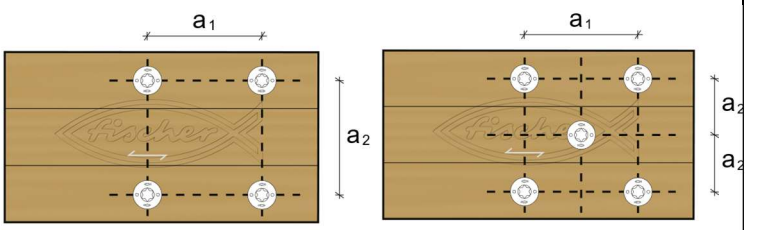
a_2	Spacing a_2 perpendicular to plane direction of the CLT-panel	
$a_{3,c}$	Distance $a_{3,c}$ from centre of the screw-part in timber to the unloaded edge in plane direction of the CLT-panel	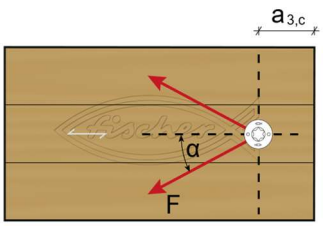
$a_{3,t}$	Distance $a_{3,t}$ from centre of the screw-part in timber to the loaded edge in plane direction of the CLT-panel	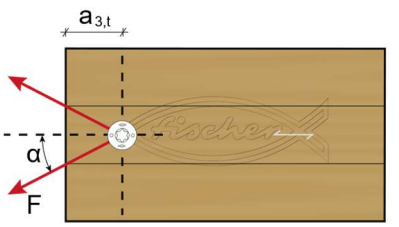
$a_{4,c}$	Distance $a_{4,c}$ from centre of the screw-part in timber to the unloaded edge perpendicular to the plane direction of the CLT-panel	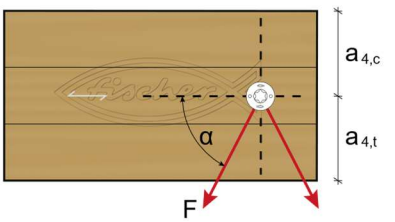
$a_{4,t}$	Distance $a_{4,t}$ from centre of the screw-part in timber to the loaded edge perpendicular to the plane direction of the CLT-panel	
Notations for applications in the edge surface (see Figure D6.1)		
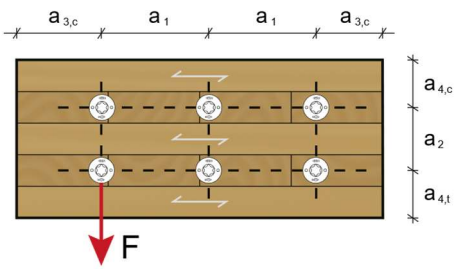	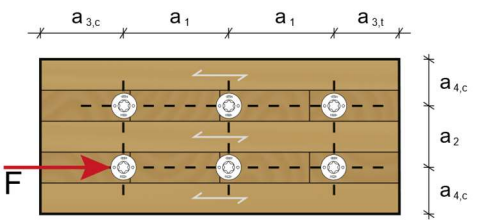	

Figures not to scale

Specifications of the intended use

Minimum distances and spacings
Material: Cross Laminated Timber (CLT)

Laterally and axially loaded screws:

Unless specified otherwise in the technical specification (ETA or hEN) of Cross Laminated Timber, minimum distances and spacings for screws in the plane surface of Cross Laminated Timber members with a minimum thickness $t = 10 \cdot d$ may be taken as shown in Table B9.1 and Table B9.2.

Table B9.1: Minimum end- and edge distances for Cross Laminated Timber in the plane surface

Cross Laminated Timber, Screws in the plane surface						
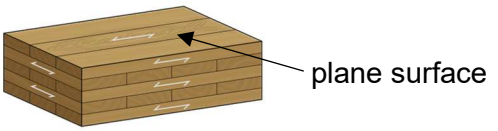						
Head shapes and applications (see Table B5.1)	Minimum spacings and distances					
	a_1	a_2	$a_{3,c}$	$a_{3,t}$	$a_{4,c}$	$a_{4,t}$
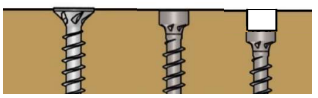	$4 \cdot d$	$2{,}5 \cdot d$	$6 \cdot d$	$6 \cdot d$	$2{,}5 \cdot d$	$6 \cdot d$
	$3 \cdot d$	$2{,}0 \cdot d$	$6 \cdot d$	$5 \cdot d$	$2{,}5 \cdot d$	$6 \cdot d$

Figures not to scale

Unless specified otherwise in the technical specification (ETA or hEN) of Cross Laminated Timber, minimum distances and spacing for screws in the edge surface of Cross Laminated Timber members with a minimum thickness $t = 10 \cdot d$ and a minimum penetration depth perpendicular to the edge surface of $10 \cdot d$ may be considered.

Table B9.2: Minimum end- and edge distances for Cross Laminated Timber in the edge surface

Cross Laminated Timber, Screws in the edge surface						
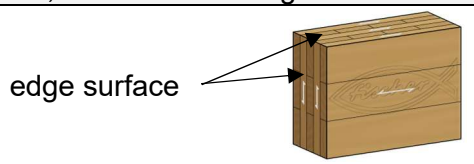						
Head shapes and applications (see Table B5.1)	Minimum spacings and distances					
	a_1	a_2	$a_{3,c}$	$a_{3,t}$	$a_{4,c}$	$a_{4,t}$
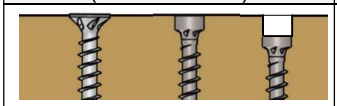	$10 \cdot d$	$3 \cdot d$	$7 \cdot d$	$12 \cdot d$	$5 \cdot d$	$5 \cdot d$
	$7 \cdot d$	$3 \cdot d$	$7 \cdot d$	$12 \cdot d$	$5 \cdot d$	$5 \cdot d$

Figures not to scale

Performance of the product and references to the methods used for its assessment

Performance of the PowerFull II screws itself (single product)

Table C1.1: Characteristic values of the load-carrying capacities of the screws

Outer thread diameter	**d**	**[mm]**	**6,0**	**8,0**	**10,0**	**12,0**	**14,0**
Characteristic strength parameters							
Tensile strength [1)]	$f_{tens,k}$	[kN]	12,80	26,40	37,80	36,00	55,00
Torsional strength [1)]	$f_{tor,k}$	[Nm]	10	28	39	58	102
Yield moment [1)]	$M_{y,Rk}$	[Nmm]	12450	30200	48000	42000	68000
Yield strength [1)]	$f_{y,k}$	[N/mm²]	1050			900	
Characteristic Stiffness Parameters							
Modulus of Elasticity	E_s	[N/mm²]	210.000				
Assessed Performances							
Bending angle [1)]		[°]	No breaking has been observed at a bending angle of $\alpha \leq 45°/d^{0,7}+20°$				
Safety factor insertion moment [1)]		[-]	Ratio of the characteristic torsional strength to the mean insertion moment: $f_{tor,k} / R_{tor,mean} \geq 1,5$ *Note: Reference density of the timber 480 kg/m³*				
[1)] Assessments of the product are done in accordance to the EAD 130118-01-0603							

Note: The tear-off capacity of the screw head is greater than the tensile capacity of the screw

Design of PowerFull II screws for the structural use in timber constructions

1 Mechanical Resistance and Stability

The load-carrying capacities for the »fischer PowerFull II« screws are applicable to the wood-based materials mentioned in Annex B1, B2, even though the term *»timber«* has been used in the following. European Technical Assessments for structural members or wood-based panels must be considered if applicable.

The characteristic lateral load-carrying capacities and the characteristic axial withdrawal capacities of »fischer PowerFull II« screws should be used for designs in accordance with EN 1995-1-1 (EN 1995-1-1) or an appropriate valid national code.

ETA's for structural members or wood-based panels must be considered where applicable.

For screws arranged under an angle between screw axis and grain-direction $\varepsilon \leq 15°$ (see Figure D2.1), the threaded penetration length (inclusive the tip of the screw) has to fulfill equation (1).

$$l_{ef} = \min \begin{cases} \dfrac{4 \cdot d}{\sin \varepsilon} \\ 20 \cdot d \end{cases} \tag{1}$$

For screws arranged under an angle between screw and grain-direction $15° < \varepsilon \leq 90°$ the minimum threaded penetration length must be $l_{ef} \geq 4 \cdot d$. For the fixing of rafters or similar building parts, the point side penetration length must be at least 40 mm (i.e. $l_{ef} \geq 40$ mm).

Reductions in the cross-sectional area caused by »fischer PowerFull II« screws shall be considered in accordance to the EN 1995-1-1, section 5.2.

1.1 Lateral load-carrying capacity $F_{v,Rk}$

The characteristic lateral load-carrying capacity of »fischer PowerFull II« screws shall be calculated according to EN 1995-1-1. The contribution of the rope effect may be considered, if only lateral loads (no axial loads) are acting on the screws. For the calculation of the load-carrying capacity, the following parameters should be taken into account. Figure D2.1 shows the definition of the necessary angles which consider the angle between load and grain-direction α, the angle between the surface of the structural element and the screw axis β and the angle between the screw axis and the grain-direction ε.

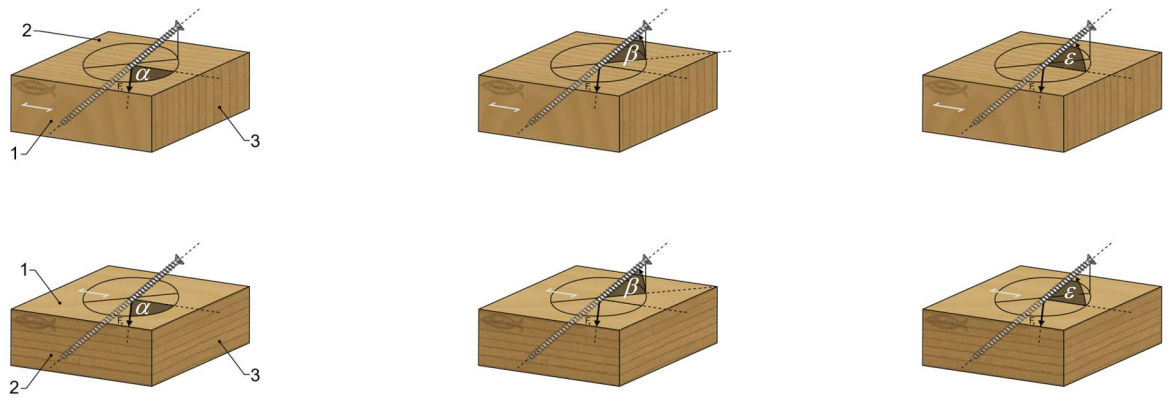

(1)	Wide face	α	Angle between grain-direction and acting load [°]
(2)	Edge face	β	Angle between screw axis and surface [°]
(3)	End grain	ε	Angle between screw axis and grain-direction [°]

Figure D2.1: Notations for angles in SWB, LVL, SB and WFB (figures not to scale)

1.1.1 Embedment strength $f_{h,\varepsilon,k}$ for the use in Structural Timber (ST-c, FST and GST, BGLT) and Parallel Laminated Timber (GLT-c)

The embedment strength for »fischer PowerFull II« screws in predrilled holes arranged at an angle between screw axis and grain-direction, 0° ≤ ε ≤ 90° can be calculated with the help of equation (2) and non-predrilled applications with the help of equation

$$f_{h,\varepsilon,k} = \frac{0{,}019 \cdot \rho_k^{1{,}24} \cdot d^{-0{,}3}}{2{,}5 \cdot \cos^2 \varepsilon + \sin^2 \varepsilon} \tag{2}$$

$$f_{h,\varepsilon,k} = \frac{0{,}082 \cdot \rho_k \cdot (1 - 0{,}01 \cdot d)}{2{,}5 \cdot \cos^2 \varepsilon + \sin^2 \varepsilon} \tag{3}$$

Note: Screws parallel to the end-grain-direction stressed perpendicular to the screw axis are only allowed for short-time loads.

In comparison to the ETA-12/0073, ETA-19/0175 and EN 1995-1-1 equation (2) to assess the embedment strength was modified in a way that instead of the angle α the angle ε should be used (see Figure D2.1). It is also possible to use the given equations and the mentioned documents.

1.1.2 Embedment strength $f_{h,k}$ for the use in Cross Laminated Timber (CLT)

If there are no other technical specification (ETA) for Cross Laminated Timber (CLT), the embedment strength for screws can be calculated as stated below. The following specifications are only applicable for screws with a diameter *d* of at least 6 mm, possible influences of gaps between the single lamellas have to be considered.

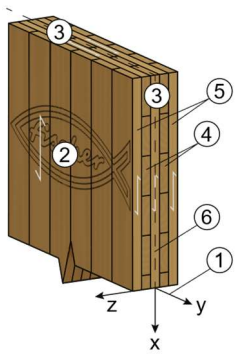

(1) Element plane
(2) Plane surface
(3) Edge surface (Narrow side)
(4) Inner layer (Inner lamellas)
(5) Outer layer (Outer lamellas)
(6) Middle layer (Middle lamella)

Figure D3.1: Notations CLT-elements (figure not to scale)

Screws in the plane surface

The embedment strength for screws in the plane surface of CLT-elements should be assumed as for Solid Timber according to equation (2), based on the characteristic density of the outer layer.

Screws in the edge (narrow) side

The embedment strength for screws in the narrow side of CLT-elements should be assumed according to equation (4).

$$f_{h,k} = 20 \cdot d^{-0,5} \tag{4}$$

1.1.3 Embedment strength $f_{h,\beta,\varepsilon,k}$ for the use in Laminated Veneer Lumber in softwood (LVL-c)

The embedment strength for »fischer PowerFull II« screws arranged at an angle between screw axis and grain-direction ε and an angle between screw axis of wide surface of the LVL β for $d \leq 12$ mm can be calculated with equation (5) for non-predrilled holes

$$f_{h,\beta,\varepsilon,k} = \frac{0,082 \cdot \rho_k \cdot d^{-0,3}}{(\sin^2 \beta + k_2 \cdot \cos^2 \beta) \cdot (\sin^2 \varepsilon + 2,5 \cdot \cos^2 \varepsilon)} \tag{5}$$

and for predrilled holes

$$f_{h,\beta,\varepsilon,k} = \frac{0,082 \cdot \rho_k \cdot (1 - 0,01 \cdot d)}{(\sin^2 \beta + k_2 \cdot \cos^2 \beta) \cdot (\sin^2 \varepsilon + 2,5 \cdot \cos^2 \varepsilon)} \tag{6}$$

with

$$k_2 = \begin{cases} 1 & \text{for LVL-P} \\ \min \begin{cases} d/(d-2) \\ 3 \end{cases} & \text{for LVL-C} \end{cases} \tag{7}$$

The embedment strength for »fischer PowerFull II« for d > 12 mm can be calculated with equation (8) for predrilled holes

$$f_{h,\alpha,\beta,\varepsilon,k} = \frac{0{,}082 \cdot \rho_k \cdot (1 - 0{,}01 \cdot d)}{(k_{90} \cdot \sin^2\alpha + \cos^2\alpha) \cdot (\sin^2\beta + k_3 \cdot \cos^2\beta) \cdot (\sin^2\varepsilon + 2{,}5 \cdot \cos^2\varepsilon)} \tag{8}$$

with

$$k_{90} = 1{,}15 + 0{,}015 \cdot d$$

$$k_3 = \max\begin{cases} d/(d-2) \\ 1{,}15 \end{cases} \tag{9}$$

Note: For α > 45° the angle α should be assumed to be 45°.

1.1.4 Embedment strength $f_{h,\alpha,\beta,k}$ for use in Laminated Veneer Lumber in hardwood LVL-d according to (ETA-14/0354)

The embedment strength for »fischer PowerFull II« screws arranged at an angle between load and grain-direction, 0° ≤ α ≤ 90° can be calculated with the help of equation (10). Screws with d > 8 mm should be predrilled.

$$f_{h,\alpha,\beta,k} = \frac{f_{h,k}}{(k_{90} \cdot \sin^2\alpha + \cos^2\alpha) \cdot (\sin^2\beta + k_1 \cdot \cos^2\beta)} \tag{10}$$

with

$$k_{90} = 0{,}5 + 0{,}024 \cdot d$$

$$k_1 = \begin{cases} 1{,}2 & \text{for LVL-P in hardwood} \\ \min\begin{cases} d/(d-2) \\ 3 \end{cases} & \text{for LVL-C in hardwood} \end{cases} \tag{11}$$

Where

d	Outer diameter of the screw [mm]
$f_{h,\alpha,k}$	Characteristic embedment strength for screws d > 12 mm in LVL-c [N/mm²]
$f_{h,\beta,\varepsilon,k}$	Characteristic embedment strength for screws d ≤ 12 mm in LVL-c [N/mm²]
$f_{h,\varepsilon,k}$	Characteristic embedment strength for screws d ≤ 12 mm in ST-c, FST, GLT, BGLT [N/mm²]
$f_{h,k}$	Characteristic value of the embedment strength according to Table D5.1 [N/mm²]
k_{90}	Factor to consider influences of the diameter [-]
k_1, k_2, k_3	Factors to consider influences of the diameter and material [-]
α	Angle between grain-direction and acting load [°]
β	Angle between screw axis and surface [°]
ε	Angle between screw axis and grain-direction [°]
ρ_k	Characteristic gross density of the wood-based element [kg/m³]

1.1.5 Embedment strength $f_{h,k}$ for the use in Oriented Strand Boards (OSB), Plywood (PLY), Fibreboards (HB, MB, SB), Particleboards (RPB)

The embedment strength for »fischer PowerFull II« screws in non-predrilled holes if no other regulations are given, arranged at an angle β = 90° to the plane surface can be calculated with the help of Table D5.1.

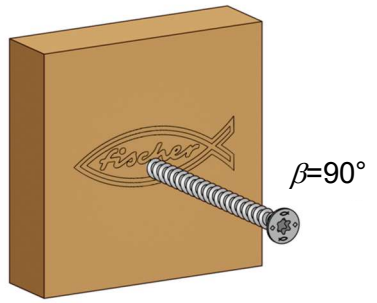

Figure D5.1: Screw arrangement in the plane surface of WBP (figure not to scale)

Table D5.1: Characteristic values of the embedment strength in the plane surface of OSB, HB, MB, SB and RPB

Outer thread diameter [mm]	**d**	**6,0**	**8,0**	**10,0**	**12,0**	**14,0**
Material	**Embedment parameters in the plane surface [N/mm²]**					
OSB t > 8 mm (EN 300)	$f_{h,k}$=	$48 \cdot d^{-0,7} \cdot t^{0,1}$				
EGGER OSB 4 TOP predrilled t > 10 mm, (EN 13986)	$f_{h,k}$=	$50 \cdot d^{-0,6} t^{0,2}$				
EGGER OSB 4 TOP without pre-drilling t >10 mm, (EN 13986)	$f_{h,k}$=	$65 \cdot d^{-0,7} \cdot t^{0,1}$				
Plywood PLY t > 8 mm (EN 314-2)	$f_{h,k}$=	$65 \cdot d^{-0,7} \cdot t^{0,1}$				
Fibreboards hard (HB) t > 8 mm (EN 622-2)	$f_{h,k}$=	$30 \cdot d^{-0,3} \cdot t^{0,6}$				
Fibreboards medium (MB) t > 8 mm (EN 622-3)	$f_{h,k}$=	$28 \cdot d^{-0,6} \cdot t^{0,6}$				
Fibreboard soft (SB) 150 ≤ ρ_k ≤ 300 kg/m³ 18 mm ≤ t ≤ 60 mm	$f_{h,k}$=	$4 \cdot 10^{-4} \cdot t \cdot \rho_k^{1,2}$				
Fibreboard soft (SB) ρ_k < 150 kg/m³	$f_{h,k}$=	$15 \cdot 10^{-5} \cdot d^{-075} \cdot \rho_k^{2}$				
Particleboards (RPB) t > 8 mm (EN 312)	$f_{h,k}$=	$50 \cdot d^{-0,6} \cdot t^{0,2}$				

1.1.6 Embedment strength $f_{h,k}$ for the use in combination with predrilled steel plates

The characteristic embedment strength of »fischer PowerFull II« screws in steel plates can be taken like following into account.

$$f_{h,k} = k_{pl} \cdot 600 \text{ [N/mm²]} \quad (12)$$

with

k_{pl}=0,5 for the ratio d / t ≤ 0,5 for outer steel plates
k_{pl}=1,0 for the ratio d / t > 1,0 for outer steel plates
Intermediate values should be linearly interpolated

Note: The 600 N/mm² should be used for steel and may be different for other materials. The metal plate should be verified in accordance to the corresponding Eurocode (e. g. EN 1993-1-1, EN 1993-1-8).

1.1.7 Effective number of screws per row n_{ef}

For laterally loaded screws, the rules for multiple fastener connections in EN 1995-1-1, section 8.3.1.1 respectively 8.5.1.1, should be applied.

1.2 Axial resistance of the screw under tension $F_{ax,t,Rd}$

The design axial tensile resistance $F_{ax,t,Rd}$ for a group of axially loaded screws is limited by the head pull-through parameter, the withdrawal capacity and the tensile capacity of the screw itself and should be considered as following.

$$F_{ax,t,Rd} = \min \begin{cases} n_{ef} \cdot F_{ax,t,Rd,1} \\ n \cdot F_{ax,t,Rd,2} \end{cases} \tag{13}$$

with

$$F_{ax,t,Rd,1} = \frac{k_{mod}}{\gamma_M} \cdot \min \begin{cases} \text{Headside: } \max\left\{F_{head,Rk}; F_{ax,\alpha,Rk}\right\} \\ \text{Tipside: } F_{ax,\alpha,Rk} \end{cases} \tag{14}$$

and

$$F_{ax,t,Rd,2} = \frac{f_{tens,k}}{\gamma_{M,2}} \tag{15}$$

Where

k_{mod}	Modification factor see also EN 1995-1-1 [-]
n	Number of screws in a connection [-]
n_{ef}	Effective number of screws in a connection [-]
γ_M	Partial factor for the screw, see EN 1995-1-1; *Note: Recommended value γ_M=1,30*
$F_{head,Rk}$	Characteristic head pull-through resistance in according to see Annex D15 [N]
$F_{ax,\alpha,Rk}$	Characteristic withdrawal resistance according Annex D10, D11, D12, D13 [N]
$F_{ax,t,Rd}$	Design withdrawal resistance [N]
$F_{ax,t,Rd,1}$	Design withdrawal resistance on the timber side [N]
$F_{ax,t,Rd,2}$	Design tension strength of the screw itself [N]
$f_{tens,k}$	Characteristic tensile strength of the »fischer PowerFull II« screws, see Table C1.1 [N], *Note: Values in Table C1.1 are given in [kN]*
$\gamma_{M,2}$	Partial factor for resistance of cross-sections of a metal fastener in tension to fracture, see EN 1993-1-8; *Note: Recommended value $\gamma_{M,2}$=1,25*

1.2.1 Withdrawal capacity $F_{ax,\alpha,Rk}$ for use in Structural Timber (ST-c, FST and GST) and Parallel Laminated Timber (GLT-c)

In Structural Timber (ST-c) and Glued Laminated Timber of softwood (GLT-c), the characteristic withdrawal capacities of »fischer PowerFull II« screws, with an angle of 0° ≤ α ≤ 90° for self-tapping screws with tip types other than drilling tip (see Annex A1, A2) or 30° ≤ α ≤ 90° for self-tapping screws with drilling tip (see Annex A3, A4), shall be calculated according to equation (16) or (17).

$$F_{ax,\alpha,Rk} = k_{ax} \cdot f_{ax,k} \cdot d \cdot l_{ef} \cdot \left(\frac{\rho_k}{350}\right)^{0,8} \tag{16}$$

$$F_{ax,\alpha,Rk} = k_{ax} \cdot f_{ax,k} \cdot d \cdot l_g \cdot \left(\frac{\rho_k}{350}\right)^{0,8} \tag{17}$$

with

$$k_{ax} = \min \begin{cases} 0,3 + (0,7 \cdot \alpha)/45° \\ 1,00 \end{cases} \tag{18}$$

For screws arranged under an angle between screw axis and grain-direction $\alpha \leq 15°$ (see Figure D2.1), the threaded penetration length (inclusive the tip of the screw) has to fulfil equation (19).

$$l_{ef} = \min \begin{cases} \dfrac{4 \cdot d}{\sin \alpha} \\ 20 \cdot d \end{cases} \tag{19}$$

For screws arranged under an angle between screw and grain-direction $15° < \alpha \leq 90°$ the minimum threaded penetration length must be $l_{ef} \geq 4 \cdot d$. For the fixing of rafters or similar building parts, the point side penetration length must be at least 40 mm (i.e. $l_{ef} \geq 40$ mm).

1.2.2 Withdrawal capacity $F_{ax,\alpha,Rk}$ for use in Structural Timber (ST-d, GLT-d) Laminated Veneer Lumber (LVL-d) according to ETA-14/0354

The characteristic withdrawal capacity in Structural Timber (ST-d) and Laminated Veneer Lumber in hardwood (LVL-d) according to ETA-14/0354 of »fischer PowerFull II« screws with an angle of $0° \leq \alpha \leq 90°$ shall be calculated according to equation (20) or (21).

$$F_{ax,\alpha,Rk} = k_{ax} \cdot f_{ax,k} \cdot d \cdot l_{ef} \cdot \left(\frac{\rho_k}{730} \right)^{0,8} \tag{20}$$

$$F_{ax,\alpha,Rk} = k_{ax} \cdot f_{ax,k} \cdot d \cdot l_{g} \cdot \left(\frac{\rho_k}{730} \right)^{0,8} \tag{21}$$

with

$$k_{ax} = \min \begin{cases} 0,3 + (0,7 \cdot \alpha) / 45° \\ 1,00 \end{cases} \tag{22}$$

The penetration length in hardwood has to be at least $l_{ef} \geq 4 \cdot d$.

Where

d	Outer thread diameter of the screw [mm]
$f_{ax,k}$	Characteristic withdrawal strength parameter, see Table D9.1 and D9.2 [N/mm²]
k_{ax}	Factor to consider the influence between the angle of the screw axis and the grain-direction [-]
l_{ef}	Penetration length of the threaded part of the screw, including the screw head and/or screw tip [mm]
l_g	$l_g = l_{ef} - l_t$ [mm] Penetration length of the threaded part of the screw with d = const. Values for l_t see Annexes A; l_t …length of the screw tip [mm]
n_{ef}	Effective number of screws, see Annex D11 [-]
$F_{ax,\alpha,Rk}$	Characteristic withdrawal capacity of the screw with an angle α to the grain-direction [N]
α	Angle between grain-direction and the screw axis [°]
ρ_k	Characteristic gross density of the timber/wood-based member [kg/m³]

Table D9.1: Characteristic values of the withdrawal strength parameter in Structural Timber in softwood and Laminated Veneer Lumber according to ETA-14/0354, referred to l_{ef}

Outer thread diameter *d*, with/without drilling tip [mm] **Values referred to the effective length l_{ef},** **see equations (16) and (21)**			**6,0**	**8,0**	**10,0**	**12,0**	**14,0**
Product	**Abbreviation**	**Parameter**	**Withdrawal capacity [N/mm²]**				
Structural Timber Parallel Laminated Timber	*ST-c, ST-d, GL-d, FST, GST, GLT-c BGLT*	$f_{ax,k}$	12,6	11,8	11,2	10,0	9,5
Cross Laminated Timber in the plane surface	*CLT*	$f_{ax,k}$	12,6	11,8	11,2	10,0	9,5
LVL according to ETA-14/0354	*LVL-d*	$f_{ax,90\|90,k}$	33,5	25,9	23,6	-	-
		$f_{ax,90\|00,k}$	31,0	30,0	24,3	-	-
		$f_{ax,00\|00,k}$	22,0	21,7	20,5	-	-

Note: In equations (20) and (21) for the paramter $f_{ax,k}$ depending on the screw-in direction the values $f_{ax,90|90}$, $f_{ax,90|00}$ or $f_{ax,00|00}$ should be used.

Table D9.2: Characteristic values of the withdrawal strength parameter in Structural Timber in softwood and Laminated Veneer Lumber according to ETA-14/0354, referred to l_g

Outer thread diameter *d*, with/without drilling tip [mm] **Values referred to the length with constant diameter l_g,** **see equation (17) and (21)**			**6,0**	**8,0**	**10,0**	**12,0**	**14,0**
Product	**Abbreviation**	**Parameter**	**Withdrawal capacity [N/mm²]**				
Structural Timber Parallel Laminated Timber	*ST-c, FST, GST, GLT-c BGLT*	$f_{ax,k}$	20,0	16,0	13,6	-	-
Cross Laminated Timber in the plane surface	*CLT*	$f_{ax,k}$	20,0	16,0	13,6	-	-
LVL according to ETA-14/0354	*LVL-d*	$f_{ax,90\|90,k}$	48,0	38,8	30,5	-	-
		$f_{ax,90\|00,k}$	44,6	36,0	31,6	-	-
		$f_{ax,00\|00,k}$	31,6	31,9	30,6	-	-

Note: In equations (20) and (21) for the paramter $f_{ax,k}$ depending on the screw-in direction the values $f_{ax,90|90}$, $f_{ax,90|00}$ or $f_{ax,00|00}$ should be used.

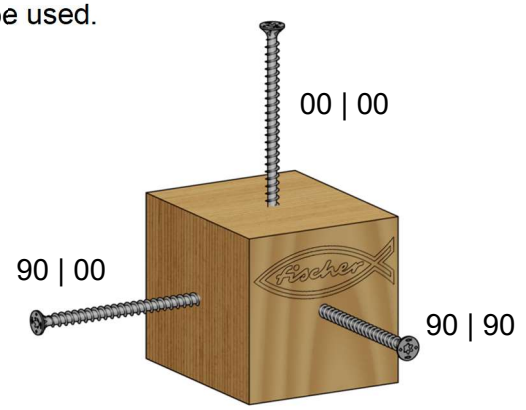

Figure D9.1: fischer PowerFull II in LVL-d (figure not to scale)

1.2.3 Withdrawal capacity $F_{ax,Rk}$ for use in Cross Laminated Timber (CLT)

If there are no other technical specification (ETA or hEN) for Cross Laminated Timber (CLT), the withdrawal capacity for screws can be calculated as following.

Screws in the plane surface

The withdrawal capacity for screws with $d \geq 6$ mm in the plane surface of CLT-c elements should be assumed as for Structural Timber according to equation (16) based on a characteristic density in accordance to equation (23), if there are no other specifications given. If necessary, gaps between the single lamellas have to be considered.

$$\rho_k = 1{,}1 \cdot \rho_{lay,k} \tag{23}$$

Where

ρ_{lk} Characteristic density for the calculation in equation (16) [kg/m³]

$\rho_{lay,k}$ Lowest characteristic density of the lamellas in a layer of the CLT-c element [kg/m³]

Screws in the narrow side

The withdrawal capacity for screws in the narrow side of CLT-elements should be assumed according to equation (24).

$$F_{ax,Rk} = 20 \cdot d^{0,8} \cdot l_{ef}^{\ 0,9} \tag{24}$$

If possible the screws in the narrow side should be driven perpendicular into the grain-direction of the lamella. To avoid unwanted effects by screwing in only parallel to the grain direction and gaps between lamellas in the narrow side of CLT panels the considered penetration length l_{ef} in equation (24) should be decreased by $3 \cdot d$ (for calculation only).

If it is guaranteed that the angle between the grain-direction of the lamellas and the screw axis is ≥ 30° the characteristic withdrawal capacity from equation (24) can be increased of about 25 %.

For screws penetrating more than one layer of Cross Laminated Timber, the different layers may be considered proportionally.

1.2.4 Effective number of screws n_{ef}

For axially loaded screws in tension, where the external force is parallel to the screw axis, the following rules should be applied.

$$n_{ef} = \max \begin{cases} n^{0,9} & \text{in general without torque controlled insertion drivers} \\ 0,9 \cdot n & \text{for screws } 30° \leq \varepsilon \leq 90° \text{ and torque controlled insertion drivers} \\ 0,9 \cdot n & \text{for a group with more than 10 screws in a timber-to-timber connection} \\ & \text{(e.g. ST, PL, CL} \\ n & \text{for a group up to 10 screws in a timber-to-timber connection} \\ & \text{(e.g. PL, CL} \end{cases} \quad (25)$$

Where

n Number of screws acting together in a joint [-]

α Angle between screw axis and grain-direction [°]

Note: For screws used as reinforcement perpendicular to the grain direction (compression and tension), shear reinforcement under an angle to the grain direction (e.g. reinforcement of holes in beams) or inclined screws as fasteners in mechanically jointed beams or columns n_{ef} = n.

1.3 Head pull-through capacity $F_{head,Rk}$

1.3.1 Head pull-through capacity $f_{head,k}$ for use in Solid Timber (ST-c, FST, GST, BGLT) Glued Laminated Timber (GLT-c), Cross Laminated Timber (CLT) and Wood-based panels (WFB, WPB)

The characteristic head pull-through capacity of »fischer PowerFull II« screws in Solid Timber can be calculate as following.

$$F_{head,Rk} = n_{ef} \cdot f_{head,k} \cdot d_h^{\,2} \cdot \left(\frac{\rho_k}{350}\right)^{0,8} \qquad (26)$$

Where

d_h Diameter of the screw head [mm]

n_{ef} Effective number of screw heads according to Annex D7 and D12

ρ_k Characteristic density of the timber element [kg/m³]

$f_{head,k}$ Characteristic head pull-through parameter for »fischer PowerFull II« given below [N/mm²]

For »fischer PowerFull II« screws with countersunk heads (Annex A1 and A3) the characteristic head pull-through parameter in connections with timber and wood-based panels with thicknesses of more than 20 mm can be considered with $f_{head,k}$ = 12,0 N/mm².

For »fischer PowerFull II« screws with cylindrical heads (Annex A2 and A4) the characteristic head pull-through parameter shall be disregarded (i.e. $f_{head,k}$ = 0 N/mm²).

The characteristic head pull-through parameter for screws with countersunk head shapes in connections with wood-based panels with thicknesses between 12 mm and 20 mm can be considered with $f_{head,k}$ = 8 N/mm².

Screws with countersunk heads (Annex A1 and A3) in connections with wood-based panels with a thickness below 12 mm (minimum thickness of the wood-based panels of $1,2 \cdot d$ with d as outer thread diameter) can be considered with $f_{head,k}$ = 8 N/mm², limited to $F_{ax,Rk}$ = 400 N.

For screws with a countersunk head and a dimeter d of 14 mm the head pull-through capacity given in equation (26) must be reduced by 15 %.

In steel-to-timber connections the head pull-through capacity may be disregarded.
Note: An accurate fit is important to avoid any kind of notch stresses see also Annex B4

Note: The tear-off capacity of the screw head is greater than the tensile capacity of the screw

1.4 Compression capacity in Solid Timber (ST, FST, GST) and Glued Laminated Timber (GLT-c, BGLT) and Laminated Veneer Lumber (LVL-c)

The design compressive capacity $F_{ax,Rd}$ of »fischer PowerFull II« screws with full thread along the length embedded in timber shall be calculated as following.

$$F_{ax,\alpha,Rd} = \min \begin{cases} F_{ax,\alpha,Rd} \\ F_{b,Rd} \end{cases} \tag{27}$$

Where

$F_{ax,\alpha,Rd}$ see Annex D7 to D10 [N]

$F_{b,Rd}$ see Annex D13 to D14 [N]

$$F_{b,Rd} = 1{,}18 \cdot \kappa_c \cdot N_{pl,Rd} \tag{28}$$

With

$$\begin{aligned} \kappa_c &= 1 && \text{for } \bar{\lambda} \le 0{,}2 \\ \kappa_c &= \frac{1}{k + \sqrt{k^2 - \bar{\lambda}^2}} && \text{for } \bar{\lambda} > 0{,}2 \end{aligned} \tag{29}$$

and

$$k = 0{,}5 \cdot \left[1 + 0{,}49 \cdot \left(\bar{\lambda} - 0{,}2 \right) + \bar{\lambda}^2 \right] \tag{30}$$

The relative slenderness ratio shall be calculated with

$$\bar{\lambda} = \sqrt{\frac{N_{pl,k}}{N_{b,k}}} \tag{31}$$

With the characteristic value for the axial capacity in case of plastic analysis referred to the outer thread diameter *d* (=outer thread diameter of the screws).

$$N_{pl,k} = \frac{(0{,}7 \cdot d)^2 \cdot \pi}{4} \cdot f_{y,k} \tag{32}$$

With

d Outer thread diameter of the screws [mm]

$f_{y,k}$ Yield strength, see Annex C1, Table C1.1 [N/mm²]

And the characteristic ideal elastic buckling load for screws in timber members

$$N_{b,k} = \sqrt{c_h \cdot E_s \cdot I_s} \tag{33}$$

With the

Elastic foundation of the screw

$$c_h = \left(0{,}19 + 0{,}084 \cdot d\right) \cdot \rho_k \cdot \left(\frac{90° + \alpha}{180°}\right) \tag{34}$$

Modulus of elasticity

$$E_s = 210.000\ \mathrm{N/mm^2} \tag{35}$$

and the second moment of area

$$I_s = \frac{\pi \cdot (0{,}7 \cdot d)^4}{64} \tag{36}$$

Note: The compressive capacity must be modified for $F_{ax,\alpha,Rd}$ with the factors k_{mod} and γ_M for timber connection according to EN 1995-1-1 while $N_{pl,Rd}$ the partial-factor $\gamma_{M,1}$ for steel buckling according to EN 1993-1-1 and/or national standards respectively have to be considered.
For γ_M, $\gamma_{M,1}$ the values γ_M =1,3 and $\gamma_{M,1}$ =1,0 are recommended.

For screws loaded in compression which are not embedded in timber, values from Table D14.1 can be used for the critical buckling load. The buckling length for screws arranged between two timber members should be increased 10 mm each side, so in total 20 mm to consider effects of elastic restraints. If the head of the screws are supported by thick steel sheets and rotation of the head can be avoided the buckling length can decreased according to Euler's Theorem.

Table D14.1: Buckling capacities of screws with free span length in [kN]

Buckling length [mm]	Nominal diameter *d* [mm]			
	6,0	8,0	10,0	12,0
≤ 120	2,32	4,28	6,76	18,80
140	1,75	3,27	5,21	14,90
160	1,38	2,57	4,12	12,00
180	1,10	2,08	3,33	9,85
200	0,91	1,71	2,75	8,20
220	0,76	1,43	2,31	6,93
240	0,64	1,21	1,96	5,92
260	0,55	1,04	1,69	5,12
280	0,48	0,91	1,47	4,48
300	0,42	0,79	1,29	3,94
320	0,37	0,70	1,14	3,49
340	0,33	0,62	1,01	3,12
360	0,29	0,56	0,91	2,80
380	0,26	0,50	0,82	2,52
400	0,24	0,46	0,74	2,29
420	0,22	0,42	0,68	2,09

1.5 Combined laterally and axially loaded screws

For connections subjected to a combination of axial and lateral loads, the following equation has to be considered.

$$\left(\frac{F_{ax,Ed}}{F_{ax,Rd}}\right)^2 + \left(\frac{F_{v,Ed}}{F_{v,Rd}}\right)^2 \leq 1 \qquad (37)$$

Where

$F_{ax,Ed}$	Axial design action [N]
$F_{v,Ed}$	Lateral design action [N]
$F_{ax,Rd}$	Design load-carrying capacity of axially loaded screws [N]
$F_{v,Rd}$	Design load-carrying capacity of laterally loaded screws [N]

1.6 Slip modulus in the Serviceability Limit State

1.6.1 Laterally loaded screws

For laterally loaded »fischer PowerFull II« screws, the slip modulus, predrilled or non-predrilled, for the serviceability limit state (SLS) should be calculated according to EN 1995-1-1 independent of the load grain-direction angle α with equation (38).

$$K_{v,ser} = k_{st} \cdot k_{sp} \cdot C_{v,ser} \tag{38}$$

With

k_{st} $\quad k_{st} = \begin{cases} 1 & \text{for timber-timber connections} \\ 2 & \text{for steel-timber connections} \end{cases}$

k_{sp} Number of shear planes

$C_{v,ser}$ Slip modulus in the Serviceability limit state (SLS) each shear plane, Table D17.1 [N/mm]

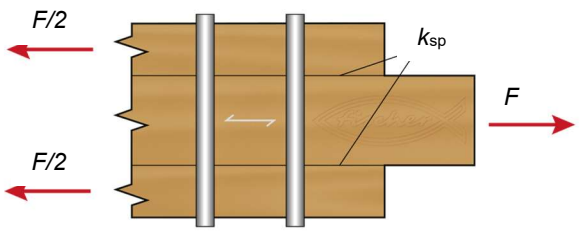

Figure D16.1: Definition of the shear plane k_{sp} (figure not to scale)

1.6.2 Axially loaded screws

For axially loaded screws the slip modulus for the serviceability limit state (SLS) can be calculated according to equation (39).

$$K_{ax,ser} = C_{ax,ser} \tag{39}$$

With

d Outer thread diameter [mm]

l_{ef} Penetration length of the threaded part , including the tip in [mm]

$C_{ax,ser}$ Slip modulus in the serviceability limit state (SLS), Table D17.1 [N/mm]

1.6.3 Slip modulus in the ultimate limit state

To consider the slip modulus K_u in the ultimate limit state (ULS) K_{ser} has to be reduced for both directions (laterally and axially) according to EN 1995-1-1 with

$$K_u = 2/3 \cdot K_{ser} \tag{40}$$

Table D17.1: Mean values of the Slip-modules in Serviceability Limit State (SLS) in the plane surface of timber elements and wood-based panels

Outer thread diameter *d* [mm]	**6,0**	**8,0**	**10,0**	**12,0**	**14,0**
Material	**Lateral Slip-Modulus $C_{v,ser}$ [N/mm]**				
Solid Timber Glued Laminated Timber Softwood and Hardwood (EN 338, EN 15497, EN 14080)	$\frac{\rho_m^{1,5} \cdot d}{23}$				
OSB t > 8 mm (EN 300)	$6{,}8 \cdot \rho_m \cdot d^{-0,4}$				
Fibreboards hardboards (HDF) t > 8 mm (EN 622-2)	$9 \cdot \rho_m \cdot d^{-0,9}$				
Particleboards t > 8 mm (EN 312)	$3 \cdot \rho_m \cdot d^{-0,4}$				
LVL Soft- and Hardwood (EN 14374)	$\frac{\rho_m^{1,5} \cdot d}{20}$				
Material	**Axial Slip-Modulus $C_{ax,ser}$ [N/mm]**				
Softwood $\rho_k \geq 350$ kg/m³ independent of the angle α	$32 \cdot d \cdot l_{ef}$				
Hardwood $\rho_k \geq 510$ kg/m³ independent of the angle α	$38 \cdot d \cdot l_{ef}$				
OSB t > 24 mm (EN 300)	$10 \cdot d \cdot l_{ef}$				
Fibreboards t > 24 mm (EN 622-2, EN 622-3)	$15 \cdot d \cdot l_{ef}$				
Particleboards t > 24 mm (EN 312)	$10 \cdot d \cdot l_{ef}$				
LVL (EN 14374) Soft- and Hardwood $\rho_k \geq 480$ kg/m³ $\alpha = 90\|90$, see Figure D9.1	$28 \cdot d \cdot l_{ef}$				

Mechanically jointed beams

»fischer PowerFull II« screws with a full thread may be used for connections in structural members which are composed of several parts in mechanically jointed beams or columns. The axial slip modulus K_{ser} for the serviceability limit state per side should be taken independent of the angle α to the grain-direction with equation (41).

$$K_{ser} = 780 \cdot d^{0,2} \cdot l_{ef}^{\ 0,4} \tag{41}$$

Where

d Outer thread diameter of the screw [mm]

l_{ef} Penetration length in the structural member [mm], see Annex B

The calculation of the load-carrying capacity of the single screw in direction of the shear forces can be assumed with the help of Annex D.

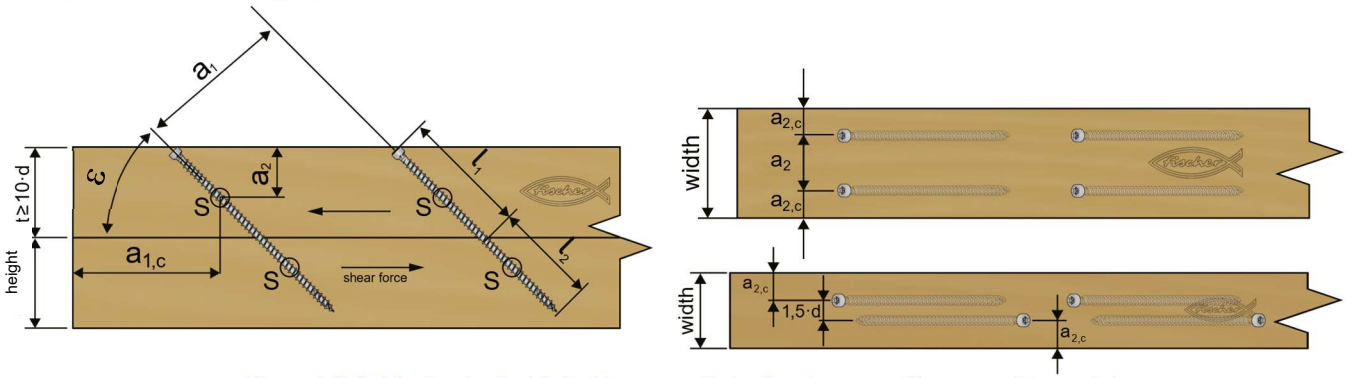

Figure E1.1: Mechanically jointed beams with inclined screws (figures not to scale)

Where

S Centroid of the part of the screw in the timber

For a crossed screw couple, the minimum spacing between the crossing screws is 1,5 · d.
Minimum distances and spacings, see also Annex B5 till B9.
0° ≤ ε ≤ 90° for all tip types except screws with drilling tips, see also Annexes A1, A2.
0° ≤ ε ≤ 90° for all tip types with drilling tips, see also Annex A3, A4.

Mechanically jointed beams

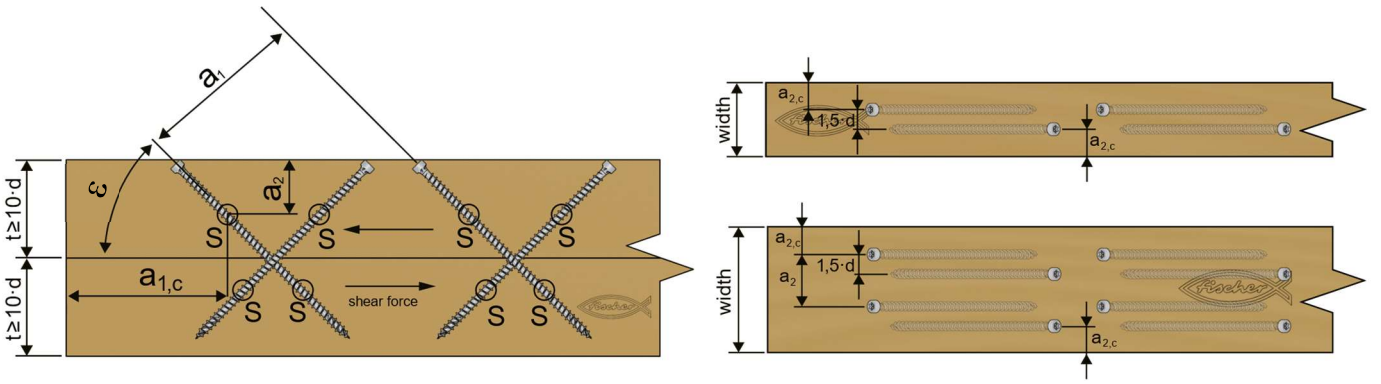

Figure E2.1: Mechanically jointed beam with crossing screws (figures not to scale)

Where

S Centroid of the part of the screw in the timber

For a crossed screw couple, the minimum spacing between the crossing screws is 1,5 · d.

Minimum distances and spacings, see also Annex B5 to B9.
0° ≤ ε ≤ 90° for all tip types except screws with drilling tips, see also Annex A1, A2.
0° ≤ ε ≤ 90° for all tip types with drilling tips, see also Annex A3, A4.

Note: For crosswise screw arrangements the effects of friction should be neglected in mechanically jointed beams, because screws inclined against the shear direction (compression forces in the screws) lead to lift up effects.

Reinforcements of members with compression stresses perpendicular to the grain

<u>- Geometry factors for end and intermediate supports</u>

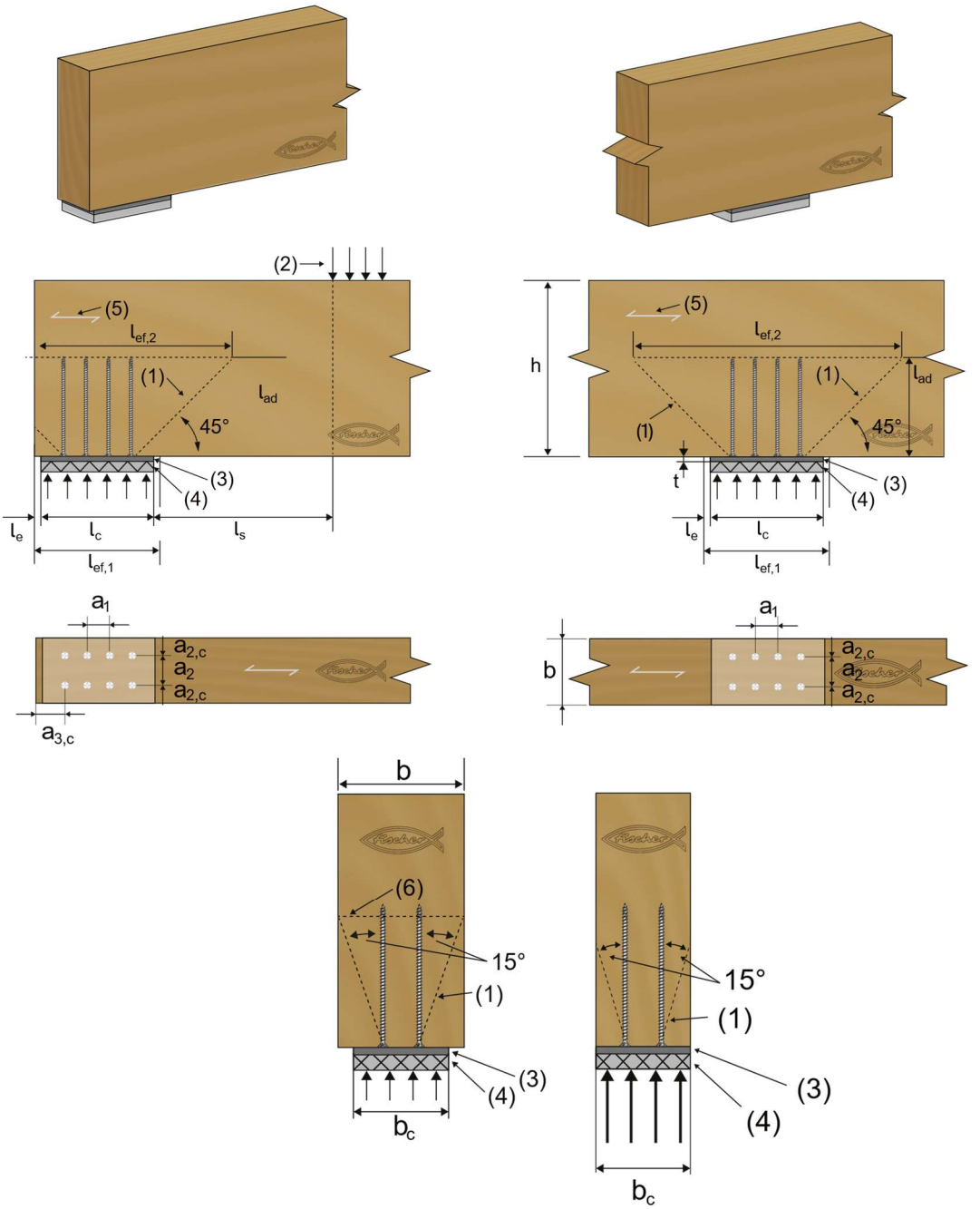

Figure F1.1: Reinforcements with screws perpendicular to the grain-direction (figures not to scale)

Reinforcements to transfer compression stresses perpendicular to the grain through the members

- Geometry factors and definitions

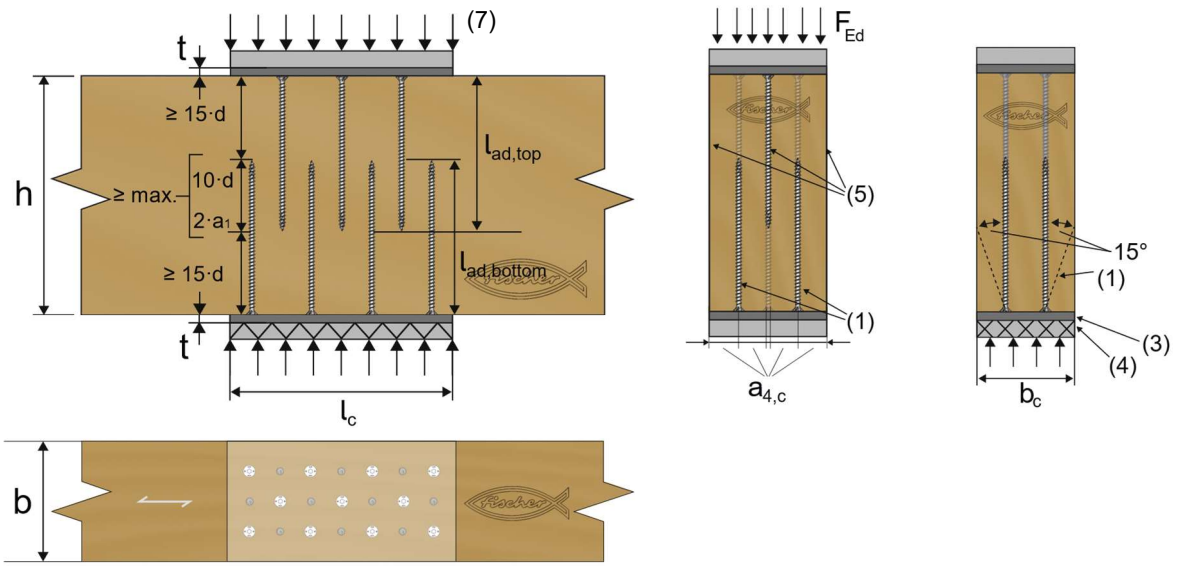

Figure F2.1: Reinforcement to transfer loads perpendicular to the grain-direction (figures not to scale)

Where

(1)	Load distribution
(2)	Concentrated load
(3)	Stiff bearing material (e.g. steel plate, see also equation (48))
(4)	Intermediate elastic layer (e.g. elastomeric bearing)
(5)	Grain-direction
(6)	Plne of fully activated member width b
(7)	Compression load to be transferred through the member
b	Member width [mm]
b_c	Width of the contact area [mm]
l_e	Clear spacing parallel to the grain between the end of the member and the contact area [mm]
l_c	Length of the contact area [mm]
$l_{ef,1}$	Effective contact length parallel to the grain in the plane defined by the contact area; For $\alpha < 90°$ $l_{ef}=l$ [mm]
$l_{ef,2}$	Effective distribution length parallel to the grain in the plane defined by the screw tips [mm]
l_{ad}	Penetration length of the threaded part of the screw in the timber member [mm]
a_i	Minimum spacings and end distances of the screws [mm], see Annex B6, B7

Design of PowerFull II screws for the structural use in timber constructions

General requirements
The screws should be evenly distributed over the reinforced contact area. The angle between the screw axis and the grain direction should be between 45° and 90°. The angle between the screw axis and the contact surface (supporting area) must be 90°. The screws should be applied with its head flush to the contact area.

General requirements contact area:
The contact area must have an adequate stiffness (e.g. steel plate with an adequate thickness, see equation (48), and evenness to prevent penetration of the *»fischer PowerFull II«* screw heads into the contact member. In addition, it should be considered to ensure an adequate rotational capacity to provide an equal distribution of the compression force over all screws

The contact width at the tip of the reinforcement should be equal to the member width *b*, see D9.1.

For reinforcements which fulfil the requirements above, the characteristic resistance of the reinforced contact area $F_{c,90,Rk}$ should be taken as the minimum value of equation (42).

$$F_{c,90,Rk} = \min \begin{cases} k_{c,90} \cdot b_c \cdot l_{ef,1} \cdot f_{c,90,k} + n \cdot \left\{ F_{ax,\alpha,Rk},\ F_{b,Rk} \right\} \\ b \cdot l_{ef,2} \cdot f_{c,90,k} \end{cases} \tag{42}$$

With

$$l_{ef,1} = l_c + \min\{30\ \text{mm}, l_e,\ l_s/2, l_c\} \quad \text{for end supports} \tag{43}$$

$$l_{ef,1} = l_c + \min\{30\ \text{mm},\ l_s/2, l_c\} \quad \text{for intermediate supports} \tag{44}$$

$$l_{ef,2} = l_{ad} + (n_0 - 1) \cdot a_1 + \min\{l_{ad}; a_{3c}\} \quad \text{for end supports} \tag{45}$$

$$l_{ef,2} = 2 \cdot l_{ad} + (n_0 - 1) \cdot a_1 \quad \text{for intermediate supports} \tag{46}$$

$$F_{b,Rk} = 1{,}18 \cdot k_c \cdot N_{pl,Rk} \quad \text{see Annex D13} \tag{47}$$

The value of $k_{c,90}$ should be taken as 1,0 unless the following conditions apply. For members on discrete supports loaded by distributed loads and/or by concentrated loads at clear distance from the support $l_s \geq 2h$ (see Figure F2.1) the value of $k_{c,90}$ should be taken as:

- $k_{c,90}$ = 1,5 for Solid Timber from softwood
- $k_{c,90}$ = 1,75 for Glued Laminated Timber from softwood, provided that $l_c \leq 400$ mm

Note: A series of point loads acting at close centres (e.g. joists of rafters at centres < 625 mm) can be regarded as a distributed load.

Reinforcements to transfer compression stresses perpendicular to the grain

The contact material (e.g. steel plate) should be designed for the load introduced by the screw head. The thickness of steel plates *t* may be assumed adequate if equation (48) is satisfied.

$$t \geq \max \begin{cases} 5,0 \\ 1,45 \cdot \sqrt{\dfrac{F_{c,\alpha,Ed}}{f_{y,d}}} \end{cases} \tag{48}$$

Where

t	Thickness of the steel plate [mm]
$F_{c,\alpha,Ed}$	Design compression force in one screw [N]
$f_{y,d}$	Design yield strength of the steel plate [N/mm^2]

Where rotation of the member results in indentation of the member due to the stiff contact material (e.g. steel plates), it is recommended to increase the rotational capacity (by e.g. an elastomeric bearing material), if the following limit in equation (49) is exceeded.

$$\Delta w = \varphi \cdot l / 2 \geq 1,0 \text{ mm} \tag{49}$$

Where

Δw	Relative deformation of the member from rotation at the edge of the contact [mm]
φ	Rotation of the member at the support at the maximum deflection [rad]
l	Contact length [mm]

Screws driven into the top and bottom of a member have to overlap.

The characteristic resistance may be assessed according to the upper part of equation (42), if

- the contact areas and the screws are arranged axially symmetric on both opposite sides; and
- the screws overlap at least 10·*d*, where *d* is the screw diameter; and the distance between the screw tips and the opposite contact area is at least 15·*d*

This may also be applied for members where compression forces acting on one contact area are higher compared to compression forces acting on the opposite contact area, if the resistances of the contact areas are proportional to the respective compression forces. In this case, linear addition of resistances, calculated for transfer of different types of loads or section forces, e.g. for section shear forces in the members and for the transfer of external compression forces through the member, may be applied.

Reinforcement of double tapered, curved and pitched cambered beams

- Geometry factors and definitions (exemplary)

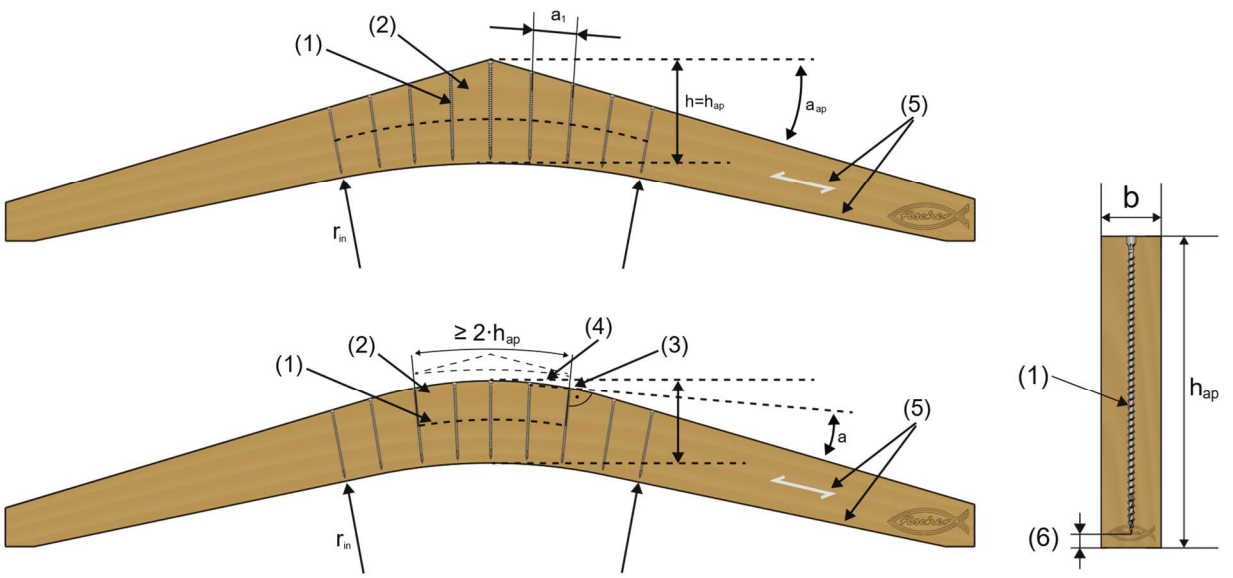

Figure G1.1: Internal reinforcement of beams with screws (figures not to scale)

Where

(1) Screw reinforcement, internal reinforcement
(2) Apex zone
(3) Secondary apex (inflection point)
(4) Mechanically jointed apex (no glued joint)
(5) (Recommended) grain-direction
(6) Distance to edge ≤ lamella thickness

Reinforcement of double tapered, curved and pitched cambered beams

Where reinforcement is applied in members from GLT, BGLT and LVL-P, GLVL-P in flatwise bending and double tapered beams from LVL-P, GLVL-P in edgewise bending from softwood to carry the full tensile stresses perpendicular to the grain is applied, the design tensile force in the reinforcement, $F_{t,90,Ed}$, may be calculated according to equation (50).

$$F_{t,90,Ed} = k_{ka} \cdot \sigma_{t,90,d} \cdot d \cdot a_1 \tag{50}$$

with

$$\sigma_{t,90,d} = k_p \cdot \frac{6 \cdot M_{ap,Ed}}{b \cdot h_{ap}^{\ 2}} \tag{51}$$

and

$$k_p = k_5 + k_6 \cdot \frac{h_{ap}}{r} + k_7 \left(\frac{h_{ap}}{r} \right)^2 \tag{52}$$

$$k_5 = 0,2 \cdot \tan \alpha_{ap} \tag{53}$$

$$k_6 = 0,25 - 1,5 \cdot \tan \alpha_{ap} + 2,6 \cdot \tan^2 \alpha_{ap} \tag{54}$$

$$k_7 = 2,1 \cdot \tan \alpha_{ap} - 4 \cdot \tan^2 \alpha_{ap} \tag{55}$$

Where

k_{ka}	Factor for the distribution of tensile stresses perpendicular to the grain along the beam axis:
k_{ka} = 1,0	for curved beams; for the inner quarters of the length of the volume exposed to tensile stresses perpendicular to the grain, measured from the apex, in double tapered and pitched cambered beams;
k_{ka} = 0,67	for the outer quarters of the length of the volume exposed to tensile stresses perpendicular to the grain, measured from the apex, in double tapered and pitched cambered beams;
$\sigma_{t,90,d}$	Design tensile stress perpendicular to the grain according to equation [N/mm²]
b	Beam width [mm]
a_1	Spacing of the reinforcement parallel to the grain at the height of the beam axis, see Figure G1.1 [mm]
k_p	Factor for the tensile stresses perpendicular to the grain from the deviation of bending stresses in the apex zone
$M_{ap,d}$	Design bending moment at apex [Nmm]
h_{ap}	Height of the beam at the apex, see Figure G1.1 [mm]
p_d	is the uniformly distributed load acting on the top of the beam over the apex area
k_5, k_6, k_7	Modification factors
r	Radius of the curved part of the beam, see Figure G1.1 [mm]
α_{ap}	Angle of the taper in the middle of the apex zone, see Figure G1.1 [°]

Reinforcement of double tapered, curved and pitched cambered beams

The spacing parallel to the grain of the reinforcement, a_1, may be adapted according to the distribution of tensile stresses perpendicular to the grain along the length of the volume under tensile stresses perpendicular to the grain.

The screw reinforcements should cover the full height of the beam excluding the outer laminations in bending tension. One reinforcing screw should be placed in the cross-section below the apex respectively secondary apex (inflection point). The spacing parallel to the grain of the reinforcement, a_1, measured at the upper side of the beam, should not be less than 250 mm but not greater than $0{,}75 \cdot h_{ap}$.

For curved or pitched cambered beams with mechanically jointed apex, see Figure G1.1, the reinforcement should be designed for:

- the tensile stresses perpendicular to the grain at the inflection points (secondary apex at the end of the mechanically jointed apex), and
- the tensile stresses perpendicular to the grain from curvature in the apex.

The reinforcement of curved or pitched cambered beams with mechanically jointed apex should be arranged as follows:

- The reinforcement at the inflection points should cover a length of at least $2 \cdot h_{ap}$ in direction of the apex (but at maximum the real length to the apex) and $1 \cdot h_{ap}$ in direction of the end of the beam
- The reinforcement from the curvature in the apex should be arranged in the remaining curved parts.
- Between both areas (see Figure G1.1) the spacing parallel to the grain of the reinforcement, a_1, may be linearly graded.
- Where the tensile stresses perpendicular to the grain from curvature in the apex are higher than the tensile stresses perpendicular to the grain at the inflection points, the associated reinforcement should be arranged over the whole curved length.

Reinforcment of notches

- Geometry factors and definitions

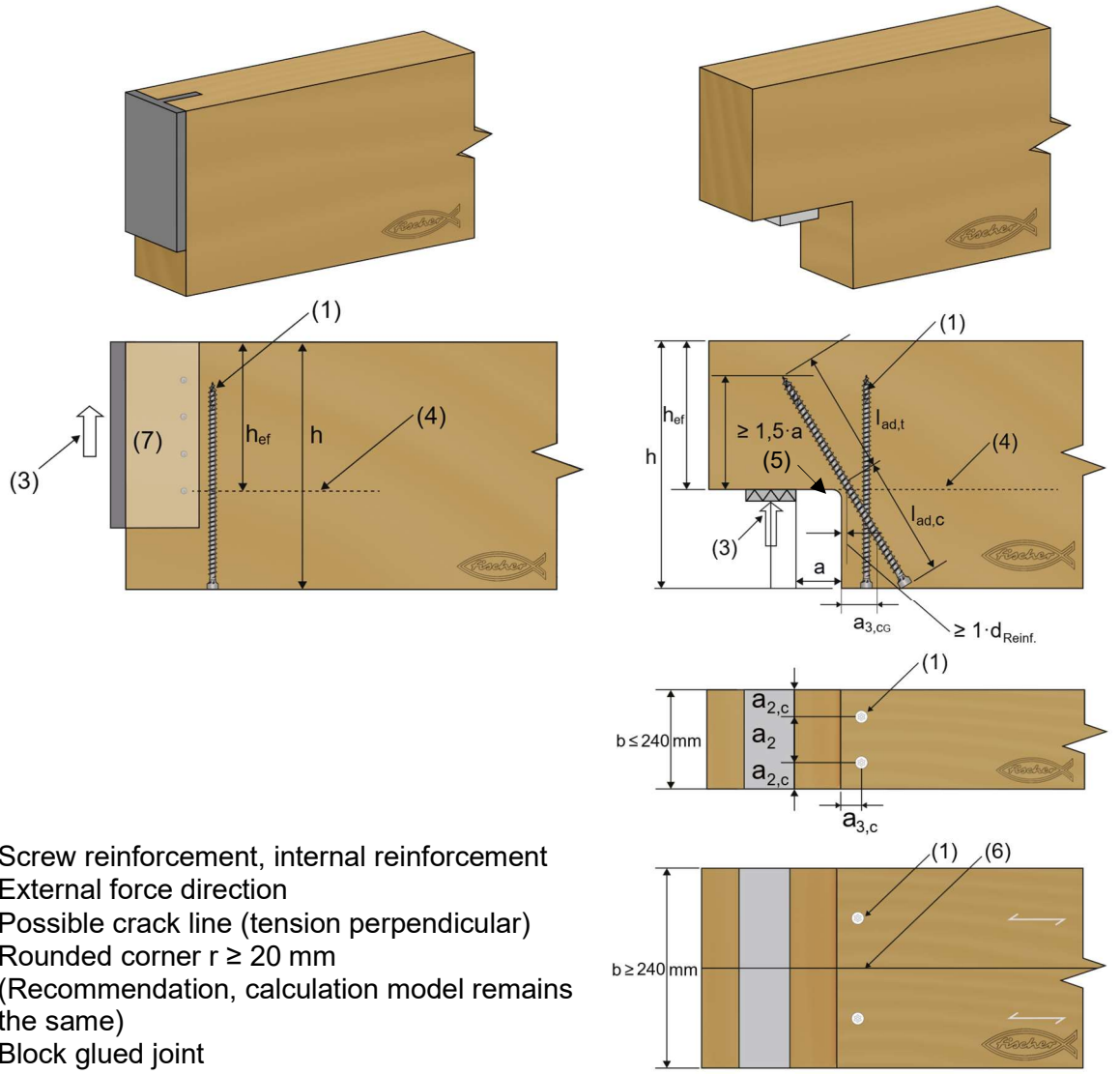

Where

(1) Screw reinforcement, internal reinforcement
(3) External force direction
(4) Possible crack line (tension perpendicular)
(5) Rounded corner r ≥ 20 mm (Recommendation, calculation model remains the same)
(6) Block glued joint
(7) Connector or group of fasteners

Figure H1.1: Notched beams, reinforcements with internal screws (figures not to scale)

Note: The inclined arrangement of the screw should be preferred, due to the fact the screw comes closer to the corner, even the calculation models are equal for both applications

Design of reinforcements of notches

The following rules apply for reinforced notches in members with rectangular cross-section from kiln-dried ST, FST, GST, GLT, BGLT, LVL-P, GLVL-P from softwood. For members with a rectangular notch on the same side as the support, see Figure, the reinforcement may be designed for a design tensile force $F_{t,90,Ed}$ according to equation

$$F_{t,90,Ed} = k_\alpha \cdot k_\beta \cdot V_{Ed} \cdot [3 \cdot (1-\alpha)^2 - 2 \cdot (1-\alpha)^3] \tag{56}$$

with

$$k_\alpha = 0,9 + 0,5 \cdot (2 \cdot \alpha - 1)^2$$
$$k_\beta = 1 + 2 \cdot \beta \tag{57}$$

Where

k_α, k_β	Factors to account for the notch geometry [-]
V_{Ed}	Design value of the shear force [N]
α	Ratio h_{ef} / h see Figure H1.1 [-]
h_{ef}	Effective height, see Figure H1.1 [mm]
h	Height of the beam [mm]
β	Ratio a/h, see Figure H1.1 [-]
a	Distance parallel to the grain from the line of action of the support reaction to the corner of the notch [mm]

For $\alpha \leq 0,6$ and $\beta \leq 0,2$, the product $k_\alpha k_\beta$ may be taken as $k_\alpha k_\beta = 1,3$ without further verification.

Reinforcement of notches

The reinforcement should cover the full height of the notched edge ($l_{ad,c} = (h - h_{ef})$). Where this requirement is not fulfilled ($l_{ad,c} < (h - h_{ef})$), the height of the unreinforced part of the notched edge should be taken as ($h - h_{ef}$). The minimum length $l_{ad,t}$ should be taken as $l_{ad,t} = \min\{l_{ad,c};\ 1,5\ a\}$, see Figure H1.1.

The tensile force $F_{t,90,Ed}$, according to equation (56) only one row of internal reinforcing elements at a distance $a_{3,c}$ from the edge of the notch should be considered, see Figure H1.1. The screw reinforcement may be inclined to reduce the distance between the peak tensile stresses perpendicular to the grain and the dowel-type reinforcement.

The tensile force, $F_{t,90,Ed}$, according to equation (56), for reinforcements positioned perpendicular to the grain, see Figure H1.1, the load-carrying capacity should be limited to twice the load-carrying capacity of the unreinforced notched beam.

Reinforcements of holes in beams

- Geometry factors and definitions

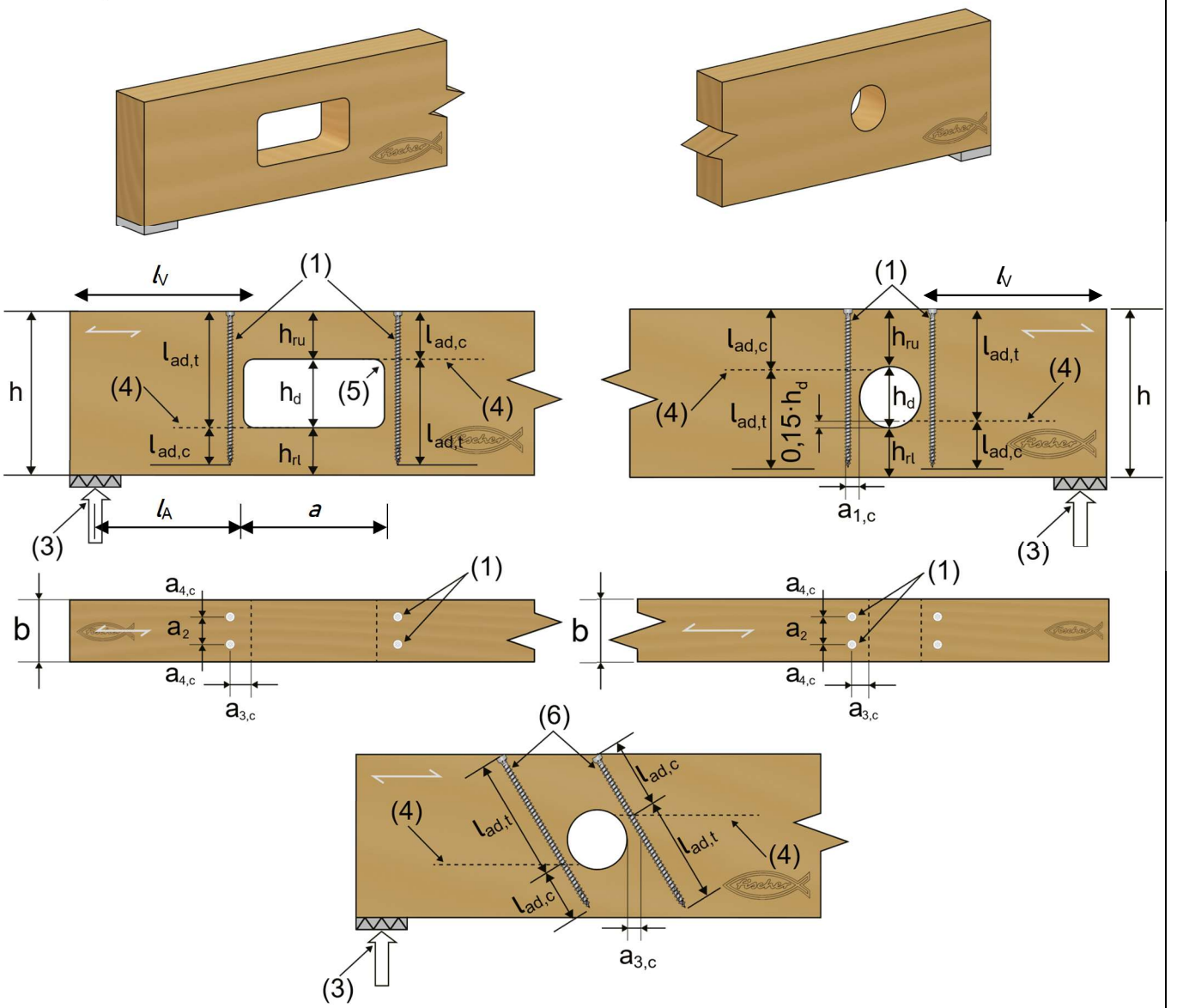

Figure I1.1: Holes in beams – reinforcements with internal screws (figures not to scale)

Note: The inclined arrangement of the screw should be preferred, due to the fact the screw comes closer to the corner, even the calculation models are equal for both applications

- Geometry factors and definitions

(1) Screw reinforcement, internal reinforcement
(3) External force direction
(4) Possible crack line ($0{,}15 \cdot h_d$, see Figure I1.1)
(5) Rounded corner: $r \geq 20$ mm, if $h_d \leq 200$ mm
$r \geq 40$ mm, if $h_d > 200$ mm
(6) Inclined reinforcement in case of e.g. high shear

Reinforcements of holes in beams

- Design of reinforcements of notches

The following rules apply for members with rectangular cross-section in edgewise bending from kiln-dried ST, FST, GST, GLT, BGLT, LVL-P, GLVL-P from softwood with reinforced holes which comply with the geometrical boundary conditions given in Table I2.1.

Table I2.1: Minimum distances and maximum dimensions of reinforced holes in beams with rectangular cross section

Minimum distances				Maximum dimensions		
End	Spacing	Support	Edges	Rectangular holes		Circular holes
$l_v \geq h$ [a]	Individual hole: $l_z \geq 1{,}0\ h$, at least 300 mm Group of circular holes: $l_z \geq d$ [b]	$l_A \geq h/2$	$h_{ru} \geq 0{,}15\ h$ [c] at least one lamination [d] $h_{rl} \geq 0{,}2\ h$ [c] at least 1,5 laminations [d]	$a/h_d \leq 2{,}5$ $a \leq h$	$h_d \leq 0{,}3\ h$ [e] $h_d \leq 0{,}4\ h$ [f]	$d \leq 0{,}3\ h$ [e] $d \leq 0{,}4\ h$ [f]

Note: For geometry parameters (e.g. l_A, l_v, l_z, h_{ru}, h_{rl}, h_d, e), see Figure I1.1.

[a] In applications with permanently dry or frequently changing climate, l_v should be increased ($l_v \geq 1{,}5\ h$)

[b] For groups of circular holes, a reduction factor k_{space} has to be considered

Note: The different distance limits cover the different effects of tension and compression stresses from bending.

[c] The effect of holes arranged eccentrically should be taken into account

[d] For LVL-P: $h_{ru} \geq 40$ mm, $h_{rl} \geq 60$ mm

[e] For holes with internal dowel-type reinforcement

[f] For holes with plane external reinforcement, e.g. panels, laminations, LVL-C and PMP and for holes in LVL-C and GLVL-C in edgewise bending.

- Design of reinforcements of holes

The reinforcement of holes in beams should be designed for a tensile force perpendicular to the grain, $F_{t,90,d}$, composed of $F_{t,V,d}$ from the transfer of shear stresses and $F_{t,M,d}$ from the transfer of bending stresses. All areas prone to splitting from tensile stresses perpendicular to the grain should be analysed. The reinforcement of a hole in beams (see Figure I1.1) should be designed for a design tensile force $F_{t,90,Ed}$ according to equation (58).

$$F_{t,90,Ed} = \frac{F_{t,90,V,Ed} + F_{t,90,M,Ed}}{k_{space}} \tag{58}$$

With

$$F_{t,90,V,Ed} = \frac{V_{Ed} \cdot 0,7 \cdot d_{hole}}{4 \cdot h} \cdot \left[3 - \left(\frac{0,7 \cdot d_{hole}}{h} \right)^2 \right] \cdot k_{diam} \tag{59}$$

$$k_{diam} = 1,1 + 1,3 \cdot \left[\frac{d_{hole}}{h} - \left(\frac{d_{hole}}{h} \right)^2 \right] \tag{60}$$

and

$$F_{t,90,M,Ed} = 0,09 \cdot \frac{M_{Ed}}{h} \left(\frac{d_{hole}}{h} \right)^2 \tag{61}$$

$$k_{space} = \begin{cases} 1 \\ 1 - 0,2 \cdot \dfrac{1,5 \cdot h - l_z}{1,5 \cdot h} \\ 1 - 0,4 \cdot \dfrac{5 \cdot h - l_z}{5 \cdot h} \end{cases} \tag{62}$$

$$k_{shape} = 1,25 + 0,3 \cdot \frac{a}{h_d} \cdot \left[4 \cdot \frac{V_{Ed}}{M_{Ed}} - 3 \cdot \left(\frac{V_{Ed} \cdot h}{M_{Ed}} \right)^2 \right] \tag{63}$$

Where

$F_{t,90,V,Ed}$	Design tensile force perpendicular to the grain from the transfer of shear stresses around the hole [N]
$F_{t,90,M,Ed}$	Design tensile force perpendicular to the grain from the transfer of bending stresses around the hole [N]
M_{Ed}	Design bending moment at the edge of the hole (absolute, i. e. positive value) [Nm]
V_{Ed}	Design shear force at the edge of the hole (absolute, i. e. positive value) [N]
a	Length of the rectangular hole [mm]
d_{hole}	Applicable diameter of the hole =d (hole diameter) for circular holes [mm] =$k_{shape} \cdot h_d$ for rectangular holes [mm]
h	Height of the beam at the edge of the hole [mm]
h_d	Height of the rectangular hole [mm]
k_{diam}	Factor for the stress distribution and the location of crack onset [-]
k_{space}	Factor for the possibility of placing up to three circular holes at closer spacing. For members with individual holes k_{space} = 1,0 [-]
l_z	Distance between two holes [mm]

Reinforcements of connections with laterally bolts

- Geometry factors and definitions

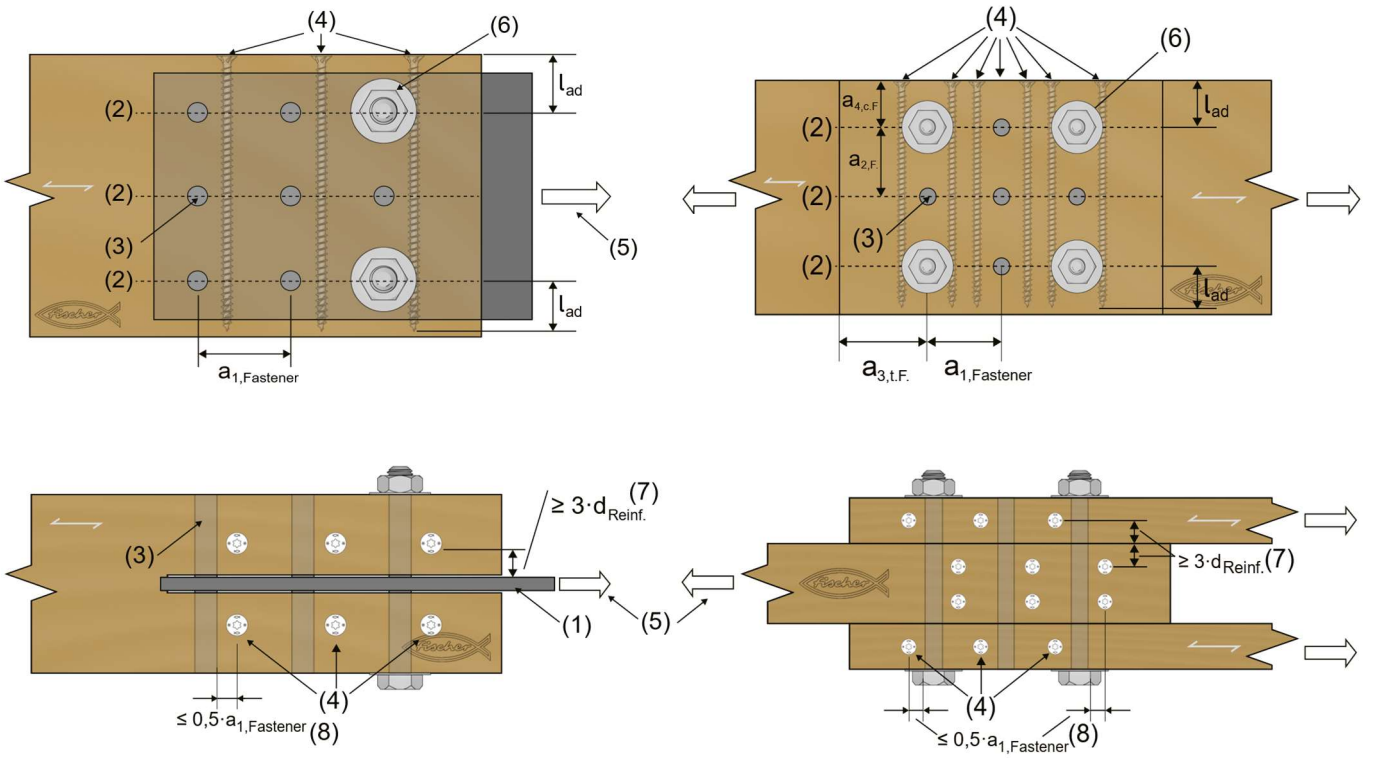

Figure J1.1: Shear connections with bolts – reinforcements with internal screws (figures not to scale)

Where

(1)	Slotted-in steel plate
(2)	Possible crack line
(3)	Dowel or bolt
(4)	Reinforcement
(5)	Direction of force
(6)	Tight-fitting bolts to reduce moment from eccentricity
(7)	Recommended: 3 $d_{Reinf.}$
(8)	Recommended: 2 $d_{Reinf.}$
$a_{1,Fastener}$	is the spacing parallel to the grain between two fasteners [mm]
$a_{3,t,Fastener}$	is the distance between the fastener and the loaded end [mm]
$d_{Reinf.}$	is the diameter of the dowel-type reinforcement [mm]

- Design of reinforcements of connections with laterally loaded bolts

Where splitting of the member from in GST, GLT-c, BGLT from softwood is prevented through sufficient reinforcement perpendicular to the grain (see Figure J1.1), the effective number of fasteners may be taken as $n_{ef} = n$.

The characteristic tensile force in the reinforcement may be taken as $F_{t,90,Ek} = 0{,}3 \cdot F_{v,k}$, with $F_{v,k}$ assessed for one bolt/dowel and one shear plane.

Reinforcements of connections with a tensile force component perpendicular to the grain

- Geometry factors and definitions

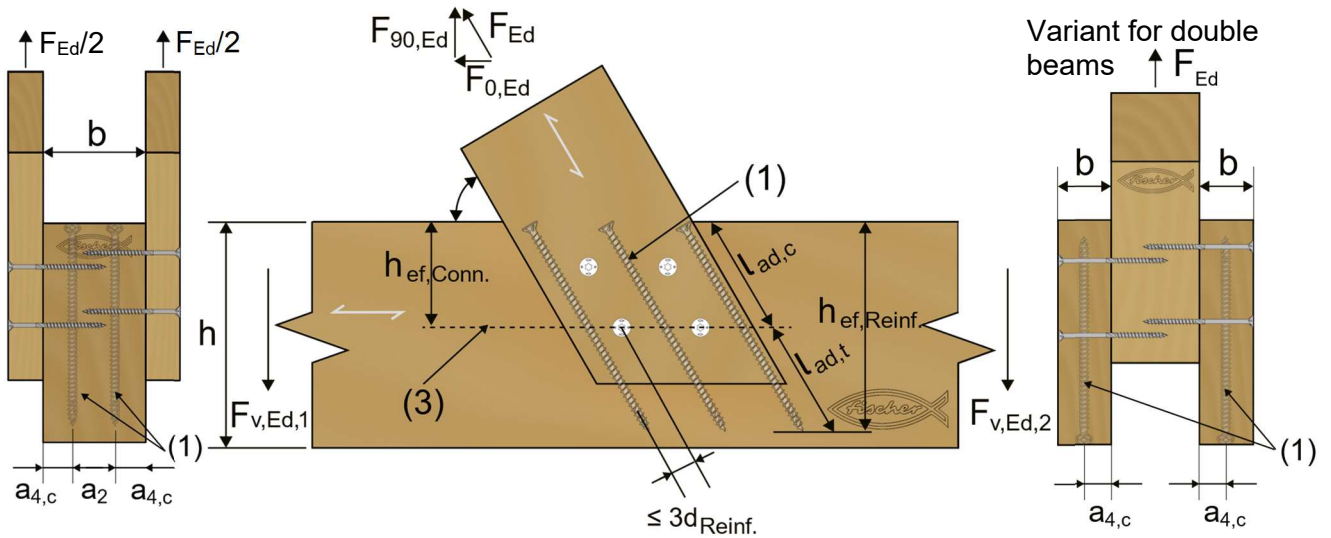

Figure K1.1: Joint with a tensile force component – reinforcement with internal screws (figures not to scale)

Where
(1) Screw reinforcement
(3) Possible crack line

The reinforcement of connections in ST, PL and LVL-P with a tensile force component perpendicular to the grain (see Figure K1.1) may be designed for a tensile force $F_{t,90,Ed}$ according to the equation (64).

$$F_{t,90,Ed} = \left(1 - 3 \cdot \alpha^2 + 2 \cdot \alpha^3\right) \cdot F_{90,Ed} \tag{64}$$

Where
α Ratio $h_{ef,Conn.}$ / h, see Figure
$h_{ef,Conn.}$ Effective height of the connection, see Figure K1.1 [mm]
h Height of the member [mm]
$F_{90,Ed}$ Design force perpendicular to the grain to be transferred by the connection [kN, N]

Where the effective depth of the reinforcement is

$$h_{ef,Reinf.} = \left(l_{ad,c} + l_{ad,t}\right) \cdot \sin\alpha \tag{65}$$

is smaller than 0,7·h, measured from the loaded edge of the beam, the characteristic splitting according to EN 1995-1-1 capacity of one connection should be satisfied at the tip respectively edge of the reinforcement facing the unloaded edge of the beam, see Figure K1.1.
The tensile force $F_{t,90,Ed}$ according to equation (64) is carried only by one row of the screw reinforcement at a distance parallel to the grain, $a_{3,c}$, from the edge of the connection.

Fixations of on-roof insulation system

General rules
»fischer PowerFull II« screws with an outer diameter 6,0 to 10,0 mm may be used for the fixing of heat insulation on the top of rafters.

The thickness of the insulation shall not exceed 400 mm. The rafter insulation must be placed on the top of ST, PL, CL or LVL or other materials with an ETA and be fixed by battens arranged parallel to the rafters or by wood-based panels on the top of the insulation layer. The insulation of vertical facades is also covered by the rules given here.

Screws must be screwed in the rafter through the battens or panels and the insulation without predrilling in one sequence. The angle a between the screw axis and the grain direction of the rafter should be between 30° and 90°.

The minimum thickness t and the minimum width b of the solid timber battens is given in Table L1.1.

Table L1.1: Minimum dimensions of the battens depend on the screw diameter

d [mm]	b_{min} [mm]	t_{min} [mm]
≤ 8,0	50	30
10,0	60	40

The insulation must comply with an European Technical Assessment.

Friction forces shall not be considered for the design of the characteristic axial capacity of the screws.

The anchorage of wind suction forces as well as the bending stresses of the battens or the boards, respectively, shall be considered in design. Additional screws perpendicular to the grain of the rafter (angle α=90°) may arranged if necessary.

The maximum screw spacing is e_s=1,75 m.

Alternative to the battens, panels with a minimum thickness of 20 mm from plywood (PLY) according to EN 636, particleboard (RPB) according to EN 312, oriented strand board OSB/3 and OSB/4 according to EN 300 or ETA and solid wood panels (SWP-c) according to EN 13353 may be used.

Fixations on roof insulation system

Mechanical Model

The system of the rafter, heat insulation on the top of rafter and battens parallel to the rafter may be considered as a beam on elastic foundation. The batten represents the beam, and the heat insulation material on top of the rafter the elastic foundation. The minimum compression stress of the heat insulation material at 10 % deformation, measured according to EN 826 shall be $\sigma_{10\%}$=0,05 N/mm². The batten is loaded perpendicular to the axis by point loads F_b. Further point loads Fs are from the shear load of the roof due to dead and snow load, which are transferred from the screw heads into the battens.

For the design of the battens and the thermal insulation see Annex L6 and L7.

The design of the screws is given with Annex L8 to L11.

The characteristic compressive capacity depending on the free screw length between the counter batten and the rafter should be considered in accordance to Table L2.1

Table L2.1: Buckling capacity of screws with free span length

Free screw length [mm]	Nominal diameter *d* [mm]			
	6,0	8,0	10,0	12,0
≤ 120	2,32	4,28	6,76	18,80
140	1,75	3,27	5,21	14,90
160	1,38	2,57	4,12	12,00
180	1,10	2,08	3,33	9,85
200	0,91	1,71	2,75	8,20
220	0,76	1,43	2,31	6,93
240	0,64	1,21	1,96	5,92
260	0,55	1,04	1,69	5,12
280	0,48	0,91	1,47	4,48
300	0,42	0,79	1,29	3,94
320	0,37	0,70	1,14	3,49
340	0,33	0,62	1,01	3,12
360	0,29	0,56	0,91	2,80
380	0,26	0,50	0,82	2,52
400	0,24	0,46	0,74	2,29
420	0,22	0,42	0,68	2,09

Fixations on roof insulation system for compressive strength insulations

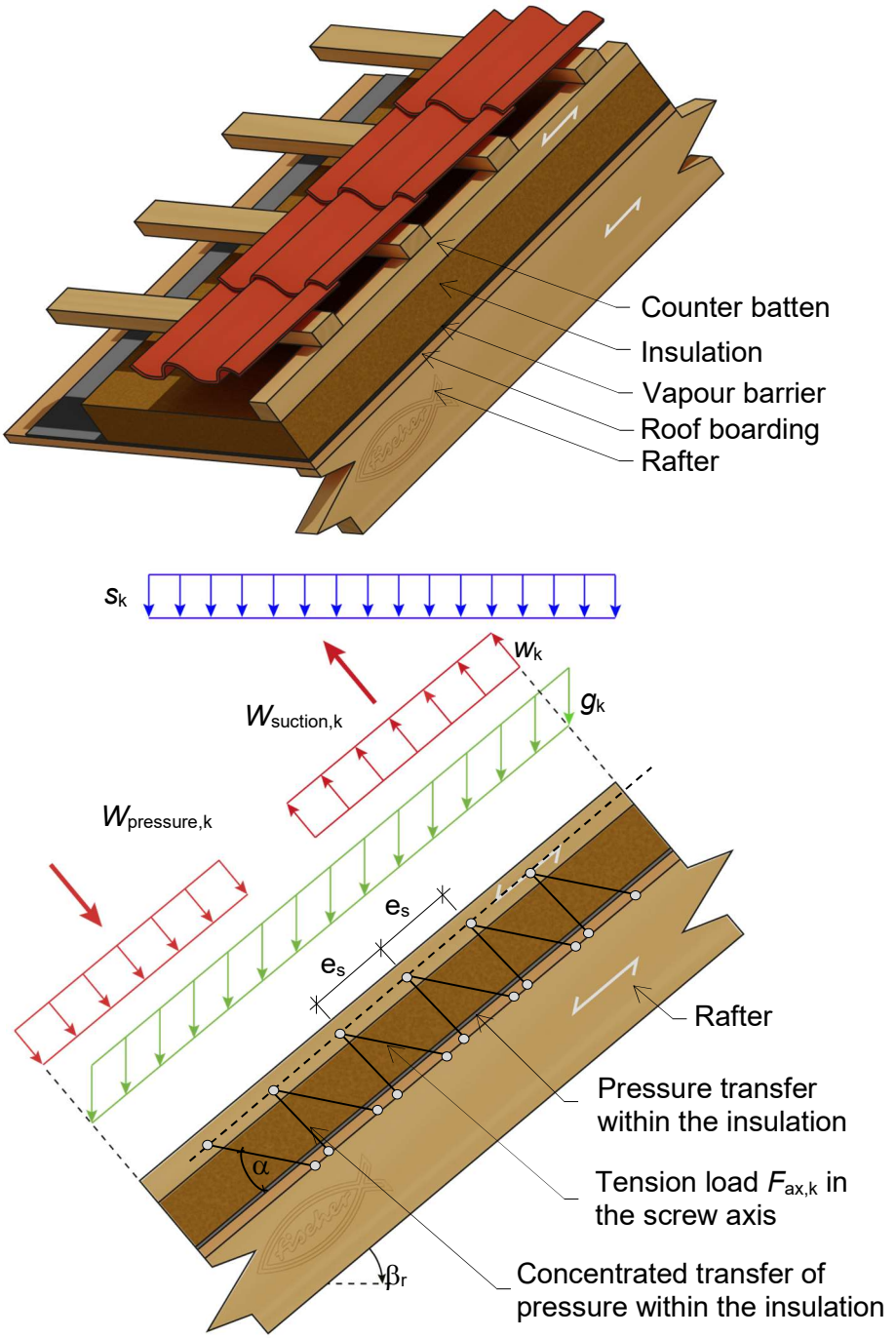

Figure L3.1: Counter batten on rafters with insulation (figures not to scale)

Where

β_r	Roof inclination	α	Angle between the screw axis and the grain-direction of the rafter
e_s	Spacing of screws	l_{ef}	Point side penetration length of the threaded part in the rafter

Point loads F_{Ed} perpendicular to the battens for compressive strength insulations

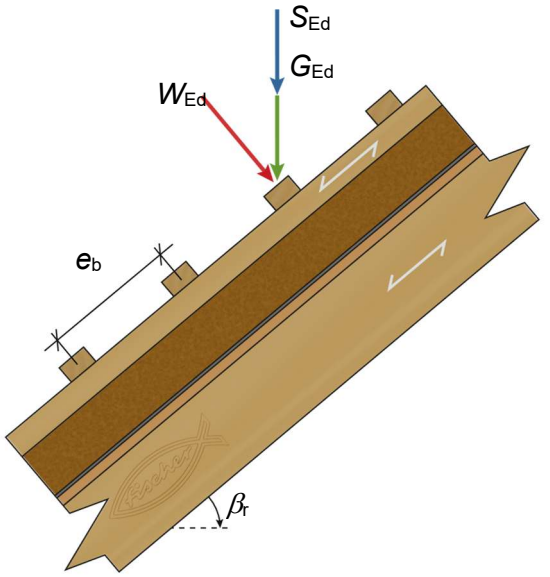

$$
\begin{aligned}
G_{Ed} &= \gamma_G \cdot g_k \cdot e_b \cdot e_r \\
S_{Ed} &= \gamma_Q \cdot s_k' \cdot e_b \cdot e_r \cdot \cos\beta_r \\
W_{Ed} &= \gamma_Q \cdot w_{pressure,k} \cdot e_b \cdot e_r \\
F_{Ed} &= W_{Ed} + (G_{Ed} + S_{Ed}) \cdot \cos\beta_r
\end{aligned}
\tag{66}
$$

Figure L4.1: Counter batten on rafters with insulation – Calculation model action loads (figure not to scale)

Where

F_{Ed}	Point load perpendicular to the battens [N]
G_{Ed}	Point load by dead weight [N]
S_{Ed}	Point load by snow load [N]
W_{Ed}	Point load by wind pressure [N]
e_b	Distance of the battens [mm]
e_r	Distance of the rafters [mm]
g_k	Characteristic dead load per m² roof area [N/m²]
s_k'	Characteristic snow load per m² roof area [N/m²]
$w_{pressure,k}$	Characteristic wind pressure per m² roof area [N/m²]
β_r	Roof inclination [°]
γ_G	Partial factor for permanent action acc. to EN 1990
γ_Q	Partial factor for variable action acc. to EN 1990

Point loads F_{Ed} perpendicular to the battens by the screws

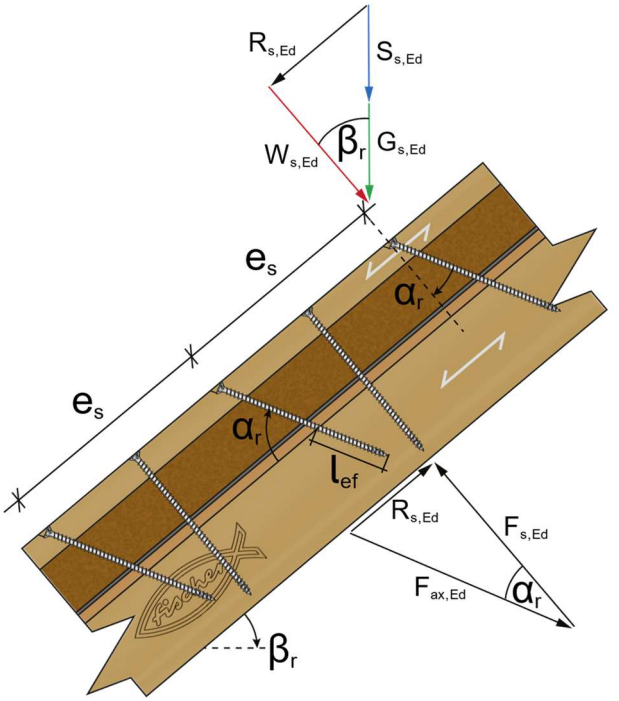

Figure L5.1: Counter batten on rafters with insulation – Design loads (figure not to scale)

$$
\begin{aligned}
G_{s,Ed} &= \gamma_G \cdot g_k \cdot e_s \cdot e_r \\
S_{s,Ed} &= \gamma_Q \cdot s_k' \cdot e_s \cdot e_r \cdot \cos\beta_r \\
R_{s,Ed} &= \left(G_{s,Ed} + S_{s,Ed}\right) \cdot \sin\beta_r \\
F_{s,Ed} &= R_{s,Ed} \big/ \tan\alpha_r
\end{aligned}
\tag{67}
$$

Where

$F_{ax,Ed}$	Axial load of the screws [N]
$F_{s,Ed}$	Point loads perpendicular to the battens by screws [N]
$G_{s,Ed}$	Point load by dead weight [N]
$R_{s,Ed}$	Shear load due to dead weight and snow load [N]
$S_{s,Ed}$	Point load by snow load [N]
$W_{S,Ed}$	Point load by wind pressure [N]
e_s	Distance of the screws [mm]
e_r	Distance of the rafters [mm]
g_k	Characteristic dead load on the roof [N/m²]
s_k'	Characteristic snow load on the roof [N/m²]
α_r	Inclination of the screw axis (see Figure L3.1) [°]
β_r	Roof inclination [°]
γ_G	Partial factor for permanent action acc. to EN 1990 [-]
γ_Q	Partial factor for variable action acc. to EN 1990 [-]

The bending stresses of the battens are calculated with

$$M_{Ed} = \frac{\left(F_{Ed} + F_{s,Ed}\right) \cdot l_{char}}{4} \tag{68}$$

Where

F_{Ed} Point loads perpendicular to the battens [N]
$F_{s,Ed}$ Point loads perpendicular to the battens in the area of the screw heads [N]
M_{Ed} Design bending moment of the batten [Nmm]
l_{char} Characteristic length of the batten [mm]

with $l_{char} = \sqrt[4]{\frac{4 \cdot EI}{w_{ef} \cdot K}}$, where

EI Bending stiffness of the batten [Nmm²]
w_{ef} Effective width of the thermal insulation [mm]
with $w_{ef} = w + t_{ti} / 2$, where
w Minimum width of the batten or rafter [mm]
t_{ti} Thickness of the thermal insulation [mm]
K Bedding modulus [N/mm³]
The coefficient K may be calculated from the modulus of elasticity E_{ti} and the thickness t_{ti} of the thermal insulation if the effective width w_{ef} of the thermal insulation under compression is known. Due to the load extension in the insulation the effective width w_{ef} is greater than the width of the batten or rafter, respectively. For further calculations, the effective width w_{ef} of the thermal insulation may be assessed with $K = \frac{E_{ti}}{t_{ti}}$, where
E_{ti} Modulus of elasticity of the thermal insulation [N/mm²]
t_{ti} Thickness of the thermal insulation [mm]

The following conditions shall be satisfied:

$$\frac{\sigma_{m,Ed}}{f_{m,d}} \leq 1 \tag{69}$$

Where

$\sigma_{m,Ed}$ Design value of the bending stress of the batten [N/mm²]
$f_{m,d}$ Design value of the bending strength [N/mm²]

$$\frac{\tau_{Ed}}{f_{v,d}} = \frac{3 \cdot V_{Ed}}{2 \cdot A_{ef} \cdot f_{v,d}} \leq 1 \tag{70}$$

Where

$f_{v,d}$ Design value of the shear strength of the batten [N/mm²]
A_{ef} Net cross section of the batten [mm²]
V_{Ed} Design shear load onto the batten [N]

with $V_{Ed} = \frac{F_{Ed} + F_{s,Ed}}{2}$

τ_{Ed} Design value of the shear stress of the batten [N/mm²]

If the compressive stresses are transferred over the thermal insulation and not the screws (e.g. partial threaded screws like »fischer PowerFast II« screws are used to transfer only wind suction loads) the following equation has to be considered

$$\sigma_{c,Ed} = \frac{1,5 \cdot F_{Ed} + F_{s,Ed}}{2 \cdot l_{char} \cdot w_{ef}} \tag{71}$$

Where

F_{Ed} Point loads perpendicular to the battens [N]

$F_{s,Ed}$ Point loads perpendicular to the battens in the area of the screw heads [N]

l_{char} Characteristic length of the batten [mm]

with $l_{char} = \sqrt[4]{\frac{4 \cdot EI}{w_{ef} \cdot K}}$, where

EI Bending stiffness of the batten [Nmm²]

w_{ef} Effective width of the thermal insulation [mm]

with $w_{ef} = w + t_{ti} / 2$,

Where

w Minimum width of the batten or rafter [mm]

t_{ti} Thickness of the thermal insulation [mm]

K Bedding modulus [N/mm³]

The coefficient K may be calculated from the modulus of elasticity E_{ti} and the thickness t_{ti} of the thermal insulation if the effective width w_{ef} of the thermal insulation under compression is known. Due to the load extension in the insulation the effective width w_{ef} is greater than the width of the batten or rafter, respectively. For further calculations, the effective width w_{ef} of the thermal insulation may be assessed with $K = \frac{E_{ti}}{t_{ti}}$, where

E_{ti} Modulus of elasticity of the thermal insulation [N/mm²]

t_{ti} Thickness of the thermal insulation [mm]

$\sigma_{c,Ed}$ Design value of the compression stresses of the thermal insulation

Note: The design value of the compressive stress shall not be greater than 110 % of the compressive stress at 10 % deformation calculated according to EN 826.

Design of PowerFull II screws for the structural use in timber constructions

The screws are loaded predominantly axially. The axial tension force in the screw may be calculated from the shear loads of the roof

$$F_{ax,Ed} = \frac{R_{s,Ed}}{\cos\alpha_r} \leq F_{ax,\alpha,Rd} \tag{72}$$

Where

$F_{ax,Ed}$	Design value of the axial tension forces onto the screw [N]
$F_{ax,\alpha,Rd}$	Design value of the withdrawal capacity of the screw [N]
$R_{s,Ed}$	Shear loads onto the screw [N]
α_r	Angle inclined screw (see Figure L3.1) [°]

In order to limit the deformation of the screw head for heat insulation thicknesses over 200 mm or with compressive strength below 0,12 N/mm², respectively, the axial withdrawal capacity of the screws shall be reduced by the factors k_1 and k_2.

The design axial capacity of fischer PowerFull II screws for rafter or façade installation should be calculated with equation (73).

$$F_{ax,\alpha,Rd} = \min\left\{ k_{ax} \cdot f_{ax,d} \cdot d \cdot l_{ef,r} \cdot k_1 \cdot k_2 \cdot \left(\frac{\rho_{k,r}}{350}\right)^{0,8} ;\ \max\left\{ \begin{matrix} f_{head,d} \cdot d_h^{\,2} \\ k_{ax} \cdot f_{ax,d} \cdot d \cdot l_{ef,b} \end{matrix} \right\} \cdot \left(\frac{\rho_{k,b}}{350}\right)^{0,8} ; f_{tens,d} \right\} \tag{73}$$

Where

$F_{ax,\alpha,Rd}$	Design value of the withdrawal capacity of the screw [N]
d	Diameter of the screw [mm]
d_h	Head diameter of the screw [mm]
$f_{ax,d}$	Design value of the withdrawal parameter of the threaded part of the screw [N/mm²]
$f_{head,d}$	Design value of the head pull-through capacity of the screw [N/mm²]
$f_{tens,d}$	Design value of the tensile capacity of the screw [N]
k_{ax}	Coefficient according to equation (18)
k_1	min {1; 200 / t_{ti}} [-]
k_2	min {1; $\sigma_{10\%,Ed}$ / 0,12} [-], where
	$\sigma_{10\%,Ed}$ Compressive stress of the heat insulation at 10 % deformation [N/mm²]
	t_{ti} Thickness of the thermal insulation [mm]
$l_{ef,r}$	Point side penetration length of the threaded part in the rafter with $l_{ef} \geq 40$ mm
$l_{ef,b}$	Penetration length of the threaded part in the batten
α	Angle between grain and screw axis ($\alpha \geq 30°$) [°]
ρ_k	Characteristic density of the timber element [kg/m³]

Note: If the factors k_1 and k_2 are considered in the equation for $F_{ax,Rd}$, the deflection of the battens is not be taken into account. Alternatively to the battens, panels with a minimum thickness of 20 mm from plywood according to EN 636 or an ETA or national provisions that apply at the installation site, particle board according to EN 312 or an ETA or national provisions that apply at the installation site, oriented strand board according to EN 300 or an ETA or national provisions that apply at the installation site and solid wood panels according to EN 13353 or an ETA or national provisions that apply at the installation site or Cross- laminated Timber according to an ETA may be used.

Thermal insulation material on rafters with parallel screws perpendicular to the roof plane

Alternative to the battens, panels with a minimum thickness of 20 mm from plywood according to EN 636, particleboard according to EN 312, oriented strand board OSB/3 and OSB/4 according to EN 300 or European Technical Assessment and solid wood panels according to EN 13353 may be used.
The insulation must have a minimum compressive strength of $\sigma_{10\%}$=0,05 N/mm² at 10 % deformation according to EN 826.
The battens or wood-based panels, respectively, must have sufficient strength and stiffness. The maximum design value of the compressive stress between the battens or boards, respectively, and the insulation shall not exceed 1,1 $\sigma_{10\%}$.

Characteristic load-carrying capacity of a screw loaded in shear may be calculated with

$$F_{v,Rk} = \min \begin{cases} f_{h,b,k} \cdot d \cdot t_b \\ f_{h,r,k} \cdot d \cdot t_r \\ \dfrac{f_{h,b,k} \cdot d \cdot \beta}{1+\beta} \cdot \left(\sqrt{4t_{ti}^2 + (2+\frac{1}{\beta})t_b^2 + (2+\beta)t_r^2 + 4t_{ti}\left(t_b + t_r\right) + 2t_b t_r} - 2t_{ti} - t_b - t_r \right) + \dfrac{F_{ax,Rk}}{4} \\ 1{,}05 \cdot \dfrac{f_{h,b,k} \cdot d \cdot \beta}{\frac{1}{2}+\beta} \left(\sqrt{t_{ti}^2 + t_{ti} t_b + \dfrac{t_b^2}{2}\left(1+\dfrac{1}{\beta}\right) + \dfrac{M_{y,k}}{f_{h,b,k} \cdot d}\left(1+\dfrac{2}{\beta}\right)} - t_{ti} - \dfrac{t_b}{2} \right) + \dfrac{F_{ax,Rk}}{4} \\ 1{,}05 \cdot \dfrac{f_{h,b,k} \cdot d \cdot \beta}{\frac{1}{2}+\beta} \left(\sqrt{t_{ti}^2 + t_{ti} t_r + \dfrac{t_r^2}{2}\left(1+\beta\right) + \dfrac{M_{y,k}}{f_{h,b,k} \cdot d}\left(2+\dfrac{1}{\beta}\right)} - t_{ti} - \dfrac{t_r}{2} \right) + \dfrac{F_{ax,Rk}}{4} \\ 1{,}15 \cdot \dfrac{f_{h,b,k} \cdot d}{1+\beta} \left(\sqrt{\beta^2 t_{ti}^2 + 4 \cdot \beta\left(\beta+1\right) \cdot \dfrac{M_{y,k}}{f_{h,b,k} \cdot d}} - \beta \cdot t_{ti} \right) + \dfrac{F_{ax,Rk}}{4} \end{cases} \quad (74)$$

Where

$F_{v,RK}$	Characteristic load-carrying capacity of a screw loaded in shear [N]
$M_{y,k}$	Characteristic yield moment of the screw [Nmm]
$F_{ax,Rk}$	The minimum characteristic load-carrying capacity of the axially loaded screws acc. to Annex D [N]
$f_{h,b,k}$	Characteristic embedment strength of the batten [N/mm²]
$f_{h,r,k}$	Characteristic embedment strength of the rafter [N/mm²]
d	Outer thread diameter [mm]
t_b	Batten thickness [mm]
t_r	The lower value of rafter thickness or screw penetration length [mm]
t_{ti}	Thickness of the thermal insulation [mm]
β	Coefficient of the embedment strength of the rafter to the batten [-] with $\beta = f_{h,r,k} / f_{h,b,k}$

Thermal insulation material on rafters with alternatively inclined screws

Mechanical Model

Depending on the screw spacing and the arrangement of tensile and compressive screws with different inclinations the battens are loaded by significant bending moments. The bending moments are derived on the following assumptions:

- The tensile and compressive loads in the screws are assessed based on equilibrium conditions from the actions parallel and perpendicular to the roof plane. These actions are constant line loads.
- The screws act as hinged columns supported 10 mm within the batten or rafter. The effective column length consequently equals the length of the screw between batten and rafter plus 20 mm.
- The batten is considered as a continuous beam with a constant span l=A+B. The compressive screws constitute the supports of the continuous beam while the tensile screws transfer concentrated loads perpendicular to the batten axis.
- The screws are predominantly loaded in tension or compression. The screw's normal forces are assessed based on the loads parallel and perpendicular to the roof plane.

Compressive screws

$$F_{c,Ed} = (A+B)\cdot\left(-\frac{q_{II,d}}{\cos\alpha_1 + \sin\alpha_1 / \tan\alpha_2} - \frac{q_{\perp,d}\cdot\sin(90-\alpha_2)}{\sin(\alpha_1+\alpha_2)}\right) \tag{75}$$

Tensile screws

$$F_{c,Ed} = (A+B)\cdot\left(\frac{q_{II,d}}{\cos\alpha_2 + \sin\alpha_2 / \tan\alpha_1} - \frac{q_{\perp,d}\cdot\sin(90-\alpha_1)}{\sin(\alpha_1+\alpha_2)}\right) \tag{76}$$

The bending moments in the batten follow from the constant line loads and the load components perpendicular to the batten from the tensile screw. The span of the continuous beam is equal to (A+B). the load component perpendicular to the batten from the tensile screw is:

$$F_{ZS,Ed} = (A+B)\cdot\left(\frac{q_{II,d}}{1/\tan\alpha_1 + 1/\tan\alpha_2} - \frac{q_{\perp,d}\cdot\sin(90-\alpha_1)\cdot\sin\alpha_2}{\sin(\alpha_1+\alpha_2)}\right) \tag{77}$$

Note: A positive value for $F_{ZS,Ed}$ means a load towards the rafter, a negative value a load away from the rafter.

Thermal insulation material on rafters with alternatively inclined screws

Mechanical Model

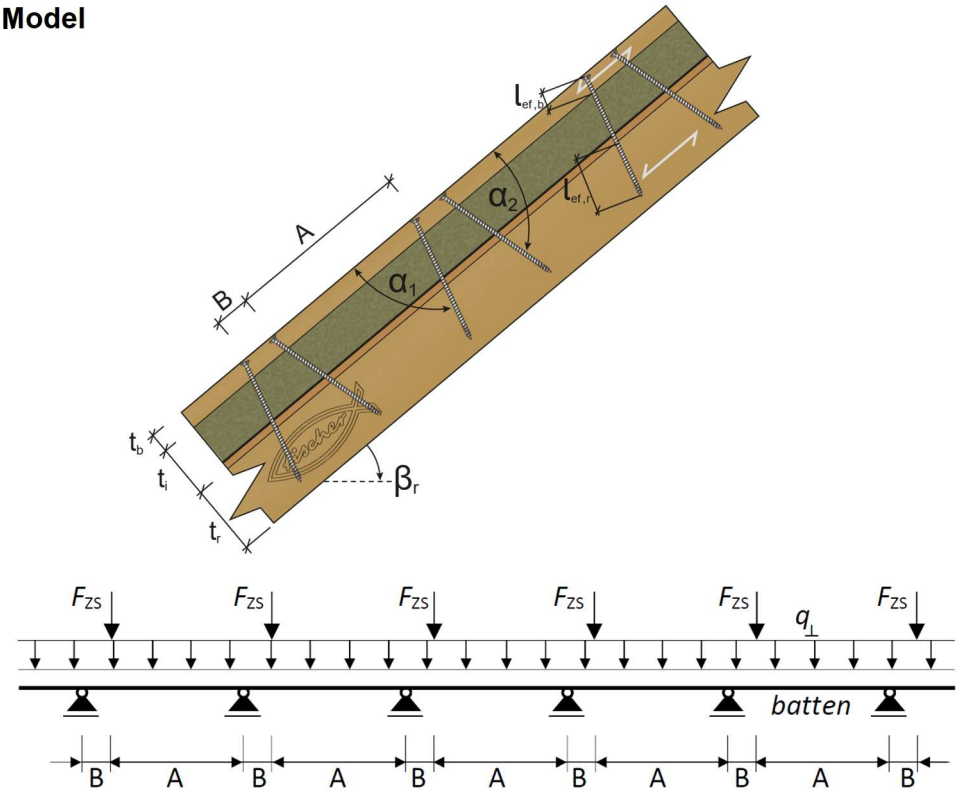

Figure L11.1: Counter batten on rafters with alternatively inclined screws and mechanical model (figure not to scale)

Compressive screws

$$F_{c,Ed} = (A+B)\cdot\left(-\frac{q_{II,d}}{\cos\alpha_1 + \sin\alpha_1 / \tan\alpha_2} - \frac{q_{\perp,d}\cdot\sin(90-\alpha_2)}{\sin(\alpha_1+\alpha_2)}\right) \tag{78}$$

Tensile screws

$$F_{c,Ed} = (A+B)\cdot\left(\frac{q_{II,d}}{\cos\alpha_2 + \sin\alpha_2 / \tan\alpha_1} - \frac{q_{\perp,d}\cdot\sin(90-\alpha_1)}{\sin(\alpha_1+\alpha_2)}\right) \tag{79}$$

Concentrated load

$$F_{ZS,Ed} = (A+B)\cdot\left(\frac{q_{II,d}}{1/\tan\alpha_1 + 1/\tan\alpha_2} - \frac{q_{\perp,d}\cdot\sin(90-\alpha_1)\cdot\sin\alpha_2}{\sin(\alpha_1+\alpha_2)}\right) \tag{80}$$

Note: A positive value for $F_{ZS,Ed}$ means a load towards the rafter, a negative value a load away from the rafter.

Thermal insulation material on rafters with alternatively inclined screws

Load carrying-capacities of the screws

The design withdrawal/tension capacity of fischer PowerFull II screws for rafter or façade installation should be calculated with equation (81).

$$F_{ax,t,\alpha,Rd} = \min\left\{ k_{ax} \cdot f_{ax,d} \cdot d \cdot l_{ef,r} \cdot \left(\frac{\rho_{k,r}}{350}\right)^{0,8} ;\ \max\left\{ \begin{matrix} f_{head,d} \cdot d_h^{\,2} \\ k_{ax} \cdot f_{ax,d} \cdot d \cdot l_{ef,b} \end{matrix} \right\} \cdot \left(\frac{\rho_{k,b}}{350}\right)^{0,8} ; f_{tens,d} \right\} \quad (81)$$

The design compression/buckling capacity of fischer PowerFull II screws for rafter or façade installation should be calculated with equation (82).

$$F_{ax,c,\alpha,Rd} = \min\left\{ k_{ax} \cdot f_{ax,d} \cdot d \cdot l_{ef,r} \cdot \left(\frac{\rho_{k,r}}{350}\right)^{0,8} ;\ k_{ax} \cdot f_{ax,d} \cdot d \cdot l_{ef,b} \cdot \left(\frac{\rho_{k,b}}{350}\right)^{0,8} ; F_{b,Rd} \right\} \quad (82)$$

Where

d	Diameter of the screw [mm]
d_h	Head diameter of the screw [mm]
$f_{ax,d}$	Design value of the withdrawal parameter of the threaded part of the screw [N/mm²]
$f_{head,d}$	Design value of the head pull-through capacity of the screw [N/mm²]
$f_{tens,d}$	Design value of the tensile capacity of the screw [N]
k_{ax}	Coefficient according to equation (18)
$l_{ef,r}$	Point side penetration length of the threaded part in the rafter with $l_{ef} \geq 40$ mm
$l_{ef,b}$	Penetration length of the threaded part in the batten
ρ_k	Characteristic density of the timber element [kg/m³]
$F_{ax,\alpha,Rd}$	Design value of the withdrawal capacity of the screw [N]
$F_{c,Ed}$	Design compressive force of the screw [N]
$F_{t,Ed}$	Design tensile force of the screw [N]
$F_{ZS,Ed}$	Concentrated load due to the tensile screw [N]
$F_{b,Rd}$	Buckling strength of the screw with free span length (see also Annex D14 and L2)
$q_{II,d}$	Design loads parallel to the batten [N/m]
$q_{\perp,d}$	Design loads perpendicular to the batten [N/m]
α_1	Batten thickness [mm]
α_2	The lower value of rafter thickness or screw penetration length [mm]

Design of PowerFull II screws for the structural use in timber constructions

Inclined screws with an angle of 45° for the use in single shear plane timber-to-steel

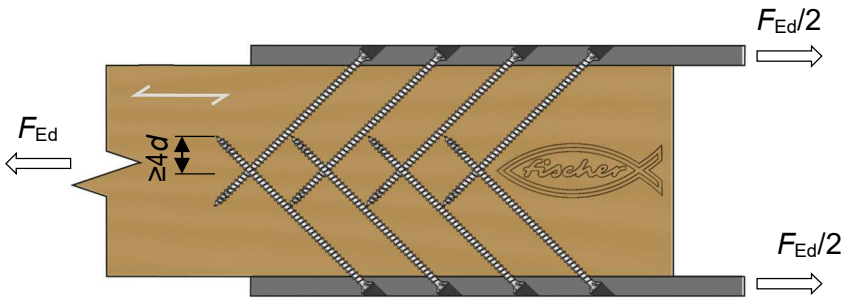

Figure M1.1: Shear connection with inclined screws steel-to-timber connection (figure not to scale)

$$F_{v,Rk} = F_{ax,\alpha,Rk} \cdot \left(\mu \cdot \sin\alpha + \cos\alpha\right) + \sqrt{2 \cdot (1+\zeta)} \cdot \sqrt{M_{y,Rk} \cdot f_{h,\alpha,k} \cdot (0,7 \cdot d) \cdot \sin^2\alpha} \cdot (1 - \mu \cdot \cot\alpha) \quad (83)$$

With

Where

$F_{v,Rk}$	Characteristic load-carrying capacity of a screw each shear plane [N]
$F_{ax,\alpha,Rk}$	Characteristic withdrawal capacity of the screw [N], see Annex C8
α	Angle between screw axis and grain-direction [°], α = 45°
ζ	Factor to consider partial restraint of the screw head in the steel plate [0≤ ζ ≤1] ζ=0 For thin steel plates t < 1,5·d ζ=1 For thick steel plates t ≥ 1,5·d *and tolerances of the diameter less than* 0,1·d In between a linear interpolation is allowed
$M_{y,Rk}$	Yield moment of the screw see Annex C1 [Nmm],
$f_{h,\alpha',k}$	Characteristic embedment strength of the screw with an angle α' = 45 [°]
μ	Coefficient of friction, if permanent compression forces between the steel/aluminium and timber elements can be ensured For steel and aluminium μ = 0,25

Note: For the use of inclined screws from opposite sides, the screws must overlap in the area of the screw tips to avoid a damage due to tension stress perpendicular to the grain-direction (Recommended value ≥ 4·d)

Inclined screws for the use in single timber-to-timber shear connections

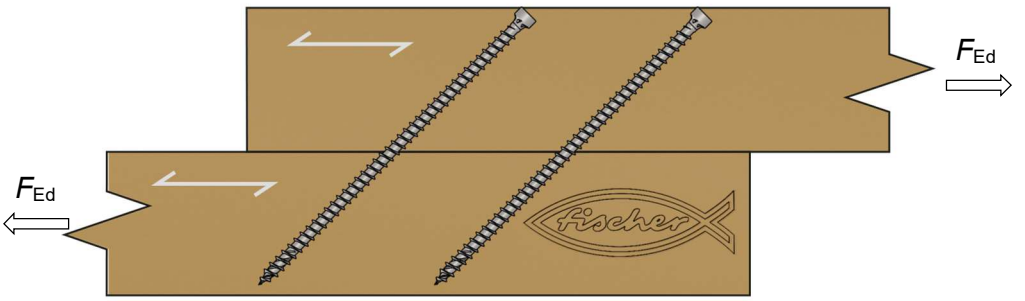

Figure M2.1: Shear connection with inclined screws timber-to-timber connection (figure not to scale)

The load-carrying capacity

$$F_{v,Rk} = \frac{1}{\sqrt{\left(\frac{\cos\alpha}{F_{v,Rk}}\right)^2 + \left(\frac{\sin\alpha}{F_{ax,Rk}}\right)^2}} \tag{84}$$

The slip modulus, see also Annex C18

$$K_{ser} = K_{v,ser} \cdot \cos\alpha \cdot (\cos\alpha - \mu \cdot \sin\alpha) + K_{ax,ser} \cdot \sin\alpha \cdot (\sin\alpha + \mu \cdot \cos\alpha) \tag{85}$$

For cross coupled screws the friction should not be considered, which leads to

$$K_{ser} = K_{v,ser} \cdot \cos^2\alpha + K_{ax,ser} \cdot \sin^2\alpha \tag{86}$$

Considering the deformations in both parts leads to the total slip modulus

$$K_{v,tot,ser} = \frac{1}{\frac{1}{K_{ax,ser,1}} + \frac{1}{K_{ax,ser,2}}} \tag{87}$$

Where

d	Outer thread diameter of the screw [mm]
$F_{v,Rk}$	Characteristic load-carrying capacity of a screw each shear plane [N]
$F_{ax,Rk}$	Withdrawal capacity of the screw [N], see Annex C8
$K_{ax,ser}$	Slip modulus parallel to the screw axis in the serviceability limit state [N/mm]
$K_{v,ser}$	Slip modulus perpendicular to the screw axis in the serviceability limit state [N/mm]
α	Angle between screw axis and grain-direction [°]
μ	Coefficient of friction, if permanent compression forces between the timber elements can be ensured μ = 0,25

Fire Design of PowerFull II screws for the structural use in timber constructions according to EN 1995-1-2

- Connections with side members of timber elements – simplified rules

a) Unprotected connections

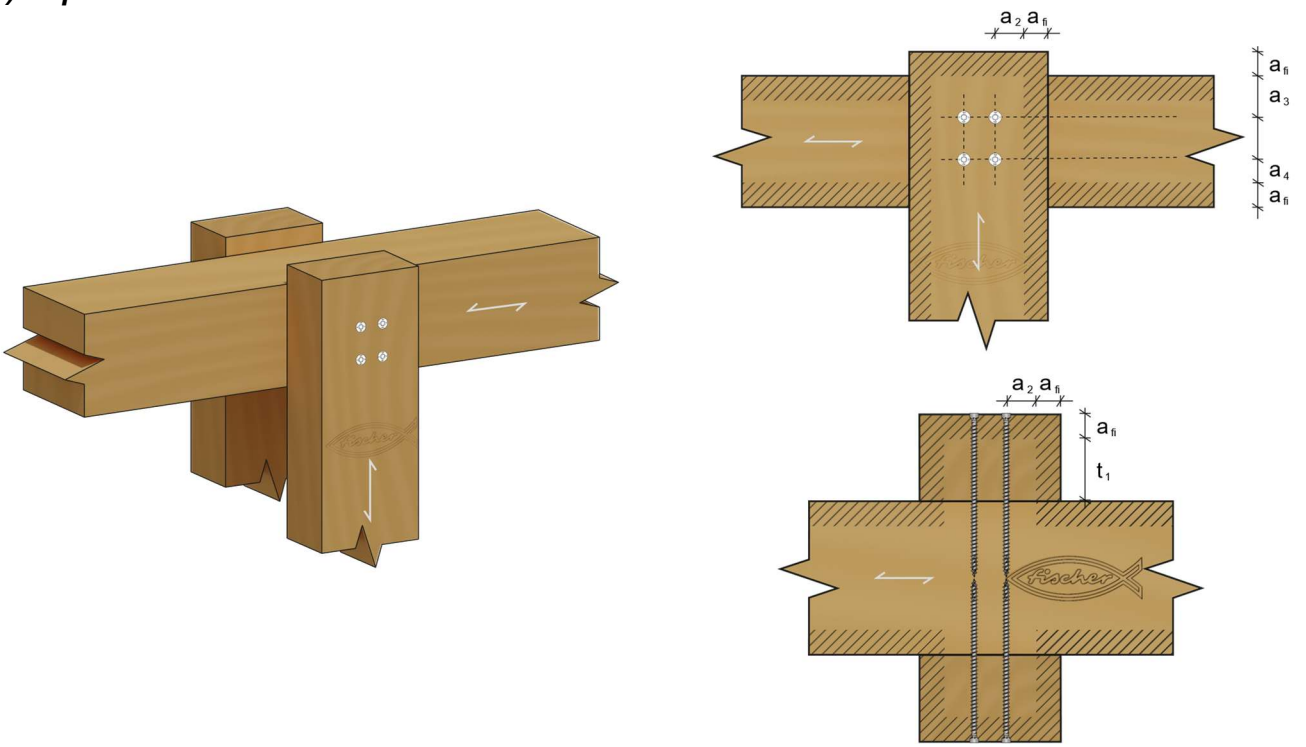

Figure N1.1: Fire design for unprotected screws – laterally loaded (figures not to scale)

The fire resistance of unprotected timber-to-timber joints with screws with $d \geq 3{,}5$ mm where spacing, edge and end distances and side member dimensions comply with minimum requirements given in EN 1995-1-1 have a fire resistance of

$$t_{d,fi} = 15 \text{ min} \tag{88}$$

For connections with non-protruding heads, the fire resistance periods $t_{d,fi}$ can be extended by increasing the following dimensions with a_{fi} to a maximum of 30 minutes.

- The thickness of the side members
- The width of the side members
- The end- and edge distances of the screws

With

$$a_{fi} = 1{,}5 \cdot \beta_n \cdot (t_{req} - t_{d,fi}) \tag{89}$$

Fire Design of PowerFull II screws for the structural use in timber constructions according to EN 1995-1-2

The values for the design notional charring rate β_n under standard fire exposure are given below.

Table N2.1: Notional charring rate

Material	**β_n [mm/min]**
Softwood and beech	
Glued Laminated Timber with a characteristic density of ≥ 290 kg/m³	0,70
Solid Timber with a characteristic density of ≥ 290 kg/m³	0,80
Hardwood	
Solid or Glued Laminated hardwood with a characteristic density of ≥ 290 kg/m³	0,70
Solid or Glued Laminated hardwood with a characteristic density of ≥ 450 kg/m³	0,55
LVL	
LVL with a characteristic density of ≥ 480 kg/m³	0,70

b) Protected connections

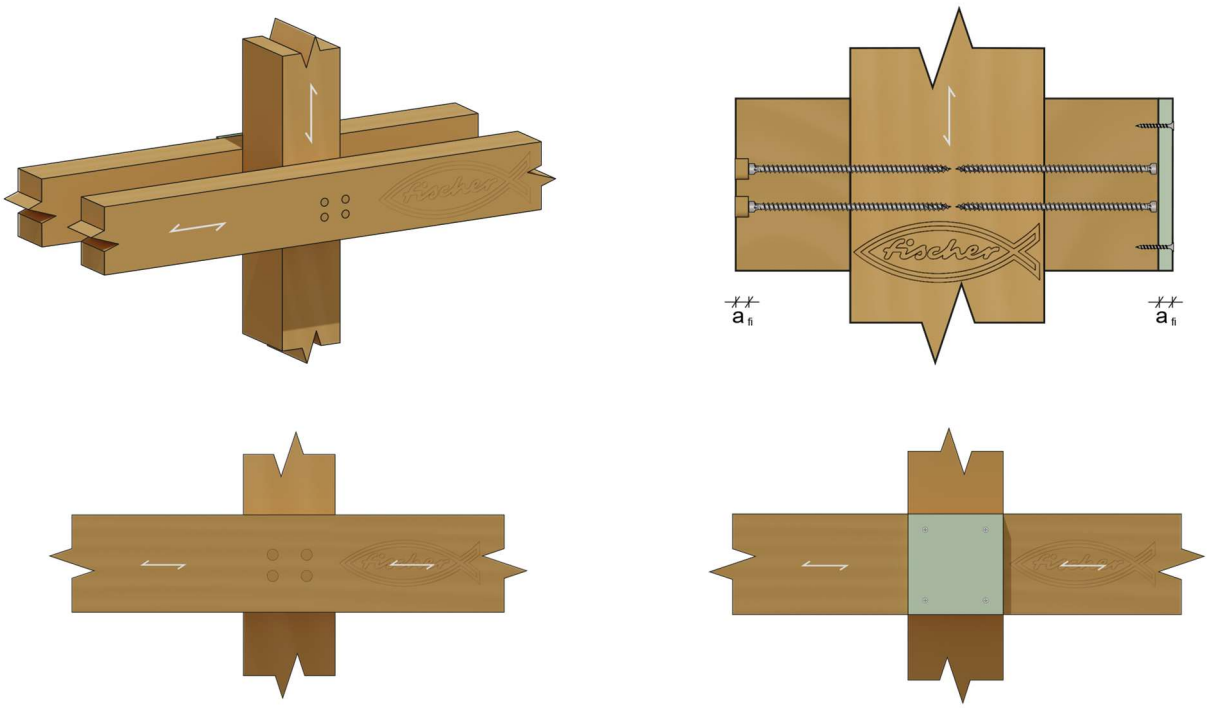

Figure N2.1: Fire design for protected screws – laterally loaded (figures not to scale)

If the construction is protected by the addition of wood panelling, wood-based panels or gypsum plasterboards type *A* or *H* or other fire protection panels with a fire resistance in accordance with an European Technical Assessment, the time until start of charring should satisfy

$$t_{ch} \geq t_{req} - 0{,}5 \cdot t_{d,fi} \quad (90)$$

If the connection is protected by the addition of gypsum plasterboard type *F*, the time until start of charring should satisfy equation (91).

$$t_{ch} \geq t_{req} - 1{,}2 \cdot t_{d,fi} \tag{91}$$

For connections where the screws are protected by glued-in timber plugs, the length of the plugs should be assessed according to

$$a_{fi} = 1{,}5 \cdot \beta_n \cdot (t_{req} - t_{d,fi}) \tag{92}$$

The fixings of the additional protection should prevent its premature failure. Additional protection provided by wood-based panels or gypsum plasterboards should remain in place until charring of the member starts ($t = t_{ch}$). Additional protection provided by gypsum plasterboards type *F* should remain in place during the required fire resistance period ($t = t_{req}$).

The following rules apply for the fixing of additional protections by screws:
- The distance between the screws should be not more than 100 mm along the board edges and not more than 300 mm for fastenings within the area of the boards
- The edge distance of fasteners should be equal or greater than a_{fi}, calculated using expression

$$a_{fi} = 1{,}5 \cdot \beta_n \cdot (t_{req} - t_{d,fi}) \tag{93}$$

The penetration depth of the screws for fixing the additional protection made of wood, wood-based panels or gypsum plasterboards type *A* or *H* should be at least 6·*d*.

For gypsum plasterboards type *F*, the penetration length into unburnt wood (that is beyond the char-line) should be at least 10 mm (see also EN 1995-1-2).

Where

a_{fi}	Extra thickness of member to improve the fire resistance [mm]
t_{req}	Required time of fire resistance [min]
$t_{d,fi}$	Time of the fire resistance of the unprotected connection [min]
β_n	Notional charring rate [mm/min]

Fire Design of PowerFull II screws for the structural use in timber constructions according to EN 1995-1-2

- Simplified rules for axially loaded screws

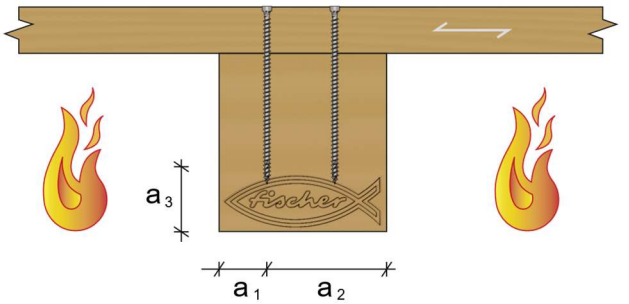

Figure N4.1: Fire design for axially loaded screws (figure not to scale)

For axially loaded screws which are protected from direct fire exposure, the design resistance of the screws should be calculated like below

$$F_{ax,d,t,fi} = \eta \cdot \frac{1,05 \cdot F_{ax,Rk}}{\gamma_{M,fi}} \tag{94}$$

For connections where the distances a_2 and a_3 of the screws satisfy the equations (95), the conversion factor η for the reduction of the axial resistance of the screw in the fire situation should be calculated with equation (96).

$$\begin{aligned} a_2 &\geq a_1 + 40 \\ a_3 &\geq a_1 + 20 \end{aligned} \tag{95}$$

$$\eta = \begin{cases} 0 & \text{for } a_1 \leq 0,6 \cdot t_{d,fi} \\ \dfrac{0,44 \cdot a_1 - 0,264 \cdot t_{d,fi}}{0,2 \cdot t_{d,fi} + 5} & \text{for } 0,6 \cdot t_{d,fi} \leq a_1 \leq 0,8 \cdot t_{d,fi} + 5 \\ \dfrac{0,56 \cdot a_1 - 0,36 \cdot t_{d,fi} + 7,32}{0,2 \cdot t_{d,fi} + 23} & \text{for } 0,8 \cdot t_{d,fi} + 5 \leq a_1 \leq t_{d,fi} + 28 \\ 1,0 & \text{for } a_1 \geq t_{d,fi} + 28 \end{cases} \tag{96}$$

Where

a_1, a_2, a_3	Distances and spacing of the screws [mm]
$t_{d,fi}$	Time of the fire resistance of the unprotected connection [min]
$F_{ax,Rk}$	Characteristic withdrawal strength [N]
$F_{ax,d,t,fi}$	Design value of the withdrawal strength in the fire situation [N]
$\gamma_{M,fi}$	Partial factor for timber in the case of fire, see National regulations (recommended value $\gamma_{M,fire}$=1,0) [-]
η	Conversion factor for the reduction of the load-bearing capacity in the case of fire [-]