DEKLARACJA WŁAŚCIWOŚCI UŻYTKOWYCH

DoP 0173

dla systemu wklejanego fischer FIS EM Plus (Łączniki metalowe do stosowania w betonie) PL

1. Niepowtarzalny kod identyfikacyjny typu wyrobu: **DoP 0173**

2. Zamierzone zastosowanie: **Mocowanie w betonie zarysowanym lub niezarysowanym. Zobacz załącznik, w szczególności aneksy B1- B13**

3. Producent: **fischerwerke GmbH & Co. KG, Otto-Hahn-Straße 15, 79211 Denzlingen, Niemcy**

4. Upoważniony przedstawiciel: **–**

5. System(-y) oceny i weryfikacji stałości właściwości użytkowych: **1**

6. Europejski dokument oceny: **EAD 330499-01-0601**
   Europejska ocena techniczna: **ETA-17/0979; 2019-07-22**
   Jednostka ds. oceny technicznej: **DIBt- Deutsches Institut für Bautechnik**
   Jednostka lub jednostki notyfikowane: **1343 MPA Darmstadt**

7. Deklarowane właściwości użytkowe:

Wytrzymałość mechaniczna i stabilność osadzenia (BWR 1)

Nośność charakterystyczna na wyrywanie (nośności statyczne i quasi-statyczne):	Nośność do uszkodzenia stali:	Aneksy C1- C3	
	Nośność na wyrywanie i zniszczenie stożka betonu:	Aneksy C5- C12	ψ^0_{sus}= NPD
	Nośność do wyrwania stożka betonu:	Aneksy C4	
	Odległość od krawędzi zapobiegająca pękaniu pod obciążeniem:	Aneksy C4	
	Solidność:	Aneksy C4	
	Maksymalny moment dokręcania:	Aneksy B3, B6- B8	
	Minimalne odstępy osiowe i krawędziowe:	Aneksy B3- B8	
Nośność charakterystyczna na ścinanie (nośności statyczne i quasi-statyczne):	Nośność do uszkodzenia stali:	Aneksy C1- C3	
	Nośność do uszkodzenia wyważenia:	Aneksy C4	
	Nośność do zniszczenieakrawędzi betonu:	Aneksy C4	
Nośność charakterystyczna i przemieszczenia w warunkach sejsmicznych dla kategorii C1 i C2:	Nośność na wyrywanie, zmiany, kategoria C1	Aneksy C15- C16, C17	
	Nośność na wyrywanie, zmiany kategoria C2:	Aneksy C15, C16, C18	
	Nośność na ścinanie, zmiany, kategoria C1:	Aneksy C15- C16, C17	
	Nośność na ścinanie, zmiany, kategoria C1:	Aneksy C15, C16, C18	
	Współczynnik szczeliny pierścieniowej	NPD	
Przemieszczenia pod obciążeniem krótko- i długoterminowym:	Przemieszczenia pod obciążeniem krótko- i długoterminowym:	Aneksy C13, C14	

Higiena, zdrowie i środowisko (BWR 3)

Treść, emisja i / lub uwalnianie substancji niebezpiecznych:	NPA

8. Odpowiednia dokumentacja techniczna lub specjalna dokumentacja techniczna: –

Właściwości użytkowe określonego powyżej wyrobu są zgodne z zestawem deklarowanych właściwości użytkowych. Niniejsza deklaracja właściwości użytkowych wydana zostaje zgodnie z rozporządzeniem (UE) nr 305/2011 na wyłączną odpowiedzialność producenta określonego powyżej.

W imieniu producenta podpisał(-a):

ppa. Thilo Pregartner

i.V. P. Schillinger

Thilo Pregartner, Dr.-Ing.

Peter Schillinger, Dipl.-Ing.

Tumlingen, 2019-08-01

Niniejsza Deklaracja Właściwości Użytkowych została przygotowana w różnych językach. W razie wątpliwości w interpretacji, wersja angielska jest zawsze miarodajna.

Załącznik zawiera dobrowolne i uzupełniające informacje w języku angielskim (neutralne językowo), a wykraczające poza wymagania prawne.

Specific Part

1 Technical description of the product

The "fischer injection system FIS EM Plus" is a bonded fastener consisting of a cartridge with injection mortar fischer FIS EM Plus and a steel element according to Annex A5.

The steel element is placed into a drilled hole filled with injection mortar and is anchored via the bond between metal part, injection mortar and concrete.

The product description is given in Annex A.

2 Specification of the intended use in accordance with the applicable European Assessment Document

The performances given in Section 3 are only valid if the anchor is used in compliance with the specifications and conditions given in Annex B.

The verifications and assessment methods on which this European Technical Assessment is based lead to the assumption of a working life of the anchor of at least 50 or 100 years. The indications given on the working life cannot be interpreted as a guarantee given by the producer, but are to be regarded only as a means for choosing the right products in relation to the expected economically reasonable working life of the works.

3 Performance of the product and references to the methods used for its assessment

3.1 Mechanical resistance and stability (BWR 1)

Essential characteristic	Performance
Characteristic resistance for static and quasi-static tension load	See Annex C 1 to C 12
Characteristic resistance for static and quasi-static shear load	See Annex C 1 to C 4
Displacements for static and quasi-static loads	See Annex C 13 to C 14
Characteristic resistance for seismic performance categories C1 and C2	See Annex C 15 to C 18
Durability	See Annex B 2

3.2 Hygiene, health and the environment (BWR 3)

Essential characteristic	Performance
Content, emission and/or release of dangerous substances	No performance assessed

4 Assessment and verification of constancy of performance (AVCP) system applied, with reference to its legal base

In accordance with EAD 330499-01-0601 according to Article 66 Paragraph 3 of Regulation (EU) No 305/2011 the applicable European legal act is: [96/582/EC].

The system to be applied is: 1

Installation conditions part 1

fischer anchor rod

Pre-positioned installation

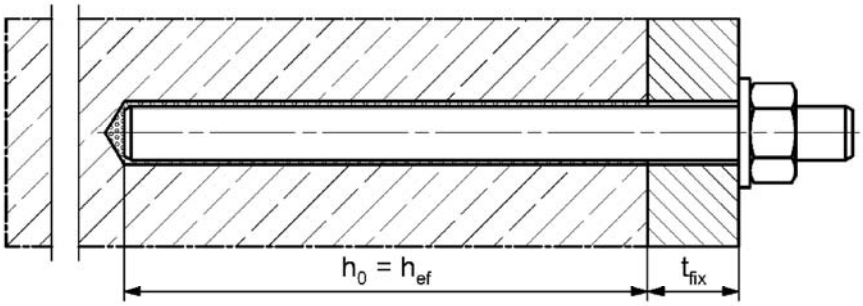

Push through installation (annular gap filled with mortar)

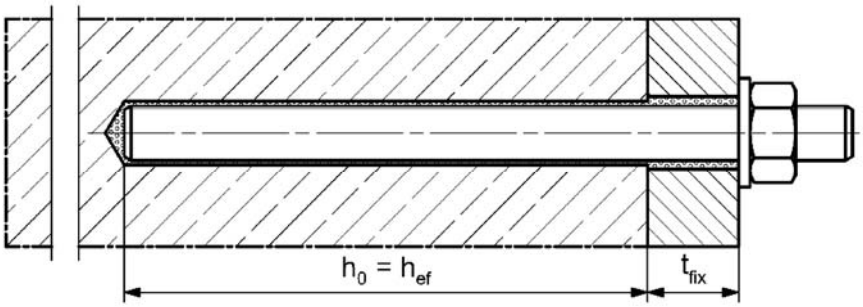

Pre-positioned or push through installation with subsequently injected filling disk
(annular gap filled with mortar)

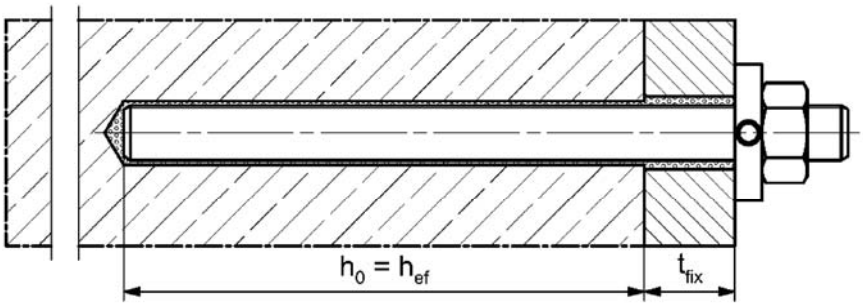

Figures not to scale

h_0 = drill hole depth

h_{ef} = effective embedment depth

t_{fix} = thickness of fixture

fischer injection system FIS EM Plus

Product description
Installation conditions part 1

Annex A 1

Installation conditions part 2

fischer internal threaded anchor RG MI

Pre-positioned installation

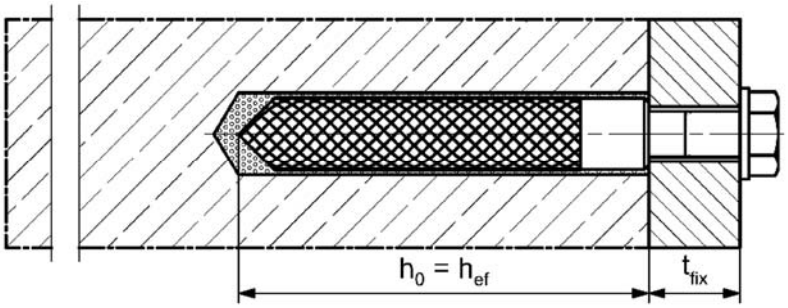

Pre-positioned installation with subsequently injected filling disk (annular gap filled with mortar)

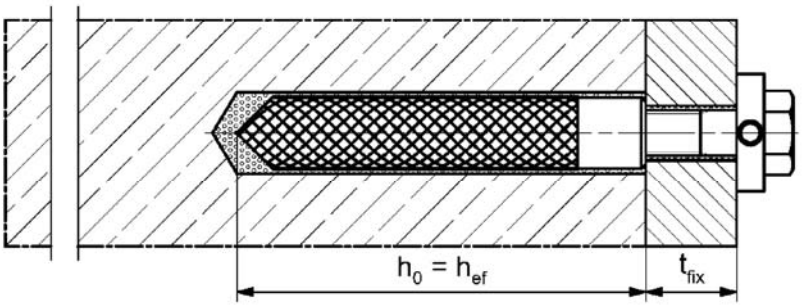

Figures not to scale

h_0 = drill hole depth

h_{ef} = effective embedment depth

t_{fix} = thickness of fixture

fischer injection system FIS EM Plus

Product description
Installation conditions part 2

Annex A 2

Installation conditions part 3

Reinforcing bar

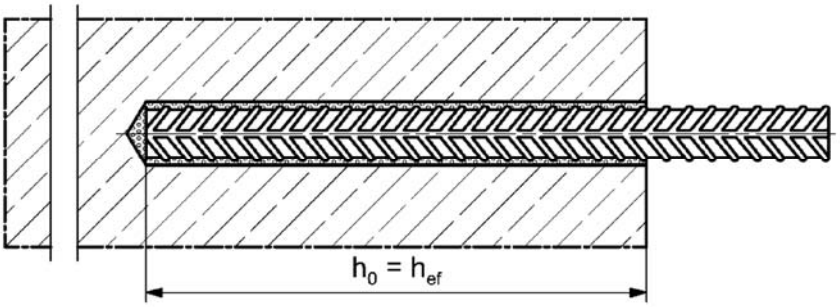

fischer rebar anchor FRA

Pre-positioned installation

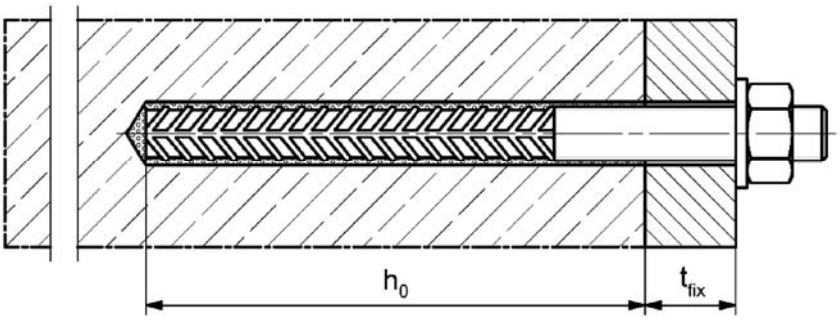

Push through installation (annular gap filled with mortar)

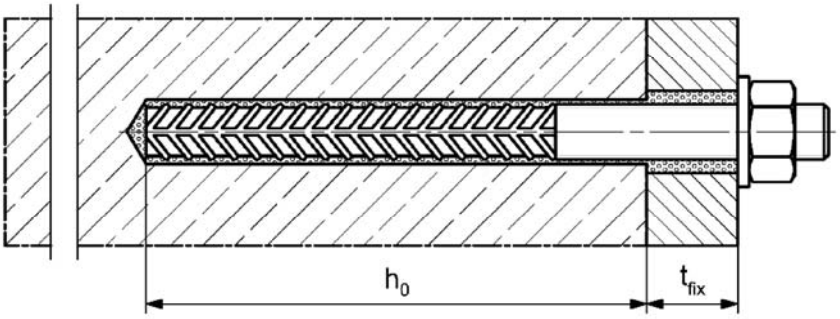

Figures not to scale

h_0 = drill hole depth

h_{ef} = effective embedment depth

t_{fix} = thickness of fixture

fischer injection system FIS EM Plus

Product description
Installation conditions part 3

Annex A 3

Overview system components part 1

Injection cartridge (shuttle cartridge) with sealing cap; Size: 390 ml, 585 ml, 1100 ml, 1500 ml

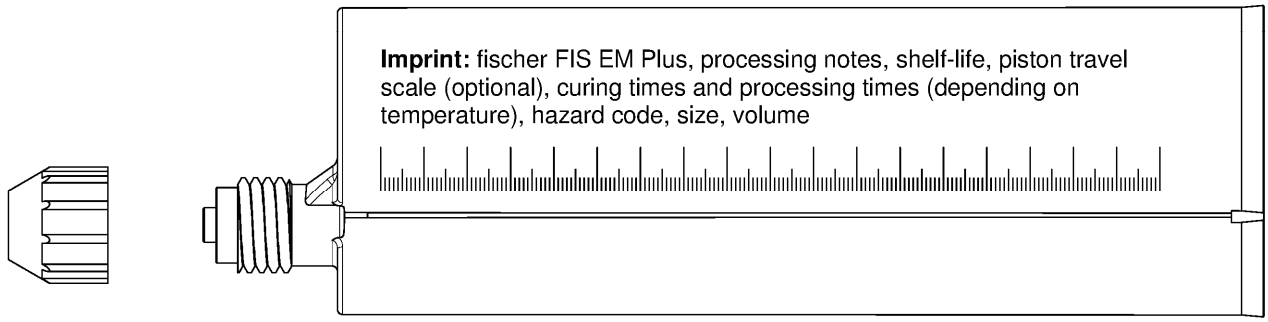

Static mixer FIS MR Plus or UMR

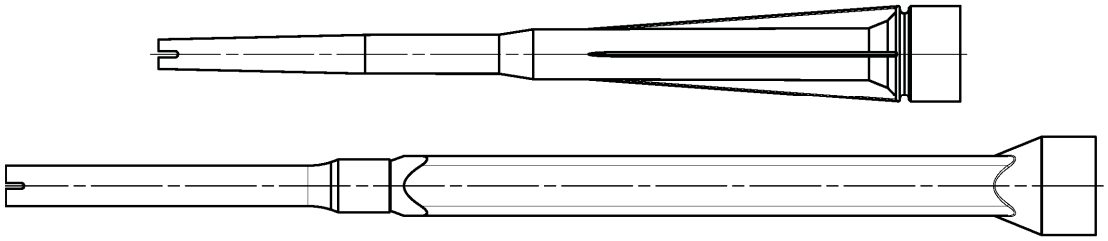

Injection adapter and Extension tube for static mixer

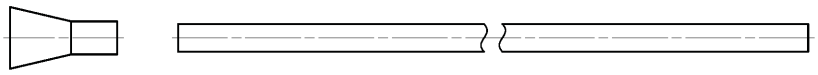

Cleaning brush BS / BSB

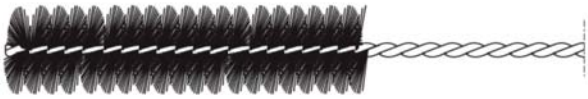

Blow-out pump ABP

Figures not to scale

fischer injection system FIS EM Plus	**Annex A 4**
System description Overview system components part 1; cartridges / static mixer / accessories	

Overview system components part 2

fischer anchor rod

Size: M8, M10, M12, M14, M16, M20, M22, M24, M27, M30

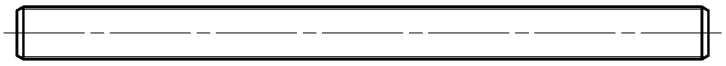

fischer internal threaded anchor RG MI

Size: M8, M10, M12, M16, M20

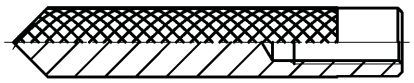

Screw / threaded rod / washer / hexagon nut

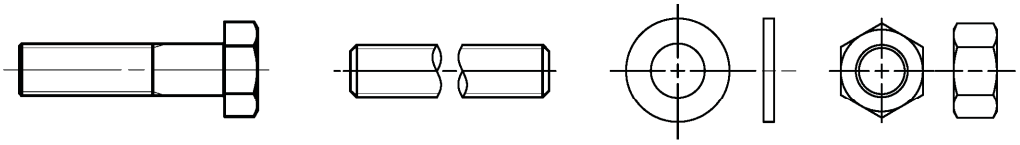

fischer filling disk FFD with injection adapter

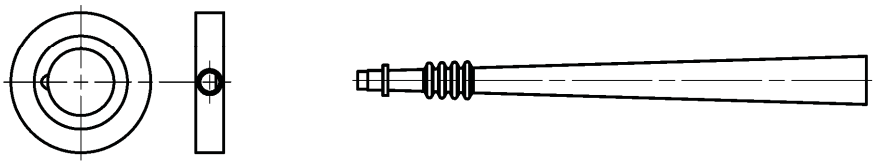

Reinforcing bar

Nominal diameter: ϕ8, ϕ10, ϕ12, ϕ14, ϕ16, ϕ18, ϕ20, ϕ22, ϕ24, ϕ25, ϕ26, ϕ28, ϕ30, ϕ32, ϕ34, ϕ36, ϕ40

fischer rebar anchor FRA

Size: M12, M16, M20, M24

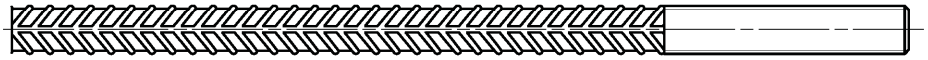

Figures not to scale

fischer injection system FIS EM Plus	**Annex A 5**
System description Overview system components part 2; steel components	

Table A6.1: Materials

Part	Designation	Material		
1	Injection cartridge	Mortar, hardener, filler		
	Steel grade	Steel, zinc plated	Stainless steel A4 [1]	High corrosion resistant steel C [2]
2	Anchor rod	Property class 5.8 or 8.8; EN ISO 898-1:2013 zinc plated ≥ 5 µm, EN ISO 4042:1999 A2K or hot-dip galvanized ≥ 40 µm EN ISO 10684:2004 f_{uk} ≤ 1000 N/mm² A_5 > 12% fracture elongation	Property class 50, 70 or 80 EN ISO 3506-1:2009 1.4401; 1.4404; 1.4578; 1.4571; 1.4439; 1.4362; 1.4062, 1.4662, 1.4462; EN 10088-1:2014[1] f_{uk} ≤ 1000 N/mm² A_5 > 12% fracture elongation	Property class 50 or 80 EN ISO 3506-1:2009 or property class 70 with f_{yk}= 560 N/mm² 1.4565; 1.4529; EN 10088-1:2014 f_{uk} ≤ 1000 N/mm² A_5 > 12% fracture elongation
		Fracture elongation A_5 > 8 %, for applications without requirements for seismic performance category C2		
3	Washer ISO 7089:2000	zinc plated ≥ 5 µm, EN ISO 4042:1999 A2K or hot-dip galvanised ≥ 40 µm EN ISO 10684:2004	1.4401; 1.4404; 1.4578;1.4571; 1.4439; 1.4362; EN 10088-1:2014	1.4565; 1.4529; EN 10088-1:2014
4	Hexagon nut	Property class 5 or 8; EN ISO 898-2:2012 zinc plated ≥ 5 µm, ISO 4042:1999 A2K or hot-dip galvanised ≥ 40 µm EN ISO 10684:2004	Property class 50, 70 or 80 EN ISO 3506-1:2009 1.4401; 1.4404; 1.4578; 1.4571; 1.4439; 1.4362; EN 10088-1:2014	Property class 50, 70 or 80 EN ISO 3506-1:2009 1.4565; 1.4529 EN 10088-1:2014
5	fischer internal threaded anchor RG MI	Property class 5.8 ISO 898-1:2013 zinc plated ≥ 5 µm, ISO 4042:1999 A2K	Property class 70 EN ISO 3506-1:2009 1.4401; 1.4404; 1.4578; 1.4571; 1.4439; 1.4362; EN 10088-1:2014	Property class 70 EN ISO 3506-1:2009 1.4565; 1.4529; EN 10088-1:2014
6	Commercial standard screw or anchor / threaded rod for fischer internal threaded anchor RG MI	Property class 5.8 or 8.8; EN ISO 898-1:2013 zinc plated ≥ 5 µm, ISO 4042:1999 A2K A_5 > 8 % fracture elongation	Property class 70 EN ISO 3506-1:2009 1.4401; 1.4404; 1.4578; 1.4571; 1.4439; 1.4362; EN 10088-1:2014[1] A_5 > 8 % fracture elongation	Property class 70 EN ISO 3506-1:2009 1.4565; 1.4529; EN 10088-1:2014 A_5 > 8 % fracture elongation
7	fischer filling disk FFD similar to DIN 6319-G	zinc plated ≥ 5 µm, EN ISO 4042:1999 A2K or hot-dip galvanised ≥ 40 µm EN ISO 10684:2004	1.4401; 1.4404; 1.4578; 1.4571; 1.4439; 1.4362; EN 10088-1:2014	1.4565;1.4529; EN 10088-1:2014
8	Reinforcing bar EN 1992-1-1:2004 and AC:2010, Annex C	Bars and de-coiled rods, class B or C with f_{yk} and k according to NDP or NCL of EN 1992-1-1:2004+AC:2010 $f_{uk} = f_{tk} = k \cdot f_{yk}$		
9	fischer rebar anchor FRA	Rebar part: Bars and de-coiled rods class B or C with f_{yk} and k according to NDP or NCL of EN 1992-1-1:2004+AC:2010 $f_{uk} = f_{tk} = k \cdot f_{yk}$	Threaded part: Property class 70 or 80 EN ISO 3506-1:2009 1.4401, 1.4404, 1.4571, 1.4578, 1.4439, 1.4362, 1.4062 EN 10088-1:2014 [1] 1.4565; 1.4529 EN 10088-1:2014 [2]	

[1] acc. to EN 10088-1:2014 Corrosion resistance class CRC III acc. to EN 1993-1-4:2015
[2] acc. to EN 10088-1:2014 Corrosion resistance class CRC V acc. to EN 1993-1-4:2015

Specifications of intended use (part 1)

Table B1.1: Overview use and performance categories

Anchorages subject to			FIS EM Plus with …							
			Anchor rod		fischer internal threaded anchor RG MI		Reinforcing bar		fischer rebar anchor FRA	
Hammer drilling with standard drill bit			all sizes							
Hammer drilling with hollow drill bit (fischer "FHD", Heller "Duster Expert"; Bosch „Speed Clean"; Hilti "TE-CD, TE-YD")			Nominal drill bit diameter (d_0) 12 mm to 35 mm							
Diamond drilling			all sizes							
Static and quasi static load, in	uncracked concrete		all sizes	Tables: C1.1 C4.1 C5.1 C6.1 C13.1	all sizes	Tables: C2.1 C4.1 C7.1 C8.1 C13.2	all sizes	Tables: C3.1 C4.1 C9.1 C10.1 C14.1	all sizes	Tables: C3.2 C4.1 C11.1 C12.1 C14.2
	cracked concrete									
Seismic performance category (only hammer drilling with standard / hollow drill bits)	C1		M10 to M30	Tables: C15.1 C16.2 C17.1	-		ϕ10 to ϕ32	Tables: C16.1 C16.2 C17.2	-	
	C2		M12 M16 M20 M24	Tables: C15.1 C16.2 C18.1			-	-		
Use category	I1	dry or wet concrete	all sizes							
	I2	water filled hole	all sizes (not permitted in combined with service life time 100 years)							
Installation direction			D3 (downward and horizontal and upwards (e.g. overhead) installation)							
Installation temperature			$T_{i,min}$ = -5 °C to $T_{i,max}$ = +40 °C							
In-service temperature	Temperature range I		-40 °C to +60 °C	(max. short term temperature +60 °C ; max. long term temperature +35 °C)						
	Temperature range II		-40 °C to +72 °C	(max. short term temperature +72 °C ; max. long term temperature +50 °C)						

fischer injection system FIS EM Plus

Intended use
Specifications (part 1)

Annex B 1

Specifications of intended use (part 2)

Base materials:

- Compacted reinforced or unreinforced normal weight concrete without fibres of strength classes C20/25 to C50/60 according to EN 206:2013+A1:2016

Use conditions (Environmental conditions):

- Structures subject to dry internal conditions
  (zinc coated steel, stainless steel or high corrosion resistant steel).
- For all other conditions according to EN1993-1-4:2015 corresponding to corrosion resistance classes to Annex A 6 table 6.1.

Design:

- Anchorages have to be designed by a responsible engineer with experience of concrete anchor design.
- Verifiable calculation notes and drawings are to be prepared taking account of the loads to be anchored. The position of the anchor is indicated on the design drawings (e. g. position of the anchor relative to reinforcement or to supports, etc.).
- Anchorages are designed in accordance with:
  EN 1992-4:2018 and EOTA Technical Report TR 055.
  Anchorages shall be positioned outside of critical regions (e.g. plastic hinges) of the concrete structure.
  Fastening in stand-off installation or with a grout layer under seismic action are not covered in this European Technical Assessment (ETA).

Installation:

- Anchor installation is to be carried out by appropriately qualified personnel and under the supervision of the person responsible for technical matters of the site
- In case of aborted hole: The hole shall be filled with mortar
- Anchorage depth should be marked and adhered to on installation
- Overhead installation is allowed

Table B3.1: Installation parameters for anchor rods

Anchor rods			Thread	M8	M10	M12	M14	M16	M20	M22	M24	M27	M30
Width across flats		SW	[mm]	13	17	19	22	24	30	32	36	41	46
Nominal drill hole diameter		d_0	[mm]	10	12	14	16	18	22 24[1)]	25	28	30	35
Drill hole depth		h_0	[mm]	$h_0 = h_{ef}$									
Effective embedment depth		$h_{ef,\,min}$	[mm]	60	60	70	75	80	90	93	96	108	120
		$h_{ef,\,max}$	[mm]	160	200	240	280	320	400	440	480	540	600
Diameter of the clearance hole of the fixture	pre-positioned installation	d_f	[mm]	9	12	14	16	18	22	24	26	30	33
	push through installation	d_f	[mm]	12	14	16	18	20	26	28	30	33	40
Minimum thickness of concrete member		h_{min}	[mm]	$h_{ef} + 30$ (≥ 100)			$h_{ef} + 2d_0$						
Maximum torque moment for attachment of the fixture		max T_{fix}	[Nm]	10	20	40	50	60	120	135	150	200	300

[1)] Both drill hole diameters can be used

fischer anchor rod

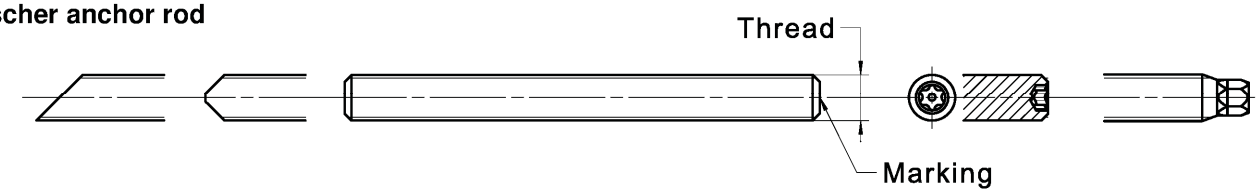

Marking (on random place) fischer anchor rod:

Property class 8.8, stainless steel, property class 80 and high corrosion resistant steel, property class 80: •
Stainless steel A4, property class 50 and high corrosion resistant steel, property class 50: ••
Alternatively: Colour coding according to DIN 976-1

Installation conditions:

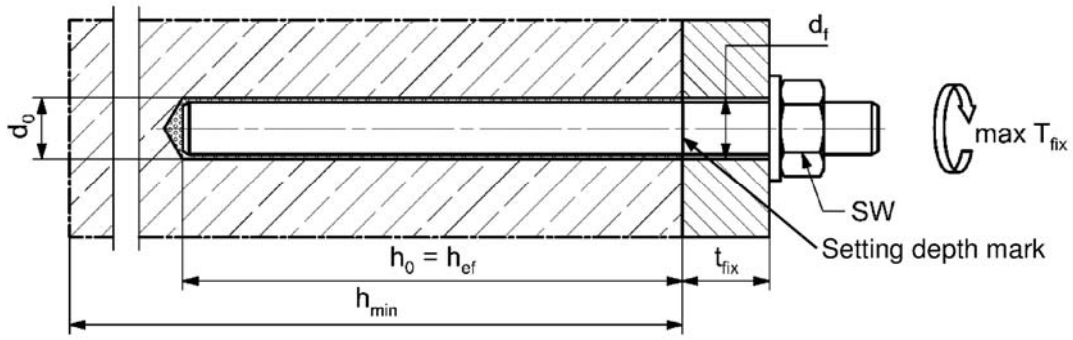

Commercial standard threaded rods, washers and hexagon nuts may also be used if the following requirements are fulfilled

- Materials, dimensions and mechanical properties according to Annex A 6, Table A6.1
- Inspection certificate 3.1 according to EN 10204:2004, the documents have to be stored
- Setting depth is marked

Figures not to scale

Table B4.1: Minimum spacing and minimum edge distance for anchor rods and reinforcing bars

Anchor rods			**M8**	**M10**	**M12**	**M14**	**M16**	**-**	**M20**	**M22**	**M24**
Reinforcing bars (nominal diameter)		**ϕ**	**8**	**10**	**12**	**14**	**16**	**18**	**20**	**22**	**24**
Minimum edge distance											
Uncracked / cracked concrete	c_{min}	[mm]	40	45	45	45	50	55	55	55	60
Minimum spacing	s_{min}		according to Annex B5								
Minimum spacing											
Uncracked / cracked concrete	s_{min}	[mm]	40	45	55	60	65	85	85	95	105
Minimum edge distance	c_{min}		according to Annex B5								
Required projecting area											
Uncracked concrete	$A_{sp,req}$	[1000 mm²]	8	13	22	23	24	38,5	38,5	39,5	40
Cracked concrete	$A_{sp,req}$	[1000 mm²]	6,5	10	16,5	17,5	18,5	29,5	29,5	30	30,5

Anchor rods			**-**	**-**	**M27**	**-**	**M30**	**-**	**-**	**-**	**-**
Reinforcing bars (nominal diameter)		**ϕ**	**25**	**26**	**-**	**28**	**30**	**32**	**34**	**36**	**40**
Minimum edge distance											
Uncracked / cracked concrete	c_{min}	[mm]	75	75	75	80	80	120	120	135	175
Minimum spacing	s_{min}		according to Annex B5								
Minimum spacing											
Uncracked / cracked concrete	s_{min}	[mm]	120	120	120	140	140	160	160	160	160
Minimum edge distance	c_{min}		according to Annex B5								
Required projecting area											
Uncracked concrete	$A_{sp,req}$	[1000 mm²]	47,5	47,5	47,5	64	64	64	64	64	64
Cracked concrete	$A_{sp,req}$	[1000 mm²]	36,5	36,5	36,5	49	49	49	49	49	49

Splitting failure for minimum edge distance and spacing in dependence of the effective embedment depth h_{ef}.

For the calculation of minimum spacing and minimum edge distance of anchors in combination with different embedment depths and thicknesses of concrete members the following equation shall be fulfilled:

$$\mathbf{A_{sp,req} < A_{sp,t}}$$

$A_{sp,req}$ = required projecting area
$A_{sp,t}$ = $A_{sp,ef}$ = effective projecting area (according to Annex B5)

Table B5.1: Effective projecting area $A_{sp,t}$ with concrete member thickness $h > h_{ef} + 1{,}5 \cdot c$ and $h \geq h_{min}$

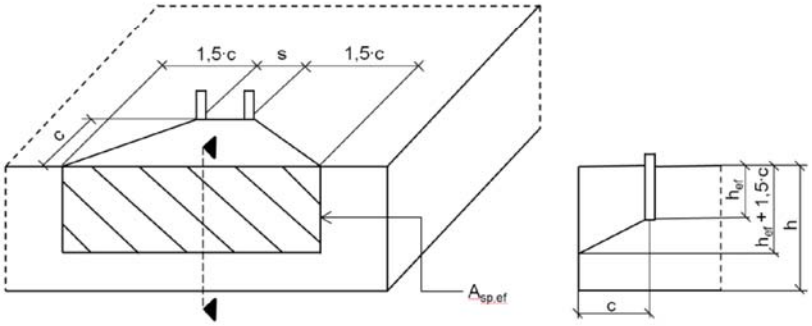

Single anchor	$A_{sp,t} = (3 \cdot c) \cdot (h_{ef} + 1{,}5 \cdot c)$	[mm²]	with $c \geq c_{min}$
Group of anchors with $s > 3 \cdot c$	$A_{sp,t} = (6 \cdot c) \cdot (h_{ef} + 1{,}5 \cdot c)$	[mm²]	
Group of anchors with $s \leq 3 \cdot c$	$A_{sp,t} = (3 \cdot c + s) \cdot (h_{ef} + 1{,}5 \cdot c)$	[mm²]	with $c \geq c_{min}$ and $s \geq s_{min}$

Table B5.2: Effektive projecting area $A_{sp,t}$ with concrete member thickness $h \leq h_{ef} + 1{,}5 \cdot c$ and $h \geq h_{min}$

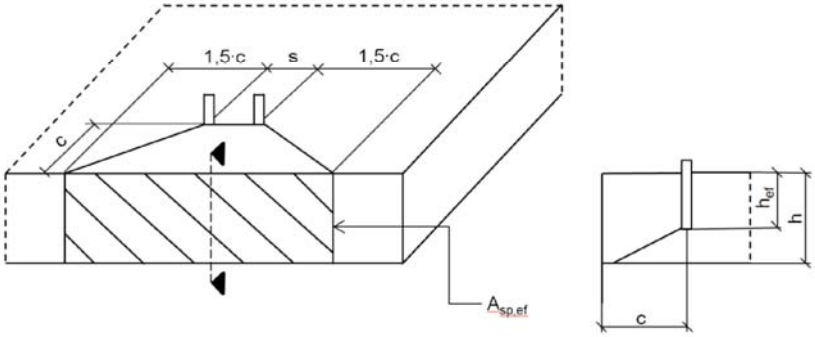

Single anchor	$A_{sp,t} = 3 \cdot c \cdot$ existing h	[mm²]	with $c \geq c_{min}$
Group of anchors with $s > 3 \cdot c$	$A_{sp,t} = 6 \cdot c \cdot$ existing h	[mm²]	
Group of anchors with $s \leq 3 \cdot c$	$A_{sp,t} = (3 \cdot c + s) \cdot$ existing h	[mm²]	with $c \geq c_{min}$ and $s \geq s_{min}$

Edge distance and axial spacing shall be rounded up to at least 5 mm

Figures not to scale

fischer injection system FIS EM Plus

Intended use
Minimum thickness of concrete member for anchor rods, minimum spacing and edge distance

Annex B 5

Table B6.1: Installation parameters plus minimum spacing and minimum edge distance for fischer internal threaded anchors RG MI

Internal threaded anchors RG MI		Thread	M8	M10	M12	M16	M20
Diameter of anchor	$d_{nom} = d_H$		12	16	18	22	28
Nominal drill hole diameter	d_0		14	18	20	24	32
Drill hole depth	h_0		$h_0 = h_{ef} = L_H$				
Effective embedment depth ($h_{ef} = L_H$)	h_{ef}		90	90	125	160	200
Minimum spacing and minimum edge distance	s_{min} = c_{min}	[mm]	55	65	75	95	125
Diameter of clearance hole in the fixture	d_f		9	12	14	18	22
Minimum thickness of concrete member	h_{min}		120	125	165	205	260
Maximum screw-in depth	$l_{E,max}$		18	23	26	35	45
Minimum screw-in depth	$l_{E,min}$		8	10	12	16	20
Maximum torque moment for attachment of the fixture	max T_{fix}	[Nm]	10	20	40	80	120

fischer internal threaded anchor RG MI

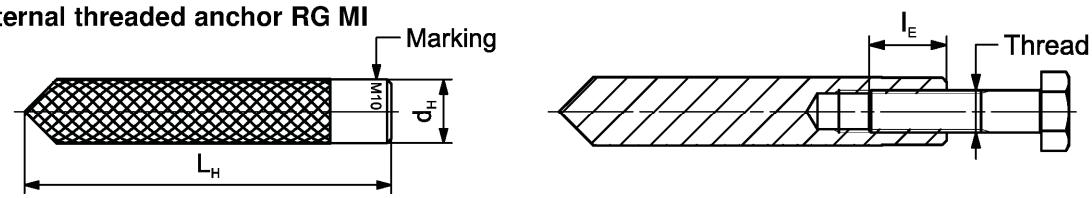

Marking: Anchor size e. g.: **M10**
Stainless steel → additional **A4**; e.g.: **M10 A4**
High corrosion resistant steel → additional C; e.g.: **M10 C**

Retaining bolt or threaded rods (including nut and washer) must comply with the appropriate material and strength class of Annex A 6, Table A6.1

Installation conditions:

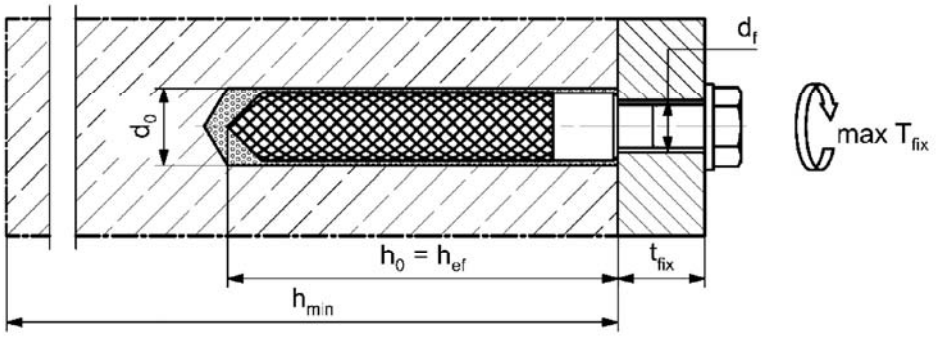

Figures not to scale

fischer injection system FIS EM Plus

Intended use
Installation parameters internal threaded anchors RG MI

Annex B 6

Table B7.1: Installation parameters for reinforcing bars

Nominal diameter of the bar		**ϕ**	**8[1)]**	**10[1)]**	**12[1)]**	**14**	**16**	**18**	**20**	**22**	**24**
Nominal drill hole diameter	d_0	[mm]	10 / 12	12 / 14	14 / 16	18	20	25	25	30	30
Drill hole depth	h_0	[mm]	$h_0 = h_{ef}$								
Effective embedment depth	$h_{ef,min}$	[mm]	60	60	70	75	80	85	90	94	98
	$h_{ef,max}$	[mm]	160	200	240	280	320	360	400	440	480
Minimum thickness of concrete member	h_{min}	[mm]	h_{ef} + 30 (≥ 100)		$h_{ef} + 2d_0$						

Nominal diameter of the bar		**ϕ**	**25**	**26**	**28**	**30**	**32**	**34**	**36**	**40**	**-**
Nominal drill hole diameter	d_0	[mm]	30	35	35	40	40	40	45	55	-
Drill hole depth	h_0	[mm]	$h_0 = h_{ef}$								
Effective embedment depth	$h_{ef,min}$	[mm]	100	104	112	120	128	136	144	160	-
	$h_{ef,max}$	[mm]	500	520	560	600	640	680	720	800	-
Minimum thickness of concrete member	h_{min}	[mm]	$h_{ef} + 2d_0$								

[1)] Both drill hole diameters can be used

Reinforcing bar

- The minimum value of related rib area $f_{R,min}$ must fulfil the requirements of EN 1992-1-1:2004+AC:2010
- The rib height must be within the range: $0{,}05 \cdot \phi \leq h_{rib} \leq 0{,}07 \cdot \phi$
  (ϕ = Nominal diameter of the bar , h_{rib} = rib height)

Installation conditions:

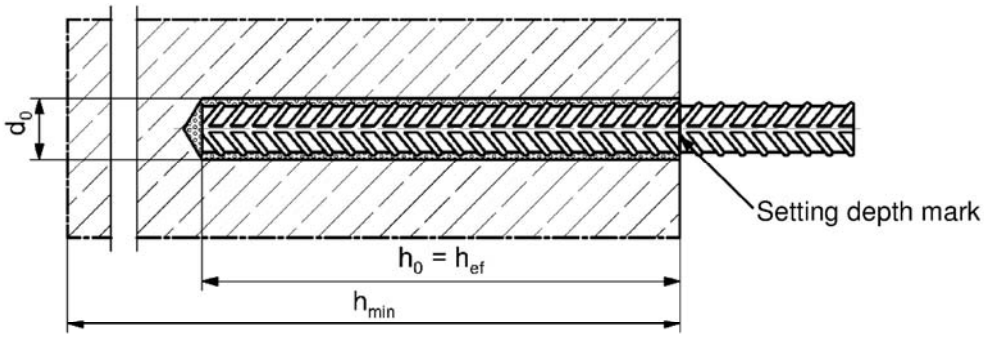

Figures not to scale

fischer injection system FIS EM Plus

Intended use
Installation parameters reinforcing bars

Annex B 7

Table B8.1: Installation parameters plus minimum spacing and minimum edge distance for fischer rebar anchor FRA

Rebar anchor FRA		Thread	M12[1)]		M16	M20	M24
Nominal diameter of the bar	ϕ	[mm]	12		16	20	25
Width across flats	SW	[mm]	19		24	30	36
Nominal drill hole diameter	d_0	[mm]	14	16	20	25	30
Drill hole depth	h_0	[mm]	$h_{ef} + l_e$				
Effective embedment depth	$h_{ef,min}$	[mm]	70		80	90	96
	$h_{ef,max}$	[mm]	140		220	300	380
Distance concrete surface to welded joint	l_e	[mm]	100				
Minimum spacing and minimum edge distance	s_{min} = c_{min}	[mm]	55		65	85	105
Diameter of clearance hole in the fixture – pre-positioned anchorage	$\leq d_f$	[mm]	14		18	22	26
Diameter of clearance hole in the fixture – push through anchorage	$\leq d_f$	[mm]	18		22	26	32
Minimum thickness of concrete member	h_{min}	[mm]	$h_0 + 30$ (≥ 100)		$h_0 + 2d_0$		
Maximum torque moment for attachment of the fixture	max T_{fix}	[Nm]	40		60	120	150

[1)] Both drill hole diameters can be used

fischer rebar anchor FRA

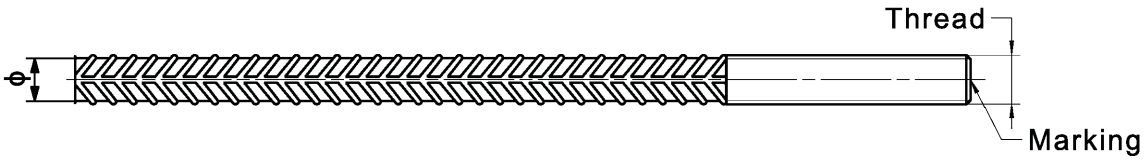

Marking frontal e. g: FRA (for stainless steel); FRA C (for high corrosion resistant steel)

Installation conditions:

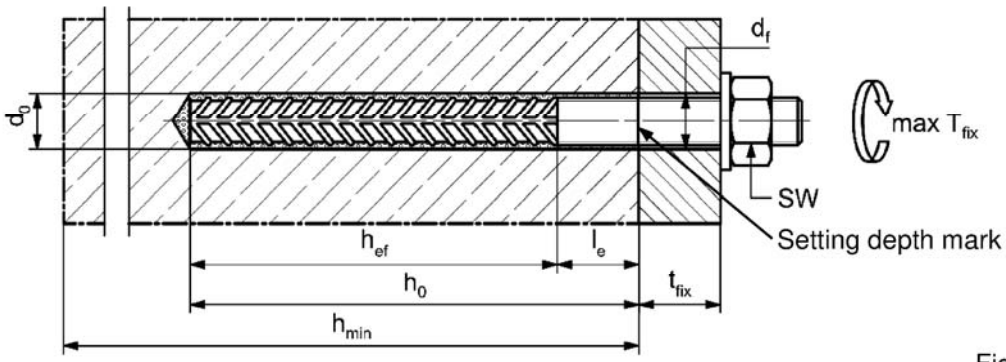

Figures not to scale

fischer injection system FIS EM Plus

Intended use
Installation parameters rebar anchor FRA

Annex B 8

Table B9.1: Parameters of the cleaning brush BS / BSB (steel brush)

The size of the cleaning brush refers to the drill hole diameter

Nominal drill hole diameter	d_0	[mm]	10	12	14	16	18	20	24	25	28	30	32	35	40	45	55
Steel brush diameter	d_b		11	14	16	20		25	26	27	30	40			42	47	58

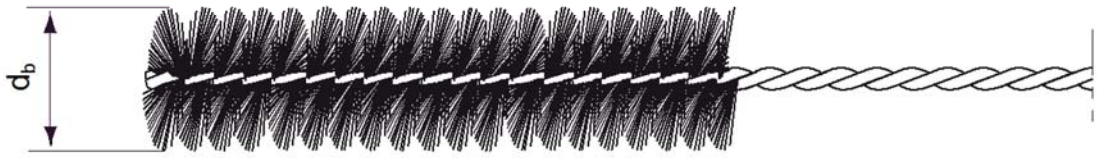

Table B9.2 Maximum processing time of the mortar and minimum curing time (During the curing time of the mortar the concrete temperature may not fall below the listed minimum temperature)

Temperature at anchoring base [°C]	Maximum processing time t_{work}	Minimum curing time t_{cure}
-5 to -1	240 min	200 h
±0 to +4	150 min	90 h
+5 to +9	120 min	40 h
+10 to +19	30 min	18 h
+20 to +29	14 min	10 h
+30 to +40	7 min	5 h

[1)] In wet concrete or water filled holes the curing times must be doubled

Installation instructions part 1

Drilling and cleaning the hole (hammer drilling with standard drill bit)

1	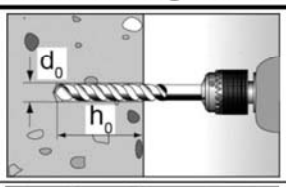	Drill the hole. Nominal drill hole diameter $\mathbf{d_0}$ and drill hole depth $\mathbf{h_0}$ see **tables B3.1, B6.1, B7.1, B8.1**
2	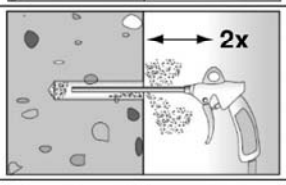	Cleaning the drill hole: Blow out the drill hole twice, with oil free compressed air (p ≥ 6 bar)
3	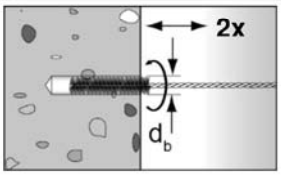	Brush the drill hole twice. For drill hole diameter ≥ 30 mm use a power drill. For deep holes use an extension. Corresponding brushes see **table B9.1**
4	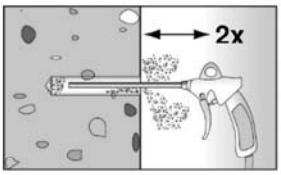	Cleaning the drill hole: Blow out the drill hole twice, with oil free compressed air (p ≥ 6 bar)

Go to step 6

Drilling and cleaning the hole (hammer drilling with hollow drill bit)

1		Check a suitable hollow drill (see **table B1.1**) for correct operation of the dust extraction
2	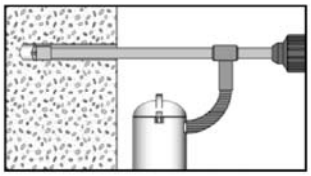	Use a suitable dust extraction system, e. g. Bosch GAS 35 M AFC or a comparable dust extraction system with equivalent performance data Drill the hole with hollow drill bit. The dust extraction system has to extract the drill dust nonstop during the drilling process and must be adjusted to maximum power. Nominal drill hole diameter $\mathbf{d_0}$ and drill hole depth $\mathbf{h_0}$ see **tables B3.1, B6.1, B7.1, B8.1**

Go to step 6

Installation instructions part 2

Drilling and cleaning the hole (wet drilling with diamond drill bit)

1	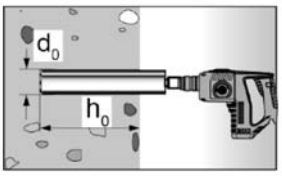	Drill the hole. Drill hole diameter $\mathbf{d_0}$ and nominal drill hole depth $\mathbf{h_0}$ see **tables B3.1, B6.1, B7.1, B8.1**	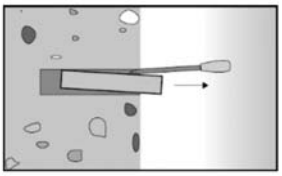	Break the drill core and remove it
2	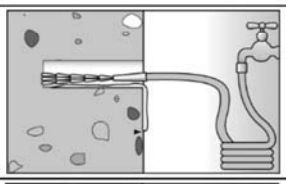	Flush the drill hole with clean water until it flows clear		
3	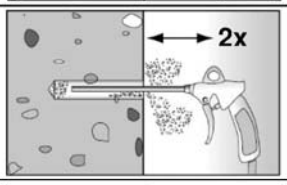	Blow out the drill hole twice, using oil-free compressed air (p > 6 bar)		
4	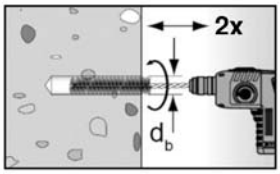	Brush the drill hole twice using a power drill. Corresponding brushes see **table B9.1**		
5	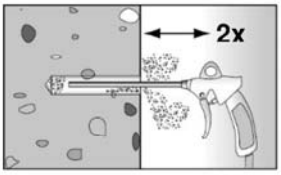	Blow out the drill hole twice, using oil-free compressed air (p > 6 bar)		

Preparing the cartridge

6	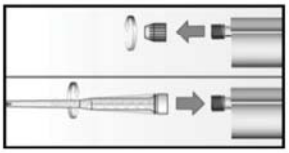	Remove the sealing cap Screw on the static mixer (the spiral in the static mixer must be clearly visible)	
7	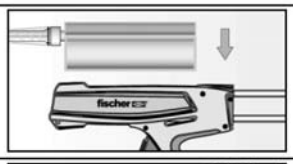	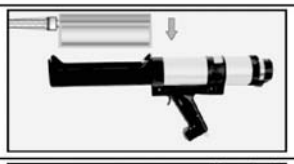	Place the cartridge into the dispenser
8		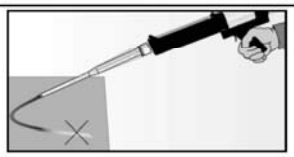	Extrude approximately 10 cm of material out until the resin is evenly grey in colour. Do not use mortar that is not uniformly grey

Installation instructions part 3

Injection of the mortar

9

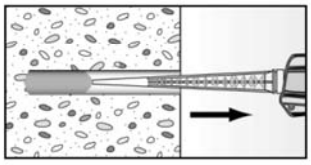

Fill approximately 2/3 of the drill hole with mortar. Always begin from the bottom of the hole and avoid bubbles

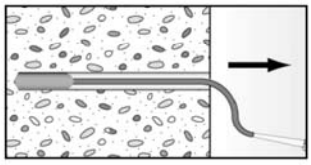

For drill hole depth ≥ 150 mm use an extension tube

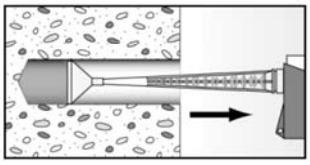

For overhead installation, deep holes (h_0 > 250 mm) or drill hole diameter (d_0 ≥ 40 mm) use an injection-adapter

Installation of anchor rods or fischer internal threaded anchors RG MI

10

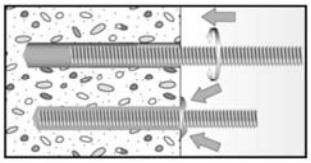

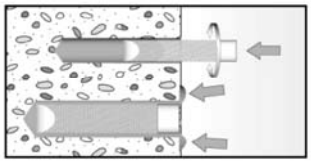

Only use clean and oil-free anchor elements. Mark the setting depth of the anchor. Push the anchor rod or fischer internal threaded RG MI anchor down to the bottom of the hole, turning it slightly while doing so.
After inserting the anchor element, excess mortar must be emerged around the anchor element.

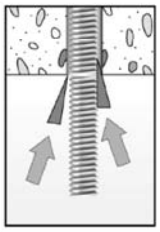

For overhead installations support the anchor rod with wedges (e. g. fischer centering wedges) or fischer overhead clips.

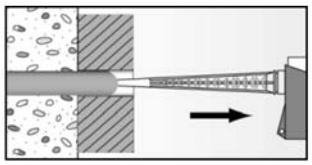

For push through installation fill the annular gap with mortar

11

Wait for the specified curing time t_{cure} see **table B9.2**

12

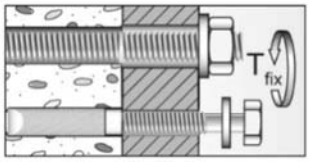

Mounting the fixture max T_{fix} see **tables B3.1 and B6.1**

Option

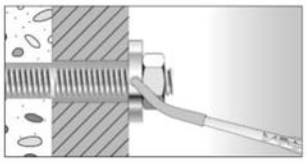

After the minimum curing time is reached, the gap between anchor and fixture (annular clearance) may be filled with mortar via the fischer filling disc FFD. Compressive strength ≥ 50 N/mm² (e.g. fischer injection mortars FIS HB, FIS SB, FIS V, FIS EM Plus)
ATTENTION: Using fischer filling disk FFD reduces t_{fix} (usable length of the anchor)

Installation instructions part 4

Installation reinforcing bars and fischer rebar anchor FRA

10	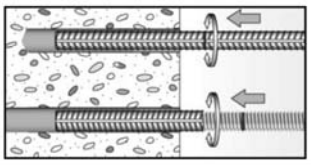	Only use clean and oil-free reinforcing bars or fischer FRA. Mark the setting depth. Turn while using force to push the reinforcement bar or the fischer FRA into the filled hole up to the setting depth mark			
	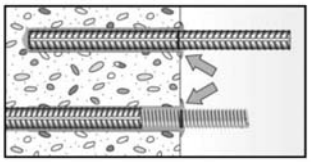	When the setting depth mark is reached, excess mortar must be emerged from the mouth of the drill hole.			
11		Wait for the specified curing time t_{cure} see **table B9.2**	12	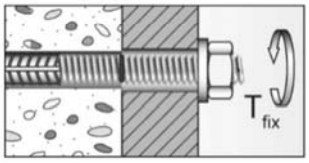	Mounting the fixture max T_{fix} see **table B8.1**

fischer injection system FIS EM Plus	**Annex B 13**
Intended use Installation instructions part 4	

Table C1.1: Essential characteristics[3)] for the **steel bearing capacity** under tensile / shear load of **fischer anchor rods** and **standard threaded rods**

Anchor rod / standard threaded rod				**M8**	**M10**	**M12**	**M14**	**M16**	**M20**	**M22**	**M24**	**M27**	**M30**
Bearing capacity under tensile load, steel failure													
Characterstic resistance $N_{Rk,s}$	Steel zinc plated	Property class 5.8	[kN]	19(17)	29(27)	43	58	79	123	152	177	230	281
		8.8		29(27)	47(43)	68	92	126	196	243	282	368	449
	Stainless steel A4 and high corrosion resistant steel C	50		19	29	43	58	79	123	152	177	230	281
		70		26	41	59	81	110	172	212	247	322	393
		80		30	47	68	92	126	196	243	282	368	449
Partial factors [1)]													
Partial factor $\gamma_{Ms,N}$	Steel zinc plated	Property class 5.8	[-]	1,50									
		8.8		1,50									
	Stainless steel A4 and high corrosion resistant steel C	50		2,86									
		70		1,50[2)] / 1,87									
		80		1,60									
Bearing capacity under shear load, steel failure													
without lever arm													
Characterstic resistance $V^0_{Rk,s}$	Steel zinc plated	Property class 5.8	[kN]	9(8)	15(13)	21	29	39	61	76	89	115	141
		8.8		15(13)	23(21)	34	46	63	98	122	141	184	225
	Stainless steel A4 and high corrosion resistant steel C	50		9	15	21	29	39	61	76	89	115	141
		70		13	20	30	40	55	86	107	124	161	197
		80		15	23	34	46	63	98	122	141	184	225
Ductility factor		k_7	[-]	1,0									
with lever arm													
Charact. resistance $M^0_{Rk,s}$	Steel zinc plated	Property class 5.8	[Nm]	19(16)	37(33)	65	104	166	324	447	560	833	1123
		8.8		30(26)	60(53)	105	167	266	519	716	896	1333	1797
	Stainless steel A4 and high corrosion resistant steel C	50		19	37	65	104	166	324	447	560	833	1123
		70		26	52	92	146	232	454	626	784	1167	1573
		80		30	60	105	167	266	519	716	896	1333	1797
Partial factors [1)]													
Partial factor $\gamma_{Ms,V}$	Steel zinc plated	Property class 5.8	[-]	1,25									
		8.8		1,25									
	Stainless steel A4 and high corrosion resistant steel C	50		2,38									
		70		1,25[2)] / 1,56									
		80		1,33									

[1)] In absence of other national regulations
[2)] Only admissible for high corrosion resistant steel C, with f_{yk} / f_{uk} ≥ 0,8 and A_5 > 12 % (e.g. fischer anchor rods)
[3)] Values in brackets are valid for undersized threaded rods with smaller stress area A_s for hotdip galvanized standard threaded rods according to EN ISO 10684:2004+AC:2009

Table C2.1: Essential characteristics for the **steel bearing capacity** under tensile / shear load of **fischer internal threaded anchors RG MI**

fischer internal threaded anchors RG MI					M8	M10	M12	M16	M20
Bearing capacity under tensile load, steel failure									
Charact. resistance with screw	$N_{Rk,s}$	Property class	5.8	[kN]	19	29	43	79	123
			8.8		29	47	68	108	179
		Property class 70	A4		26	41	59	110	172
			C		26	41	59	110	172
Partial factors[1)]									
Partial factors	$\gamma_{Ms,N}$	Property class	5.8	[-]	1,50				
			8.8		1,50				
		Property class 70	A4		1,87				
			C		1,87				
Bearing capacity under shear load, steel failure									
Without lever arm									
Charact. resistance with screw	$V^0_{Rk,s}$	Property class	5.8	[kN]	9,2	14,5	21,1	39,2	62,0
			8.8		14,6	23,2	33,7	54,0	90,0
		Property class 70	A4		12,8	20,3	29,5	54,8	86,0
			C		12,8	20,3	29,5	54,8	86,0
Ductility factor			k_7	[-]	1,0				
With lever arm									
Charact. resistance with screw	$M^0_{Rk,s}$	Property class	5.8	[Nm]	20	39	68	173	337
			8.8		30	60	105	266	519
		Property class 70	A4		26	52	92	232	454
			C		26	52	92	232	454
Partial factors[1)]									
Partial factors	$\gamma_{Ms,V}$	Property class	5.8	[-]	1,25				
			8.8		1,25				
		Property class 70	A4		1,56				
			C		1,56				

[1)] In absence of other national regulations

Table C3.1: Essential characteristics for the **steel bearing capacity** under tensile / shear load of **reinforcing bars**

Nominal diameter of the bar		**ϕ**	**8**	**10**	**12**	**14**	**16**	**18**	**20**	**22**	**24**	**25**	**26**	**28**	**30**	**32**	**34**	**36**	**40**
Bearing capacity under tensile load, steel failure																			
Characterstic resistance	$N_{Rk,s}$	[kN]	$A_s \cdot f_{uk}$ [1)]																
Bearing capacity under shear load, steel failure																			
Without lever arm																			
Characterstic resistance	$V^0_{Rk,s}$	[kN]	$0{,}5 \cdot A_s \cdot f_{uk}$ [1)]																
Ductility factor	k_7	[-]	0,8																
With lever arm																			
Characteristic resistance	$M^0_{Rk,s}$	[Nm]	$1{,}2 \cdot W_{el} \cdot f_{uk}$ [1)]																

[1)] f_{uk} or f_{yk} respectively must be taken from the specifications of the reinforcing bar

Table C3.2: Essential characteristics for the **steel bearing capacity** under tensile / shear load of **fischer rebar anchors FRA**

fischer rebar anchor FRA			**M12**	**M16**	**M20**	**M24**
Bearing capacity under tensile load, steel failure						
Characterstic resistance	$N_{Rk,s}$	[kN]	63	111	173	270
Partial factor[1)]						
Partial factor	$\gamma_{Ms,N}$	[-]	1,4			
Bearing capacity under shear load, steel failure						
Without lever arm						
Characterstic resistance	$V^0_{Rk,s}$	[kN]	30	55	86	124
Ductility factor	k_7	[-]	1,0			
With lever arm						
Characteristic resistance	$M^0_{Rk,s}$	[Nm]	92	233	454	785
Partial factor[1)]						
Partial factor	$\gamma_{Ms,V}$	[-]	1,56			

[1)] In absence of other national regulations

Table C4.1: Essential characteristics under tensile / shear load

Size				All sizes
Tensile load				
Uncracked concrete		$k_{ucr,N}$	[-]	11,0
Cracked concrete		$k_{cr,N}$	[-]	7,7
Factors for the compressive strength of concrete > C20/25				
Increasing factor for τ_{Rk}	C25/30	Ψ_c	[-]	1,02
	C30/37			1,04
	C35/45			1,06
	C40/50			1,07
	C45/55			1,08
	C50/60			1,09
Splitting failure				
Edge distance	$h / h_{ef} \geq 2{,}0$	$c_{cr,sp}$	[mm]	$1{,}0\ h_{ef}$
	$2{,}0 > h / h_{ef} > 1{,}3$			$4{,}6\ h_{ef} - 1{,}8\ h$
	$h / h_{ef} \leq 1{,}3$			$2{,}26\ h_{ef}$
Spacing		$s_{cr,sp}$		$2\ c_{cr,sp}$
Concrete cone failure				
Edge distance		$c_{cr,N}$	[mm]	$1{,}5\ h_{ef}$
Spacing		$s_{cr,N}$		$2\ c_{cr,N}$
Shear load				
Installation factor		γ_{inst}	[-]	1,0
Concrete pry-out failure				
Factor for pry-out failure		k_8	[-]	2,0
Concrete edge failure				
The value of h_{ef} (=l_f) under shear load			[-]	Conditions according to 1992-4:2018: chapter 7.2.2.5; Section 6; formular 7.43

Calculation diameters												
Size			M8	M10	M12	M14	M16	M20	M22	M24	M27	M30
fischer anchor rods and standard threaded rods	d_{nom}	[mm]	8	10	12	14	16	20	22	24	27	30
fischer internal threaded anchors RG MI	d_{nom}	[mm]	12	16	18	-	22	28	-	-	-	-
fischer rebar anchor FRA	d_{nom}	[mm]	-	-	12	-	16	20	-	25	-	-

Size (nominal diameter of the bar)		ϕ	8	10	12	14	16	18	20	22	24	25	26	28	30	32	34	36	40
Reinforcing bar	d_{nom}	[mm]	8	10	12	14	16	18	20	22	24	25	26	28	30	32	34	36	40

Table C5.1: Essential characteristics of **tensile resistance** for **fischer anchor rods** and **standard threaded rods** in hammer or diamond drilled holes; **uncracked or cracked concrete; service life time 50 years**

Anchor rod / standard threaded rod				**M8**	**M10**	**M12**	**M14**	**M16**	**M20**	**M22**	**M24**	**M27**	**M30**
Combined pullout and concrete cone failure													
Calculation diameter		d	[mm]	8	10	12	14	16	20	22	24	27	30
Uncracked concrete													
Characteristic bond resistance in uncracked concrete C20/25													
Hammer-drilling with standard drill bit or hollow drill bit (dry or wet concrete)													
Temperature range	I: 35 °C / 60 °C	$\tau_{Rk,ucr}$	[N/mm²]	18	18	18	17	17	16	15	15	15	14
	II: 50 °C / 72 °C			18	17	17	16	16	15	14	14	14	13
Hammer-drilling with standard drill bit or hollow drill bit (water filled hole)													
Temperature range	I: 35 °C / 60 °C	$\tau_{Rk,ucr}$	[N/mm²]	16	16	15	13	13	11	11	10	10	9
	II: 50 °C / 72 °C			15	14	14	13	12	11	10	10	9	9
Diamond-drilling (dry or wet concrete as well as water filled hole)													
Temperature range	I: 35 °C / 60 °C	$\tau_{Rk,ucr}$	[N/mm²]	16	15	13	12	12	10	10	10	9	9
	II: 50 °C / 72 °C			15	14	12	11	11	10	9	9	8	8
Installation factors													
Dry or wet concrete		γ_{inst}	[-]	1,0									
Water filled hole				1,4									
Cracked concrete													
Characteristic bond resistance in cracked concrete C20/25													
Hammer-drilling with standard drill bit or hollow drill bit (dry or wet concrete)													
Temperature range	I: 35 °C / 60 °C	$\tau_{Rk,cr}$	[N/mm²]	7,5	7,5	9	8,5	8,5	8,5	8,5	8,5	8,5	8,5
	II: 50 °C / 72 °C			7,5	7,5	9	8,5	8,5	8,5	8,5	8,5	8,5	8,5
Diamond - drilling (dry or wet concrete)													
Temperature range	I: 35 °C / 60 °C	$\tau_{Rk,cr}$	[N/mm²]	7	7	7	7	6	6	7	7	7	7
	II: 50 °C / 72 °C			7	7	7	7	6	6	7	7	7	7
Hammer-drilling with standard drill bit or hollow drill bit and diamond-drilling (water filled hole)													
Temperature range	I: 35 °C / 60 °C	$\tau_{Rk,cr}$	[N/mm²]	6	7,5	7,5	7	6	6	6	6	6	6
	II: 50 °C / 72 °C			6	7	7	7	6	6	6	6	6	6
Installation factors													
Dry or wet concrete		γ_{inst}	[-]	1,0									
Water filled hole				1,2					1,4				

fischer injection system FIS EM Plus

Performance
Essential characteristics of tensile resistance for fischer anchor rod and standard threaded rods; service life time 50 years

Annex C 5

Table C6.1: Essential characteristics of **tensile resistance** for **fischer anchor rods** and **standard threaded rods** in hammer or diamond drilled holes; **uncracked or cracked concrete; service life time 100 years**

Anchor rod / standard threaded rod				**M8**	**M10**	**M12**	**M14**	**M16**	**M20**	**M22**	**M24**	**M27**	**M30**
Combined pullout and concrete cone failure													
Calculation diameter		d	[mm]	8	10	12	14	16	20	22	24	27	30
Uncracked concrete													
Characteristic bond resistance in uncracked concrete C20/25													
Hammer-drilling with standard drill bit or hollow drill bit (dry or wet concrete)													
Temperature range	I: 35 °C / 60 °C	$\tau_{Rk,ucr}$	[N/mm²]	18	18	18	17	17	16	15	15	15	14
	II: 50 °C / 72 °C			18	17	17	16	16	15	14	14	14	13
Diamond-drilling (dry or wet concrete)													
Temperature range	I: 35 °C / 60 °C	$\tau_{Rk,ucr}$	[N/mm²]	16	15	13	12	12	10	10	10	9	9
	II: 50 °C / 72 °C			15	14	12	11	11	10	9	9	8	8
Installation factors													
Dry or wet concrete		γ_{inst}	[-]	1,0									
Service life time 100 years	I: 35 °C / 60 °C	$\alpha_{100\ years}$	[-]	0,75	0,75	0,75	0,75	0,75	0,75	0,75	0,75	0,75	0,75
	II: 50 °C / 72 °C			0,55	0,60	0,60	0,65	0,65	0,65	0,65	0,65	0,65	0,65
Cracked concrete													
Characteristic bond resistance in cracked concrete C20/25													
Hammer-drilling with standard drill bit or hollow drill bit (dry or wet concrete)													
Temperature range	I: 35 °C / 60 °C	$\tau_{Rk,cr}$	[N/mm²]	7,5	7,5	9	8,5	8,5	8,5	8,5	8,5	8,5	8,5
	II: 50 °C / 72 °C			7,5	7,5	9	8,5	8,5	8,5	8,5	8,5	8,5	8,5
Diamond - drilling (dry or wet concrete)													
Temperature range	I: 35 °C / 60 °C	$\tau_{Rk,cr}$	[N/mm²]	7	7	7	7	6	6	7	7	7	7
	II: 50 °C / 72 °C			7	7	7	7	6	6	7	7	7	7
Installation factors													
Dry or wet concrete		γ_{inst}	[-]	1,0									
Service life time 100 years	I: 35 °C / 60 °C	$\alpha_{100\ years}$	[-]	0,60	0,85	0,80	0,65	0,65	0,65	0,65	0,65	0,65	0,65
	II: 50 °C / 72 °C			0,60	0,85	0,80	0,65	0,65	0,65	0,65	0,65	0,65	0,65

1) **Calculation of characteristic bond resistance in uncracked concrete $\tau_{Rk,100\ years,ucr}$:**

$$\tau_{Rk,100\ years,ucr} = \alpha_{100\ years} \cdot \tau_{Rk,ucr}$$

2) **Calculation of characteristic bond resistance in cracked concrete $\tau_{Rk,100\ years,cr}$:**

$$\tau_{Rk,100\ years,cr} = \alpha_{100\ years} \cdot \tau_{Rk,cr}$$

Table C7.1: Essential characteristics of **tensile resistance** for **fischer internal threaded anchors RG MI** in hammer or diamond drilled holes; **uncracked or cracked concrete; service life time 50 years**

Internal threaded anchor RG MI				**M8**	**M10**	**M12**	**M16**	**M20**
Combined pullout and concrete cone failure								
Calculation diameter		d	[mm]	12	16	18	22	28
Uncracked concrete								
Characteristic bond resistance in uncracked concrete C20/25								
Hammer-drilling with standard drill bit or hollow drill bit (dry or wet concrete)								
Temperature range	I: 35 °C / 60 °C	$\tau_{Rk,ucr}$	[N/mm²]	15	14	14	13	12
	II: 50 °C / 72 °C			14	13	13	12	11
Hammer-drilling with standard drill bit or hollow drill bit (water filled hole)								
Temperature range	I: 35 °C / 60 °C	$\tau_{Rk,ucr}$	[N/mm²]	14	12	12	11	10
	II: 50 °C / 72 °C			13	12	11	10	9
Diamond-drilling (dry or wet concrete as well as water filled hole)								
Temperature range	I: 35 °C / 60 °C	$\tau_{Rk,ucr}$	[N/mm²]	13	12	11	10	9
	II: 50 °C / 72 °C			12	11	10	9	8
Installation factors								
Dry or wet concrete		γ_{inst}	[-]	1,0				
Water filled hole				1,4				
Cracked concrete								
Characteristic bond resistance in cracked concrete C20/25								
Hammer-drilling with standard drill bit or hollow drill bit and diamond-drilling (dry or wet concrete)								
Temperature range	I: 35 °C / 60 °C	$\tau_{Rk,cr}$	[N/mm²]	7	6	6	7	7
	II: 50 °C / 72 °C			7	6	6	7	7
Hammer-drilling with standard drill bit or hollow drill bit and diamond-drilling (water filled hole)								
Temperature range	I: 35 °C / 60 °C	$\tau_{Rk,cr}$	[N/mm²]	7	6,5	6	6	6
	II: 50 °C / 72 °C			7	6	6	6	6
Installation factors								
Dry or wet concrete		γ_{inst}	[-]	1,0				
Water filled hole				1,2			1,4	

Table C8.1: Essential characteristics of **tensile resistance** for **fischer internal threaded anchors RG MI** in hammer or diamond drilled holes; **uncracked or cracked concrete; service life time 100 years**

Internal threaded anchor RG MI				**M8**	**M10**	**M12**	**M16**	**M20**
Combined pullout and concrete cone failure								
Calculation diameter		d	[mm]	12	16	18	22	28
Uncracked concrete								
Characteristic bond resistance in uncracked concrete C20/25								
Hammer-drilling with standard drill bit or hollow drill bit (dry or wet concrete)								
Temperature range	I: 35 °C / 60 °C	$\tau_{Rk,ucr}$	[N/mm²]	15	14	14	13	12
	II: 50 °C / 72 °C			14	13	13	12	11
Diamond-drilling (dry or wet concrete)								
Temperature range	I: 35 °C / 60 °C	$\tau_{Rk,ucr}$	[N/mm²]	13	12	11	10	9
	II: 50 °C / 72 °C			12	11	10	9	8
Installation factors								
Dry or wet concrete		γ_{inst}	[-]	1,0				
Service life time 100 years	I: 35 °C / 60 °C	$\alpha_{100\ years}$	[-]	0,75	0,75	0,75	0,75	0,75
	II: 50 °C / 72 °C			0,55	0,60	0,60	0,65	0,65
Cracked concrete								
Characteristic bond resistance in cracked concrete C20/25								
Hammer-drilling with standard drill bit or hollow drill bit and diamond-drilling (dry or wet concrete)								
Temperature range	I: 35 °C / 60 °C	$\tau_{Rk,cr}$	[N/mm²]	7	6	6	7	7
	II: 50 °C / 72 °C			7	6	6	7	7
Installation factors								
Dry or wet concrete		γ_{inst}	[-]	1,0				
Service life time 100 years	I: 35 °C / 60 °C	$\alpha_{100\ years}$	[-]	0,60	0,85	0,80	0,65	0,65
	II: 50 °C / 72 °C			0,60	0,85	0,80	0,65	0,65

1) **Calculation of characteristic bond resistance in uncracked concrete $\tau_{Rk,100\ years,ucr}$:**

$$\tau_{Rk,100\ years,ucr} = \alpha_{100\ years} \cdot \tau_{Rk,ucr}$$

2) **Calculation of characteristic bond resistance in cracked concrete $\tau_{Rk,100\ years,cr}$:**

$$\tau_{Rk,100\ years,cr} = \alpha_{100\ years} \cdot \tau_{Rk,cr}$$

Table C9.1: Essential characteristics of **tensile resistance** for **reinforcing bars** in hammer or diamond drilled holes; **uncracked or cracked concrete; service life time 50 years**

Nominal diameter of the bar		**ϕ**	**8**	**10**	**12**	**14**	**16**	**18**	**20**	**22**	**24**	**25**	**26**	**28**	**30**	**32**	**34**	**36**	**40**
Combined pullout and concrete cone failure																			
Calculation diameter	d	[mm]	8	10	12	14	16	18	20	22	24	25	26	28	30	32	34	36	40
Uncracked concrete																			
Characteristic bond resistance in uncracked concrete C20/25																			
Hammer-drilling with standard drill bit or hollow drill bit (dry or wet concrete)																			
Temperature range I: 35 °C / 60 °C	$\tau_{Rk,ucr}$	[N/mm²]	16	15	15	14	14	13	13	13	12	12	12	12	12	12	11	11	11
Temperature range II: 50 °C / 72 °C	$\tau_{Rk,ucr}$	[N/mm²]	15	14	14	13	13	12	12	12	12	11	11	11	11	11	11	10	10
Hammer-drilling with standard drill bit or hollow drill bit (water filled hole)																			
Temperature range I: 35 °C / 60 °C	$\tau_{Rk,ucr}$	[N/mm²]	16	16	14	13	12	12	11	11	10	10	10	10	9	9	9	8	8
Temperature range II: 50 °C / 72 °C	$\tau_{Rk,ucr}$	[N/mm²]	15	14	13	12	12	11	11	10	10	9	9	9	9	8	8	8	8
Diamond-drilling (dry or wet concrete as well as water filled hole)																			
Temperature range I: 35 °C / 60 °C	$\tau_{Rk,ucr}$	[N/mm²]	16	15	13	12	12	11	10	10	10	9	9	9	9	8	8	8	7
Temperature range II: 50 °C / 72 °C	$\tau_{Rk,ucr}$	[N/mm²]	15	14	12	11	11	10	10	9	9	9	8	8	8	8	7	7	7
Installation factors																			
Dry or wet concrete	γ_{inst}	[-]	1,0																
Water filled hole	γ_{inst}	[-]	1,4																
Cracked concrete																			
Characteristic bond resistance in cracked concrete C20/25																			
Hammer-drilling with standard drill bit or hollow drill bit (dry or wet concrete)																			
Temperature range I: 35 °C / 60 °C	$\tau_{Rk,cr}$	[N/mm²]	7	7	8	8	8	8	8	8	8	8	8	8	8	8	8	8	8
Temperature range II: 50 °C / 72 °C	$\tau_{Rk,cr}$	[N/mm²]	7	7	8	8	8	8	8	8	8	8	8	8	8	8	8	8	8
Diamond-drilling (dry or wet concrete)																			
Temperature range I: 35 °C / 60 °C	$\tau_{Rk,cr}$	[N/mm²]	7	7	7	7	6	6	6	7	7	7	7	7	7	5	5	5	5
Temperature range II: 50 °C / 72 °C	$\tau_{Rk,cr}$	[N/mm²]	7	7	7	7	6	6	6	7	7	7	7	7	7	5	5	5	5
Hammer-drilling with standard drill bit or hollow drill bit and diamond-drilling (water filled hole)																			
Temperature range I: 35 °C / 60 °C	$\tau_{Rk,cr}$	[N/mm²]	6	7,5	6,5	6,5	6,5	6	6	6	6	6	6	6	6	5	5	5	5
Temperature range II: 50 °C / 72 °C	$\tau_{Rk,cr}$	[N/mm²]	6	6,5	6,5	6	6	6	6	6	6	6	6	6	6	5	5	5	5
Installation factors																			
Dry or wet concrete	γ_{inst}	[-]	1,0																
Water filled hole	γ_{inst}	[-]	1,2						1,4										

Table C10.1: Essential characteristics of **tensile resistance** for **reinforcing bars** in hammer or diamond drilled holes; **uncracked or cracked concrete; service life time 100 years**

Nominal diameter of the bar		**ϕ**	**8**	**10**	**12**	**14**	**16**	**18**	**20**	**22**	**24**	**25**	**26**	**28**	**30**	**32**	**34**	**36**	**40**
Combined pullout and concrete cone failure																			
Calculation diameter	d	[mm]	8	10	12	14	16	18	20	22	24	25	26	28	30	32	34	36	40
Uncracked concrete																			
Characteristic bond resistance in uncracked concrete C20/25																			
Hammer-drilling with standard drill bit or hollow drill bit (dry or wet concrete)																			
Temperature range I: 35 °C / 60 °C	$\tau_{Rk,ucr}$	[N/mm²]	16	15	15	14	14	13	13	13	12	12	12	12	12	12	11	11	11
Temperature range II: 50 °C / 72 °C	$\tau_{Rk,ucr}$	[N/mm²]	15	14	14	13	13	12	12	12	12	11	11	11	11	11	11	10	10
Diamond-drilling (dry or wet concrete)																			
Temperature range I: 35 °C / 60 °C	$\tau_{Rk,ucr}$	[N/mm²]	16	15	13	12	12	11	10	10	10	9	9	9	9	8	8	8	7
Temperature range II: 50 °C / 72 °C	$\tau_{Rk,ucr}$	[N/mm²]	15	14	12	11	11	10	10	9	9	9	8	8	8	8	7	7	7
Installation factors																			
Dry or wet concrete	γ_{inst}	[-]	1,0																
Service life time 100 years I: 35 °C / 60 °C	$\alpha_{100\ years}$	[-]	0,75	0,75	0,75	0,75	0,75	0,75	0,75	0,75	0,75	0,75	0,75	0,75	0,75	0,75	0,75	0,75	0,75
Service life time 100 years II: 50 °C / 72 °C	$\alpha_{100\ years}$	[-]	0,55	0,60	0,60	0,65	0,65	0,65	0,65	0,65	0,65	0,65	0,65	0,65	0,65	0,65	0,65	0,65	0,65
Cracked concrete																			
Characteristic bond resistance in cracked concrete C20/25																			
Hammer-drilling with standard drill bit or hollow drill bit (dry or wet concrete)																			
Temperature range I: 35 °C / 60 °C	$\tau_{Rk,cr}$	[N/mm²]	7	7	8	8	8	8	8	8	8	8	8	8	8	8	8	8	8
Temperature range II: 50 °C / 72 °C	$\tau_{Rk,cr}$	[N/mm²]	7	7	8	8	8	8	8	8	8	8	8	8	8	8	8	8	8
Diamond-drilling (dry or wet concrete)																			
Temperature range I: 35 °C / 60 °C	$\tau_{Rk,cr}$	[N/mm²]	7	7	7	7	6	6	6	7	7	7	7	7	7	5	5	5	5
Temperature range II: 50 °C / 72 °C	$\tau_{Rk,cr}$	[N/mm²]	7	7	7	7	6	6	6	7	7	7	7	7	7	5	5	5	5
Installation factors																			
Dry or wet concrete	γ_{inst}	[-]	1,0																
Service life time 100 years I: 35 °C / 60 °C	$\alpha_{100\ years}$	[-]	0,60	0,85	0,80	0,65	0,65	0,65	0,65	0,65	0,65	0,65	0,65	0,65	0,65	0,65	0,65	0,65	0,65
Service life time 100 years II: 50 °C / 72 °C	$\alpha_{100\ years}$	[-]	0,60	0,85	0,80	0,65	0,65	0,65	0,65	0,65	0,65	0,65	0,65	0,65	0,65	0,65	0,65	0,65	0,65

1) **Calculation of characteristic bond resistance in uncracked concrete $\tau_{Rk,100\ years,ucr}$:**

$$\tau_{Rk,100\ years,ucr} = \alpha_{100\ years} \cdot \tau_{Rk,ucr}$$

2) **Calculation of characteristic bond resistance in cracked concrete $\tau_{Rk,100\ years,cr}$:**

$$\tau_{Rk,100\ years,cr} = \alpha_{100\ years} \cdot \tau_{Rk,cr}$$

Table C11.1: Essential characteristics of **tensile resistance** for **fischer rebar anchors FRA** in hammer or diamond drilled holes; **uncracked or cracked concrete; service life time 50 years**

fischer rebar anchor FRA				**M12**	**M16**	**M20**	**M24**
Combined pullout and concrete cone failure							
Calculation diameter		d	[mm]	12	16	20	25
Uncracked concrete							
Characteristic bond resistance in uncracked concrete C20/25							
Hammer-drilling with standard drill bit or hollow drill bit (dry or wet concrete)							
Temperature range	I: 35 °C / 60 °C	$\tau_{Rk,ucr}$	[N/mm²]	15	14	13	12
	II: 50 °C / 72 °C			14	13	12	12
Hammer-drilling with standard drill bit or hollow drill bit (water filled hole)							
Temperature range	I: 35 °C / 60 °C	$\tau_{Rk,ucr}$	[N/mm²]	14	12	11	10
	II: 50 °C / 72 °C			13	12	11	9
Diamond-drilling (dry or wet concrete as well as water filled hole)							
Temperature range	I: 35 °C / 60 °C	$\tau_{Rk,ucr}$	[N/mm²]	13	12	10	9
	II: 50 °C / 72 °C			12	11	10	9
Installation factors							
Dry or wet concrete		γ_{inst}	[-]	1,0			
Water filled hole				1,4			
Cracked concrete							
Characteristic bond resistance in cracked concrete C20/25							
Hammer-drilling with standard drill bit or hollow drill bit and diamond-drilling (dry or wet concrete)							
Temperature range	I: 35 °C / 60 °C	$\tau_{Rk,cr}$	[N/mm²]	8	8	8	8
	II: 50 °C / 72 °C			8	8	8	8
Hammer-drilling with standard drill bit or hollow drill bit and diamond-drilling (water filled hole)							
Temperature range	I: 35 °C / 60 °C	$\tau_{Rk,cr}$	[N/mm²]	7	6	6	6
	II: 50 °C / 72 °C			7	6	6	6
Installation factors							
Dry or wet concrete		γ_{inst}	[-]	1,0			
Water filled hole				1,2		1,4	

Table C12.1: Essential characteristics of **tensile resistance** for **fischer rebar anchors FRA** in hammer or diamond drilled holes; **uncracked or cracked concrete; service life time 100 years**

fischer rebar anchor FRA				**M12**	**M16**	**M20**	**M24**
Combined pullout and concrete cone failure							
Calculation diameter		d	[mm]	12	16	20	25
Uncracked concrete							
Characteristic bond resistance in uncracked concrete C20/25							
Hammer-drilling with standard drill bit or hollow drill bit (dry or wet concrete)							
Temperature range	I: 35 °C / 60 °C	$\tau_{Rk,ucr}$	[N/mm²]	15	14	13	12
	II: 50 °C / 72 °C			14	13	12	12
Diamond-drilling (dry or wet concrete)							
Temperature range	I: 35 °C / 60 °C	$\tau_{Rk,ucr}$	[N/mm²]	13	12	10	9
	II: 50 °C / 72 °C			12	11	10	9
Installation factors							
Dry or wet concrete		γ_{inst}	[-]	1,0			
Service life time 100 years	I: 35 °C / 60 °C	$\alpha_{100\ years}$	[N/mm²]	0,75	0,75	0,75	0,75
	II: 50 °C / 72 °C			0,60	0,65	0,65	0,65
Cracked concrete							
Characteristic bond resistance in cracked concrete C20/25							
Hammer-drilling with standard drill bit or hollow drill bit and diamond-drilling (dry or wet concrete)							
Temperature range	I: 35 °C / 60 °C	$\tau_{Rk,cr}$	[N/mm²]	8	8	8	8
	II: 50 °C / 72 °C			8	8	8	8
Installation factors							
Dry or wet concrete		γ_{inst}	[-]	1,0			
Service life time 100 years	I: 35 °C / 60 °C	$\alpha_{100\ years}$	[-]	0,80	0,65	0,65	0,65
	II: 50 °C / 72 °C			0,80	0,65	0,65	0,65

1) **Calculation of characteristic bond resistance in uncracked concrete $\tau_{Rk,100\ years,ucr}$:**

$$\tau_{Rk,100\ years,ucr} = \alpha_{100\ years} \cdot \tau_{Rk,ucr}$$

2) **Calculation of characteristic bond resistance in cracked concrete $\tau_{Rk,100\ years,cr}$:**

$$\tau_{Rk,100\ years,cr} = \alpha_{100\ years} \cdot \tau_{Rk,cr}$$

Table C13.1: Displacements for **anchor rods**

Anchor rod		M8	M10	M12	M14	M16	M20	M22	M24	M27	M30
Displacement-Factors for tensile load[1)]											
Uncracked or cracked concrete; Temperature range I, II											
$\delta_{N0\text{-Factor}}$	[mm/(N/mm²)]	0,07	0,08	0,09	0,09	0,10	0,11	0,11	0,12	0,12	0,13
$\delta_{N\infty\text{-Factor}}$		0,11	0,12	0,13	0,14	0,15	0,16	0,17	0,18	0,19	0,19
Displacement-Factors for shear load[2)]											
Uncracked or cracked concrete; Temperature range I, II											
$\delta_{V0\text{-Factor}}$	[mm/kN]	0,18	0,15	0,12	0,10	0,09	0,07	0,07	0,06	0,05	0,05
$\delta_{V\infty\text{-Factor}}$		0,27	0,22	0,18	0,16	0,14	0,11	0,10	0,09	0,08	0,07

1) Calculation of effective displacement:

$\delta_{N0} = \delta_{N0\text{-Factor}} \cdot \tau_{Ed}$

$\delta_{N\infty} = \delta_{N\infty\text{-Factor}} \cdot \tau_{Ed}$

(τ_{Ed}: Design value of the applied tensile stress)

2) Calculation of effective displacement:

$\delta_{V0} = \delta_{V0\text{-Factor}} \cdot V_{Ed}$

$\delta_{V\infty} = \delta_{V\infty\text{-Factor}} \cdot V_{Ed}$

(V_{Ed}: Design value of the applied shear force)

Table C13.2: Displacements for **fischer internal threaded anchors RG MI**

Internal threaded anchor RG MI		M8	M10	M12	M16	M20
Displacement-Factors for tensile load[1)]						
Uncracked or cracked concrete; Temperature range I, II						
$\delta_{N0\text{-Factor}}$	[mm/(N/mm²)]	0,09	0,10	0,10	0,11	0,13
$\delta_{N\infty\text{-Factor}}$		0,13	0,15	0,16	0,17	0,19
Displacement-Factors for shear load[2)]						
Uncracked or cracked concrete; Temperature range I, II						
$\delta_{V0\text{-Factor}}$	[mm/kN]	0,12	0,09	0,08	0,07	0,05
$\delta_{V\infty\text{-Factor}}$		0,18	0,14	0,12	0,10	0,08

1) Calculation of effective displacement:

$\delta_{N0} = \delta_{N0\text{-Factor}} \cdot \tau_{Ed}$

$\delta_{N\infty} = \delta_{N\infty\text{-Factor}} \cdot \tau_{Ed}$

(τ_{Ed}: Design value of the applied tensile stress)

2) Calculation of effective displacement:

$\delta_{V0} = \delta_{V0\text{-Factor}} \cdot V_{Ed}$

$\delta_{V\infty} = \delta_{V\infty\text{-Factor}} \cdot V_{Ed}$

(V_{Ed}: Design value of the applied shear force)

Table C14.1: Displacements for **reinforcing bars**

Nominal diameter of the bar	ϕ	8	10	12	14	16	18	20	22	24	25	26	28	30	32	34	36	40
Displacement-Factors for tensile load[1)]																		
Uncracked or cracked concrete; Temperature range I, II																		
$\delta_{N0\text{-Factor}}$	[mm/(N/mm²)]	0,07	0,08	0,09	0,09	0,10	0,10	0,11	0,11	0,12	0,12	0,12	0,13	0,13	0,13	0,14	0,14	0,15
$\delta_{N\infty\text{-Factor}}$		0,11	0,12	0,13	0,14	0,15	0,16	0,16	0,17	0,18	0,18	0,18	0,19	0,19	0,20	0,20	0,21	0,22
Displacement-Factors for shear load[2)]																		
Uncracked or cracked concrete; Temperature range I, II																		
$\delta_{V0\text{-Factor}}$	[mm/kN]	0,18	0,15	0,12	0,10	0,09	0,08	0,07	0,07	0,06	0,06	0,06	0,05	0,05	0,05	0,04	0,04	0,04
$\delta_{V\infty\text{-Factor}}$		0,27	0,22	0,18	0,16	0,14	0,12	0,11	0,10	0,09	0,09	0,08	0,08	0,07	0,07	0,06	0,06	0,05

1) Calculation of effective displacement:

$\delta_{N0} = \delta_{N0\text{-Factor}} \cdot \tau_{Ed}$

$\delta_{N\infty} = \delta_{N\infty\text{-Factor}} \cdot \tau_{Ed}$

(τ_{Ed}: Design value of the applied tensile stress)

2) Calculation of effective displacement:

$\delta_{V0} = \delta_{V0\text{-Factor}} \cdot V_{Ed}$

$\delta_{V\infty} = \delta_{V\infty\text{-Factor}} \cdot V_{Ed}$

(V_{Ed}: Design value of the applied shear force)

Table C14.2: Displacements for **fischer rebar anchors FRA**

fischer rebar anchor FRA		M12	M16	M20	M24
Displacement-Factors for tensile load[1)]					
Uncracked or cracked concrete; Temperature range I, II					
$\delta_{N0\text{-Factor}}$	[mm/(N/mm²)]	0,09	0,10	0,11	0,12
$\delta_{N\infty\text{-Factor}}$		0,13	0,15	0,16	0,18
Displacement-Factors for shear load[2)]					
Uncracked or cracked concrete; Temperature range I, II					
$\delta_{V0\text{-Factor}}$	[mm/kN]	0,12	0,09	0,07	0,06
$\delta_{V\infty\text{-Factor}}$		0,18	0,14	0,11	0,09

1) Calculation of effective displacement:

$\delta_{N0} = \delta_{N0\text{-Factor}} \cdot \tau_{Ed}$

$\delta_{N\infty} = \delta_{N\infty\text{-Factor}} \cdot \tau_{Ed}$

(τ_{Ed}: Design value of the applied tensile stress)

2) Calculation of effective displacement:

$\delta_{V0} = \delta_{V0\text{-Factor}} \cdot V_{Ed}$

$\delta_{V\infty} = \delta_{V\infty\text{-Factor}} \cdot V_{Ed}$

(V_{Ed}: Design value of the applied shear force)

Table C15.1: Essential characteristics[2)] for the **steel bearing capacity** under tensile / shear load of **fischer anchor rods** and **standard threaded rods** under seismic action performance category **C1 or C2**

Anchor rod / standard threaded rod				M10	M12	M14	M16	M20	M22	M24	M27	M30
Bearing capacity under tensile load, steel failure[1)]												
fischer anchor rods and standard threaded rods, performance category C1												
Characterstic resistance $N_{Rk,s,eq,C1}$	Steel zinc plated	Property class	5.8	[kN]	29(27)	43	58	79	123	152	177	230	281
			8.8		47(43)	68	92	126	196	243	282	368	449
	Stainless steel A4 and high corrosion resistant steel C		50		29	43	58	79	123	152	177	230	281
			70		41	59	81	110	172	212	247	322	393
			80		47	68	92	126	196	243	282	368	449
fischer anchor rods and standard threaded rods, performance category C2												
Characterstic resistance $N_{Rk,s,eq,C2}$	Steel zinc plated	Property class	5.8	[-]	-	39	-	72	108	-	177	-	-
			8.8		-	61	-	116	173	-	282	-	-
	Stainless steel A4 and high corrosion resistant steel C		50		-	39	-	72	108	-	177	-	-
			70		-	53	-	101	152	-	247	-	-
			80		-	61	-	116	173	-	282	-	-
Bearing capacity under shear load, steel failure without lever arm[1)]												
fischer anchor rods, performance category C1												
Characterstic resistance $V^0_{Rk,s,eq,C1}$	Steel zinc plated	Property class	5.8	[kN]	15(13)	21	29	39	61	76	89	115	141
			8.8		23(21)	34	46	63	98	122	141	184	225
	Stainless steel A4 and high corrosion resistant steel C		50		15	21	29	39	61	76	89	115	141
			70		20	30	40	55	86	107	124	161	197
			80		23	34	46	63	98	122	141	184	225
Standard threaded rods, performance category C1												
Characterstic resistance $V^0_{Rk,s,eq,C1}$	Steel zinc plated	Property class	5.8	[kN]	11(9)	15	20	27	43	53	62	81	99
			8.8		16(14)	24	32	44	69	85	99	129	158
	Stainless steel A4 and high corrosion resistant steel C		50		11	15	20	27	43	53	62	81	99
			70		14	21	28	39	60	75	87	113	138
			80		16	24	32	44	69	85	99	129	158
fischer anchor rods and standard threaded rods, performance category C2												
Characterstic resistance $V^0_{Rk,s,eq,C2}$	Steel zinc plated	Property class	5.8	[-]	-	14	-	27	43	-	62	-	-
			8.8		-	22	-	44	69	-	99	-	-
	Stainless steel A4 and high corrosion resistant steel C		50		-	14	-	27	43	-	62	-	-
			70		-	20	-	39	60	-	87	-	-
			80		-	22	-	44	69	-	99	-	-

[1)] Partial factors for performance category C1 or C2 see table C16.2;
for fischer anchor rods FIS A / RGM the factor for steel ductility is 1,0

[2)] Values in brackets are valid for undersized threaded rods with smaller stress area A_s for hot dip galvanized standard threaded rods according to EN ISO 10684:2004+AC:2009.

Table C16.1: Essential characteristics for the **steel bearing capacity** under tensile / shear load of **reinforcing bars (B500B)** under seismic action performance category **C1**

Nominal diameter of the bar		**ϕ**	**10**	**12**	**14**	**16**	**18**	**20**	**22**	**24**	**25**	**26**	**28**	**30**	**32**
Bearing capacity under tensile load, steel failure[1)]															
Reinforcing bar B500B acc. to DIN 488-2:2009-08, performance category C1															
Characterstic resistance	$N_{Rk,s,eq,C1}$	[kN]	44	63	85	111	140	173	209	249	270	292	339	389	443
Bearing capacity under shear load, steel failure without lever arm[1)]															
Reinforcing bar B500B acc. to DIN 488-2:2009-08, performance category C1															
Characterstic resistance	$V^0_{Rk,s,eq,C1}$	[kN]	15	22	30	39	49	61	74	88	95	102	119	137	155

[1)] Partial factors for performance category C1 see table C16.2

Table C16.2: **Partial factors** for **fischer anchor rods, standard threaded rods** and **reinforcing bars (B500B)** under seismic action performance category **C1 or C2**

Anchor rod / standard threaded rod				**M10**	**M12**	**M14**	**M16**	**M20**	**M22**	**M24**	**M27**	**M30**
Nominal diameter of the bar			**ϕ**	**10**	**12**	**14**	**16**	**18**	**20**	**22**	**24**	**25**	**26**	**28**	**30**	**32**
Tensile load, steel failure[1)]																
Partial factor $\gamma_{Ms,N}$	Steel zinc plated	Property class	5.8	[-]	1,50											
			8.8		1,50											
	Stainless steel A4 and high corrosion resistant steel C		50		2,86											
			70		1,50[2)] / 1,87											
			80		1,60											
	Reinforcing bar		B500B		1,40											
Shear load, steel failure[1)]																
Partial factor $\gamma_{Ms,V}$	Steel zinc plated	Property class	5.8	[-]	1,25											
			8.8		1,25											
	Stainless steel A4 and high corrosion resistant steel C		50		2,38											
			70		1,25[2)] / 1,56											
			80		1,33											
	Reinforcing bar		B500B		1,50											

[1)] In absence of other national regulations
[2)] Only admissible for high corrosion resistant steel C, with f_{yk} / f_{uk} ≥ 0,8 and A_5 > 12 % (e.g. fischer anchor rods)

Table C17.1: Essential characteristics of **resistance** for **fischer anchor rods** and **standard threaded rods** in hammer drilled holes under seismic action performance category **C1; service life time 50 and 100 years**

Anchor rod / standard threaded rod				**M10**	**M12**	**M14**	**M16**	**M20**	**M22**	**M24**	**M27**	**M30**
Characteristic bond resistance, combined pullout and concrete cone failure												
Hammer-drilling with standard drill bit or hollow drill bit (dry or wet concrete)												
Temperature range	I: 35 °C / 60 °C	$\tau_{Rk,eq,C1}$	[N/mm²]	7,0	7,0	6,7	6,0	5,7	6,7	6,7	6,7	6,7
	II: 50 °C / 72 °C			7,0	7,0	6,7	5,7	5,7	6,7	6,7	6,7	6,7
Hammer-drilling with standard drill bit or hollow drill bit (water filled hole)												
Temperature range	I: 35 °C / 60 °C	$\tau_{Rk,eq,C1}$	[N/mm²]	7,5	7,5	6,5	5,7	5,7	5,7	5,7	5,7	5,7
	II: 50 °C / 72 °C			6,8	6,8	6,5	5,7	5,7	5,7	5,7	5,7	5,7
Installation factors												
tensile load												
Dry or wet concrete		γ_{inst}	[-]	1,0								
Water filled hole				1,2				1,4				
shear load												
All installation conditions		γ_{inst}	[-]	1,0								

Table C17.2: Essential characteristics of **resistance** for **reinforcing bars** in hammer drilled holes under seismic action performance category **C1; service life time 50 and 100 years**

Nominal diameter of the bar			**ϕ**	**10**	**12**	**14**	**16**	**18**	**20**	**22**	**24**	**25**	**26**	**28**	**30**	**32**
Characteristic bond resistance, combined pullout and concrete cone failure																
Hammer-drilling with standard drill bit or hollow drill bit (dry or wet concrete)																
Temperature range	I: 35 °C / 60 °C	$\tau_{Rk,eq,C1}$	[N/mm²]	7,0	7,0	6,7	5,7	5,7	5,7	6,7	6,7	6,7	6,7	6,7	6,7	4,8
	II: 50 °C / 72 °C			7,0	7,0	6,7	5,7	5,7	5,7	6,7	6,7	6,7	6,7	6,7	6,7	4,8
Hammer-drilling with standard drill bit or hollow drill bit (water filled hole)																
Temperature range	I: 35 °C / 60 °C	$\tau_{Rk,eq,C1}$	[N/mm²]	7,5	6,5	6,5	5,7	5,7	5,7	5,7	5,7	5,7	5,7	5,7	5,7	4,8
	II: 50 °C / 72 °C			6,5	6,5	5,8	5,8	5,7	5,7	5,7	5,7	5,7	5,7	5,7	5,7	4,8
Installation factors																
Tensile load																
Dry or wet concrete		γ_{inst}	[-]	1,0												
Water filled hole				1,2					1,4							
Shear load																
All installation conditions		γ_{inst}	[-]	1,0												

Table C18.1: Essential characteristics of **resistance** for **fischer anchor rods** and **standard threaded rods** in hammer drilled holes under seismic action performance category **C2; service life time 50 and 100 years**

Anchor rod / standard threaded rod				**M12**	**M16**	**M20**	**M24**
Characteristic bond resistance, combined pullout and concrete cone failure							
Hammer-drilling with standard drill bit or hollow drill bit (dry or wet concrete)							
Temperature range	I: 35 °C / 60 °C	$\tau_{Rk,eq,C2}$	[N/mm²]	3,5	5,8	5,0	3,1
	II: 50 °C / 72 °C			3,3	5,5	4,7	2,9
Hammer-drilling with standard drill bit or hollow drill bit (water filled hole)							
Temperature range	I: 35 °C / 60 °C	$\tau_{Rk,eq,C2}$	[N/mm²]	3,5	5,8	5,0	3,1
	II: 50 °C / 72 °C			3,3	5,5	4,7	2,9
Installation factors							
Tensile load							
Dry or wet concrete		γ_{inst}	[-]	1,0			
Water filled hole				1,2		1,4	
Shear load							
All installation conditions		γ_{inst}	[-]	1,0			
Displacement-Factors for tensile load[1)]							
$\delta_{N,(DLS)\text{-Factor}}$		[mm/(N/mm²)]		0,09	0,10	0,11	0,12
$\delta_{N,(ULS)\text{-Factor}}$				0,15	0,17	0,17	0,18
Displacement-Factors for shear load[2)]							
$\delta_{V,(DLS)\text{-Factor}}$		[mm/kN]		0,18	0,10	0,07	0,06
$\delta_{V,(ULS)\text{-Factor}}$				0,25	0,14	0,11	0,09

1) Calculation of effective displacement:

$\delta_{N,(DLS)} = \delta_{N,(DLS)\text{-Factor}} \cdot \tau_{Ed}$

$\delta_{N,(ULS)} = \delta_{N,(ULS)\text{-Factor}} \cdot \tau_{Ed}$

(τ_{Ed}: Design value of the applied tensile stress)

2) Calculation of effective displacement:

$\delta_{V,(DLS)} = \delta_{V,(DLS)\text{-Factor}} \cdot V_{Ed}$

$\delta_{V,(ULS)} = \delta_{V,(ULS)\text{-Factor}} \cdot V_{Ed}$

(V_{Ed}: Design value of the applied shear force)