DEKLARACJA WŁAŚCIWOŚCI UŻYTKOWYCH

DoP 0228

dla szyn kotwiących fischer FES ze śrubami do szyn fischer FBC (szyna kotwiąca do zabetonowania) PL

1. Niepowtarzalny kod identyfikacyjny typu wyrobu: **DoP 0228**

2. Zamierzone zastosowanie: **Szyna kotwiąca do stosowania w betonie niezarysowanym i zarysowanym. Zobacz załącznik, w szczególności aneksy B1- B8**

3. Producent: **fischerwerke GmbH & Co. KG, Klaus-Fischer-Str. 1, 72178 Waldachtal, Niemcy**

4. Upoważniony przedstawiciel: **–**

5. System(-y) oceny i weryfikacji stałości właściwości użytkowych: **1**

6. Europejski dokument oceny: **EAD 330008-03-0601**
   Europejska ocena techniczna: **ETA-18/0862; 2020-06-16**
   Jednostka ds. oceny technicznej: **DIBt- Deutsches Institut für Bautechnik**
   Jednostka lub jednostki notyfikowane: **1343 MPA Darmstadt / 2873 TU Darmstadt**

7. Deklarowane właściwości użytkowe:

Wytrzymałość mechaniczna i stabilność osadzenia (BWR 1)

Nośność charakterystyczna na wyrywanie (nośności statyczne i quasi-statyczne):	Nośność do uszkodzenia stali szyny:	Aneksy C1
	Nośność do zniszczenie połączenia pomiędzy szyną a kotwą:	Aneksy C1
	Nośność do zniszczenia uchwytów szyny i wyrwania śruby:	Aneksy C1
	Nośność do zerwania śruby:	Aneksy C5
	Nośność na zniszczenie stali poprzez przekroczenie wytrzymałości na zginanie szyny	Aneksy C1
	Maksymalny moment dokręcania podczas instalacji, aby uniknąć uszkodzeń:	Aneksy B4
	Nośność na wyrywanie kotwy:	Aneksy C2
	Nośność do wyrwania stożka betonu:	Aneksy B3, C2
	Minimalna odległość od krawędzi, rozstaw, grubość elementu, aby zapobiec pękaniu betonu podczas montażu:	Aneksy B3
	Odległość od krawędzi zapobiegająca pękaniu pod obciążeniem:	Aneksy C2
	Nośność na pęknięcie części nośnej szyny	Aneksy A4
Nośność charakterystyczna na ścinanie (nośności statyczne i quasi-statyczne):	Odporność na zniszczenie stali śruby pod obciążeniem ścinającym bez ramienia dźwigni:	Aneksy C5
	Odporność na zniszczenie stali przez zginanie śruby pod obciążeniem ścinającym z ramieniem dźwigni	Aneksy C6
	Nośność na zniszczenie krawędzi szyny, zniszczenie połączenia kotwy z szyną lub zniszczenie stali szyny kotwiącej (obciążenie ścinające w kierunku poprzecznym):	Aneksy C3
	Nośność na zniszczenie stali przy połączeniu szyny a śrubą (obciążenie ścinające w osi podłużnej szyny)	Aneksy C3
	Współczynnik wrażliwości instalacji:	NPD
	Nośność na zniszczenie stali kotwy:	Aneksy C3
	Nośność na zniszczenie stali połączenia kotwy z szyną:	Aneksy C3
	Nośność do uszkodzenia wyważenia:	Aneksy C4
	Nośność do zniszczenieakrawędzi betonu:	Aneksy C4
	Nośność na zniszczenie stali szyny kotwiącej:	Aneksy C4
	Trwałość:	Aneksy A4, B1
	Przemieszczenia:	Aneksy C2, C4
Nośność charakterystyczna pod obciążeniem zmęczeniowym:	NPD	

Ochrona przeciwpożarowa (BWR 2)

Reakcja na ogień:	Klasy (A1)
Odporność na działanie ognia:	NPD

8. Odpowiednia dokumentacja techniczna lub specjalna dokumentacja techniczna: -

Właściwości użytkowe określonego powyżej wyrobu są zgodne z zestawem deklarowanych właściwości użytkowych. Niniejsza deklaracja właściwości użytkowych wydana zostaje zgodnie z rozporządzeniem (UE) nr 305/2011 na wyłączną odpowiedzialność producenta określonego powyżej.

W imieniu producenta podpisał(-a):

ppa.

i.V. P. S

Thilo Pregartner, Dr.-Ing.

Peter Schillinger, Dipl.-Ing.

Tumlingen, 2020-06-30

Niniejsza Deklaracja Właściwości Użytkowych została przygotowana w różnych językach. W razie wątpliwości w interpretacji, wersja angielska jest zawsze miarodajna.

Załącznik zawiera dobrowolne i uzupełniające informacje w języku angielskim (neutralne językowo), a wykraczające poza wymagania prawne.

Specific Part

1 Technical description of the product

The fischer Anchor Channel FES with fischer Channel Bolts FBC is a system consisting of a C-shaped channel profile of steel and at least two metal anchors non-detachably fixed on the channel back and fischer Channel Bolts.

The anchor channel is embedded surface-flush in the concrete. fischer Channel Bolts with appropriate hexagonal nuts and washers are fixed to the channel.

The product description is given in Annex A.

2 Specification of the intended use in accordance with the applicable European Assessment Document

The performances given in Section 3 are only valid if the anchor channel is used in compliance with the specifications and conditions given in Annex B.

The verifications and assessment methods on which this European Technical Assessment is based lead to the assumption of a working life of the anchor channel of at least 50 years. The indications given on the working life cannot be interpreted as a guarantee given by the producer, but are to be regarded only as a means for choosing the right products in relation to the expected economically reasonable working life of the works.

3 Performance of the product and references to the methods used for its assessment

3.1 Mechanical resistance and stability (BWR 1)

Essential characteristic	Performance
Characteristic resistance under tension loading (static and quasi-static loading)	See Annex A4 and A5, Annex B3 and B4, Annex C1, C2 and C5
Characteristic resistance under shear loading (static and quasi-static loading)	See Annex C3 to C6
Characteristic resistance under combined tension and shear loading (static and quasi-static loading)	See Annex C4
Characteristic resistances under fatigue tension loading	No performance assessed
Displacements (static and quasi-static loading)	See Annex C2 and C4
Durability	See Annex B1

3.2 Safety in case of fire (BWR 2)

Essential characteristic	Performance
Reaction to fire	Class A1
Characteristic resistance to fire	No performance assessed

4 Assessment and verification of constancy of performance (AVCP) system applied, with reference to its legal base

In accordance with EAD No. 330008-03-0601, the applicable European legal act is: [2000/273/EC].

The system to be applied is: 1

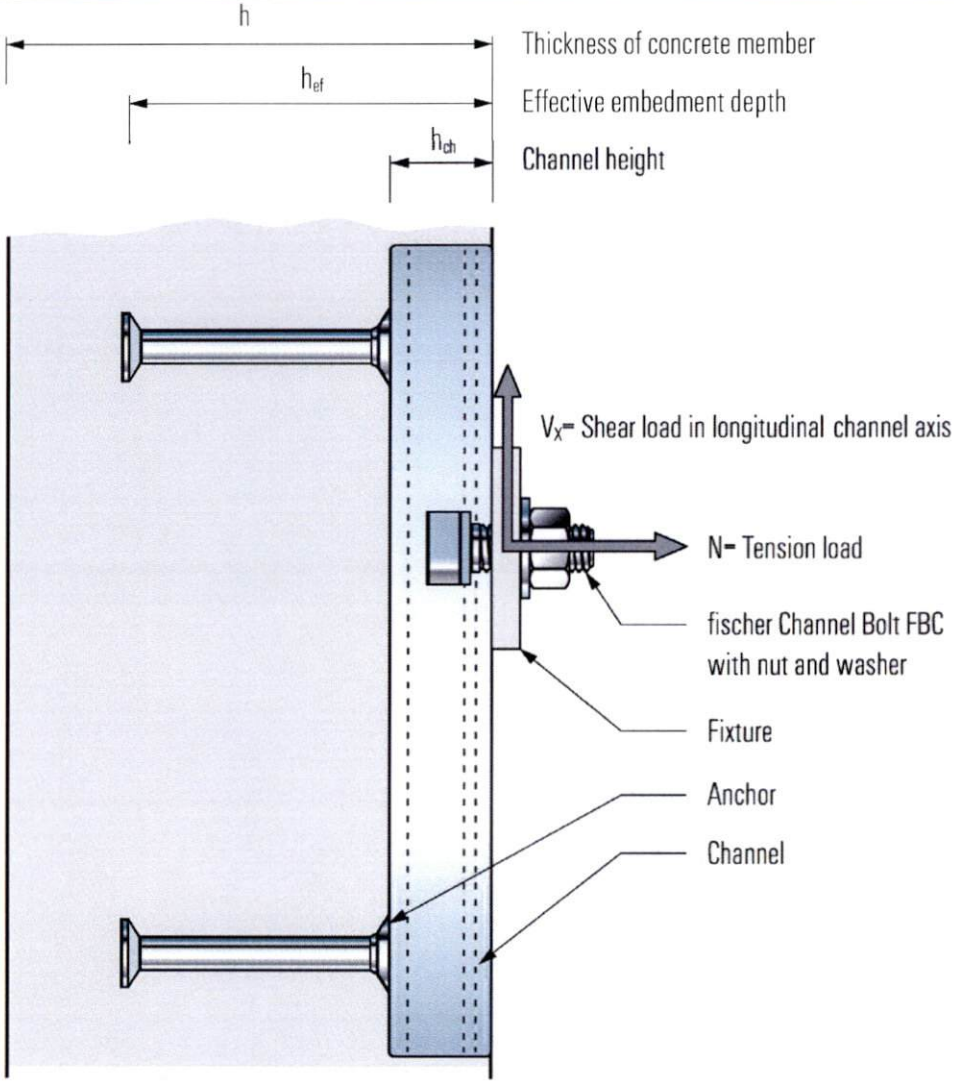

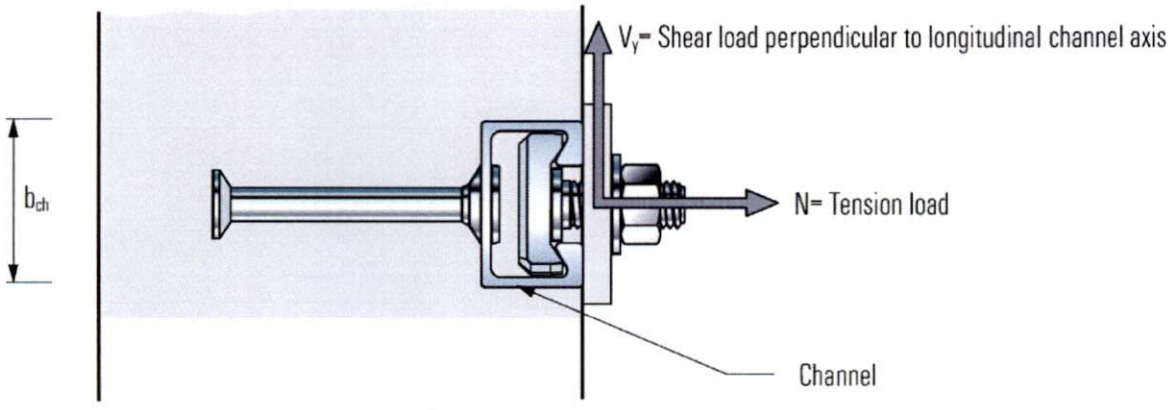

fischer Anchor Channel FES with fischer Channel Bolts FBC

Product Description
Installed condition

Annex A1

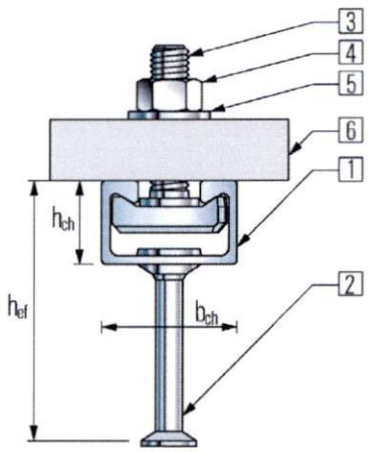

Round anchor

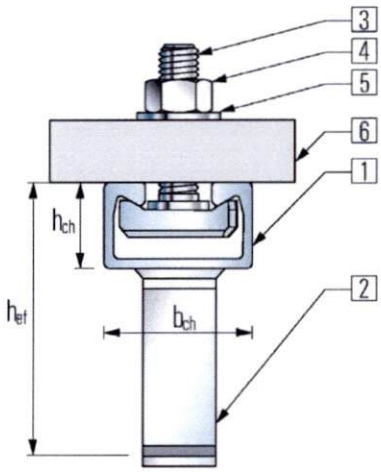

I-anchor

fischer Anchor Channel FES
1 Channel profile
2 Anchor
3 Channel bolt
4 Hexagonal nut
5 Washer
6 Fixture

Marking of the fischer anchor channel FES:

e. g.: I-50/30

= Identifying mark of the manufacturer

I = Additional marking for I-anchors
No marking for round anchors

50/30 = Anchor channel size
(29/20; 38/23; 40/22; 50/30; 52/34, 28/15; 38/17; 40/25; 49/30; 54/33)

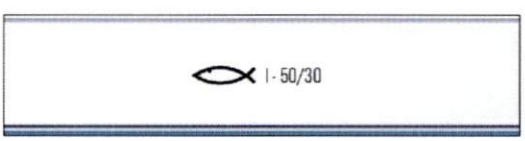

Stamped into back of channel
Optional: printed on channel web or channel lips
H = Hot rolled channel, C = Cold formed channel
No marking for material acc. A7 Table 6 (Channel profile)

Marking of the fischer channel bolt FBC:

e. g.: 5030 8.8

= Identifying mark of the manufacturer

5030 = Type of channel bolt

8.8 = Steel grade

N = Notching channel bolt (if applicable)

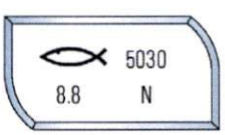

Marking of channel bolt type (smooth, serrated, notching head) according to Annex A6

fischer Anchor Channel FES with fischer Channel Bolts FBC

Product Description
Marking and materials

Annex A2

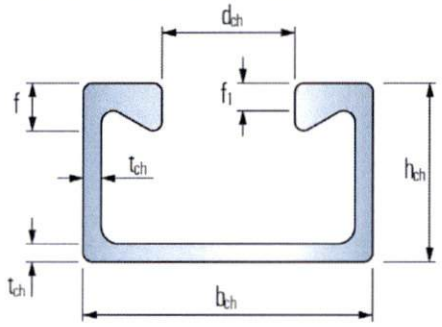

FES-H-(I-)40/22, -50/30, -52/34

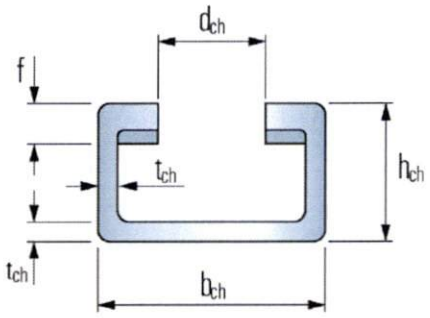

FES-H-S-29/20, -38/23 (serrated)

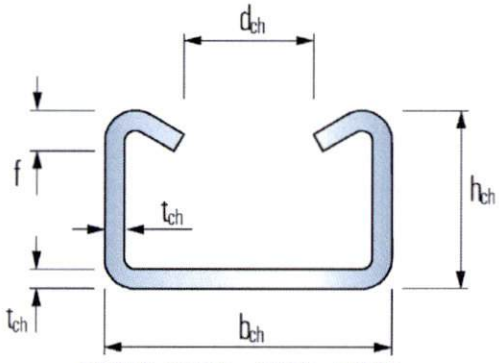

FES-C-40/25, -49/30, -54/33

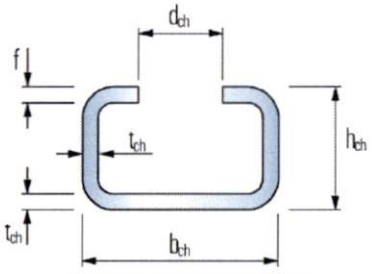

FES-C-28/15, -38/17

Table 1: Dimensions of hot-rolled and cold-formed channel profile

Anchor Channel FES-	b_{ch} [mm]	h_{ch} [mm]	t_{ch} [mm]	d_{ch} [mm]	f [mm]	f_1 [mm]	I_y [mm⁴]
C-28/15	28,0	15,5	2,3	12,0	2,3	-	4280
C-38/17	38,0	17,3	3,0	18,0	3,0	-	8240
C-40/25	40,0	25,0	2,8	18,0	6,0	-	20340
C-49/30	50,0	30,0	3,3	22,0	7,0	-	43080
C-54/33	54,0	33,0	5,0	22,0	8,5	-	74090
H-S-29/20	30,0	20,0	3,0	14,0	5,2	-	11150
H-S-38/23	38,0	23,0	3,3	18,0	6,0	-	21070
H-(I-)40/22	40,0	23,5	2,6	18,0	6,2	3,6	21660
H-(I-)50/30	50,0	30,0	3,0	22,5	8,1	5,5	54960
H-(I-)52/34	52,5	34,0	4,0	22,5	11,5	8,3	96330

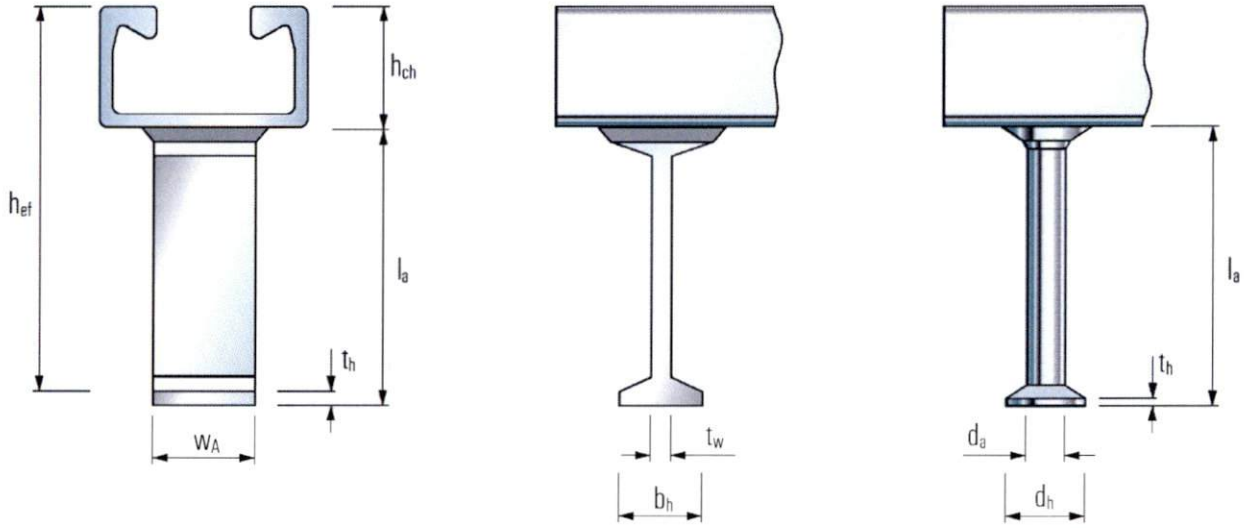

Table 2: Dimensions of anchor (welded I-anchor or forged round anchor)

Anchor Channel FES -	I-anchor						Round anchor				
	$l_{a,min}$ [mm]	$t_{w,min}$ [mm]	$b_{h,min}$ [mm]	t_h [mm]	w_A [mm]	$A_{h,min}$ [mm²]	$l_{a,min}$ [mm]	d_a [mm]	d_h [mm]	t_h [mm]	A_h [mm²]
C-28/15	-	-	-	-	-	-	31,0	6	12,0	1,3	85
C-38/17	-	-	-	-	-	-	60,8	8	16,0	2,0	151
C-40/25	-	-	-	-	-	-	56,0	8	16,0	2,0	151
C-49/30	-	-	-	-	-	-	66,0	10	20,0	2,2	236
C-54/33	-	-	-	-	-	-	124,5	11	24,3	2,5	369
H-S-29/20	-	-	-	-	-	-	59,5	10	20,0	2,5	236
H-S-38/23	-	-	-	-	-	-	76,2	10	20,0	2,2	236
H-(I-)40/22	62	5	20	5	20	300	68,5	8	16,0	2,0	151
H-(I-)50/30	69	5	20	5	25	375	66,2	10	20,0	2,2	236
H-(I-)52/34	126	5 [1)]	20 [1)]	5	40	600	123,5	11	24,3	2,5	369

[1)] Alternative I-anchor: t_w = 6 mm, b_h = 25 mm

Table 3: Dimensions of Anchor Channels FES-

Anchor channel FES-	Anchor type	s_{min} [mm]	s_{max} [mm]	x_{min} [mm]	x_{max} [mm]	l_{min} [mm]	l_{max} [mm]
C-28/15	round	100	200	25	35	150	6.070
C-38/17							
C-40/25			250				
C-49/30							
C-54/33							
H-S-29/20			200				
H-S-38/23			250				
H-(I-)40/22	round or I						
H-(I-)50/30	round or I						
H-I-52/34	I						
H-52/34	round			35		170	

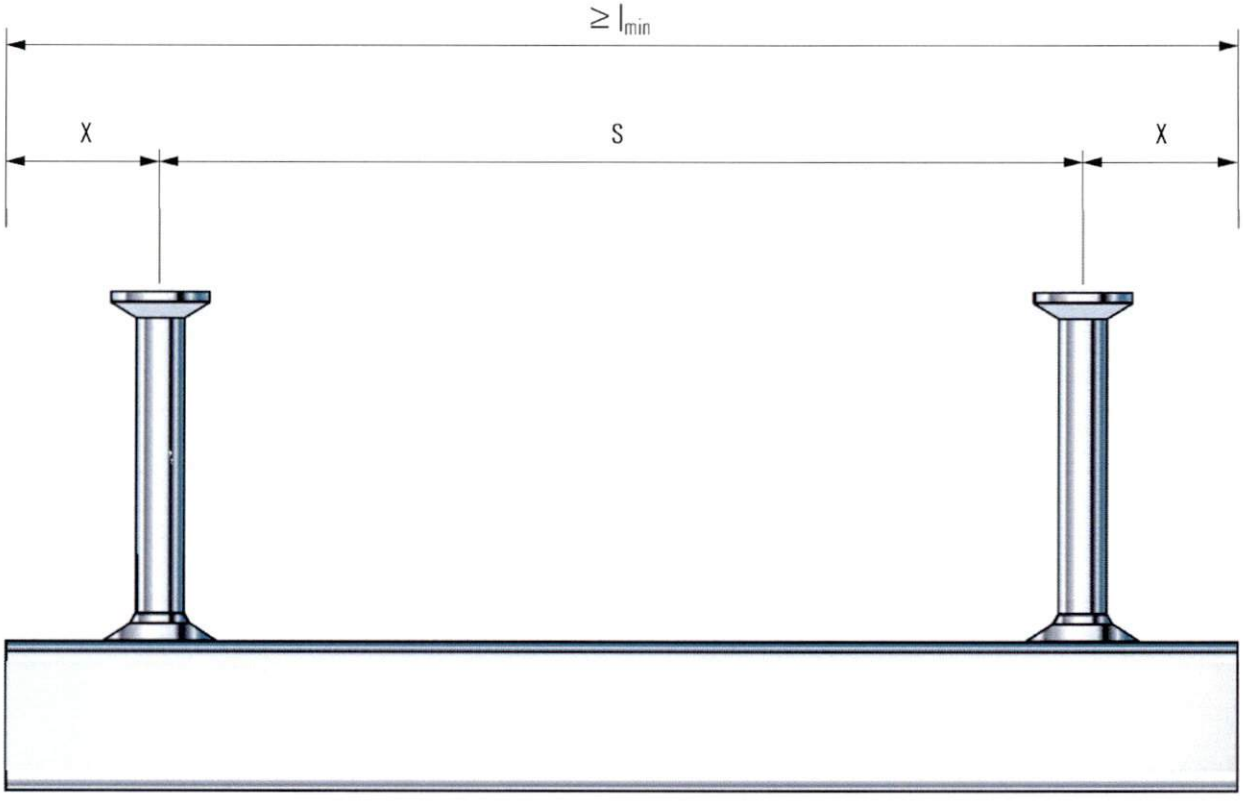

fischer Anchor Channel FES with fischer Channel Bolts FBC

Product Description
Anchor position and channel length

Annex A5

Table 4: Steel grade and corrosion class

Channel Bolt	Carbon steel [1]
Steel grade	8.8
f_{uk} [N/mm²]	800 / 830
f_{yk} [N/mm²]	640 / 660 [2]
Corrosion protection	G [3] F [4]

[1] Material properties according to Annex A7
[2] Material properties according to EN ISO 898-1
[3] Electroplated
[4] Hot-dip galvanized

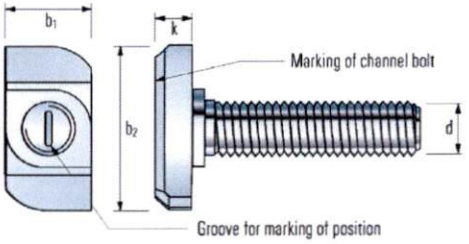

Channel Bolt FBC-28/15, FBC-38/17

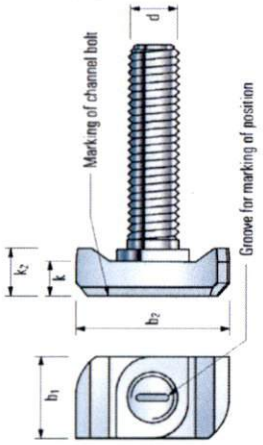

Channel Bolt
FBC-40/22, FBC-50/30

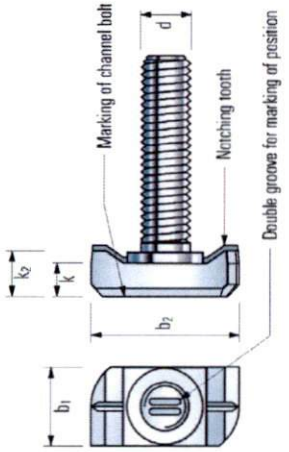

Notching Channel Bolt
FBC-N-50/30-M20

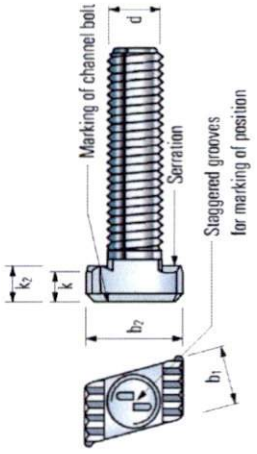

Serrated Channel Bolt
FBC-S-29/20, FBC-S-38/23

Table 5: Dimensions of fischer Channel Bolts FBC and matching fischer Anchor Channels FES

Anchor Channel FES-	Channel Bolt FBC-	Dimensions				
		Thread d	b1 [mm]	b2 [mm]	k [mm]	k2 [mm]
C-28/15	28/15	M8	11	22,2	5	-
		M10			5	-
		M12			7	-
C-38/17	38/17	M10	16	30	6	-
		M12			7	-
H-S-29/20	S-29/20	M12	13	22	6,5	8
H-S-38/23 C-38/17	S-38/23	M12	16,7	29,1	5,8	7,3
		M16				
H(-I)-40/22 C-40/25	40/22	M10	14	32,5	8	11
		M12	14			
		M16	17			
C-49/30 H(-I)-50/30 C-54/33 H(-I)-52/34	50/30	M10	17,1	40,5	9	11,5
		M12	17,1		10	12,5
		M16	17,1		11	13,5
		M20	20,5		12	14,5
H(-I)-50/30 H(-I)-52/34	N-50/30	M20	21	40,5	12	16

Table 6: Materials and properties

Component	Steel		
	Mechanical properties	Coating	Coating
1	2a	2b	2c
Channel profile	1.0038, 1.0044 acc. to EN 10025:2004 1.0976, 1.0979 acc. to EN 10149:2013	Hot dip galvanized ≥ 50 µm acc. to EN ISO 10684:2004 + AC:2009	Hot dip galvanized ≥ 50 µm acc. to EN ISO 10684:2004 + AC:2009
Anchor	1.0038, 1.0213, 1.0214 acc. to EN 10025:2004 1.5525, 1.5535 acc. to EN 10263:2017 1.5523	Hot dip galvanized ≥ 50 µm acc. to EN ISO 10684:2004 + AC:2009	Hot dip galvanized ≥ 50 µm acc. to EN ISO 10684:2004 + AC:2009
Channel bolt	Steel grade 8.8 acc. to EN ISO 898-1:2013	Electroplated acc. to EN ISO 4042:2018	Hot dip galvanized ≥ 50 µm acc. to EN ISO 10684:2004 + AC:2009
Plain washer [1] acc. to EN ISO 7089:2000 and EN ISO 7093-1:2000	Hardness class A ≥ 200 HV	Electroplated acc. to EN ISO 4042:2018	Hot dip galvanized ≥ 50 µm acc. to EN ISO 10684:2004 + AC:2009
Hexagonal nut acc. to EN ISO 4032:2012	Property class 5 or 8 acc. to EN ISO 898-2:2012	Electroplated acc. to EN ISO 4042:2018	Hot dip galvanized ≥ 50 µm acc. to EN ISO 10684:2004 + AC:2009

[1] Not in the scope of delivery

Specification of intended use

Anchor channels and channel bolts subject to:

- Static and quasi-static loads in tension and shear perpendicular to the longitudinal axis of the channel for FES in combination with channel bolt FBC.
- Static and quasi-static loads in tension and shear, shear perpendicular to the longitudinal axis of the channel and shear in the direction of the longitudinal axis of the channel for FES-H(-I)-50/30 or FES-H(-I)-52/34 in combination with notching channel bolt FBC-N-50/30-M20
- Static and quasi-static loads in tension and shear, shear perpendicular to the longitudinal axis of the channel and shear in the direction of the longitudinal axis of the channel for serrated anchor channels FES-H-S in combination with serrated channel bolts FBC-S.

Base materials:

- Reinforced or unreinforced normal weight concrete according to EN 206-1:2000.
- Strength classes C12/15 to C90/105 according to EN 206-1:2000
- Cracked or uncracked concrete.

Use conditions (Environmental conditions):

- Structures subject to dry internal conditions (e.g. accommodations, bureaus, schools, hospitals, shops, exceptional internal conditions with usual humidity)
  (anchor channels and channel bolts according to Annex A7, Table 6, column 2b and 2c).
- Structures subject to internal conditions with usual humidity (e.g. kitchens, bathrooms and laundries in residential buildings, exceptional permanent damp conditions and application under water)
  (anchor channels and channel bolts according to Annex A7, Table 6, column 2c).

Design:

- Anchor channels are designed under the responsibility of an engineer experienced in anchorages and concrete work.
- Verifiable calculation notes and drawings are prepared taking account of the loads to be anchored. The position of the anchor channel and channel bolts are indicated on the design drawings (e.g. position of the anchor channel relative to the reinforcement or to supports).
- For static and quasi-static loading as well as fire exposure the anchor channels have to be designed in accordance with EOTA TR 047 "Calculation Method for the Performance of Anchor Channels", March 2018 or EN 1992-4:2018.
- The characteristic resistances are calculated with the minimum effective embedment depth.

Installation:

- The installation of anchor channels is carried out by appropriately qualified personnel under the supervision of the person responsible for the technical matters on site.
- Use of the anchor channels only as supplied by the manufacturer - without any manipulations, repositioning or exchanging of channel components.
- Cutting of anchor channels is allowed only if pieces according to Annex A5, Table 3 are generated including end spacing x and minimum channel length l_{min} and only to be used in dry internal conditions.
- Installation in accordance with the installation instruction given in Annexes B5, B6, B7 or B8.
- The anchor channels are fixed on the formwork, reinforcement or auxiliary construction such that no movement of the channels will occur during the time of laying the reinforcement and of placing and compacting the concrete.
- The concrete around the head of the anchors is properly compacted. The channels are protected from penetration of concrete into the internal space of the channels.
- Washers may be chosen according to Annex A7 and provided separately by the user.
- Orientating the channel bolt (groove according to Annex B6, B7 and B8) rectangular to the channel axis.
- The required installation torque given in Annex B4 must be applied and must not be exceeded.
- Notching channel bolts FBC-N-50/30 may be used only once after applying the installation torque $T_{inst,s}$.

Table 7: Installation parameters

Anchor Channel FES-			C-28/15	C-38/17	H-S-29/20	H-S-38/23	C-40/25 H-40/22 H-I-40/22	C-49/30 H-50/30 H-I-50/30	C-54/33 H-52/34 H-I-52/34
Minimum effective embedment depth	$h_{ef,min}$	[mm]	45	76	77	97	79 90 79	94 94 94	155 155 155
Minimum edge distance	c_{min}		40	50	75	100	50 50 50	75 75 75	100 100 100
Minimum thickness of concrete member	h_{min} [1)]		70	100	100	100	100 100 100	100 100 100	160 160 170

[1)] $h_{min} = h_{ef} + t_h + c_{nom}$; c_{nom} according to EN 1992-1-1:2004 + AC:2010

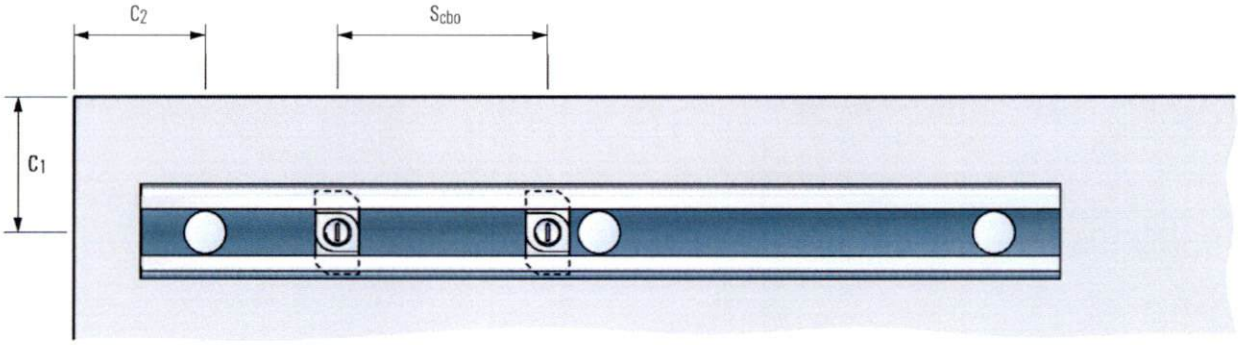

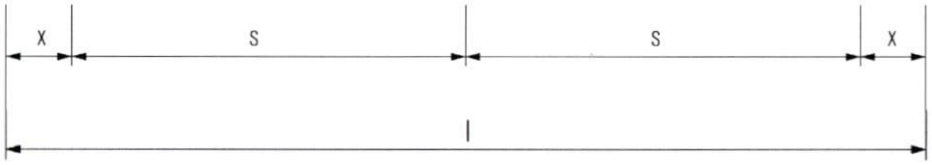

Table 8: Minimum spacing for channel bolts

Channel bolt			M8	M10	M12	M16	M20
Minimum spacing between channel bolts	$s_{cbo,min}$	[mm]	40	50	60	80	100

Table 9: Required installation torque T_{inst}

fischer Anchor channel FES-	fischer Channel Bolt FBC-		T_{inst} [1] [Nm] General $T_{inst,g}$	Steel - steel contact $T_{inst,s}$
C-28/15	28/15	M8	7	15
		M10	10	30
		M12	13	45
C-38/17	38/17	M10	15	30
		M12	20	45
H-S-29/20	S-29/20	M12	80	80
H-S-38/23	S-38/23	M12	80	80
		M16	100	100
C-38/17		M12	40	80
		M16	50	100
H(-I)-40/22 C-40/25	40/22	M10	15	30
		M12	25	45
		M16	50	100
C-49/30 H(-I)-50/30 C-54/33 H(-I)-52/34	50/30	M10	15	30
		M12	25	45
		M16	60	100
		M20	75	230
H(-I)-50/30, H(-I)-52/34	N-50/30	M20	-[2]	400

[1] T_{inst} must not be exceeded

[2] No performance assessed

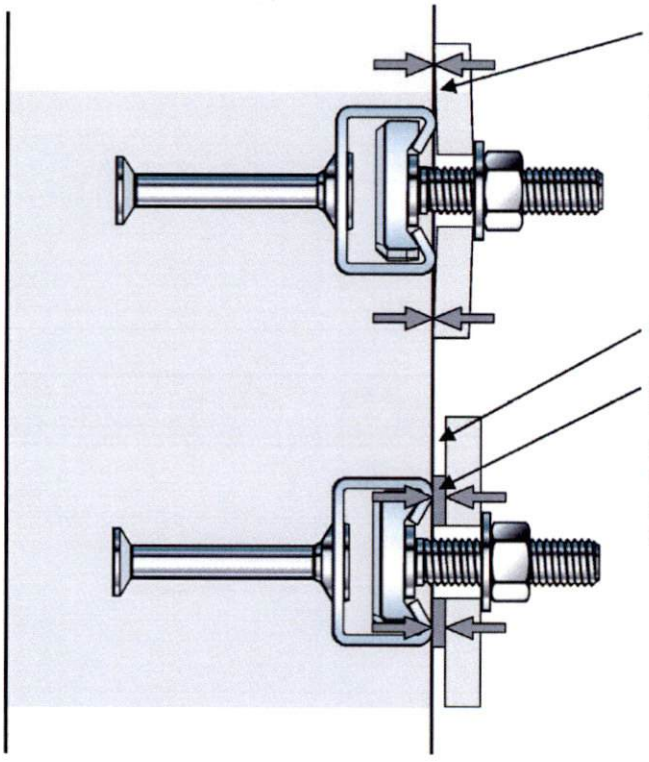

fischer Anchor Channel FES with fischer Channel Bolts FBC

Intended Use
Installation parameters for fischer Channel Bolts FBC

Annex B4

fischer

Anchor Channel FES

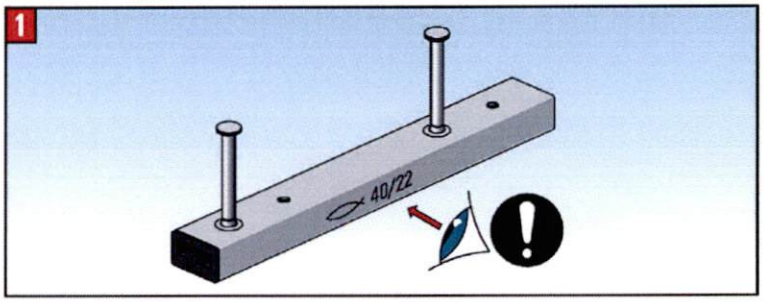

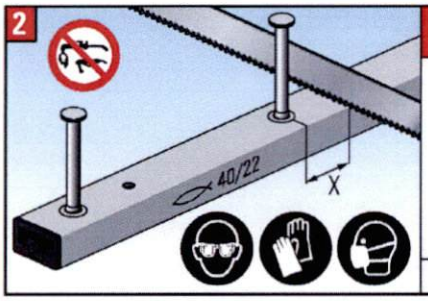

X	FES - H -	FES - C -
25 - 35 mm	S - 29 / 20	28 / 15
	S - 38 / 23	38 / 17
	(I -) 40 / 22	40 / 25
	(I -) 50 / 30	49 / 30
	I - 52 / 34	54 / 33
35 mm	52 / 34	-

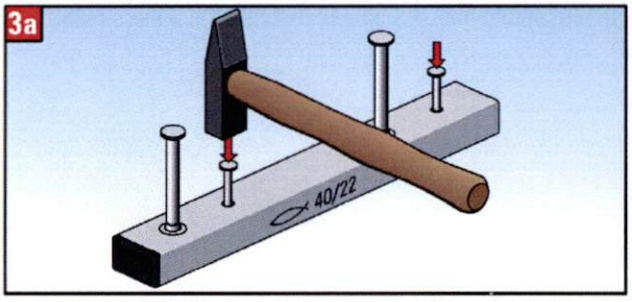

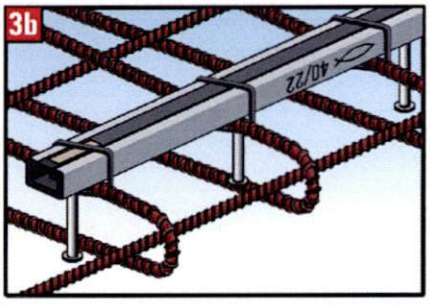

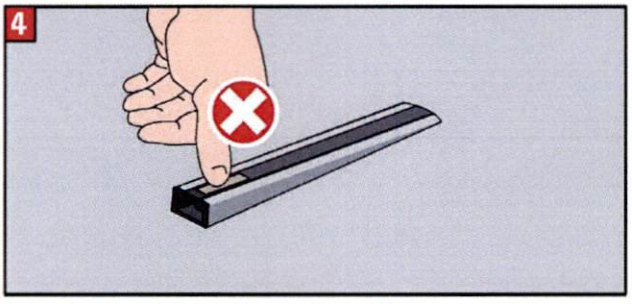

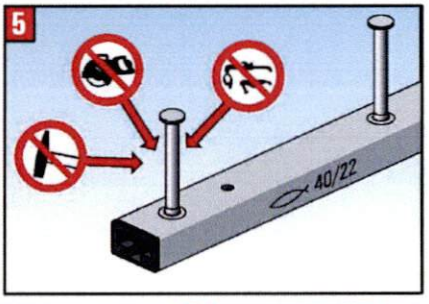

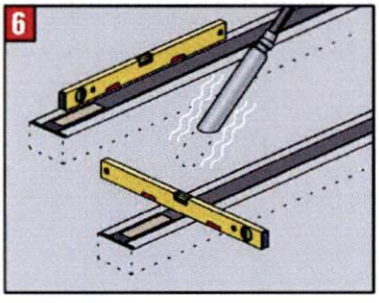

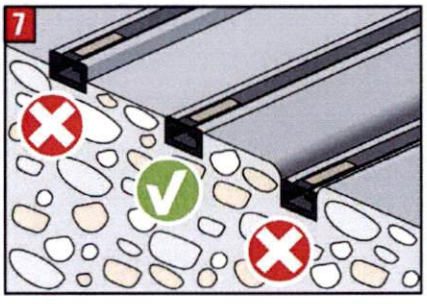

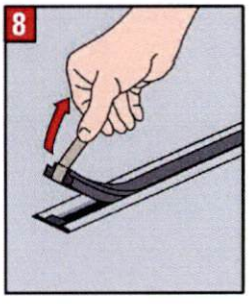

fischer Anchor Channel FES with fischer Channel Bolts FBC

Intended Use
Installation instruction for fischer Anchor Channels FES

Annex B5

fischer

Channel Bolts FBC

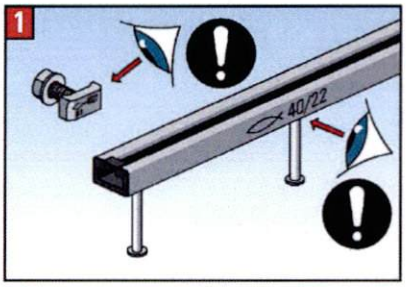

FBC -	FES - H - (I -)	FES - C -
2815	-	28 / 15
3817	-	38 / 17
4022	40 / 22	40 / 25
5030	50 / 30 52 / 34	49 / 30 54 / 33

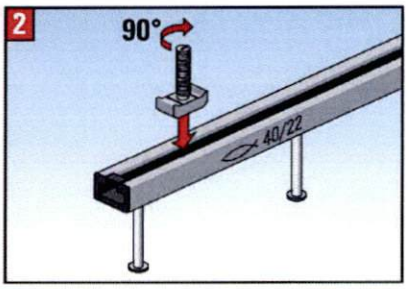

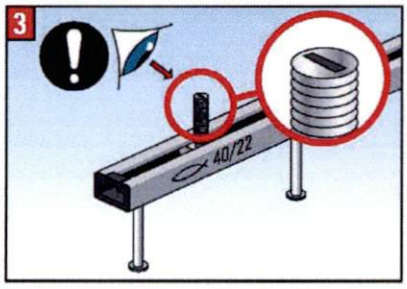

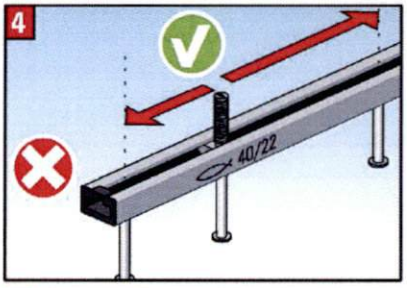

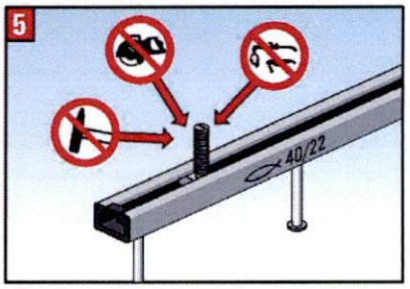

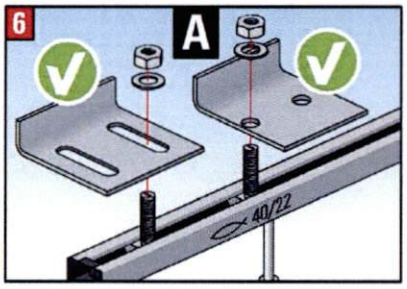

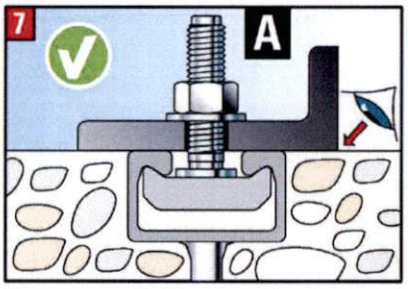

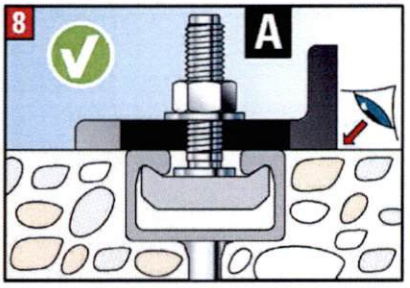

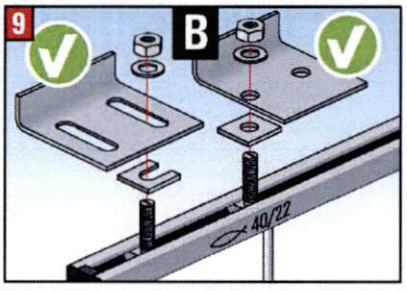

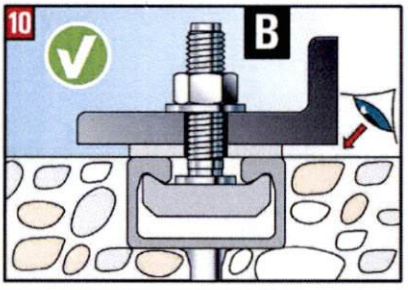

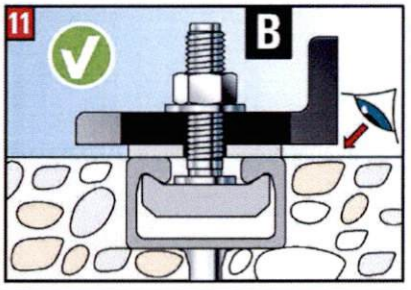

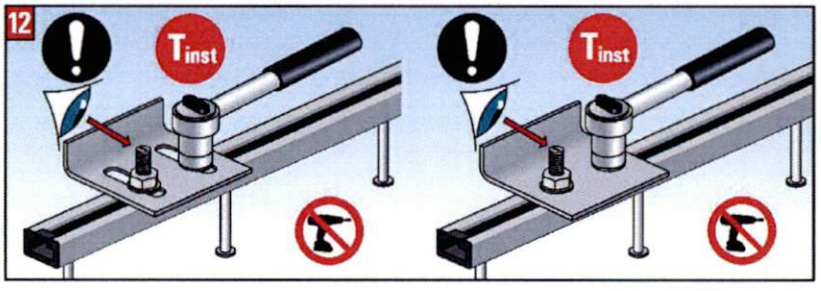

FBC	T_{inst} [Nm]	M8	M10	M12	M16	M20
2815	A	7	10	13	-	-
	B	15	30	45	-	-
3817	A	-	15	20	-	-
	B	-	30	45	-	-
4022	A	-	15	25	50	-
	B	-	30	45	100	-
5030	A	-	15	25	60	75
	B	-	30	45	100	230

T_{inst} must not be exceeded.

fischer Anchor Channel FES with fischer Channel Bolts FBC

Intended Use
Installation instruction for fischer Channel Bolts FBC

Annex B6

Serrated Channel Bolts FBC-S

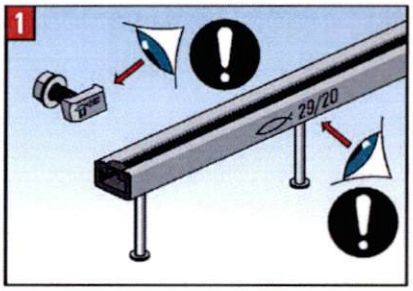

FBC-S-	FES-H-S-	FES-C-
2920	29/20	-
3823	38/23	38/17

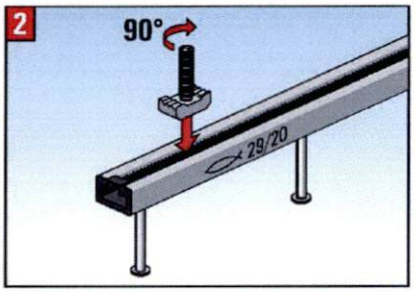

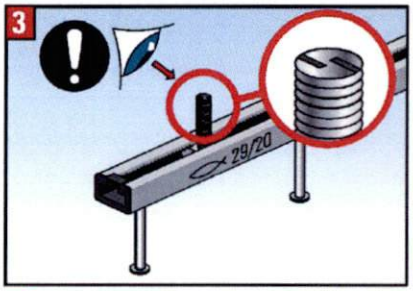

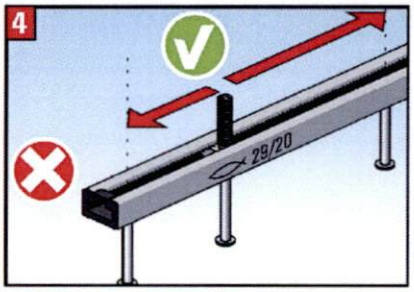

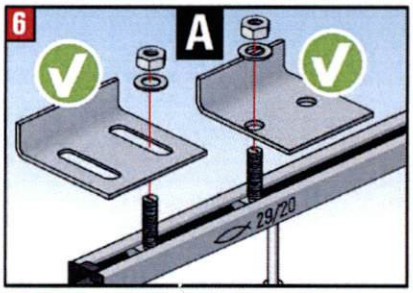

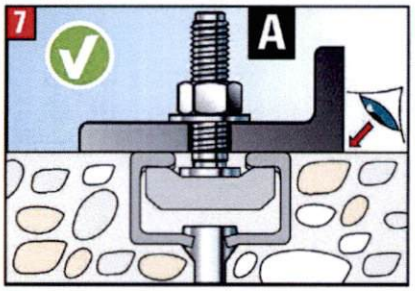

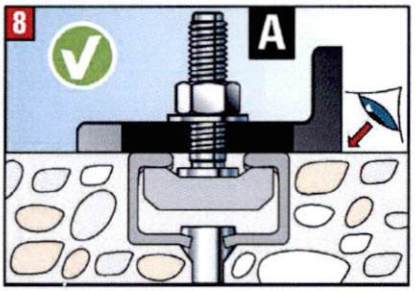

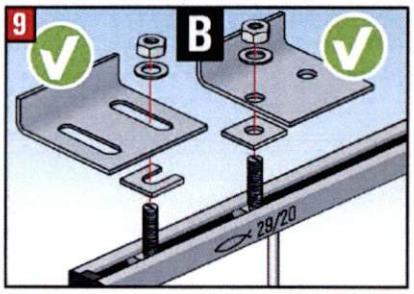

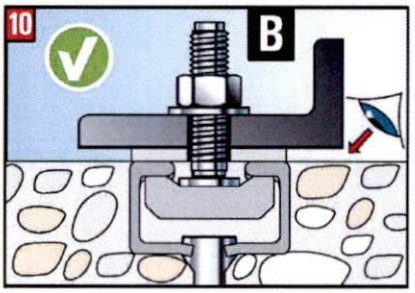

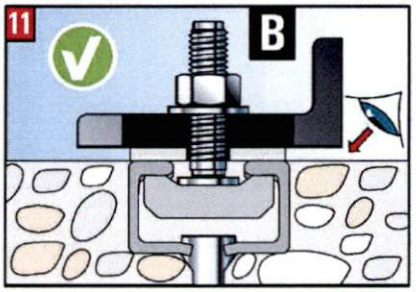

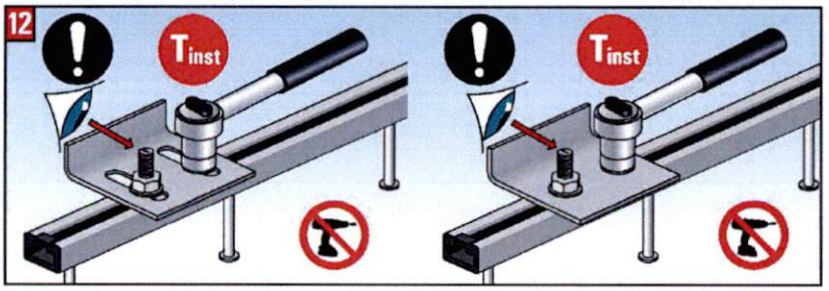

FBC-S-	FES-	T_{inst} [Nm]	M12	M16
2920	H-S-29/20	A	80	-
		B	80	-
3823	H-S-38/23	A	80	100
		B	80	100
	C-38/17	A	40	50
		B	80	100

T_{inst} must not be exceeded.

fischer Anchor Channel FES with fischer Channel Bolts FBC

Intended Use
Installation instruction for Serrated fischer Channel Bolts FBC-S

Annex B7

Notching Channel Bolts FBC-N

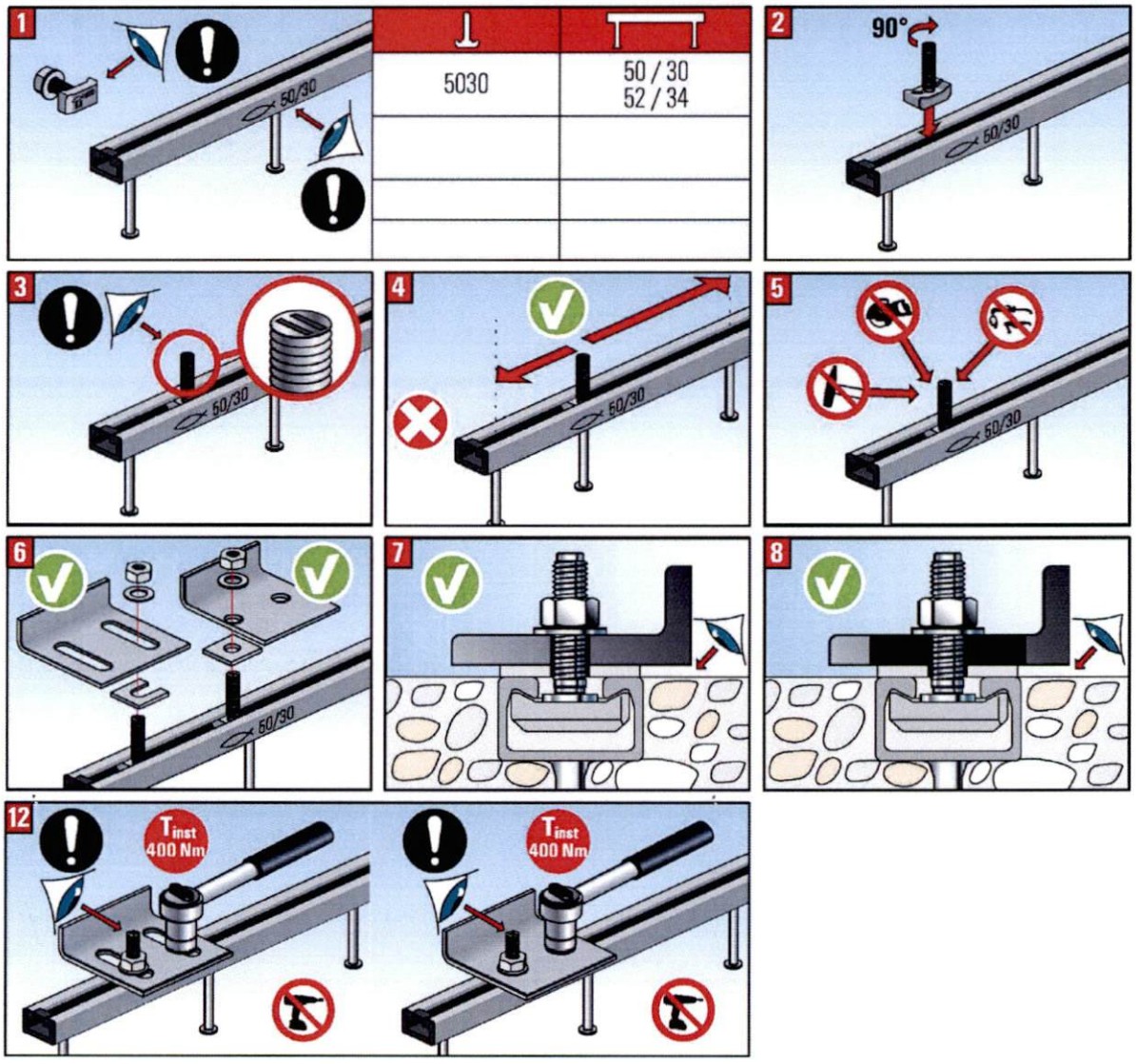

⊥	T
5030	50 / 30 52 / 34

T_{inst} must not be exceeded.

Table 10: Characteristic resistances under tension load – steel failure of anchor channel

Anchor Channel FES-			C-28/15	C-38/17	H-S-29/20	H-S-38/23	C-40/25 H-40/22 H-I-40/22	C-49/30 H-50/30 H-I-50/30	C-54/33 H-52/34 H-I-52/34
Steel failure: Failure of anchor									
Characteristic resistance	$N_{Rk,s,a}$	[kN]	9	20	31	31	20 20 35	31 31 44	55 55 70,4
Partial factor	γ_{Ms} [1)]	[-]	1,8						
Steel failure: Failure of connection between anchor and channel									
Characteristic resistance	$N_{Rk,s,c}$	[kN]	9	18	20,2	30,3	20 20 38	31 31 40	55 55 70,4
Partial factor	γ_{Ms} [1)]	[-]	1,8						
Steel failure: Local failure by flexure of channel lips									
Characteristic spacing of channel bolts for $N_{Rk,s,l}$	$s_{l,N}$	[mm]	56	76	60	76	80 80 80	100 100 100	108 105 105
Characteristic resistance	$N^0_{Rk,s,l}$	[kN]	9	18	20,2	30,3	20 38 38	31 43 43	55 72 72
Partial factor	γ_{Ms} [1)]	[-]	1,8						

[1)] In absence of other national regulations

Table 11: Characteristic flexural resistance of channel under tension load

Anchor Channel FES-			C-28/15	C-38/17	H-S-29/20	H-S-38/23	C-40/25 H-40/22 H-I-40/22	C-49/30 H-50/30 H-I-50/30	C-54/33 H-52/34 H-I-52/34
Stahlversagen: Biegung der Schiene									
Characteristic flexural resistance of channel	$M_{Rk,s,flex}$	[Nm]	310	567	745	1.241	915 1.118 1.118	1.554 2.185 2.185	2.350 3.163 3.670
Partial factor	$\gamma_{Ms,flex}$ [1)]	[-]	1,15						

[1)] In absence of other national regulations

Table 12: Characteristic resistances under tension load – concrete failure

Anchor Channel FES-			C-28/15	C-38/17	H-S-29/20	H-S-38/23	C-40/25 H-40/22 H-I-40/22	C-49/30 H-50/30 H-I-50/30	C-54/33 H-52/34 H-I-52/34
Pullout failure									
Characteristic resistance in cracked concrete C12/15	$N_{Rk,p}$	[kN]	7,6	13,6	21,2	21,2	13,6 13,6 27,0	21,2 21,2 33,8	33,2 33,2 54,0
Characteristic resistance in uncracked concrete C12/15	$N_{Rk,p}$	[kN]	10,7	19,0	29,7	29,7	19,0 19,0 37,8	29,7 29,7 47,3	46,5 46,5 75,6
Factor of $N_{Rk,p}$	C16/20	ψ_c [-]	1,33						
	C20/25		1,67						
	C25/30		2,08						
	C30/37		2,50						
	C35/45		2,92						
	C40/50		3,33						
	C45/55		3,75						
	C50/60		4,17						
	C55/67		4,58						
	≤C60/75		5,00						
Partial factor	$\gamma_{Mp}=\gamma_{Mc}$ [1)]	[-]	1,5						
Concrete cone failure,	factor k_1								
Cracked concrete	$k_{cr,N}$	[-]	7,2	7,8	7,8	8,1	7,9 8,0 7,9	8,1 8,1 8,1	8,7 8,7 8,7
Uncracked concrete	$k_{ucr,N}$	[-]	$=1{,}427 * k_{cr,N}$						
Partial factor	γ_{Mc} [1)]	[-]	1,5						
Splitting failure,									
Characteristic edge distance	$c_{cr,sp}$	[mm]	$= 3 * h_{ef}$						
Characteristic spacing	$s_{cr,sp}$	[mm]	$= 2 * c_{cr,sp} = 6 * h_{ef}$						
Partial factor	γ_{Msp}	[-]	1,5						

[1)] In absence of other national regulations

Table 13: Displacements under tension load

Anchor Channel FES-			C-28/15	C-38/17	H-S-29/20	H-S-38/23	C-40/25 H-40/22 H-I-40/22	C-49/30 H-50/30 H-I-50/30	C-54/33 H-52/34 H-I-52/34
Tension load	N	[kN]	3,6	7,1	8,0	12,0	7,9 15,1 15,1	12,3 17,1 17,1	21,8 28,6 28,6
Short term displacement [1)]	δ_{N0}	[mm]	0,7	1,3	1,4	2,0	1,5 2,2 2,2	1,4 1,5 1,5	1,2 1,9 1,9
Long term displacement [1)]	$\delta_{N\infty}$	[mm]	1,4	2,6	2,8	4,0	3,0 4,5 4,5	2,8 2,9 2,9	2,4 3,7 3,7

[1)] Displacements in midspan of the anchor channel, including slip of channel bolt, deformation of channel lips, bending of the channel and slip of the anchor channel in concrete

Table 14: Characteristic resistances under shear load – steel failure of anchor channel

Anchor Channel FES-			C-28/15	C-38/17	H-S-29/20	H-S-38/23	C-40/25 H-40/22 H-I-40/22	C-49/30 H-50/30 H-I-50/30	C-54/33 H-52/34 H-I-52/34
Steel failure: Failure of anchor									
Characteristic resistance	$V_{Rk,s,a,y}$	[kN]	9	18	20,2	30,3	20 40 40	31 60 60	55 100 100
	$V_{Rk,s,a,x}$	[kN]	-2)	-2)	18,8	18,8	-2) -2) -2)	-2) 18,8 26,4	-2) 33,0 42,2
Partial factor	γ_{Ms} 1)	[-]	1,8						
Failure of connection between anchor and channel									
Characteristic resistance	$V_{Rk,s,c,y}$	[kN]	9	18	20,2	30,3	20 40 40	31 60 60	55 100 100
	$V_{Rk,s,c,x}$	[kN]	-2)	-2)	12,1	18,2	-2) -2) -2)	-2) 18,6 24,0	-2) 33,0 42,2
Partial factor	γ_{Ms} 1)	[-]	1,8						
Local failure by flexure of channel lips under shear load perpendicular to the longitudinal axis of the channel									
Characteristic spacing of channel bolts for $V_{Rk,s,l}$	$s_{l,V}$	[mm]	56	76	60	76	80 80 80	100 100 100	108 108 108
Characteristic resistance	$V^0_{Rk,s,l,y}$	[kN]	9	18	20,2	30,3	20 40 40	31 60 60	55 100 100
Partial factor	γ_{Ms} 1)	[-]	1,8						

1) In absence of other national regulations
2) No performance assessed.

Table 15: Characteristic resistance for shear load in direction of the longitudinal axis of the channel – steel failure

Anchor Channel FES-				H-S-29/20	H-S-38/23	H-40/22 H-I-40/22	H-50/30 H-I-40/22	H-52/34 H-I-52/34
Steel failure: Connection between channel lips and channel bolt								
Characteristic resistance	$V_{Rk,s,l,x}$	[kN]	FBC-S-29/20-M12-8.8	22,5	-2)	-2)	-2)	-2)
			FBC-S-38/23-M12-8.8	-2)	23,2	-2)	-2)	-2)
			FBC-S-38/23-M16-8.8	-2)	30,3	-2)	-2)	-2)
			FBC-N-50/30-M20-8.8	-2)	-2)	-2)	18,7	18,7
Installation factor	γ_{inst} 1)	[-]		1,2	1	-2)	1,4	1,4

1) In absence of other national regulations
2) No performance assessed.

Table 16: Characteristic resistances under shear load – concrete failure

Anchor Channel FES-			C-28/15	C-38/17	H-S-29/20	H-S-38/23	C-40/25 H-40/22 H-I-40/22	C-49/30 H-50/30 H-I-50/30	C-54/33 H-52/34 H-I-52/34
Pryout failure									
Product factor	k_8	[-]	1	2	2	2	2	2	2
Partial factor	γ_{Mc} 1)	[-]	1,5						
Concrete edge failure k_{12}									
Cracked concrete	$k_{cr,V}$	[-]	5,8	6,9	5,6	5,6	7,5	7,5	7,5
Uncracked concrete	$k_{ucr,V}$	[-]	8,1	9,7	7,8	7,8	10,5	10,5	10,5
Partial factor	γ_{Mc} 1)	[-]	1,5						

1) In absence of other national regulations

Table 17: Displacements under shear load

Anchor Channel FES-			C-28/15	C-38/17	H-S-29/20	H-S-38/23	C-40/25 H-40/22 H-I-40/22	C-49/30 H-50/30 H-I-50/30	C-54/33 H-52/34 H-I-52/34
Shear load perpendicular to the longitudinal axis of the channel	V_y	[kN]	3,6	7,1	8,0	12,0	7,9 15,9 15,9	12,3 23,8 23,8	21,8 39,7 39,7
Short time displacement 1)	$\delta_{V,y,0}$	[mm]	0,7	1,3	1,4	2,0	1,5 2,1 2,1	1,4 3,7 3,7	1,2 4 4
Long time displacement 1)	$\delta_{V,y,\infty}$	[mm]	1,1	2,0	2,1	3,0	2,3 3,2 3,2	2,1 5,5 5,5	1,8 5,9 5,9
Shear load in direction of the longitudinal axis of the channel	V_x	[kN]	-3)	-3)	6,6	12,0	-3) -3) -3)	5,1 5,1 5,1	5,1 5,1 5,1
Short time displacement 2)	$\delta_{V,x,0}$	[mm]	-3)	-3)	0,6	0,8	-3) -3) -3)	0,5 0,5 0,5	0,5 0,5 0,5
Long time displacement 2)	$\delta_{V,x,\infty}$	[mm]	-3)	-3)	0,9	1,3	-3) -3) -3)	0,8 0,8 0,8	0,8 0,8 0,8

1) Displacements in midspan of the anchor channel, including slip of channel bolt, deformation of channel lips and slip of the anchor channel in concrete
2) Displacements of the anchor channel, including slip of channel bolt, deformation of channel lips and slip of the anchor channel in concrete
3) No performance assessed.

Table 18: Characteristic resistances under combined tension and shear load

Anchor Channel FES-			C-28/15	C-38/17	H-S-29/20	H-S-38/23	C-40/25 H-40/22 H-I-40/22	C-49/30 H-50/30 H-I-50/30	C-54/33 H-52/34 H-I-52/34
Steel failure: Local failure by flexure of channel lips and failure by flexure of channel									
Product factor	k_{13}	[-]	according to EN 1992-4:2019, 7.4.3.1						
Steel failure: Failure of anchor and connection between anchor and channel									
Product factor	k_{14}	[-]	according to EN 1992-4:2019, 7.4.3.1						

Table 19: Characteristic resistances under tension and shear load – steel failure of channel bolts

Channel bolt			M8	M10	M12	M16	M20
Steel failure, Characteristic tension resistance							
FBC-28/15	$N_{Rk,s}$	[kN]	29,2	33,0	45,1	-[2]	-[2]
FBC-38/17			-[2]	46,4	67,4	-[2]	-[2]
FBC-S-29/20			-[2]	-[2]	48,5	-[2]	-[2]
FBC-S-38/23			-[2]	-[2]	67,4	71,5	-[2]
FBC-40/22			-[2]	46,4	55,1	82,2	-[2]
FBC-50/30			-[2]	46,4	67,4	96,5	127,2
FBC-N-50/30			-[2]	-[2]	-[2]	-[2]	142,5
Partial factor	γ_{Ms} [1]	[-]	1,5				
Characteristic shear resistance	$V_{Rk,s,x} = V_{Rk,s,y}$	[kN]	14,6	23,2	33,7	62,8	98,0
Partial factor	γ_{Ms} [1]	[-]	1,25				

[1] In absence of other national regulations
[2] Combination not available

Table 20: Characteristic resistances under shear load with lever arm – steel failure of channel bolts

Channel bolt [2]				M8	M10	M12	M16	M20
Steel failure								
Characteristic bending resistance	$M^0_{Rk,s}$ [3]	[Nm]	FBC-(S-) (N-)	30,0	59,8	104,8	266,4	519,3
Partial factor	γ_{Ms} [1]	[-]		1,25				
Internal lever arm	a	[mm]	FBC-28/15	16,7	18,1	19,4	-[3]	-[3]
			FBC-38/17	-[3]	22,7	24,0	-[3]	-[3]
			FBC-S-29/20	-[3]	-[3]	20,0	-[3]	-[3]
			FBC-S-38/23	-[3]	-[3]	23,7	25,7	-[3]
			FBC-40/22	-[3]	23,5	24,8	26,8	-[3]
			FBC-50/30	-[3]	27,7	29,0	31,0	33,3
			FBC-N-50/30	-[3]	-[3]	-[3]	-[3]	34,0

[1] In absence of other national regulations

[2] Materials according to Annex A7, Table 6

[3] Combination not available

[4] The characteristic flexure resistance according to Table 19 is limited as follows:

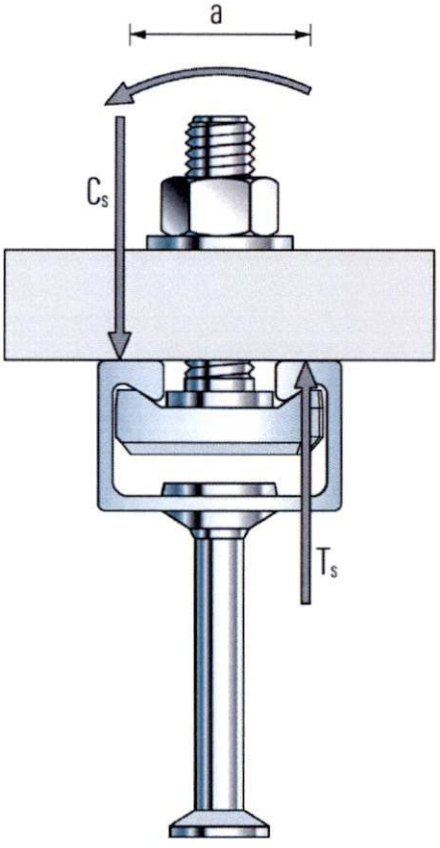

$M^0_{Rk,s} \leq 0{,}5 \cdot N^0_{Rk,s,l} \cdot a$ ($N^0_{Rk,s,l}$ according to Annex C1, Table 10)

$M^0_{Rk,s} \leq 0{,}5 \cdot N_{Rk,s} \cdot a$ ($N_{Rk,s}$ according to Annex C5, Table 18)

a = Internal lever arm according to Table 19

T_s = Tension force acting on the channel lips

C_s = Compression force acting on the channel lips