DICHIARAZIONE DI PRESTAZIONE

n. 0057 – IT

1. Codice di identificazione unico del prodotto-tipo: **fischer TERMOZ PN 8**

2. Usi previsti:

Prodotto	**Uso/i previsto/i**
Fissaggio plastico per l'utilizzo in calcestruzzo e muratura	Per l'utilizzo in sistemi compositi di isolamento termico esterno (ETICS) con rasatura per la trasmissione dell'azione del vento in aspirazione, vedere l'appendice, specialmente gli Annessi B 1 a B 3

3. Fabbricante: **fischerwerke GmbH & Co. KG, Klaus-Fischer-Straße 1, 72178 Waldachtal, Germania**

4. Mandatario: **--**

5. Sistemi di VVCP: **2+**

6a. Norma armonizzata: ---

Organismi notificati: ---

6b. Documento per la valutazione europea: **ETAG 014; 2011-02**

Valutazione tecnica europea: **ETA-09/0171; 2016-03-18**

Organismo di valutazione tecnica: **DIBt**

Organismi notificati: **1343 – MPA Darmstadt**

7. Prestazioni dichiarate:

Sicurezza durante l'uso (BWR 4)

Caratteristiche essenziali	**Prestazione**
resistenza caratteristica a trazione	Vedere appendice, specialmente Annesso C 1
Distanze dai bordi e interassi	Vedere appendice, specialmente Annesso B 2
Trasmittanza termica puntuale	Vedere appendice, specialmente Annesso C 2
Rigidezza piastra	Vedere appendice, specialmente Annesso C 2
Spostamenti	Vedere appendice, specialmente Annesso C 2

8. Documentazione tecnica appropriata e/o documentazione tecnica specifica: ---

La prestazione del prodotto sopra identificato è conforme all'insieme delle prestazioni dichiarate. La presente dichiarazione di responsabilità viene emessa, in conformità al regolamento (UE) n. 305/2011, sotto la sola responsabilità del fabbricante sopra identificato.

Firmato a nome e per conto del fabbricante da:

Andreas Bucher, Dipl.-Ing.

Wolfgang Hengesbach, Dipl.-Ing., Dipl.-Wirtsch.-Ing.

Tumlingen, 2016-03-30

- Questa Dichiarazione di Prestazione (DoP) è stata preparata in diverse lingue. In caso di divergenza d'interpretazione avrà sempre prevalenza la versione inglese.
- L'appendice include informazioni volontarie e complementari in lingua inglese (lingua specificata neutrale) eccetto i requisiti di legge

Specific Part

1 Technical description of the product

The fischer nailed-in anchor termoz PN 8 consists of a plastic sleeve made of polypropylene, a plate and an accompanying specific nail made of glass fibre reinforced polyamide.

The anchor may in addition be combined with the anchor plates DT 90, DT 110 and DT 140.

The Product description is given in Annex A.

2 Specification of the intended use in accordance with the applicable European Assessment Document

The performances given in Section 3 are only valid if the anchor is used in compliance with the specifications and conditions given in Annex B.

The verification and assessment methods on which this European Technical Assessment is based lead to the assumption of a working life of the anchor of at least 25 years. The indications given on the working life cannot be interpreted as a guarantee given by the producer, but are to be regarded only as a means for choosing the right products in relation to the expected economically reasonable working life of the works.

3 Performance of the product and references to the methods used for its assessment

3.1 Mechanical resistance and stability (BWR 1)

The essential characteristics regarding mechanical resistance and stability are included under the Basic Works Requirement Safety in use.

3.2 Hygiene, health and the environment (BWR 3)

Regarding dangerous substances there may be requirements (e.g. transposed European legislation and national laws, regulations and administrative provisions) applicable to the products falling within the scope of this European Technical Assessment. In order to meet the provisions of Regulation (EU) No 305/2011, these requirements need also to be complied with, when and where they apply.

3.3 Safety in use (BWR 4)

Essential characteristic	Performance
Characteristic tension resistance	See Annex C 1
Edge distances and spacing	See Annex B 2
Point thermal transmittance	See Annex C 2
Plate stiffness	See Annex C 2
Displacements	See Annex C 2

4 Assessment and verification of constancy of performance (AVCP) system applied, with reference to its legal base

In accordance with guideline for European technical approval ETAG 014, February 2011 used as European Assessment Document (EAD) according to Article 66 Paragraph 3 of Regulation (EU) No 305/2011 the applicable European legal act is: 97/463/EC.

The system to be applied is: 2+

termoz PN 8

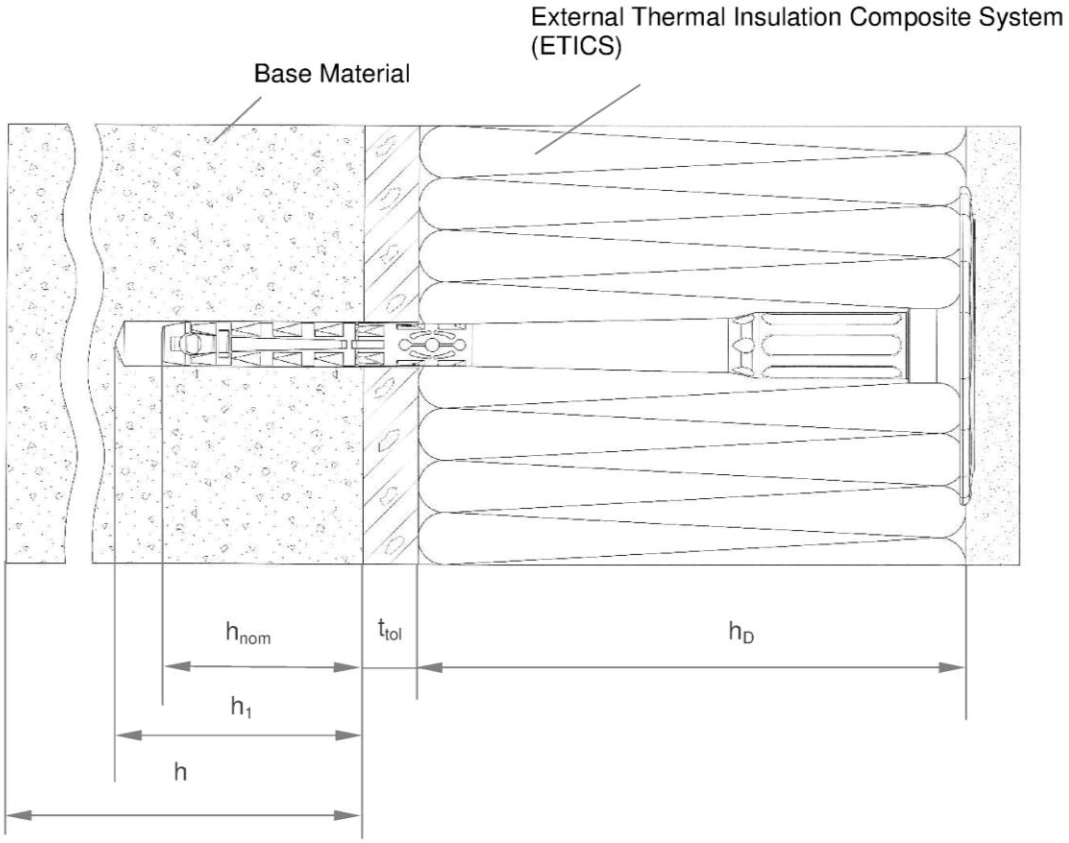

Legend

h_{nom}	=	Overall plastic anchor embedment depth in the base material
h_1	=	Depth of drilled hole to deepest point
h	=	Thickness of member (wall)
h_D	=	Thickness of insulation material
t_{tol}	=	Thickness of equalizing layer or non–load bearing coating

fischer termoz PN 8	**Annex A1**
Product description Installed anchor	

termoz PN 8

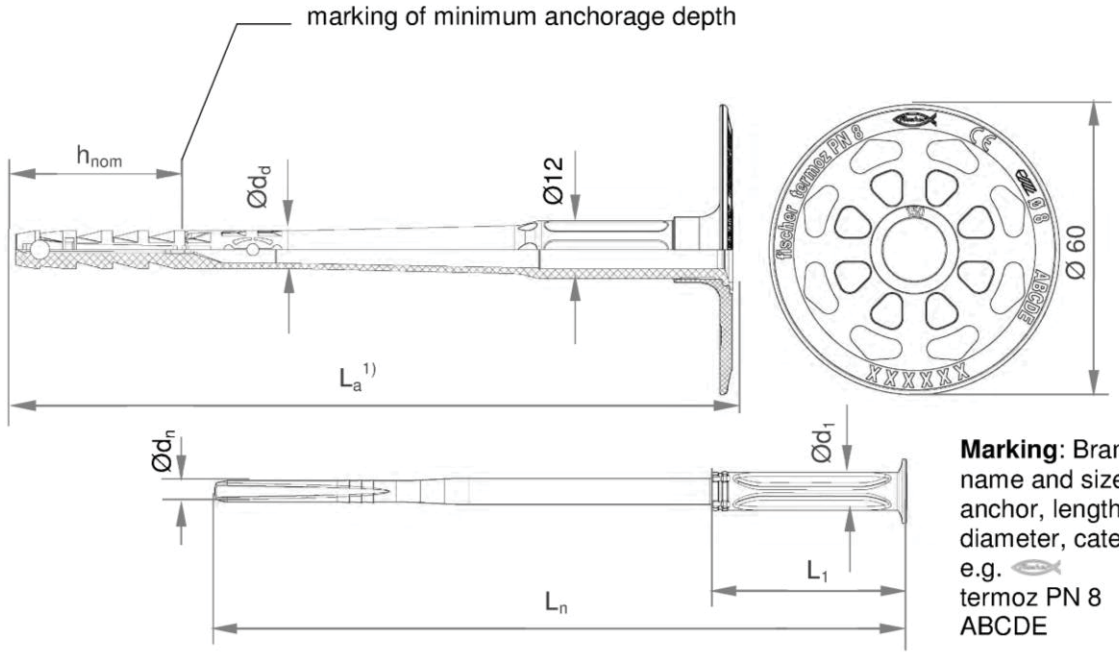

Marking: Brand, name and size of anchor, length, diameter, categories e.g. termoz PN 8 ABCDE

1) Various length of the anchors are possible

Table A2.1: Dimensions

Anchor type	Anchor sleeve		Accompanying specific plastic nail		
	Ø d_d [mm]	**h_{nom}** [mm]	**Ø d_n** [mm]	**L_1** [mm]	**Ø d_1** [mm]
termoz PN 8	8	35/55 1)	4,4	40	8

1) Only for use Cat. D and E

Determination of maximum thickness of insulation: $h_D = L_a - h_{nom} - t_{tol}$

e.g. for termoz PN 8x150:

L_a = 148 mm, h_{nom} = 35 mm, t_{tol} = 10 h_D = 148 - 35 - 10 ≈ 100 mm

termoz PN 8 : $L_{a\,min} \geq 110$ mm; $L_{a\,max} \leq 230$ mm

L_a = length of accompanying specific nail L_n + 5 mm

fischer termoz PN 8	**Annex A2**
Product description Dimensions	

Table A3.1: Material

Designation	Material
Anchor sleeve	PP, colour: grey
Specific plastic nail	PA 6 GF, colour: nature
Slip-on plate	PA6, GF colour: grey, orange, red, green, yellow, blue

Drawing of the slip-on plates

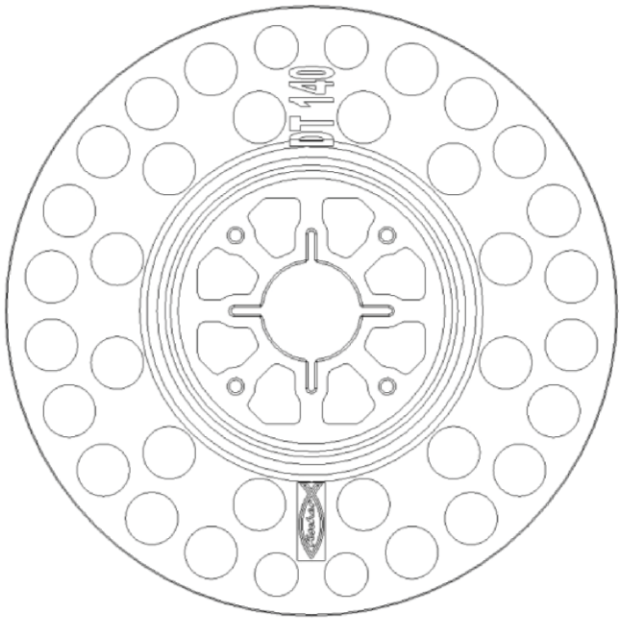

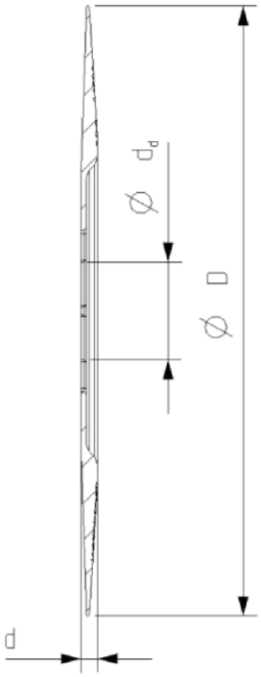

Table A3.2 Slip-on plates, diameters and material

Slip-on plate	Ø D [mm]	Ø d_d [mm]	d [mm]	Material
DT 90 / 110 / 140	90 / 110 / 140	22,5	3,9	PA 6 GF

fischer termoz PN 8	**Annex A3**
Product description Material Slip-on plates combined with termoz PN 8	

Specifications of intended use

Anchorages subject to:

- The anchor may only be used for transmission of wind suction loads and shall not be used for the transmission of dead loads of the external thermal insulation composite system (ETICS).

Base materials:

- Normal weight concrete (use category A) according to Annex C1.
- Solid masonry (use category B), according to Annex C1.
- Hollow or perforated masonry (use category C), according to Annex C1.
- Lightweight aggregate concrete (use category D), according to Annex C1.
- Autoclaved aerated concrete (use category E), according to Annex C1.
- For other base materials of the use categories A, B, C, D and E the characteristic resistance of the anchor may be determined by job site tests according to ETAG 014 Edition February 2011, Annex D.

Temperature Range:

- 0°C to +40°C (max. short term temperature +40°C and max. long term temperature +24°C).

Design:

- The anchorages are designed in accordance with ETAG 014 Edition February 2011 under the responsibility of an engineer experienced in anchorages and masonry work.
- Verifiable calculation notes and drawings are prepared taking account of the loads to be anchored. The position of the anchors is indicated on the design drawings.
- Fasteners are only to be used for multiple fixings of ETICS.

Installation:

- Drilling method according to Annex C1.
- Anchor installation carried out by appropriately qualified personnel and under the supervision of the person responsible for technical matters on the site.
- Installation temperature from 0°C to +40°C
- Exposure to UV due to solar radiation of the anchor not protected by rendering ≤ 6 weeks.

Table B2.1: Installation parameters

Anchor type				termoz PN 8
Drill hole diameter	d_0	=	[mm]	8
Cutting diameter of drill bit	d_{cut}	≤	[mm]	8,45
Depth of drilled hole to deepest point	h_1	≥	[mm]	45/65[1)]
Overall plastic anchor embedment depth in the base material	h_{nom}	≥	[mm]	35/55[1)]

[1)] Only for use categorie “D” and “E”

Table B2.2: Minimum distances and spacings

				termoz PN 8
Minimum thickness of member	h	≥	[mm]	100
Minimum spacing	s_{min}	=	[mm]	100
Minimum edge distance	c_{min}	=	[mm]	100

Scheme of distance and spacing

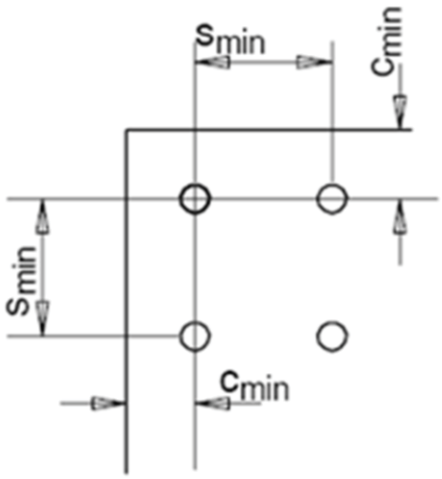

fischer termoz PN 8	**Annex B2**
Intended use Installation parameters Minimum distances and spacings	

Installation instructions

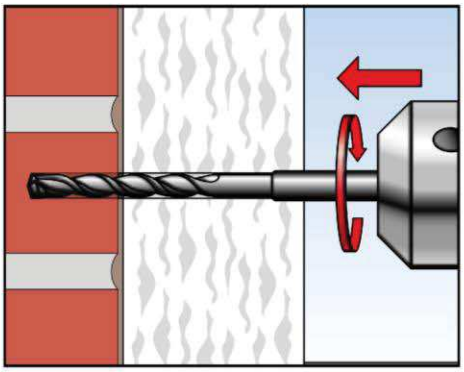

1. Drill hole by corresponding drilling method.

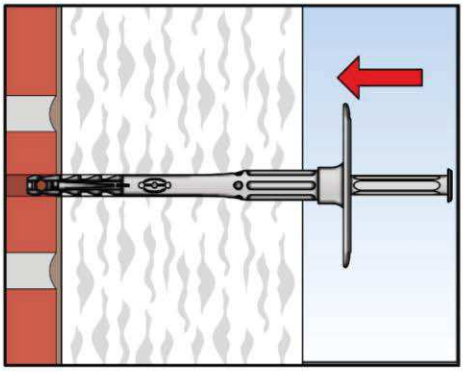

2. Insert anchor manually.

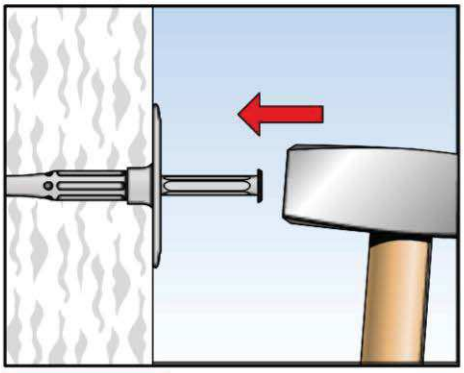

3. Set anchor by hammer-blows.

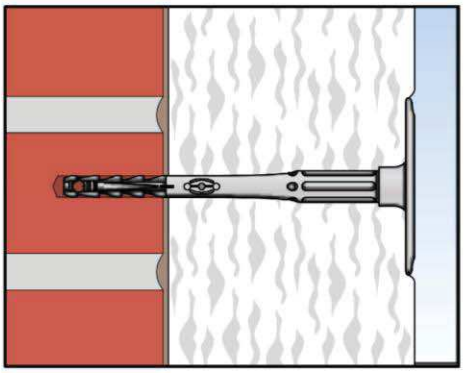

4. Correctly installed anchor.

fischer termoz PN 8	**Annex B3**
Intended use Installation instruction	

Table C1.1: Characteristic resistance N_{Rk} in [kN] to tension loads for single anchor

Base material	Use cat.[1)]	Bulk density class ρ [kg/dm³]	Min. compressive strength f_b [N/mm²]	Remarks	Drill method [2)]	Characteristic resistance N_{Rk} to tension loads [kN] **termoz PN 8**
Concrete ≥ C12/15 - C50/60 EN 206:2013	A	-	-	-	H	**0,5**
Solid Clay bricks e.g. acc. to DIN 105-100:2012-01, EN 771-1:2011, Mz	B	≥ 2,0	12	Cross section reduced up to 15% by perforation vertically to the resting area	H	**0,6**
Calcium silicate solid bricks, e.g. acc. to DIN V 106:2005-10, EN 771-2:2011, KS	B	≥ 1,8	12	Cross section reduced up to 15% by perforation vertically to the resting area	H	**0,6**
Vertically perforated clay bricks e.g. acc. to DIN 105-100:2012-01, EN 771-1:2011, HLz	C	≥ 1,0	12	Cross section reduced between 15% and 50% by perforation vertically to the resting area. Exterior web thickness ≥ 12 mm	R	**0,4**
Hollow calcium silicate brick, e.g. acc. to DIN V 106:2005-10, EN 771-2:2011, KSL	C	≥ 1,4	12	Cross section reduced between 15% and 50% by perforation vertically to the resting area. Exterior web thickness ≥ 23 mm	H	**0,4**
Lightweight concrete hollow blocks e.g. acc. to DIN V 18151-100: 2005-10, EN 771-3:2011, Hbl	C	≥ 1,2	10	-	H	**0,5**
Lightweight aggregate concrete, LAC e.g. acc. to EN 1520:2011	D	≥ 0,9	4	Minimum solid brick or minimum exterior web thickness t = 50 mm	H	**0,3**
			6			**0,4**
Autoclaved aerated concrete blocks, AAC e.g. acc. to DIN V 4165-100:2005-10, EN 771-4:2011	E	≥ 0,5	4	-	R	**0,3**
		≥ 0,6	6			**0,4**
Partial safety factor for anchor resistance[3)]					γ_M	**2,0**

1) See Annex B 1
2) R = Rotary drilling | H = Hammer drilling
3) In absence of other national regulations

fischer termoz PN 8	**Annex C1**
Performance Characteristic resistance	

Table C2.1 Point thermal transmittance acc. to EOTA Technical Report TR 025:2007-06

Anchor type	Thickness of insulation material h_D [mm]	Point thermal transmittance χ [W/K]
termoz PN 8	60 - 180	0,000

Table C2.2: Plate stiffness acc. to EOTA Technical Report TR 026:2007-06

Anchor type	Max. size of the anchor plate [mm]	Load resistance of the anchor plate [kN]	Plate stiffness [kN/mm]
termoz PN 8	60	1,7	0,6

Table C2.3 Displacements

Base material		Tension load F_{Rd} [kN]	Displacements δ_m [mm]
Concrete ≥ C12/15 – C50/60 acc. to EN 206:2013		0,15	0,2
Clay brick e.g.acc. to DIN 105-100:2012-01, EN 771-1:2011, Mz 12		0,20	0,2
Calcium silicate solid bricks e.g. acc. to DIN V 106:2005-10 EN 771-2 :2011,KS 12		0,20	0,3
Vertically perforated clay brick e.g. acc. to DIN 105-100:2012-01 EN 771-1:2011,Hlz 12		0,15	0,4
Hollow calcium silicate brick e.g. acc. to DIN V 106:2005-10 EN 771-2:2011, KSL 12		0,15	0,2
Hollow brick lightweight concrete e.g. acc. to DIN V 18153-100: 2005-10, EN 771-3:2011, Hbl 4		0,15	0,2
Lightweight aggregate concrete e.g. acc. to EN 1520:2011	LAC 4	0,10	0,2
	LAC 6	0,13	
Autoclaved aerated concrete blocks e.g. acc. to DIN V 4165-100:2005-10 EN 771-4	AAC 4	0,10	0,1
	AAC 6	0,13	0,2

fischer termoz PN 8	**Annex C2**
Performance Point thermal transmittance | Plate stiffness Displacements	