# DICHIARAZIONE DI PRESTAZIONE

## DoP 0422

per il Sistema a Iniezione fischer FIS VB (ancorante chimico per l'utilizzo nel calcestruzzo) IT

1. Codice di identificazione unico del prodotto-tipo: **DoP 0422**

2. Usi previsti: **Fissaggio post-installato in calcestruzzo fessurato o non fessurato, vedi appendice, in particolare gli allegati da B1 - B11.**

3. Fabbricante: **fischerwerke GmbH & Co. KG, Otto-Hahn-Straße 15, 79211 Denzlingen, Germany**

4. Mandatario: **–**

5. Sistemi di VVCP: **1**

6. Documento per la valutazione europea: **EAD 330499-02-0601; 2022-09 (Decision (EU) 2024/1944 )**
   Valutazione tecnica europea: **ETA-24/0274; 2026-08-19**
   Organismo di valutazione tecnica: **1020, TZUS - TECHNICKY A ZKUSEBNI USTAV STAVEBNI PRAHA s.p.**
   Organismi notificati: **2873, Technische Universität Darmstadt, Institut für Stahlbau und Werkstoffmechanik**

7. Prestazioni dichiarate:

**Resistenza meccanica e stabilità (BWR 1)**

**Resistenza caratteristica al carico di tensione (carico statico e quasi-statico):**

1) Resistenza alla rottura dell'acciaio: vedi appendice, in particolare gli allegati da C1, C2
2) Resistenza alla rottura del calcestruzzo combinata con sfilamento: vedi appendice, in particolare gli allegato da C4
3) Resistenza alla rottura del cono di calcestruzzo: vedi appendice, in particolare gli allegato da C3
4) Distanza dal bordo per evitare lo splitting sotto carico: vedi appendice, in particolare gli allegato da C3
5) Robustezza: vedi appendice, in particolare gli allegati da C3, C4
6) Massima coppia di installazione: vedi appendice, in particolare gli allegati da B3, B4
7) Distanza dal bordo e interassi minimi, Spessore dell'elemento: vedi appendice, in particolare gli allegati da B3 - B5

**Resistenza caratteristica al carico di taglio (carico statico e quasi statico):**

8) Resistenza alla rottura dell'acciaio: vedi appendice, in particolare gli allegati da C1, C2
9) Resistenza alla rottura per pry-out: vedi appendice, in particolare gli allegato da C3
10) Resistenza alla rottura del bordo di calcestruzzo: vedi appendice, in particolare gli allegato da C3

**Spostamenti con carichi a breve e a lungo termine:**

11) Spostamenti con carichi a breve e a lungo termine: vedi appendice, in particolare gli allegato da C5
12) Resistenza nel calcestruzzo rinforzato con fibre d'acciaio: NPD

**Resistenza e spostamenti caratteristici per le categorie di prestazione sismica C1 e C2:**

13) Resistenza al carico di trazione, categoria C1: NPD
14) Resistenza al carico di trazione, categoria C2: NPD
15) Resistenza al carico di taglio, categoria C1: NPD
16) Resistenza al carico di taglio, categoria C2: NPD

**Sicurezza in caso di incendio (BWR 2)**

17) Reazione al fuoco: Classe (A1)

**Resistenza al fuoco:**

18) Resistenza al fuoco alla rottura dell'acciaio (carico di trazione): NPD
19) Resistenza al legame in condizioni di incendio: NPD
20) Resistenza la fuoco alla rottura dell'acciaio (carico di taglio): NPD

**Igiene, salute e ambiente (BWR 3)**

21) Contenuto, emissione e/o rilascio di sostanze pericolose: NPD

8. Documentazione tecnica appropriata e/o documentazione tecnica specifica: **–**

La prestazione del prodotto sopra identificato è conforme all'insieme delle prestazioni dichiarate. La presente dichiarazione di prestazione è emessa, in conformità al regolamento (UE) n. 305/2011, sotto la sola responsabilità del fabbricante sopra identificato.

Firmato a nome e per conto del fabbricante da:

i.V.

Dr. Christian Weber, Responsabile dello Sviluppo

Dieter Pfaff, Capo della Federazione Internazionale della Produzione e Gestione della Qualità

Tumlingen, 2026-10-01

Questa Dichiarazione di Prestazione (DoP) è stata preparata in varie lingue. In caso di contestazioni sull'interpretazione, prevarrà sempre la versione inglese.
L'Appendice include informazioni volontarie e complementari in lingua inglese che superano i requisiti di legge (lingua specificata in modo neutrale).

Translation guidance Essential Characteristics and Performance Parameters for Annexes

**Guida alla traduzione delle Caratteristiche Essenziali e dei Parametri di Prestazione per gli Annessi**

| | | |
|---|---|---|
| Mechanical resistance and stability (BWR 1)<br>**Resistenza meccanica e stabilità (BWR 1)** | | |
| Characteristic resistance to tension load (static and quasi-static loading):<br>**Resistenza caratteristica al carico di tensione (carico statico e quasi-statico):** | | |
| 1 | Resistance to steel failure:<br>**Resistenza alla rottura dell'acciaio:** | $N_{Rk,s}$ [kN] |
| 2 | Resistance to combined pull- out and concrete cone failure:<br>**Resistenza alla rottura del calcestruzzo combinata con sfilamento:** | $\tau_{Rk}$ and/or $\tau_{Rk,100}$ [N/mm$^2$],<br>$\psi_c$, $\psi^0_{sus}$, $\psi_{sus,100}$ [-] (BF) |
| | Resistance to pull-out failure:<br>**Resistenza alla rottura per sfilamento:** | $N_{Rk,p}$ and/or $N_{Rk,p,100}$ [kN], $\psi_c$ [-] (BEF) |
| 3 | Resistance to concrete cone failure:<br>**Resistenza alla rottura del cono di calcestruzzo:** | $c_{cr,N}$ [mm], $k_{cr,N}$, $k_{ucr,N}$ [-] |
| 4 | Edge distance to prevent splitting under load:<br>**Distanza dal bordo per evitare lo splitting sotto carico:** | $c_{cr,sp}$ [mm] |
| 5 | Robustness:<br>**Robustezza:** | $\gamma_{inst}$ [-] |
| 6 | Maximum installation torque:<br>**Massima coppia di installazione:** | max $T_{inst}$ [Nm] (BF) |
| | Installation torque:<br>**Coppia di installazione:** | $T_{inst}$ [Nm] (BEF) |
| 7 | Minimum edge distance,spacing and member thickness:<br>**Distanza dal bordo e interassi minimi, Spessore dell'elemento:** | $c_{min}$, $s_{min}$, $h_{min}$ [mm] |
| Characteristic resistance to shear load (static and quasi-static loading):<br>**Resistenza caratteristica al carico di taglio (carico statico e quasi statico):** | | |
| 8 | Resistance to steel failure:<br>**Resistenza alla rottura dell'acciaio:** | $V^0_{Rk,s}$ [kN], $M^0_{Rk,s}$ [Nm], $k_7$ [-] |
| 9 | Resistance to pry-out failure:<br>**Resistenza alla rottura per pry-out:** | $k_8$ [-] |
| 10 | Resistance to concrete edge failure:<br>**Resistenza alla rottura del bordo di calcestruzzo:** | $d_{nom}$, $l_f$ [mm] |
| Displacements under short-term and long-term loading:<br>**Spostamenti con carichi a breve e a lungo termine:** | | |
| 11 | Displacements factors under short-term and long-term loading:<br>**Spostamenti con carichi a breve e a lungo termine:** | $\delta_0$, $\delta_\infty$ [mm/(N/mm$^2$)] or [mm/kN] |
| 12 | Resistance in steel fibre reinforced concrete:<br>**Resistenza nel calcestruzzo rinforzato con fibre d'acciaio:** | Description |
| Characteristic resistance and displacements for seismic performance categories C1 and C2:<br>**Resistenza e spostamenti caratteristici per le categorie di prestazione sismica C1 e C2:** | | |
| 13 | Resistance to tension for seismic performance category C1<br>**Resistenza al carico di trazione, categoria C1:** | $N_{Rk,s,C1}$ [kN] (all)<br>$\tau_{Rk,C1}$ [N/mm$^2$] (BF)<br>$N_{Rk,p,C1}$ [kN] (BEF) |
| 14 | Resistance to tension and displacements for seismic performance category C2<br>**Resistenza al carico di trazione, categoria C2:** | $N_{Rk,s,C2}$ [kN] (all)<br>$\tau_{Rk,C2}$ [N/mm$^2$] (BF)<br>$N_{Rk,p,C2}$ [kN] (BEF)<br>$\delta_{N,C2(50\%)}$, $\delta_{N,C2(100\%)}$ [mm] (all) |
| 15 | Resistance to shear for seismic performance category C1<br>**Resistenza al carico di taglio, categoria C1:** | $V_{Rk,s,C1}$ [kN] (all) |
| 16 | Resistance to shear load and displacements for seismic performance category C2<br>**Resistenza al carico di taglio, categoria C2:** | $V_{Rk,s,C2}$ [kN] (all)<br>$\delta_{V,C2(50\%)}$, $\delta_{V,C2(100\%)}$ [mm] (all) |
| Safety in case of fire (BWR 2)<br>**Sicurezza in caso di incendio (BWR 2)** | | |
| 17 | Reaction to fire<br>**Reazione al fuoco:** | Class<br>Classe (A1) |
| Resistance to fire<br>**Resistenza al fuoco:** | | |
| 18 | Fire resistance to steel failure (tension load):<br>**Resistenza al fuoco alla rottura dell'acciaio (carico di trazione):** | $N_{Rk,s,fi}$ [kN] |
| 19 | Bond resistance under fire conditions:<br>**Resistenza al legame in condizioni di incendio:** | $k_{fi,p}$ ($\theta$) [-],<br>$\tau_{Rk,fi}$ ($\theta$) [N/mm$^2$] (BF) |
| 20 | Fire resistance to steel failure under shear loading:<br>**Resistenza la fuoco alla rottura dell'acciaio (carico di taglio):** | $V_{Rk,s,fi}$ [kN], $M^0_{Rk,s,fi}$ [Nm] |
| Hygiene, health and the environment (BWR 3)<br>**Igiene, salute e ambiente (BWR 3)** | | |
| 21 | Content, emission and/or release of dangerous substances:<br>**Contenuto, emissione e/o rilascio di sostanze pericolose:** | Description/Level |

## Specific parts

### 1. Technical description of the product

The fischer injection system FIS VB for uncracked concrete is a bonded anchor consisting of a cartridge with injection mortar and a steel element. The steel element is galvanized or stainless steel threaded rod.

The steel element is placed into a drilled hole filled with injection mortar and is anchored via the bond between metal part, injection mortar and concrete.

The illustration and the description of the product are given in Annex A.

### 2. Specification of the intended use in accordance with the applicable European Assessment Document (hereinafter EAD)

The performances given in Section 3 are only valid if the anchor is used in compliance with the specifications and conditions given in Annex B.

The provisions made in this European Technical Assessment are based on an assumed working life of the anchor of at least 50 years. The indications given on the working life cannot be interpreted as a guarantee given by the producer, but are to be regarded only as a means for choosing the products in relation to the expected economically reasonable working life of the works.

### 3. Performance of the product and references to the methods used for its assessment

#### 3.1 Mechanical resistance and stability (BWR 1)

| Essential characteristic | Performance |
|---|---|
| Characteristic resistance to tension load (static and quasi-static loading) | Annex C1 to C4 |
| Characteristic resistance to shear load (static and quasi-static loading) | Annex C1 to C3 |
| Displacements under short term and long term loading | Annex C5 |
| Characteristic resistance and displacements for seismic performance categories C1 and C2 | No performance assessed |

#### 3.2 Safety in case of fire (BWR 2)

| Essential characteristic | Performance |
|---|---|
| Reaction to fire | Satisfy the requirements for performance class A1 |
| Resistance to fire | No performance assessed |

#### 3.3 Hygiene, health and environment (BWR 3)

No performance assessed.

### 4. Assessment and verification of constancy of performance (hereinafter AVCP) system applied, with reference to its legal base

According to the Decision 96/582/EC of the European Commission the system of assessment verification of constancy of performance (see Annex IX to Regulation (EU) 2024/3110) is system 1.

## Installation conditions part 1

**fischer Anchor rod FIS A / RG (Anchor rod) and commercial standard Threaded rod (Threaded rod)**

**Pre-positioned installation**

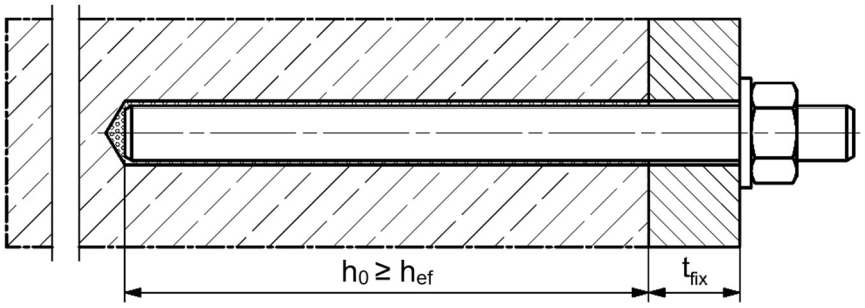


**Push-through installation** (annular gap filled with mortar)

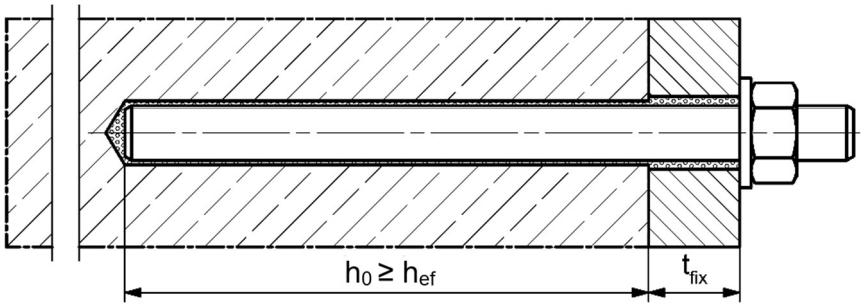


**Pre-positioned or push-through installation with subsequently injected fischer filling disc**
(annular gap filled with mortar)

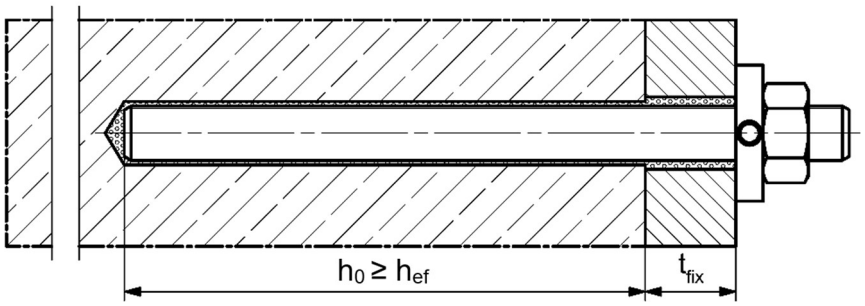


Figures not to scale

$h_0$ = drill hole depth

$h_{ef}$ = effective embedment depth

$t_{fix}$ = thickness of fixture

## Installation conditions part 2

**fischer internal threaded anchor FIS IG (fischer FIS IG)**

**Pre-positioned installation**

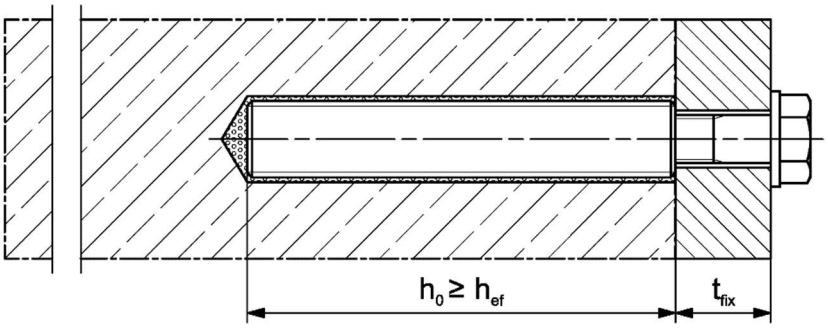


**Pre-positioned installation with subsequently injected fischer filling disc (**annular gap filled with mortar**)**

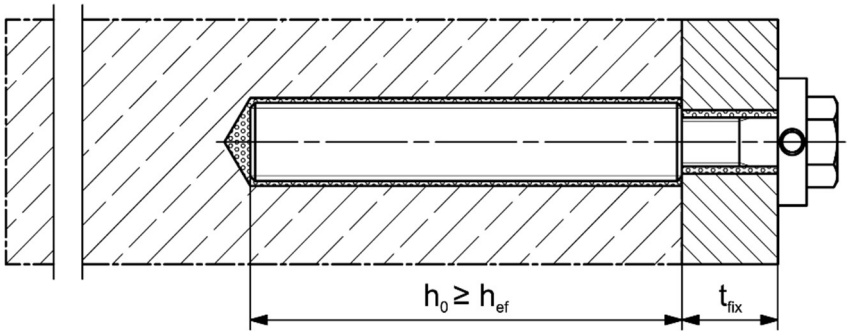


Figures not to scale

$h_0$ = drill hole depth

$h_{ef}$ = effective embedment depth

$t_{fix}$ = thickness of fixture

## Overview system components part 1

**Injection cartridge (shuttle cartridge) with sealing cap; Sizes: 360 ml, 825 ml**

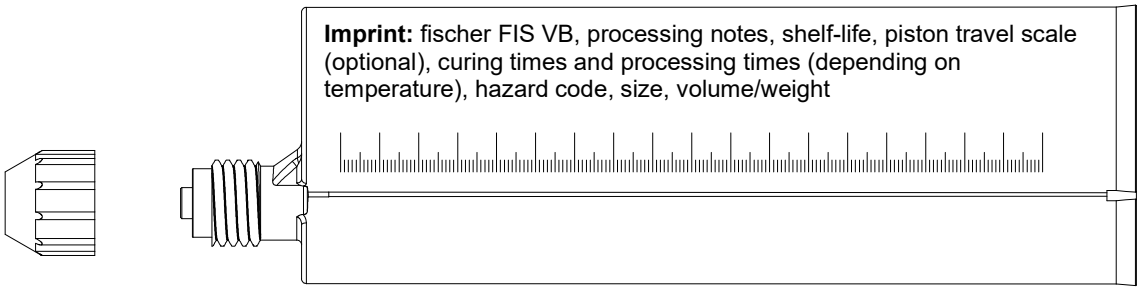


**Injection cartridge (coaxial cartridge) with sealing cap; Sizes: 100 ml, 150 ml, 300 ml, 380 ml, 410 ml**
**Injection cartridge (foilbag cartridge) with sealing cap; Sizes: 100 ml, 150 ml, 300 ml**

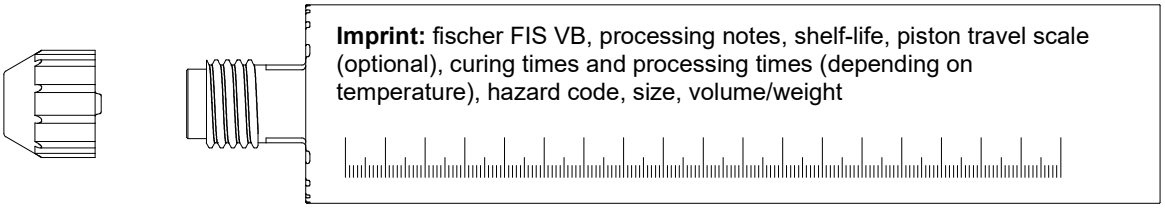


**Static mixer FIS MR Plus for injection cartridges up to 825 ml**

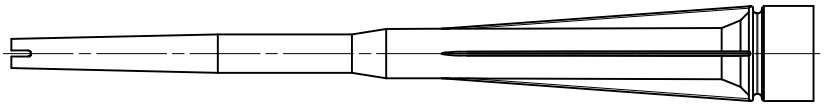

**Static mixer FIS JMR for injection cartridges of 825 ml**

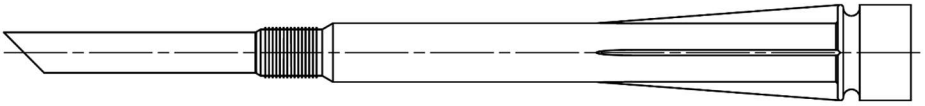

**Injection adapter and extension tube Ø 9 for static mixer FIS MR Plus;**
**Injection adapter and extension tube Ø 9 or Ø 15 for static mixer FIS JMR**

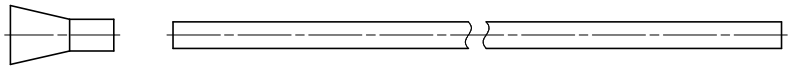

**Cleaning brush BS**

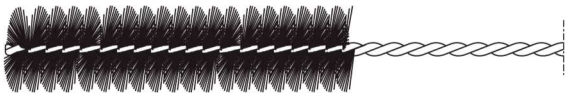

**Blow-out pump AB G**

**Compressed-air cleaning tool ABP**

Figures not to scale

## Overview system components part 2

**Anchor rod / Threaded rod**
Size: M8, M10, M12, M16, M20

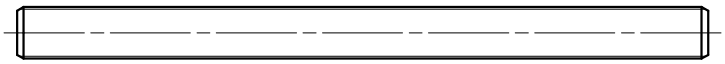

**fischer FIS IG**
Size: M5, M6, M8, M10, M12

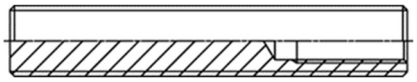

**Screw / Anchor rod / Threaded rod / washer / hexagon nut**

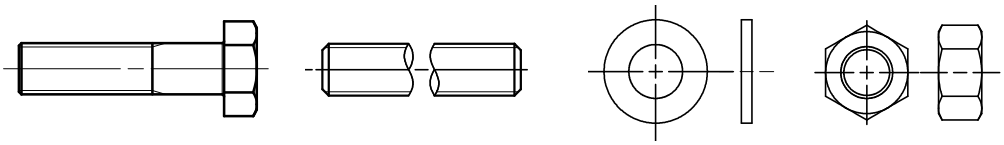

**fischer filling disc with injection adapter**

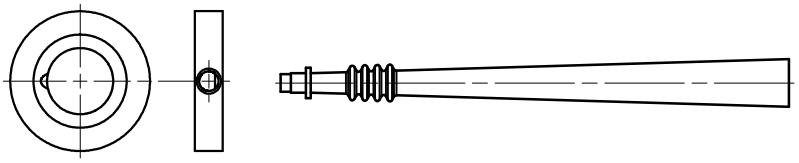

**fischer centering clip DD-S / DD-E**

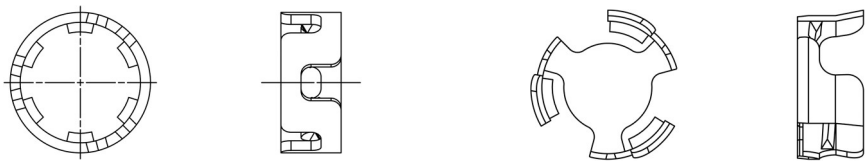

Figures not to scale

fischer injection system FIS VB

**Product description**
Overview system components part 2; metal parts, fischer centering clip, injection adapter

**Annex A4**

## Table A5.1: Materials

| Part | Designation | Material | | |
|---|---|---|---|---|
| 1 | Injection cartridge | Mortar, hardener, filler | | |
| | Steel grade | Steel<br>zinc plated (zp, hdg) | Stainless steel R<br>EN 10088-1 Corrosion resistance class CRC III<br>EN 1993-1-4 | High corrosion resistant steel HCR<br>EN 10088-1 Corrosion resistance class CRC V<br>EN 1993-1-4 |
| 2 | Anchor rod / Threaded rod | Property class 5.8 or 8.8;<br>EN ISO 898-1<br>zp ≥ 5 µm, EN ISO 4042<br>or hot dip galvanised ≥ 40 µm<br>EN ISO 10684<br>$f_{uk}$ ≤ 1000 N/mm$^2$<br>$A_5$ > 8 % fracture elongation | Property class 50, 70 or 80;<br>EN ISO 3506-1<br>1.4401; 1.4404; 1.4578;<br>1.4571; 1.4439; 1.4362;<br>1.4062; 1.4662; 1.4462;<br>EN 10088-1<br>$f_{uk}$ ≤ 1000 N/mm$^2$<br>$A_5$ > 8 % fracture elongation | Property class 50, 70 or 80;<br>EN ISO 3506-1 or<br>property class HCR 70 with<br>$f_{yk}$ ≥ 560 N/mm$^2$;<br>1.4565;1.4529;<br>EN 10088-1<br>$f_{uk}$ ≤ 1000 N/mm$^2$<br>$A_5$ > 8 % fracture elongation |
| 3 | Washer<br>ISO 7089 | zinc plated ≥ 5 µm,<br>EN ISO 4042<br>or hot dip galvanised ≥ 40 µm<br>EN ISO 10684 | 1.4401; 1.4404;<br>1.4578; 1.4571;<br>1.4439; 1.4362;<br>EN 10088-1 | 1.4565; 1.4529;<br>EN 10088-1 |
| 4 | Hexagon nut | Property class 5 or 8<br>EN ISO 898-2<br>zinc plated ≥ 5 µm,<br>EN ISO 4042<br>or hot dip galvanised ≥ 40 µm<br>EN ISO 10684 | Property class 50, 70 or 80<br>EN ISO 3506-2<br>1.4401; 1.4404; 1.4578;<br>1.4571; 1.4439; 1.4362;<br>EN 10088-1 | Property class 50, 70 or 80<br>EN ISO 3506-2<br>1.4565; 1.4529;<br>EN 10088-1 |
| 5 | fischer FIS IG | Property class 5.8<br>EN ISO 898-1<br>zinc plated ≥ 5 µm,<br>EN ISO 4042 | Property class 70<br>EN ISO 3506-1;<br>1.4401; 1.4404; 1.4578;<br>1.4571; 1.4439; 1.4362;<br>EN 10088-1 | Property class 70<br>EN ISO 3506-1<br>1.4565; 1.4529;<br>EN 10088-1 |
| 6 | Commercial standard screw or Anchor rod / Threaded rod for fischer FIS IG | Property class 5.8 or 8.8;<br>EN ISO 898-1<br>zinc plated ≥ 5 µm,<br>EN ISO 4042<br>$A_5$ > 8 % fracture elongation | Property class 70<br>EN ISO 3506-1<br>1.4401; 1.4404; 1.4578;<br>1.4571; 1.4439; 1.4362;<br>EN 10088-1<br>$A_5$ > 8 % fracture elongation | Property class 70<br>EN ISO 3506-1<br>1.4565; 1.4529;<br>EN 10088-1<br>$A_5$ > 8 % fracture elongation |
| 7 | fischer filling disc similar to DIN 6319-G | zinc plated ≥ 5 µm,<br>EN ISO 4042<br>or hot dip galvanised ≥ 40 µm<br>EN ISO 10684 | 1.4401; 1.4404; 1.4578;<br>1.4571; 1.4439; 1.4362;<br>EN 10088-1 | 1.4565;1.4529;<br>EN 10088-1 |

## Specifications of intended use part 1

**Table B1.1:** Overview use and performance categories

| | | FIS VB with … | | | |
|---|---|---|---|---|---|
| | | Anchor rod<br>Threaded rod<br> | | fischer FIS IG<br> | |
| Hammer drilling with standard drill bit  | | all sizes | | | |
| Static and quasi static load, in | uncracked concrete | all sizes | Tables:<br>C1.1<br>C3.1<br>C4.1<br>C5.1 | all sizes | Tables:<br>C2.1<br>C3.1<br>C4.1<br>C5.1 |
| Use category I1 | dry or wet concrete | all sizes | | | |
| Installation direction | | D3 (downward and horizontal and upwards (e.g. overhead) installation) | | | |
| Installation temperature | | $T_{i,min}$ = 0 °C to $T_{i,max}$ = +40 °C | | | |
| In-service temperature | Temperature range I | -40 °C to +40 °C | (max. short term temperature +40 °C ; max. long term temperature +24 °C) | | |
| | Temperature range II | -40 °C to +80 °C | (max. short term temperature +80 °C ; max. long term temperature +50 °C) | | |

## Specifications of intended use part 2

**Base materials:**

- Compacted reinforced or unreinforced normal weight concrete without fibres of strength classes C20/25 to C50/60 according to EN 206.

**Use conditions (Environmental conditions):**

- Fastener intended for use in structures subject to dry, internal conditions (all materials).
- For all other conditions according to EN 1993-1-4 corresponding to corrosion resistance classes to **Annex A5 Table A5.1**.

**Design:**

- Fastenings are designed in accordance with EN 1992-4.
- The structural design is conducted under responsibility of a designer experienced in the field of anchorages and concrete works.
- Verifiable calculation notes and drawings are to be prepared taking account of the loads to be anchored. The position of the fastener is indicated on the design drawings (e.g. position of the fastener relative to reinforcement or to supports, etc.).

**Installation:**

- Fastener installation is to be carried out by appropriately qualified personnel and under the supervision of the person responsible for technical matters of the site.
- Fastening depth should be marked and adhered to installation.
- Overhead installation is allowed (necessary equipment see installation instruction).

## Table B3.1: Installation parameters for **Anchor rods / Threaded rods**

| Anchor rods / Threaded rods | | | Thread | M8 | M10 | M12 | M16 | M20 |
|---|---|---|---|---|---|---|---|---|
| Nominal drill hole diameter | | $d_0$ | [mm] | 10 | 12 | 14 | 18 | 24 |
| Drill hole depth | | $h_0$ [2)] | | $h_0 \geq h_{ef}$ | | | | |
| Effective embedment depth | | $h_{ef,\,min}$ | | 60 | 60 | 70 | 80 | 90 |
| | | $h_{ef,\,max}$ | | 160 | 200 | 240 | 320 | 400 |
| Simplified spacing and edge distance[1)] | | s = c | | 40 | 45 | 55 | 65 | 85 |
| Maximum diameter of the clearance hole of the fixture | pre-positioned installation | $d_f$ | | 9 | 12 | 14 | 18 | 22 |
| | push-through installation | $d_f$ | | 12 | 14 | 16 | 20 | 26 |
| Minimum thickness of concrete member | | $h_{min}$ | | $h_{ef}$ + 30 (≥ 100) | | | $h_{ef}$ + $2d_0$ | |
| Maximum installation torque | | max $T_{inst}$ | [Nm] | 10 | 20 | 40 | 60 | 120 |

1) Detailed calculation according to **Annex B5 and B6**.

2) When using centering clips DD-S / DD-E, observe the deviating specifications as specified in **Table B8.1.**

**Anchor rod / Threaded rod**

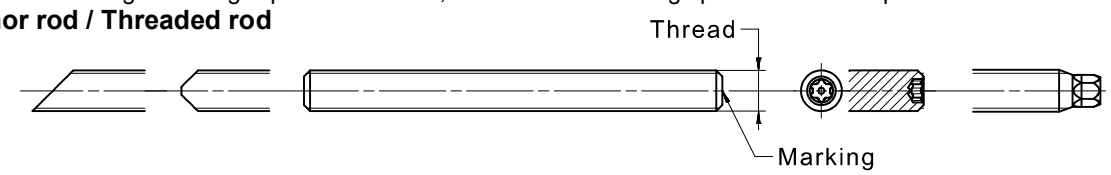


**Marking (on random place) fischer Anchor rod:**

| | | | |
|---|---|---|---|
| Steel zinc plated PC[1)] 8.8 | ● or **+** | Steel hot-dip PC[1)] 8.8 | ● |
| High corrosion resistant steel HCR PC[1)] 50 | ● | High corrosion resistant steel HCR PC[1)] 70 | **-** |
| High corrosion resistant steel HCR PC[1)] 80 | ( | Stainless steel R property class 50 | **~** |
| Stainless steel R property class 80 | ∗ | | |
| Alternatively: Colour coding according to DIN 976-1 | | [1)] PC = property class | |

**Installation conditions:**

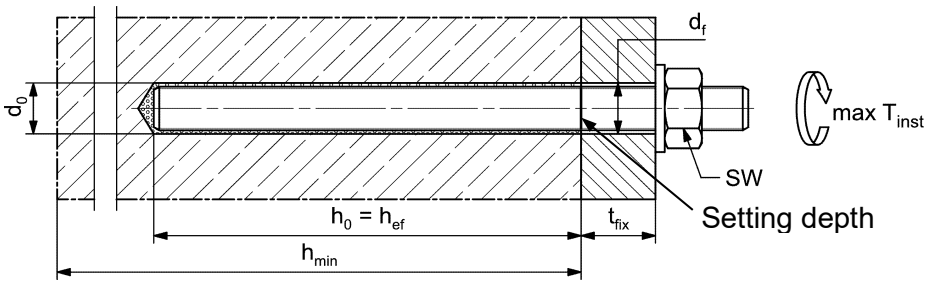


**Threaded rods, washers and hexagon nuts may also be used if the following requirements are fulfilled:**

- Materials, dimensions and mechanical properties according to **Annex A5, Table A5.1.**
- Inspection certificate 3.1 according to EN 10204:2004, the documents have to be stored.
- Setting depth is marked.
- Hot-dip galvanized steel
  Steel load-bearing capacities for hot-dip galvanised parts are only valid if the threaded rod and nut are correctly paired. The strength class of the nut must be one strength class higher than that of the threaded rod (≥ M12 in combination with tolerance class 6AX in accordance with EN ISO 10684 two strength classes higher). The pairing of undersized threaded rods (additional designation U according to EN ISO 10684) with oversized nuts (additional designation Z or X according to EN ISO 10684) is not permitted under any circumstances.

Figures not to scale

**Table B4.1:** Installation parameters for **fischer FIS IG**

| fischer FIS IG | | Thread | M5 | M6 | M8 | M10 | M12 |
|---|---|---|---|---|---|---|---|
| Diameter of anchor | $d_{nom} = d_H$ | | 8 | 10 | 12 | 16 | 20 |
| Nominal drill hole diameter | $d_0$ | | 10 | 12 | 14 | 18 | 24 |
| Drill hole depth | $h_0$ 2) | | $h_0 \geq h_{ef} = L_H$ | | | | |
| Effective embedment depth ($h_{ef} = L_H$) | $h_{ef,\,min}$ | | 60 | 60 | 70 | 80 | 90 |
| | $h_{ef,\,max}$ | | 160 | 200 | 240 | 320 | 400 |
| Simplified spacing and edge distance 1) | s = c | [mm] | 40 | 45 | 55 | 65 | 85 |
| Diameter of the clearance hole in the fixture | $d_f$ | | 6 | 7 | 9 | 12 | 14 |
| Minimum thickness of concrete member | $h_{min}$ 1) | | $h_{ef}$ + 30 (≥ 100) | | | $h_{ef} + 2d_0$ | |
| Maximum screw-in depth | $l_{E,max}$ | | 18 | 18 | 20 | 25 | 30 |
| Minimum screw-in depth | $l_{E,min}$ | | 8 | 8 | 10 | 12 | 14 |
| Maximum installation torque | max $T_{inst}$ | [Nm] | 5 | 5 | 10 | 20 | 40 |

1) Detailed calculation according to **Annex B5 and B6**.

2) When using centering clips DD-S / DD-E, observe the deviating specifications as specified in **Table B8.1.**

**fischer FIS IG**

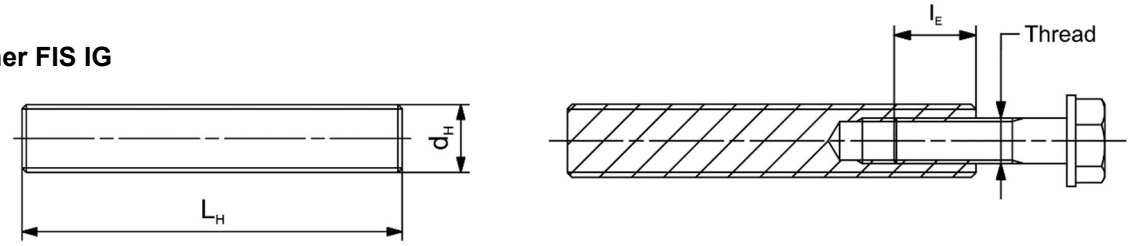


**Marking (at any location):**

High corrosion resistant steel HCR property class 70 -

Bolts or threaded rods (including nut and washer) must comply with the relevant material and strength class as specified in **Annex A5**, **Table A5.1.**

**Installation conditions:**

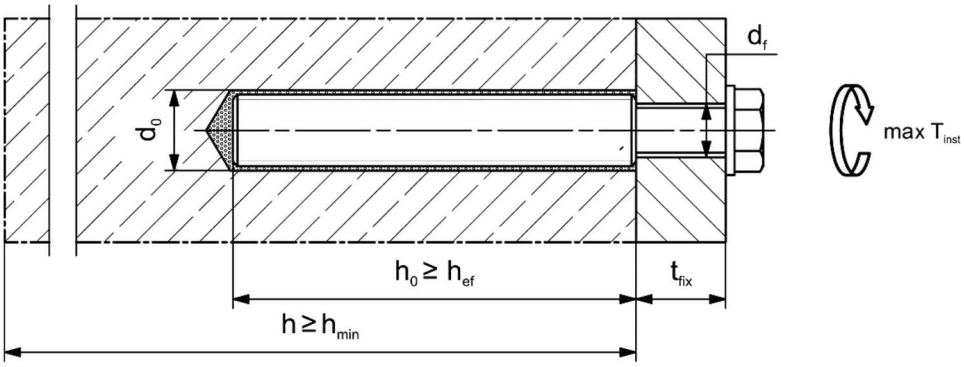


Figures not to scale

**Table B5.1:** Minimum spacing and minimum edge distance for **Anchor rods / Threaded rods** and **fischer FIS IG**

| **Anchor rods / Threaded rods** | | | **M8** | | **M10** | **-** | **M12** | **-** | **M16** | **-** | **M20** | **-** |
|---|---|---|---|---|---|---|---|---|---|---|---|---|
| **fischer FIS IG** | | | **-** | **M5** | **-** | **M6** | **-** | **M8** | **-** | **M10** | **-** | **M12** |
| **Minimum edge distance** | | | | | | | | | | | | |
| Uncracked concrete | $c_{min}$ | [mm] | 40 | 40 | 45 | 45 | 45 | 45 | 50 | 50 | 55 | 55 |
| Minimum spacing | s | | according to **Annex B6** | | | | | | | | | |
| **Minimum spacing** | | | | | | | | | | | | |
| Uncracked concrete | $s_{min}$ | [mm] | 40 | 40 | 45 | 45 | 55 | 55 | 65 | 65 | 85 | 85 |
| Minimum edge distance | c | | according to **Annex B6** | | | | | | | | | |
| **Required projecting area** | | | | | | | | | | | | |
| Uncracked concrete≥C20/25 | $A_{sp,req}$ | [1000 mm²] | 8,0 | 3,5 | 13,0 | 3,5 | 22,0 | 5,5 | 24,0 | 8,0 | 38,5 | 13,0 |

**Splitting failure** for minimum edge distance and spacing in dependence of the effective embedment depth $h_{ef}$.

For the calculation of minimum spacing and minimum edge distance of anchors in combination with different embedment depths and thicknesses of concrete members the following equation shall be fulfilled:

$$\mathbf{A_{sp,req} < A_{sp,t}}$$

$A_{sp,req}$ = required projecting area
$A_{sp,t}$ = projecting area (according to **Annex B6**)

**Table B6.1:** **Projecting area $A_{sp,t}$** with concrete member thickness $h > h_{ef} + 1{,}5 \cdot c$ and $h \geq h_{min}$

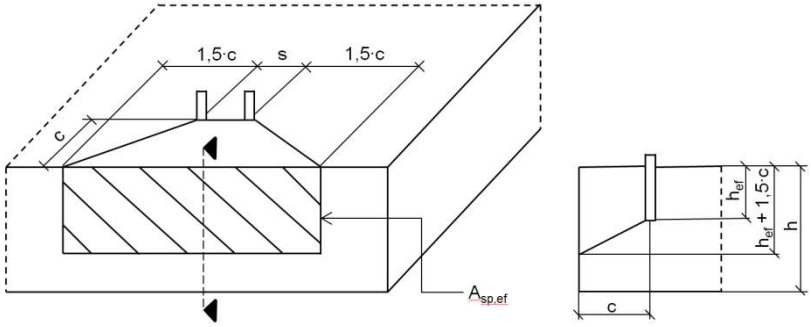


| | | | |
|---|---|---|---|
| Single fastener | $A_{sp,t} = (3 \cdot c) \cdot (h_{ef} + 1{,}5 \cdot c)$ | [mm²] | with $c \geq c_{min}$ |
| Group of fastener with $s > 3 \cdot c$ | $A_{sp,t} = (6 \cdot c) \cdot (h_{ef} + 1{,}5 \cdot c)$ | [mm²] | |
| Group of fastener with $s \leq 3 \cdot c$ | $A_{sp,t} = (3 \cdot c + s) \cdot (h_{ef} + 1{,}5 \cdot c)$ | [mm²] | with $c \geq c_{min}$ and $s \geq s_{min}$ |

**Table B6.2:** **Projecting area $A_{sp,t}$** with concrete member thickness $h > h_{ef} + 1{,}5 \cdot c$ and $h \geq h_{min}$

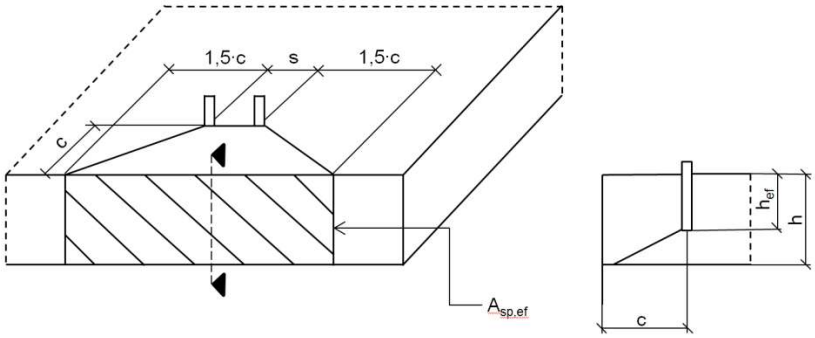


| | | | |
|---|---|---|---|
| Single fastener | $A_{sp,t} = 3 \cdot c \cdot$ existing h | [mm²] | with $c \geq c_{min}$ |
| Group of fastener with $s > 3 \cdot c$ | $A_{sp,t} = 6 \cdot c \cdot$ existing h | [mm²] | |
| Group of fastener with $s \leq 3 \cdot c$ | $A_{sp,t} = (3 \cdot c + s) \cdot$ existing h | [mm²] | with $c \geq c_{min}$ and $s \geq s_{min}$ |

Edge distance and axial spacing shall be rounded up to at least 5 mm.

Figures not to scale

**Table B7.1:** Parameters of the **cleaning brush** BS (steel brush with steel bristles)

The size of the cleaning brush refers to the drill hole diameter

| | | | | | | | |
|---|---|---|---|---|---|---|---|
| Nominal drill hole diameter | $d_0$ | [mm] | 10 | 12 | 14 | 18 | 24 |
| Steel brush diameter BS | $d_b$ | | 11 | 14 | 16 | 20 | 26 |

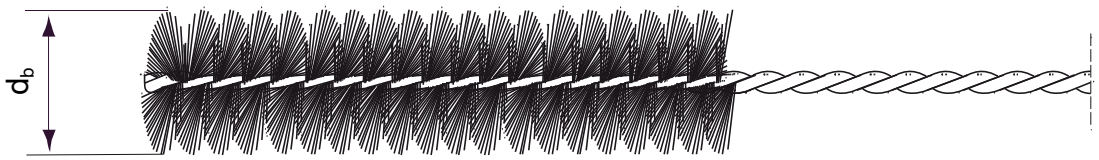


**Table B7.2:** **Maximum processing** time of the mortar and **minimum curing** time

(During the curing time of the mortar the concrete temperature may not fall below the listed minimum temperature)

| Temperature at anchoring base [°C] | Maximum processing time $t_{work}$ | Minimum curing time [1] $t_{cure}$ |
|---|---|---|
| > 0 to 5 [2] | 13 min | 3 h |
| > 5 to 10 | 9 min | 90 min |
| > 10 to 20 | 5 min | 60 min |
| > 20 to 30 | 3 min | 45 min |
| > 30 to 40 | 2 min | 35 min |

[1] In wet concrete the curing times must be doubled.
[2] Minimum cartridge temperature +5°C

**Table B7.3:** Conditions for use of **static mixer** without an **extension tube**

| | | | | | | | |
|---|---|---|---|---|---|---|---|
| Nominal drill hole diameter | $d_0$ | [mm] | 10 | 12 | 14 | 18 | 24 |
| Drill hole depth $h_0$ by using | FIS MR Plus | | ≤90 | | ≤120 | ≤150 | ≤190 |
| | FIS JMR | | - | - | ≤90 | ≤180 | ≤220 |

Figures not to scale

**Table B8.1:** Parameters of the **fischer centering clip DD-S / DD-E**

| **Anchor rods / Threaded rods** | | | **M12** | **M16** | **M20** |
|---|---|---|---|---|---|
| **fischer FIS IG** | | | **M8** | **M10** | **M12** |
| **fischer centering clip DD-S / DD-E** | | | **M12** | **M16** | **M20** |
| fischer centering clip DD-S | $h_{DD-S}$ | [mm] | 6,5 | 8,0 | 9,0 |
| fischer centering clip DD-E | $h_{DD-E}$ | [mm] | 12,0 | 13,5 | 18,0 |
| Drill hole depth | $h_0$ | [mm] | $h_0 \geq h_{nom} + 3$ mm | | |
| Overall fastener embedment depth | $h_{nom}$ | [mm] | $h_{nom} \leq h_{ef,max}$ | | |
| Minimum thickness of concrete member | $h_{min}$ | [mm] | $h_{nom} + 30$ ($\geq 100$) | $h_{nom} + 2d_0$ | |

The uppermost DD-S clip should be positioned approx. 5 - 10 mm below the concrete surface.
The effective embedment depth $h_{ef}$ is calculated as follows when using the DD-S / DD-E clips.

$$\mathbf{h_{ef} = h_{nom} - h_{DD-E} - n \cdot h_{DD-S}}$$

n = number of DD-S clips used

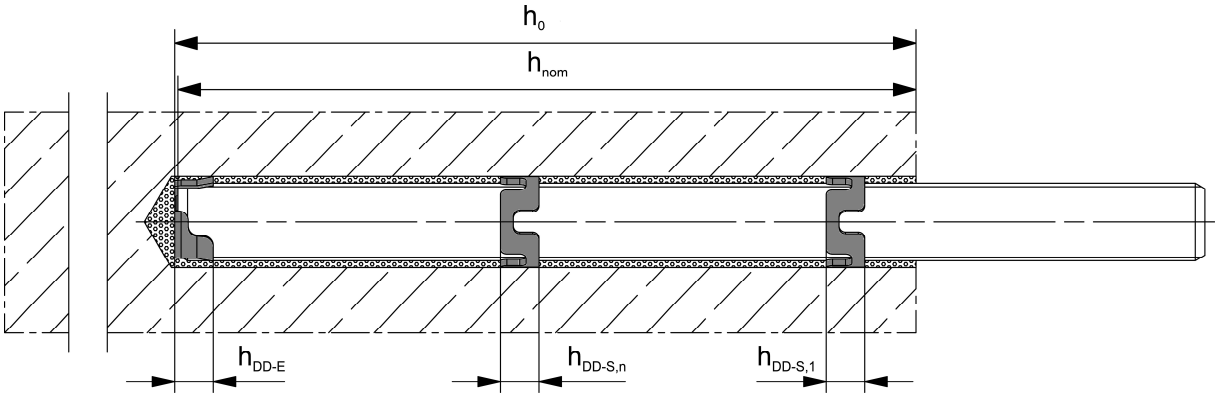


Figures not to scale

## Installation instructions part 1

Drilling and cleaning the hole (hammer drilling with standard drill bit)

| | | | | |
|---|---|---|---|---|
| **1** | 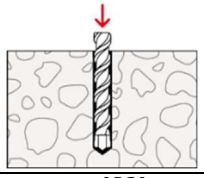 | Drill the hole.<br>Nominal drill hole diameter $\mathbf{d_0}$ and drill hole depth $\mathbf{h_0}$<br>see **Tables B3.1 or B4.1**. | | |
| **2** | 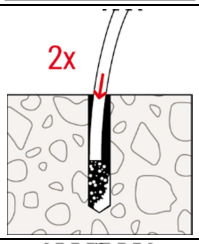 | Clean the drill hole:<br>For $h_{ef} \leq 12d_{nom}$ and<br>$d_0 < 18$ mm<br>blow out the hole twice by hand. | 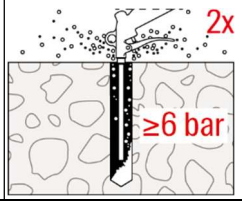 | For $h_{ef} > 12d_{nom}$ and / or<br>$d_0 \geq 18$ mm blow out the hole twice with oil-free compressed air ($p \geq 6$ bar).<br>Use suitable compressed-air nozzle |
| **3** | 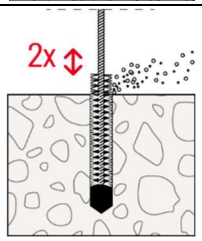 | Brush the drill hole twice.<br>For deep holes use an extension. Use suitable brushes (see **Table B7.1**). | | |
| **4** | 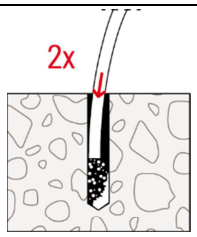 | Clean the drill hole:<br>For $h_{ef} \leq 12d_{nom}$ and<br>$d_0 < 18$ mm<br>blow out the hole twice by hand. | 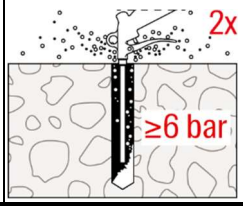 | For $h_{ef} > 12d_{nom}$ and / or<br>$d_0 \geq 18$ mm blow out the hole twice with oil-free compressed air ($p \geq 6$ bar).<br>Use suitable compressed-air nozzle. |

Go to step 5

## Installation instructions part 2

### Preparing the cartridge

| | | |
|---|---|---|
| **5** | 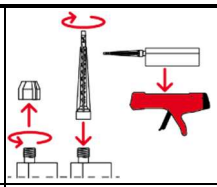 | Remove the sealing cap<br>Screw on the static mixer<br>Place the cartridge into the dispenser |
| **6** | 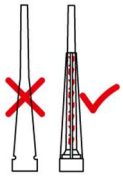 | Ensuring that the spiral inside the mixer is clearly visible. |
| **7** | 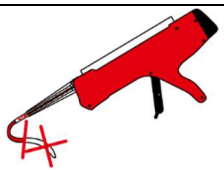 | Extrude approximately 10 cm of material out until the resin is evenly grey in colour.<br>Do not use mortar that is not uniformly grey. |

Go to step 8

### Injection of the mortar

| | | |
|---|---|---|
| **8** | 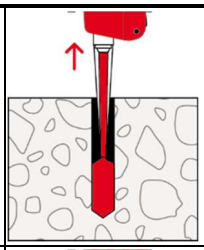 | For $h_0 = h_{ef}$ fill approximately 2/3 of the drill hole with mortar. For $h_0 > h_{ef}$ more mortar is needed. Always begin from the bottom of the hole and avoid bubbles. |
| **9** | 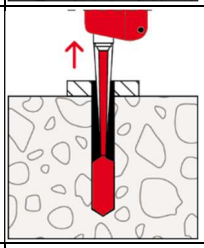 | **Push-through installation:**<br>the drill hole in the fixture must be also filled with mortar. |
| **10** | 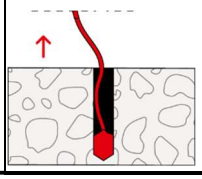 | The conditions for mortar injection without extension tube can be found in **Table B7.3.**<br> 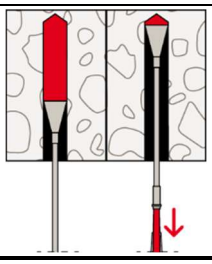 <br>For overhead installation, deep holes ($h_0$ > 250 mm) use an injection-adapter. |

Go to step 11

## Installation instructions part 3

Installation of Anchor rods / Threaded rods and fischer FIS IG

| | | | | |
|---|---|---|---|---|
| **11** | 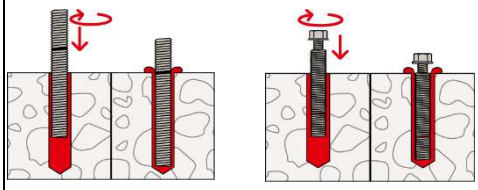 | Only use clean and oil-free metal parts.<br>Push the Anchor rod / Threaded rods with the setting depth mark or fischer FIS IG down to the bottom of the hole, turning it slightly while doing so. No turning movement is permitted when using the DD-S / DD-E centering clips.<br>After inserting the metal parts, excess mortar must be emerged around the anchor element. | | |
| **12** | 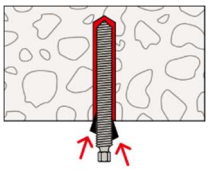 | For overhead installations support the metal part with wedges (e.g. fischer centering wedges or fischer overhead clips). | 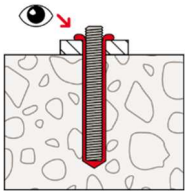 | For push-through installation fill the annular gap with mortar. |
| **13** | 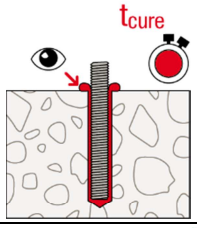 | Wait for the specified curing time $t_{cure}$ see **Table B7.2**.<br>The application with the anchor rod is shown as an example. | **14** 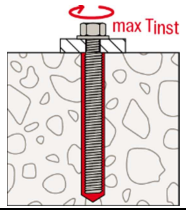 | Mounting the fixture max $T_{inst}$ see **Tables B3.1** and **B4.1**. |
| **Option** | 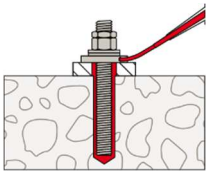 | After the minimum curing time is reached, the gap between metal part and fixture (annular clearance) may be filled with mortar via the fischer filling disc. Compressive strength ≥ 50 N/mm² (e.g. fischer injection mortars FIS VB, FIS HB, FIS SB, FIS V Plus, FIS EM Plus).<br>ATTENTION: Using fischer filling disc reduces $t_{fix}$ (usable length of the Anchor). | | |

**Table C1.1:** Characteristic resistance to **steel failure** under **tension / shear loading** of **Anchor rods** and **Threaded rods**

| Anchor rod / Threaded rod | | | | | M8 | M10 | M12 | M16 | M20 |
|---|---|---|---|---|---|---|---|---|---|
| **Characteristic resistance to steel failure under tension loading** [1] | | | | | | | | | |
| Characteristic resistance $N_{Rk,s}$ | Steel zinc plated | Property class | 5.8 | [kN] | 18,3(16,6) | 29,0(26,8) | 42,1 | 78,5 | 122,5 |
| | | | 8.8 | | 29,2(26,5) | 46,4(42,8) | 67,4 | 125,6 | 196,0 |
| | Stainless steel R and high corrosion resistant steel HCR | | 50 | | 18,3 | 29,0 | 42,1 | 78,5 | 122,5 |
| | | | 70 | | 25,6 | 40,6 | 59,0 | 109,9 | 171,5 |
| | | | 80 | | 29,2 | 46,4 | 67,4 | 125,6 | 196,0 |
| **Partial factors** [2] | | | | | | | | | |
| Partial factor $\gamma_{Ms,N}$ | Steel zinc plated | Property class | 5.8 | [-] | 1,50 | | | | |
| | | | 8.8 | | 1,50 | | | | |
| | Stainless steel R and high corrosion resistant steel HCR | | 50 | | 2,86 | | | | |
| | | | 70 | | 1,87 / fischer HCR: 1,50 [3] | | | | |
| | | | 80 | | 1,60 | | | | |
| **Characteristic resistance to steel failure under shear loading** [1] | | | | | | | | | |
| **without lever arm** | | | | | | | | | |
| Characteristic resistance $V^0_{Rk,s}$ | Steel zinc plated | Property class | 5.8 | [kN] | 10,9(9,9) | 17,4(16,0) | 25,2 | 47,1 | 73,5 |
| | | | 8.8 | | 14,6(13,2) | 23,2(21,4) | 33,7 | 62,8 | 98,0 |
| | Stainless steel R and high corrosion resistant steel HCR | | 50 | | 9,1 | 14,5 | 21,0 | 39,2 | 61,2 |
| | | | 70 | | 12,8 | 20,3 | 29,5 | 54,9 | 85,7 |
| | | | 80 | | 14,6 | 23,2 | 33,7 | 62,8 | 98,0 |
| Ductility factor | | | $k_7$ | [-] | 1,0 | | | | |
| **with lever arm** | | | | | | | | | |
| Characteristic resistance $M^0_{Rk,s}$ | Steel zinc plated | Property class | 5.8 | [Nm] | 18,7(16,1) | 37,3(33,2) | 65,4 | 166,2 | 324,6 |
| | | | 8.8 | | 29,9(25,9) | 59,8(53,1) | 104,6 | 265,9 | 519,3 |
| | Stainless steel R and high corrosion resistant steel HCR | | 50 | | 18,7 | 37,3 | 65,4 | 166,2 | 324,6 |
| | | | 70 | | 26,2 | 52,3 | 91,5 | 232,6 | 454,4 |
| | | | 80 | | 29,9 | 59,8 | 104,6 | 265,9 | 519,3 |
| **Partial factors** [2] | | | | | | | | | |
| Partial factor $\gamma_{Ms,V}$ | Steel zinc plated | Property class | 5.8 | [-] | 1,25 | | | | |
| | | | 8.8 | | 1,25 | | | | |
| | Stainless steel R and high corrosion resistant steel HCR | | 50 | | 2,38 | | | | |
| | | | 70 | | 1,56 / fischer HCR: 1,25 [3] | | | | |
| | | | 80 | | 1,33 | | | | |

[1] Values in brackets are valid for undersized threaded rods with smaller stress area $A_s$ for hot dip galvanised threaded rods according to EN ISO 10684.
[2] In absence of other national regulations.
[3] Only admissible for high corrosion resistant steel HCR, acc. to **Table A5.1**.

**Table C2.1:** Characteristic resistance to **steel failure** under **tension / shear loading** of **fischer FIS IG**

| **fischer FIS IG** | | | | | **M5** | **M6** | **M8** | **M10** | **M12** |
|---|---|---|---|---|---|---|---|---|---|
| **Characteristic resistance to steel failure under tension loading** | | | | | | | | | |
| Characteristic resistance with Screw or Threaded / Anchor rod $N_{Rk,s}$ | Steel zinc plated | Property class of Screw or Threaded / Anchor rod | 5.8 | [kN] | 7,1 | 10,1 | 18,3 | 29,0 | 42,1 |
| | | | 8.8 | | 11,4 | 16,1 | 23,0 | 46,4 | 67,4 |
| | Stainless steel R and high corrosion resistant steel HCR | | 70 | | 9,9 | 14,1 | 25,6 | 40,6 | 59,0 |
| **Partial factors** [1] | | | | | | | | | |
| Partial factor $\gamma_{Ms,N}$ | Steel zinc plated | Property class of Screw or Threaded / Anchor rod | 5.8 | [-] | 1,50 | | | | |
| | | | 8.8 | | 1,50 | | | | |
| | Stainless steel R and high corrosion resistant steel HCR | | 70 | | 1,87 / fischer HCR: 1,50 [2] | | | | |
| **Characteristic resistance to steel failure under shear loading** | | | | | | | | | |
| **Without lever arm** | | | | | | | | | |
| Characteristic resistance with Screw or Threaded / Anchor rod $V^0_{Rk,s}$ | Steel zinc plated | Property class of Screw or Threaded / Anchor rod | 5.8 | [kN] | 4,3 | 6,0 | 10,9 | 17,4 | 25,2 |
| | | | 8.8 | | 5,7 | 8,0 | 14,6 | 23,2 | 33,7 |
| | Stainless steel R and high corrosion resistant steel HCR | | 70 | | 5,0 | 7,0 | 12,8 | 20,3 | 29,5 |
| Ductility factor | | | $k_7$ | [-] | 1,0 | | | | |
| **With lever arm** | | | | | | | | | |
| Characteristic resistance with Screw or Threaded / Anchor rod $M^0_{Rk,s}$ | Steel zinc plated | Property class of Screw or Threaded / Anchor rod | 5.8 | [Nm] | 4,5 | 7,6 | 18,7 | 37,3 | 65,4 |
| | | | 8.8 | | 7,2 | 12,2 | 29,9 | 59,8 | 104,6 |
| | Stainless steel R and high corrosion resistant steel HCR | | 70 | | 6,3 | 10,7 | 26,2 | 52,3 | 91,5 |
| **Partial factors** [1] | | | | | | | | | |
| Partial factor $\gamma_{Ms,V}$ | Steel zinc plated | Property class of Screw or Threaded / Anchor rod | 5.8 | [-] | 1,25 | | | | |
| | | | 8.8 | | 1,25 | | | | |
| | Stainless steel R and high corrosion resistant steel HCR | | 70 | | 1,56 / fischer HCR: 1,25 [2] | | | | |

[1] In absence of other national regulations.
[2] Only admissible for high corrosion resistant steel HCR, acc. to **Table A5.1**.

## Table C3.1: Characteristic resistance to concrete failure under tension / shear loading

| Anchor rod / Threaded rod | | | M8 | M10 | M12 | M16 | M20 |
|---|---|---|---|---|---|---|---|
| **fischer FIS IG** | | | **M5** | **M6** | **M8** | **M10** | **M12** |
| **Combined pullout and concrete cone failure** | | | | | | | |
| Calculation diameter | d | [mm] | 8 | 10 | 12 | 16 | 20 |
| **Characteristic resistance to concrete failure under tension loading** | | | | | | | |
| Installation factor | $\gamma_{inst}$ | [-] | See annex **C4** | | | | |
| **Factors for the compressive strength of concrete > C20/25** | | | | | | | |
| Increasing factor $\psi_c$ for uncracked concrete $\tau_{Rk\,(X,Y)} = \psi_c \cdot \tau_{Rk\,(C20/25)}$ | C25/30 | [-] | 1,03 | | | | |
| | C30/37 | | 1,06 | | | | |
| | C35/45 | | 1,09 | | | | |
| | C40/50 | | 1,11 | | | | |
| | C45/55 | | 1,13 | | | | |
| | C50/60 | | 1,15 | | | | |
| **Splitting failure** | | | | | | | |
| Edge distance | $h / h_{ef} \geq 2{,}0$ | $c_{cr,sp}$ [mm] | $1{,}0\ h_{ef}$ | | | | |
| | $2{,}0 > h / h_{ef} > 1{,}3$ | | $4{,}6\ h_{ef} - 1{,}8\ h$ | | | | |
| | $h / h_{ef} \leq 1{,}3$ | | $2{,}1\ h_{ef}$ | | | | |
| Spacing | $s_{cr,sp}$ | [mm] | $2\ c_{cr,sp}$ | | | | |
| **Concrete failure** | | | | | | | |
| Uncracked concrete | $k_{ucr,N}$ | [-] | 11,0 | | | | |
| Edge distance | $c_{cr,N}$ | [mm] | $1{,}5\ h_{ef}$ | | | | |
| Spacing | $s_{cr,N}$ | | $2\ c_{cr,N}$ | | | | |
| **Factors for sustained tension loading** | | | | | | | |
| Factor $\Psi^0_{sus}$ for temperature range | 24 °C / 40 °C | [-] | 0,55 | | | | |
| | 50 °C / 80 °C | | 0,55 | | | | |
| **Characteristic resistance to concrete failure under shear loading** | | | | | | | |
| Installation factor | $\gamma_{inst}$ | [-] | 1,0 | | | | |
| **Concrete pry-out failure** | | | | | | | |
| Factor for pry-out failure | $k_8$ | [-] | 2,0 | | | | |
| **Concrete edge failure** | | | | | | | |
| Effective length of fastener in shear loading | $l_f$ | [mm] | for $d_{nom} \leq 24$ mm: min ($h_{ef}$; 12 $d_{nom}$) | | | | |
| **Calculation diameters** | | | | | | | |
| Size | | | M5 | M6 | M8 | M10 | M12 | M16 | M20 |
| Anchor rods and Threaded rods | $d_{nom}$ | [mm] | -[1)] | -[1)] | 8 | 10 | 12 | 16 | 20 |
| fischer FIS IG | $d_{nom}$ | | 8 | 10 | 12 | 16 | 20 | -[1)] | -[1)] |

[1)] Size of Anchor type not part of the assessment

**Table C4.1: Characteristic resistance** to **combined pull-out** and **concrete failure** for **Anchor rods** and **Threaded rods** and **fischer FIS IG** in hammer drilled holes; **uncracked concrete C20/25**

| **Anchor rod / Threaded rod** | | | **M8** | **M10** | **M12** | **M16** | **M20** |
|---|---|---|---|---|---|---|---|
| **fischer FIS IG** | | | **M5** | **M6** | **M8** | **M10** | **M12** |
| **Combined pullout and concrete cone failure** | | | | | | | |
| Calculation diameter | d | [mm] | 8 | 10 | 12 | 16 | 20 |
| **Uncracked concrete** | | | | | | | |
| **Characteristic bond resistance in uncracked concrete C20/25** | | | | | | | |
| Hammer-drilling with standard drill bit (dry or wet concrete) | | | | | | | |
| Temperature range I: 24 °C / 40 °C | $\tau_{Rk,ucr}$ | [N/mm²] | 9,9 | 9,9 | 9,9 | 9,9 | 10,8 |
| Temperature range II: 50 °C / 80 °C | $\tau_{Rk,ucr}$ | [N/mm²] | 8,6 | 8,6 | 8,6 | 8,6 | 9,2 |
| **Installation factors** | | | | | | | |
| Dry or wet concrete | $\gamma_{inst}$ | [-] | 1,2 | | | | 1,4 |

| **Table C5.1: Displacement** for **Anchor rods / Threaded rods or fischer FIS IG** | | | | | |
|---|---|---|---|---|---|
| **Anchor rod / Threaded rod** | | **M8** | **M10** | **M12** | **M16** | **M20** |
| **fischer FIS IG** | | **M5** | **M6** | **M8** | **M10** | **M12** |
| **Displacement-Factors for tension loading[1)]** | | | | | | |
| **Uncracked concrete; Temperature range I, II** | | | | | | |
| $\delta_{N0\text{-Factor}}$ | [mm/(N/mm²)] | 0,043 | 0,024 | 0,027 | 0,028 | 0,037 |
| $\delta_{N\infty\text{-Factor}}$ | | 0,023 | 0,023 | 0,023 | 0,023 | 0,023 |
| **Displacement-Factors for shear loading[2)]** | | | | | | |
| **Uncracked concrete; Temperature range I, II** | | | | | | |
| $\delta_{N0\text{-Factor}}$ | [mm/kN] | 0,15 | 0,13 | 0,11 | 0,08 | 0,06 |
| $\delta_{N\infty\text{-Factor}}$ | | 0,23 | 0,19 | 0,16 | 0,12 | 0,09 |

1) Calculation of effective displacement:

$\delta_{N0} = \delta_{N0\text{-Factor}} \cdot \tau$

$\delta_{N\infty} = \delta_{N\infty\text{-Factor}} \cdot \tau$

$\tau$ = acting bond strength under tension loading

2) Calculation of effective displacement:

$\delta_{V0} = \delta_{V0\text{-Factor}} \cdot V$

$\delta_{V\infty} = \delta_{V\infty\text{-Factor}} \cdot V$

V = acting shear loading