IZJAVA O SVOJSTVIMA

DoP 0346

za fischer TermoZ CS II 8; fischer TermoZ CS II 8 DT 110 V (Plastične tiple za korištenje u betonu i zidanim konstrukcijama) HR

1. Jedinstveni identifikator tipa proizvoda: **DoP 0346**

2. Namjena korištenja: **Uvrtni plastični vijci za pričvršćivanje vanjskih toplinsko izolacijskih kompozitnih sustava (ETICS) sa žbukom u beton, zidane sustave, lakoagregatni beton i porobeton i za pričvršćivanje na donju stranu betonskog stropa, Vidi dodatak, posebno priloge B1- B4.**

3. Proizvođač: **fischerwerke GmbH & Co. KG, Klaus-Fischer-Str. 1, 72178 Waldachtal, Njemačka**

4. Ovlašteni zastupnik: **–**

5. Sistem/i od AVCP: **2+**

6. Europski dokument za ocjenjivanje: **EAD 330196-01-0604-v01**
   Europska tehnička ocjena: **ETA-14/0372; 2023-11-03**
   Tijelo za tehničko ocjenjivanje: **ETA-Danmark A/S**
   Prijavljeno tijelo/prijavljena tijela: **2873 TU Darmstadt**

7. Objavljena svojstva:
   Sigurnost u uporabi (BWR 4)
   Karakteristična nosivost sidra po panelu
   - Karakteristična otpornost uslijed kratkotrajnog vlačnog opterećenja Prilog C5
   - Karakteristična otpornost uslijed dugotrajnog vlačnog opterećenja Prilog C5
   - Minimalna rubna udaljenost: Prilog B3
   - Minimalni osni razmak: Prilog B3

   Istisnine:
   - Vlačno opterećenje: Prilog C5
   - Kratkotrajni pomaci Prilog C5
   - Dugotrajni pomaci Prilog C5

   Krutost ploče sidra:
   - Promjer ploče sidra: Prilog C3
   - Otpornost na opterećenje ploče sidra Prilog C3
   - Krutost ploče sidra: Prilog C3

   Karakteristično svojstvo izvlačenja za ploču
   - Minimalna debljina izolacije NPD
   - Kratkotrajna karakteristična otpornost na izvlačenje NPD
   - Dugotrajna otpornost na izvlačenje NPD

   Ušteda energije i zadržavanje topline (BWR 6)
   Toplinska propusnost:
   - Točka toplinske prolaznosti sidra: Prilog C3
   - Debljina izolacijskog sloja ETICS-a: Prilog C3

8. Odgovarajuća tehnička dokumentacija i/ili specifična tehnička dokumentacija: **–**

Svojstva gore navedenog proizvoda su u skladu sa skupom izjava o svojstvima.Ova izjava o svojstvima se izdaje, u skladu sa Europskom regulativom (EU) Br. 305/2011, pod punom odgovornošću gore navedenog proizvođača.

Za proizvođača i u njegovo ime potpisao:

Dr.-Ing. Oliver Geibig, Generalni direktor poslovne jedinice i inženjering

Jürgen Grün, Glavni direktor za kemiju i kvalitetu

Tumlingen, 2023-11-17

Ovaj DoP je pripremljen u različitim jezicima. U slučaju da postoji spor u tumačenju, engleska verzija će uvijek prevladati.

U aneksu se nalaze dodatni podaci na engleskom jeziku, koji ne podliježu zakonskoj regulativi.

Translation guidance Essential Characteristics and Performance Parameters for Annexes
Smjernice za prijevod. Bitne karakteristike i parametri izvedbe za dodatke

Safety in use (BWR 4) **Sigurnost u uporabi (BWR 4)**		
2: Characteristic load bearing capacity of anchors per panel: **Karakteristična nosivost sidra po panelu**		
2.1	Characteristic resistance under short-term tension load: **Karakteristična otpornost uslijed kratkotrajnog vlačnog opterećenja**	$N_{Rk,panel,sh}$ [kN/m^2]
2.2	Characteristic resistance under long-term tension load: **Karakteristična otpornost uslijed dugotrajnog vlačnog opterećenja**	$N_{Rk,panel,lg}$ [kN/m^2]
2.3	Minimum edge distance: **Minimalna rubna udaljenost:**	c_{min} [mm]
2.4	Minimum spacing: **Minimalni osni razmak:**	s_{min} [mm]
3: Displacements: **Istisnine:**		
3.1	Tension load: **Vlačno opterećenje:**	N [kN]
3.2	Short-term displacements: **Kratkotrajni pomaci**	δ_{sh} [mm]
3.3	Long-term displacements: **Dugotrajni pomaci**	δ_{lg} [mm]
4: Plate stiffness: **Krutost ploče sidra:**		
4.1	Diameter of the anchor insulation fixing element: **Promjer ploče sidra:**	[mm]
4.2	Load resistance of the anchor insulation fixing element: **Otpornost na opterećenje ploče sidra**	[kN]
4.3	Plate stiffness: **Krutost ploče sidra:**	[kN/mm]
5: Characteristic pull-through capacity for a panel: **Karakteristično svojstvo izvlačenja za ploču**		
5.1	Minimum thickness of insulation: **Minimalna debljina izolacije**	[mm]
5.2	Short-term characteristic pull-through resistance: **Kratkotrajna karakteristična otpornost na izvlačenje**	$R_{panel,sh}$ [kN/m^2]
5.3	Long-term pull-through resistance: **Dugotrajna otpornost na izvlačenje**	$R_{panel,lg}$ [kN/m^2]
Energy economy and heat retention (BWR 6) **Ušteda energije i zadržavanje topline (BWR 6)**		
6: Thermal transmittance: **Toplinska propusnost:**		
6.1	Point thermal transmittance of an anchor: **Točka toplinske prolaznosti sidra:**	χ [W/K]
6.2	Insulating layer thickness of the ETICS: **Debljina izolacijskog sloja ETICS-a:**	h_D [mm]

II SPECIFIC PART OF THE EUROPEAN TECHNICAL ASSESSMENT

1 Technical description of product

The screwed-in anchors fischer TermoZ CS II 8 and fischer TermoZ CS II 8 DT 110 V are used for fixing of external thermal insulation composite systems (ETICS). The fischer TermoZ CS II 8 consists of an anchor sleeve made of polypropylene with a diameter of 8 mm and an insulation plate made of glass-fiber reinforced polyamide with a diameter of 60 mm. The fischer Termoz CS II 8 DT 110 V consists of an anchor sleeve made of polypropylene with a diameter of 8 mm and an insulation plate made of glass-fiber reinforced polyamide with a diameter of 110 mm. The color of the anchor sleeve is grey. The special compound screw is made of galvanised steel and glass-fiber reinforced polyamide. The anchor is expanded by screwing the screw into the sleeve. It is possible to install the anchor flush or countersunk mounted to the surface of the insulation.

The product description is given in Annex A.

2 Specification of the intended use in accordance with the applicable European Assessment Document (hereinafter EAD)

The performances given in Section 3 are only valid if the anchor is used in compliance with the specifications and conditions given in Annex B1 to B3.

The provisions made in this European Technical Assessment are based on an assumed intended working life of the anchor of 25 years.

The indications given on the working life cannot be interpreted as a guarantee given by the producer or Assessment Body, but are to be regarded only as a means for choosing the right products in relation to the expected economically reasonable working life of the works.

3 Performance of the product and references to the methods used for its assessment

3.1 Characteristics of product

Safety in case of fire (BWR 2):
No Performance Assessed.

Safety in use (BWR4):
The essential characteristics are detailed in Annex B3 and Annex C1 to C5.

Characteristic pull-through capacity for a panel: No performance assessed.

Note. The characteristic pull-through capacity for a panel depends on the relevant panel and is to be assessed for the full ETICS kit taking into account the relevant insulation product.

Energy economy and heat retention (BWR6):
The essential characteristics are detailed in the Annex C3.

Other Basic Requirements are not relevant.

General aspects
The verification of durability is part of testing of the essential characteristics. Durability is only ensured if the specifications of intended use according to Annex B are taken into account.

3.2 Methods of assessment

The assessment of fitness of the anchor for the intended use in relation to the requirements for mechanical resistance and stability and safety in use in the sense of the Basic Requirements 4 has been made in accordance with the EAD 330196-01-0604 Plastic anchors made of virgin or non-virgin material for fixing of external thermal insulation composite systems with rendering as well as EAD 330196-01-0604-v01 - Screwed-in plastic anchors for fixing of external thermal insulation composite systems (ETICS) on bottom side of ceilings.

4 Assessment and verification of constancy of performance (AVCP)

4.1 AVCP system

According to the decision 97/463/EC of the European Commission, the system(s) of assessment and verification of constancy of performance (see Annex V to Regulation (EU) No 305/2011) is 2+.

TermoZ CS II 8

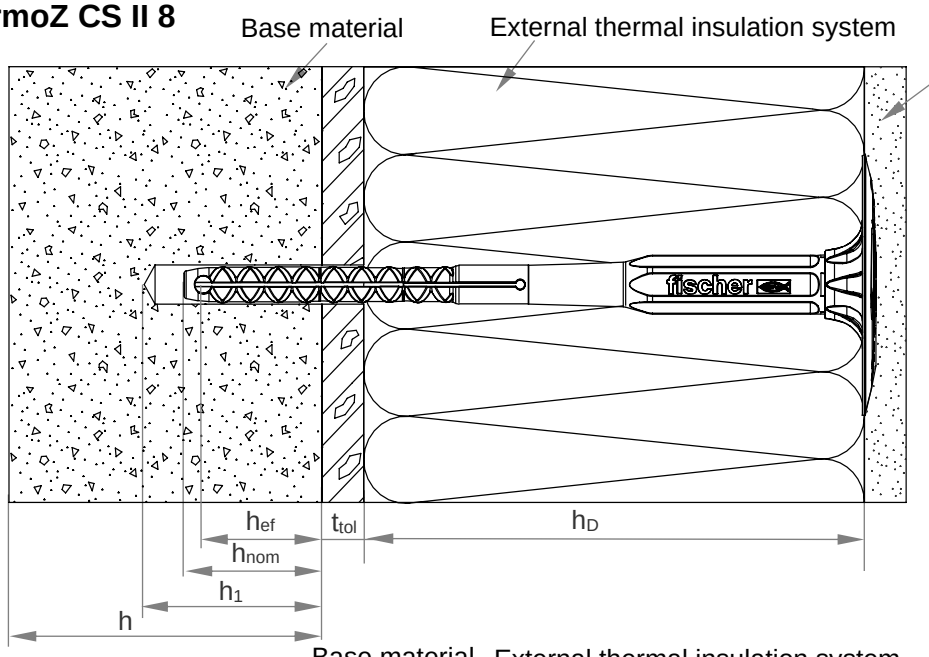

Mounting on the surface, e.g. here shown: façade use. Use on bottom side of ceilings also possible.

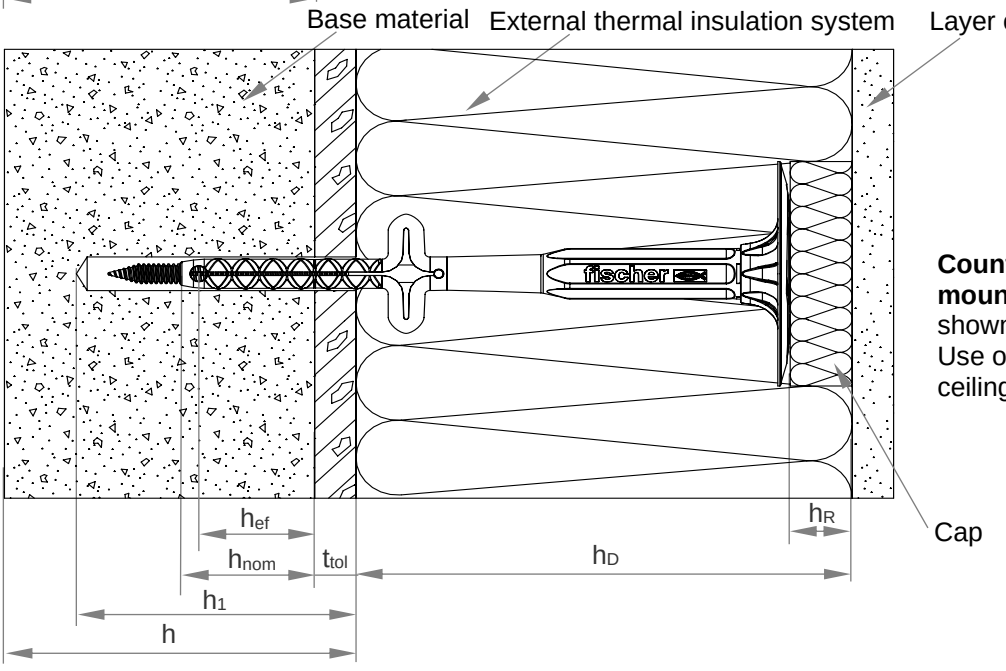

Countersunk mounting, e.g. here shown: façade use. Use on bottom side of ceilings also possible.

Legend

h_{nom}	=	Overall plastic anchor embedment depth in the base material
h_{ef}	=	Effective anchorage depth in the base material
h_1	=	Depth of drilled hole to deepest point
h	=	Thickness of member (wall)
h_D	=	Thickness of insulation material
t_{tol}	=	Thickness of equalising layer and / or non-load-bearing coating
h_R	=	Thickness of cap

Figures not to scale

fischer TermoZ CS II 8 and fischer TermoZ CS II 8 DT 110 V	**Annex A1**
Product description Installed anchor TermoZ CS II 8 for façade use and for use on bottom side of ceilings	

TermoZ CS II 8 DT 110 V

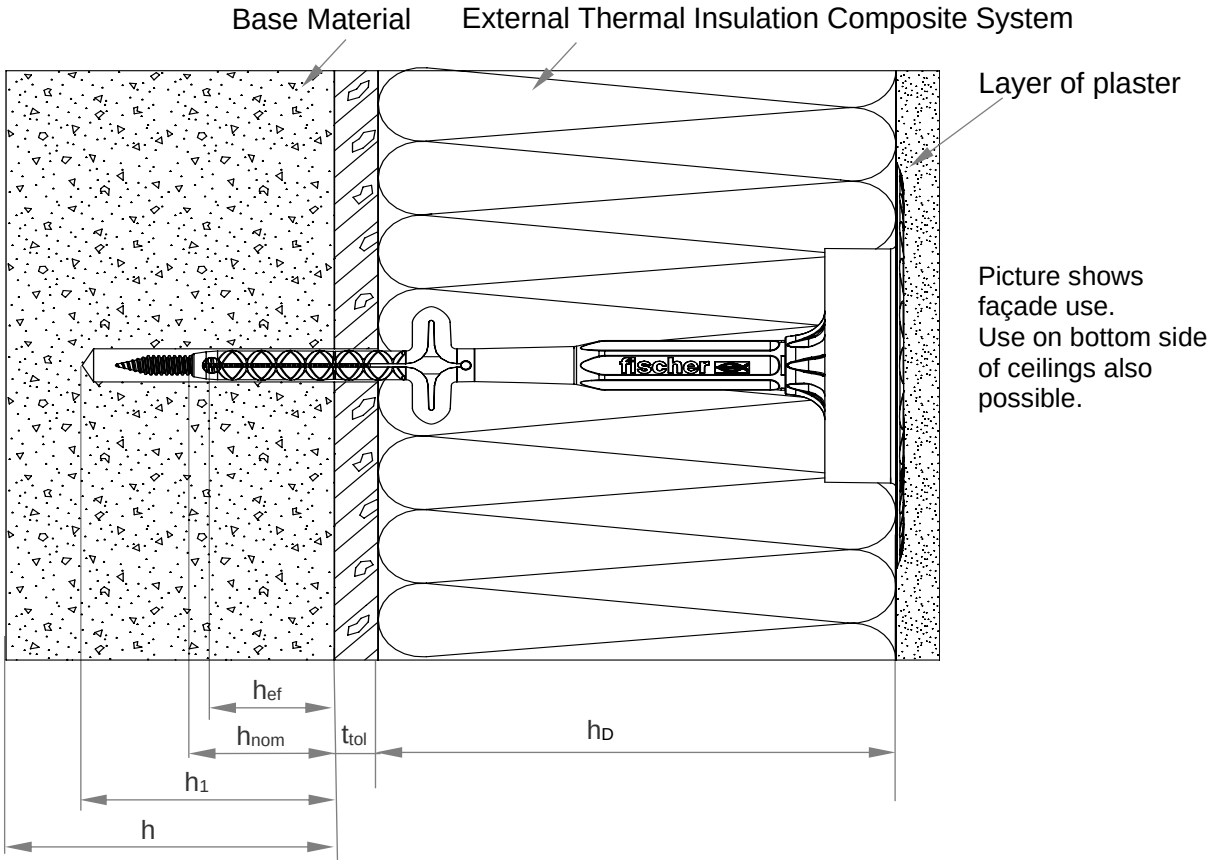

Legend

h_{nom}	=	Overall plastic anchor embedment depth in the base material
h_{ef}	=	Effective anchorage depth in the base material
h_1	=	Depth of drilled hole to deepest point
h	=	Thickness of member (wall)
h_D	=	Thickness of insulation material
t_{tol}	=	Thickness of equalising layer and / or non-load-bearing coating

Figure not to scale

fischer TermoZ CS II 8 and fischer TermoZ CS II 8 DT 110 V	**Annex A2**
Product description Installed anchor TermoZ CS II 8 DT 110 V 8 for façade use and for use on bottom side of ceilings	

Anchor sleeve / Specific screw for TermoZ CS II 8/95-255

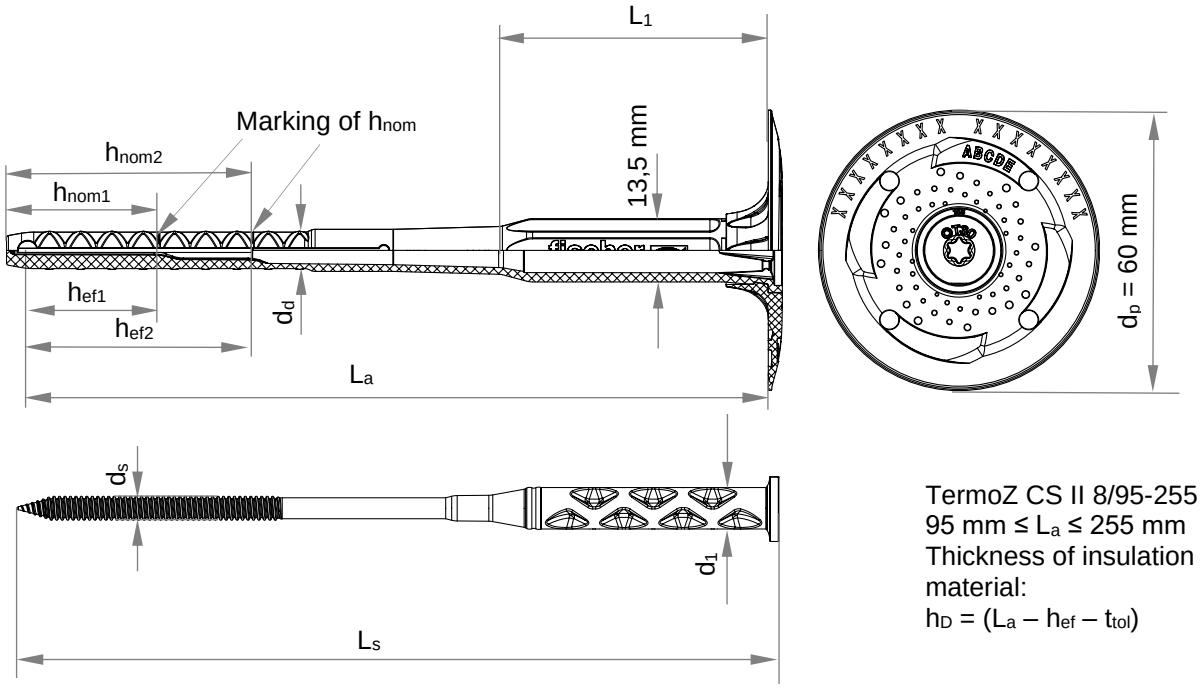

TermoZ CS II 8/95-255
95 mm ≤ L_a ≤ 255 mm
Thickness of insulation material:
$h_D = (L_a - h_{ef} - t_{tol})$

Anchor sleeve / Specific screw for TermoZ CS II 8/275-455

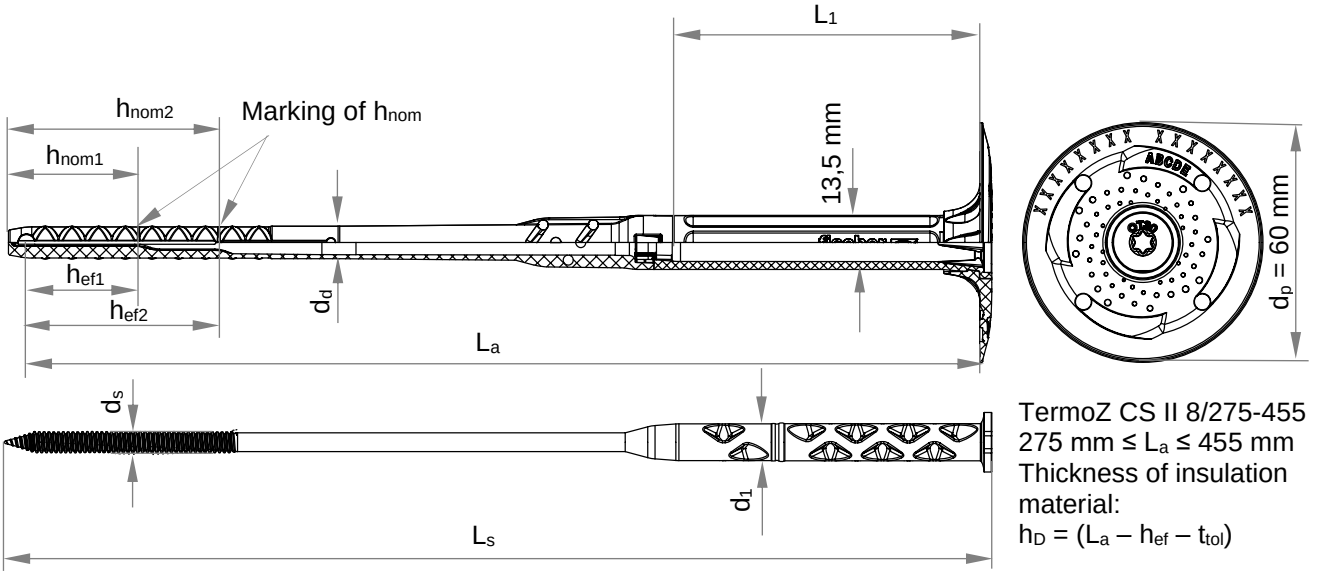

TermoZ CS II 8/275-455
275 mm ≤ L_a ≤ 455 mm
Thickness of insulation material:
$h_D = (L_a - h_{ef} - t_{tol})$

Figures not to scale

fischer TermoZ CS II 8 and fischer TermoZ CS II 8 DT 110 V	**Annex A3**
Product description Dimensions TermoZ CS II 8	

TermoZ CS II 8/115-255 DT 110 V

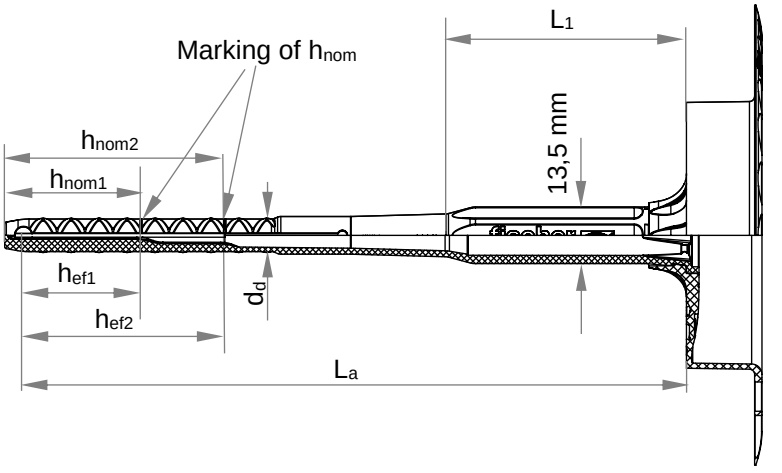

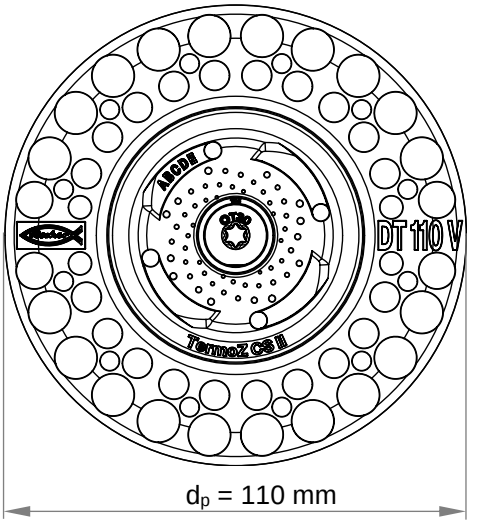

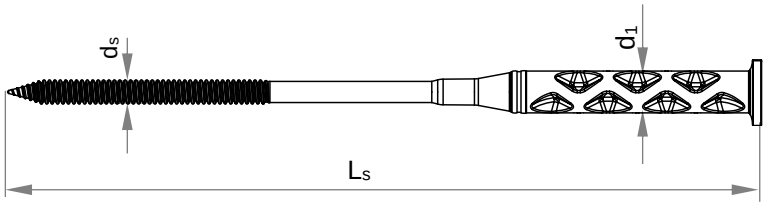

TermoZ CS II 8/115-255 DT 110 V:
115 mm ≤ L_a ≤ 255 mm
Thickness of insulation material:
$h_D = (L_a - h_{ef} - t_{tol})$

TermoZ CS II 8/275-455 DT 110 V

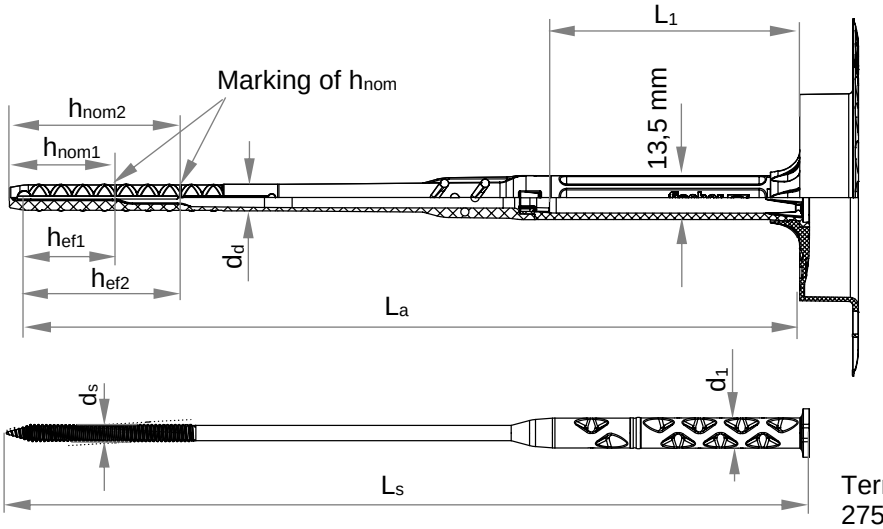

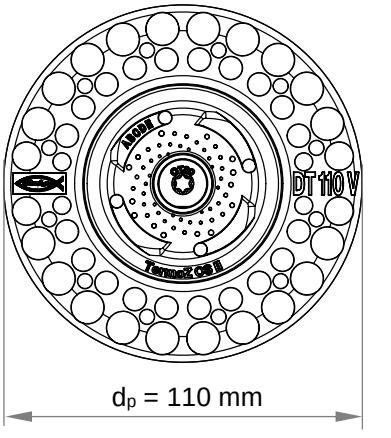

TermoZ CS II 8/275-455 DT 110 V:
275 mm ≤ L_a ≤ 455 mm
Thickness of insulation material:
$h_D = (L_a - h_{ef} - t_{tol})$

Figures not to scale

fischer TermoZ CS II 8 and fischer TermoZ CS II 8 DT 110 V	**Annex A4**
Product description Dimensions TermoZ CS II 8 DT 110 V	

Setting tool with SDS adapter or hexagonal adapter available

Countersunk setting of anchor TermoZ CS II 8
and setting of TermoZ CS II 8 DT 110 V
Note: not possible for TermoZ CS II **8/95**

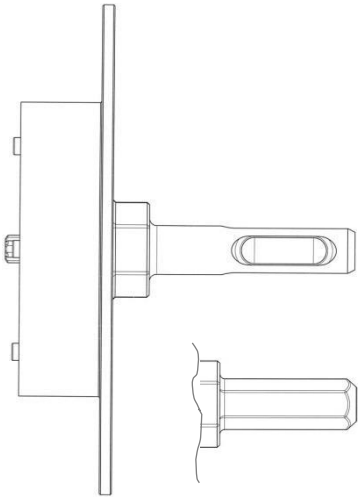

Optional: plain surface setting
Note: not possible for
TermoZ CS II 8 **DT 110 V**

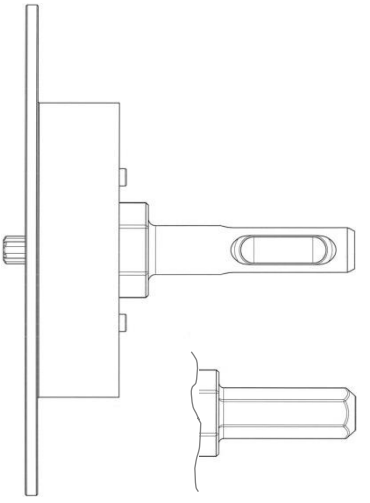

Cap

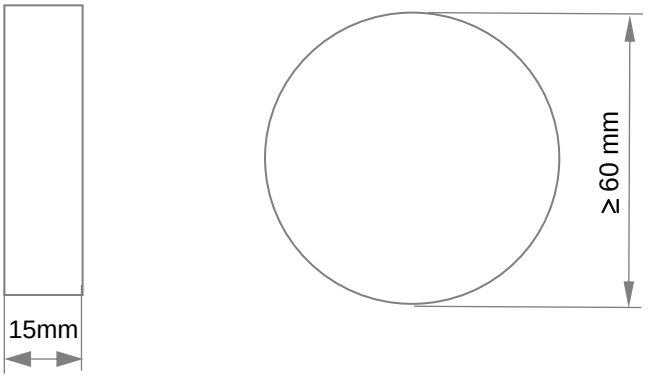

Figures not to scale

fischer TermoZ CS II 8 and fischer TermoZ CS II 8 DT 110 V	**Annex A5**
Product description Setting tool and dimensions of cap	

Table A6.1: Marking of plates

	Designation
Name of anchor	**TermoZ CS II 8**
Example	TermoZ CS II ABCDE, (optional), CE (optional), Ø 8 (optional) xxxxx additional marks possible
Name of anchor	**TermoZ CS II 8 DT 110 V**
Example	TermoZ CS II ABCDE DT 110 V

Table A6.2: Dimensions of TermoZ CS II 8

Anchor type	Anchor sleeve			Shaft		Specific screw		
	d_d	h_{nom}	h_{ef}	L_a	L_1	d_s	l_s	d_1
TermoZ CS II 8/95-115	8	32,5	25	95-115	42	5,4	L_a + 10	9,5
TermoZ CS II 8/135-255		32,5	25	135-255	52			
		52,5	45					
TermoZ CS II 8/275-295		32,5	25	275-295	76			
		52,5	45					
TermoZ CS II 8/315-375		32,5	25	315-375	156			
		52,5	45					
TermoZ CS II 8/395-455		32,5	25	395-455	236			
		52,5	45					

Table A6.3: Dimensions of TermoZ CS II 8 DT 110 V

Anchor type	Anchor sleeve			Shaft		Specific screw		
	d_d	h_{nom}	h_{ef}	L_a	L_1	d_s	l_s	d_1
TermoZ CS II 8/115 DT 110 V	8	32,5	25	95-115	42	5,4	L_a + 10	9,5
TermoZ CS II 8/135-255 DT110 V		32,5	25	135-255	52			
		52,5	45					
TermoZ CS II 8/275-295 DT 110 V		32,5	25	275-295	76			
		52,5	45					
TermoZ CS II 8/315-375 DT 110 V		32,5	25	315-375	156			
		52,5	45					
TermoZ CS II 8/395-455 DT 110 V		32,5	25	395-455	236			
		52,5	45					

All dimensions in [mm]

fischer TermoZ CS II 8 and fischer TermoZ CS II 8 DT 110 V	**Annex A6**
Product description Marking of plates Dimensions of anchors	

Table A7.1: Materials

Designation	Material
Anchor sleeve / shaft	PP, colour: grey
Specific compound screw TermoZ CS II 8 / TermoZ CS II 8 DT 110 V	PA6, GF with galvanised steel Zn5/Ag or Zn5/An as per EN ISO 4042
Cap	Soft wood fibre; polystyrene; mineral wool
Anchor plate / Slip-on plate	PA6, GF colour: grey, blue, green, orange, red, yellow, black, mocca-latte

Drawing of the slip-on plate (e.g. DT 140)

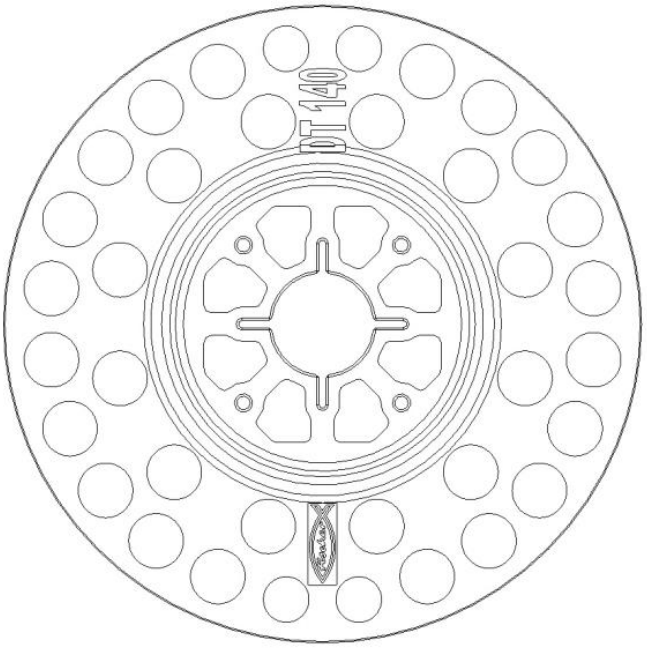

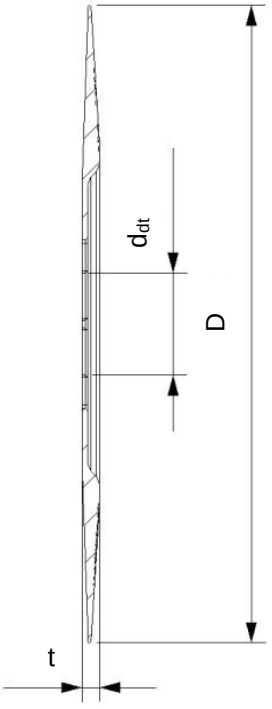

Table A7.2: Slip-on plates, diameters

Slip-on plate	D [mm]	d_{dt} [mm]	t [mm]
DT 90 / DT 110 / DT 140	90 / 110 / 140	22,5	3,9

Figures not to scale

fischer TermoZ CS II 8 and fischer TermoZ CS II 8 DT 110 V

Product description
Materials and dimensions of slip-on plates

Annex A7

Specifications of intended use

Anchorages subject to:

- The anchor may be used for transmission of wind suction loads.
- Additional the anchor may be used for transmission of dead loads of thermal insulation panels with or without rendering on bottom side of ceilings.
- Anchors may be used for fixing of thermal insulation panels with or without rendering on bottom side of ceilings in concrete with or without supplementary adhesive. The product can only be used for ETICS with the following parameters:
  - for use of insulation panels with a tensile resistance equal and more than 80 kPa - adhesion of ETICS's rendering to the insulation panel shall be at least 80 kPa.
  - for use of insulation panels with a tensile resistance less than 80 kPa - adhesion of ETICS's rendering to the insulation panel shall be at least as high as nominal tensile resistance of a panel.

Base materials:

- Normal weight concrete without fibres ≥ C12/15 (base material group "A") as per EN 206:2013+A1:2016, see Annex C1.

  Note: only for use on bottom side of ceilings:

  Reinforced or unreinforced concrete without fibres, strength ≥ C12/15 (base material group "A") as per EN 206, see Annex C5.
- Solid masonry (base material group "B"), as per EN 771-1:2011+A1:2015, EN 771-2:2011+A1:2015, EN 771-3:2011+A1:2015, see Annex C1.
- Hollow or perforated masonry (base material group "C"), as per EN 771-1:2011+A1:2015, EN 771-2:2011+A1:2015 or EN 771-3:2011+A1:2015, see Annex C1 and C2.
- Lightweight aggregate concrete (base material group "D"), as per EN 1520:2011 / EN 771-3:2011+A1:2015, see Annex C2.
- Autoclaved aerated concrete (base material group "E"), as per EN 771-4:2011+A1:2015, see Annex C2.
- For other comparable materials of the base material groups "A", "B", "C", "D" and "E" the characteristic resistance of the anchor may be determined by job site tests according to EOTA Technical Report TR 051 Edition April 2018.

Temperature Range:

- 0 °C to + 40 °C (max. short term temperature + 40 °C and max. long term temperature + 24 °C) of the base material.

Design:

- The anchorages are designed under the responsibility of an engineer experienced in anchorages and masonry work with the partial factors γ_M = 2,0 und γ_F = 1,5 if there are no other national regulations.
- For use on bottom side of ceilings in concrete, anchorages are designed with partial safety factors γ_{EPS} = 1,5 for EPS insulation panels and γ_{MW} = 2,0 for mineral wool panels, if there are no other national regulations.
- Verifiable calculation notes and drawings are prepared taking account of the loads to be anchored. The position of the anchors is indicated on the design drawings.
- Fasteners are only to be used for multiple fixings of thermal insulation composite systems.
- For use on bottom side of ceilings in concrete at least 4 anchors per m² shall be used in insulation panels in absence of other national requirements.

fischer TermoZ CS II 8 and fischer TermoZ CS II 8 DT 110 V	**Annex B1**
Intended use Specifications	

Installation:

- Drilling method see Annex C1, C2 and C5.
- Anchor installation carried out by appropriately qualified personnel and under the supervision of the person responsible for technical matters on the site.
- Installation temperature of the anchor from 0 °C to + 40 °C.
- Exposure to UV due to solar radiation of the anchor not protected by rendering ≤ 6 weeks.
- The anchors have to be arranged depending on the used insulation material, the ETIC system and/or the system approval.
- For application on bottom side ceilings, it is possible to use the anchors without rendering or applying under UV protection longer than 6 weeks. If the anchors are not protected by rendering for the lifetime, the anchors must be covered by stainless steel or carbon steel with coating complying with corrosion resistance class 3 according to EN ISO 9223 or EN ISO 12944-2. Other materials are suitable if the evidence of non-UV transmission is provided. Yearly checks are required and damaged covers have to be replaced.

fischer TermoZ CS II 8 and fischer TermoZ CS II 8 DT 110 V	**Annex B2**
Intended use Specifications	

Table B3.1: Installation parameters for base material groups “A” concrete, “B” solid bricks, “C” hollow or perforated bricks, “D” lightweight aggregate concrete and “E” autoclaved aerated concrete

Anchor type				TermoZ CS II 8/95-455 TermoZ CS II 8/115-455 DT 110 V	
				flush	countersunk[1)]
Nominal drill hole diameter	d_0	=	[mm]	8	8
Cutting diameter of drill bit	d_{cut}	≤	[mm]	8,45	8,45
Depth of drill hole to deepest point	h_1	≥	[mm]	40	55
Overall plastic anchor embedment depth in the base material	h_{nom}	≥	[mm]	32,5	32,5
Effective anchorage depth in the base material	h_{ef}	≥	[mm]	25	25

[1)] Not possible for TermoZ CS II 8/95.

Table B3.2: Installation parameters alternative option for base material group “E” for higher loads

Anchor type				TermoZ CS II 8/135-455 TermoZ CS II 8/135-455 DT 110 V	
				flush	countersunk
Nominal drill hole diameter	d_0	=	[mm]	8	8
Cutting diameter of drill bit	d_{cut}	≤	[mm]	8,45	8,45
Depth of drill hole to deepest point	h_1	≥	[mm]	60	75
Overall plastic anchor embedment depth in the base material	h_{nom}	≥	[mm]	52,5	52,5
Effective anchorage depth in the base material	h_{ef}	≥	[mm]	45	45

Table B3.3: Minimum thickness of member, edge distances and spacing in all regulated base material groups

Anchor type				TermoZ CS II 8/95-455 TermoZ CS II 8/115-455 DT 110 V
Minimum thickness of member	h_{min}	=	[mm]	100
Minimum spacing	s_{min}	=	[mm]	100
Minimum edge distance	c_{min}	=	[mm]	100

Scheme of edge distances and spacing for base material group “A”, concrete, group “B” solid bricks, group “C” hollow or perforated masonry, group “d” lightweight aggregate concrete, group “E” autoclaved aerated concrete

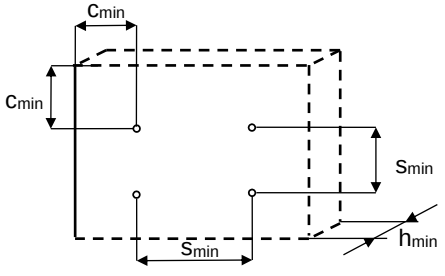

Figure not to scale

fischer TermoZ CS II 8 and fischer TermoZ CS II 8 DT 110 V

Intended use
Installation parameters depending on the base material groups
Minimum thickness of member, edge distances and spacings

Annex B3

Installation instruction

Standard setting of TermoZ CS II 8 (plain surface setting) without setting tool / exemplarily illustrated installation in the ceiling – installation in the wall / façade is also possible

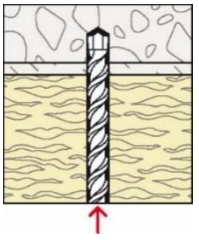

1. Drill hole by corres-ponding drilling method

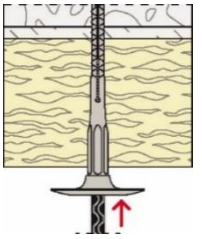

2. Insert anchor manually

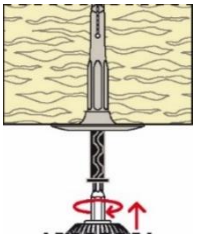

3. Set anchor by machine

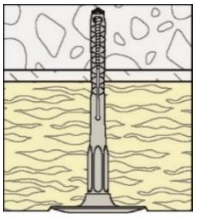

4. Correctly installed anchor

Setting of TermoZ CS II 8 (plain surface setting) by setting tool / exemplarily illustrated installation in the wall / façade – installation in the ceiling is also possible

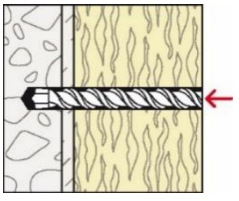

1. Drill hole by corres-ponding drilling method

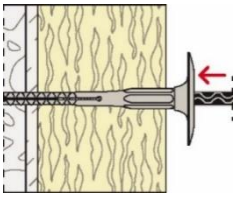

2. Insert anchor manually

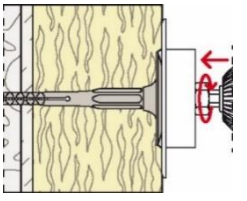

3. Set anchor by setting tool with the machine

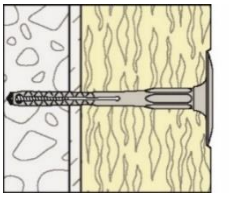

4. Correctly installed anchor

Setting of TermoZ CS II 8 (countersunk setting) by setting tool / exemplarily illustrated installation in the wall / façade – installation in the ceiling is also possible

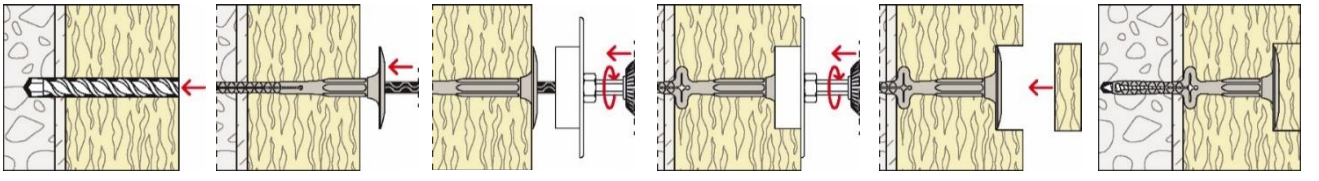

1. Drill hole by corresponding drilling method
2. Insert anchor manually
3. Put on setting tool
4. Set anchor by setting tool with the machine
5. Put on cap
6. Correctly installed anchor

Setting of TermoZ CS II 8 DT 110 V by setting tool / exemplarily illustrated installation in the wall / façade – installation in the ceiling is also possible

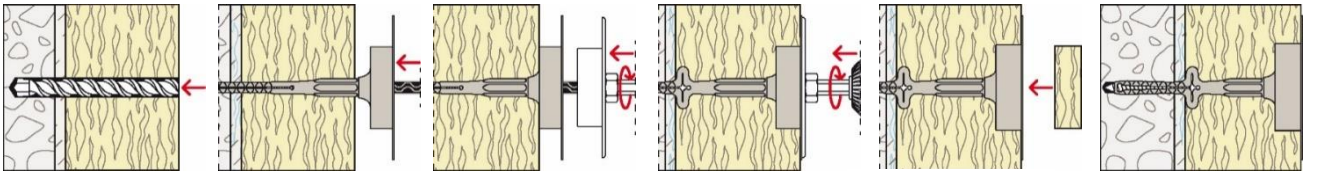

1. Drill hole by corresponding drilling method
2. Insert anchor manually
3. Put on setting tool
4. Set anchor by setting tool with the machine
5. Put on cap
6. Correctly installed anchor

fischer TermoZ CS II 8 and fischer TermoZ CS II 8 DT 110 V	**Annex B4**
Intended use Installation instruction for use in façade and for use on bottom side of ceilings	

Table C1.1: Characteristic resistance to tension loads N_{Rk} for single anchor TermoZ CS II 8 and TermoZ CS II 8 DT 110 V for façade use

Base material	Group	Bulk density ρ [kg/dm³]	Mean compressive strength / minimum compressive strength single brick according to EN 771[1)] [N/mm²]	Remarks	Drilling method[2)]	Characteristic resistance to tension loads N_{Rk} [kN]
Concrete ≥ C12/15 to ≤ C50/60, as per EN 206:2013+A1:2016	A	-	-	-	H	**1,50**
Weather resistant concrete shell ≥ C20/25 as per EN 206:2013+A1:2016	A	-	-	Thickness h ≥ 40 mm.	H	**1,50**
Solid clay brick, Mz, as per EN 771-1:2011+A1:2015	B[3)]	≥ 1,8	≥ 25/20	-	H	**1,50**
Calcium silicate solid brick, KS, as per EN 771-2:2011+A1:2015	B[3)]	≥ 1,4	≥ 15/12 ≥ 25/20	-	H	**1,50**
Solid lightweight concrete block, Vbl, as per EN 771-3:2011+A1:2015	B[3)]	≥ 1,4	≥ 10/8	-	H	**1,20**
Solid concrete block, Vbn, as per EN 771-3:2011+A1:2015	B[3)]	≥ 2,0	≥ 15/12 ≥ 25/20	-	H	**1,50**

[1)] The compressive strength of the single brick must not be less than 80% of the mean compressive strength.
[2)] H = Hammer drilling, R = Rotary drilling.
[3)] Vertically perforation ≤ 15%; cross section reduced by perforation vertically to the resting area.

fischer TermoZ CS II 8 and fischer TermoZ CS II 8 DT 110 V	**Annex C1**
Performances Characteristic resistance to tension loads	

Table C2.1: Characteristic resistance to tension loads N_{Rk} for single anchor TermoZ CS II 8 and TermoZ CS II 8 DT 110 V for façade use

Base material	Group	Bulk density ρ [kg/dm³]	Mean compressive strength / minimum compressive strength single brick according to EN 771[1)] [N/mm²]	Remarks	Drilling method[2)]	Characteristic resistance to tension loads N_{Rk} [kN]
Vertically perforated clay brick, Hlz, as per EN 771-1:2011+A1:2015	C[3)]	≥ 0,9	≥ 15/12	Exterior web thickness ≥ 12 mm.	R	**1,00**
			≥ 15/12		H	**0,65**
		≥ 1,6	≥ 60/48		R	**1,50**
			≥ 60/48		H	**1,50**
Hollow calcium silicate brick, KSL, as per EN 771-2:2011+A1:2015	C[3)]	≥ 1,4	≥ 15/12	Exterior web thickness ≥ 23 mm.	H	**1,50**
Hollow brick lightweight concrete, Hbl, as per EN 771-3:2011+A1:2015	C[3)]	≥ 0,9	≥ 5/4	Exterior web thickness ≥ 16 mm.	H	**0,50**
Hollow brick concrete, Hbn, as per EN 771-3:2011+A1:2015	C[3)]	≥ 1,2	≥ 5/4	Exterior web thickness ≥ 38 mm.	H	**0,75**
			≥ 7,5/6			**1,10**
			≥ 10/8			**1,50**
			≥ 12,5/10			**1,50**
Lightweight aggregate concrete, LAC, as per EN 1520:2011 EN 771-3:2011+A1:2015	D	≥ 0,9	≥ 5/4	-	H	**0,95**
			≥ 7,5/6			**1,50**
Autoclaved aerated concrete blocks, AAC, as per EN 771-4:2011+A1:2015 h_{nom} = 32,5 mm	E	≥ 0,50	≥ 5/4	-	R	**0,65**
Autoclaved aerated concrete blocks, AAC, as per EN 771-4:2011+A1:2015 h_{nom} = 52,5 mm[4)]	E					**1,10**

[1)] The compressive strength of the single brick must not be less than 80% of the mean compressive strength.
[2)] H = Hammer drilling, R = Rotary drilling.
[3)] Vertically perforation > 15 % and ≤ 50 %, cross section reduced by perforation vertically to the resting area.
[4)] Not possible for TermoZ CS II 8/95 and TermoZ CS II 8/115 and TermoZ CS II 8/115 DT 110 V.

fischer TermoZ CS II 8 and fischer TermoZ CS II 8 DT 110 V	**Annex C2**
Performances Characteristic resistance to tension loads	

Table C3.1: Plate stiffness according to EOTA Technical Report TR 026:2016-05

Anchor type	Max. size of the anchor plate d_p [mm]	Load resistance of the anchor plate [kN]	Plate stiffness c [kN/mm]
TermoZ CS II 8	60	2,61	1,29
TermoZ CS II 8 DT 110 V	110	2,61	1,29

Table C3.2: Point thermal transmittance according to EOTA Technical Report TR 025:2016-05

TermoZ CS II 8 and TermoZ CS II 8 DT 110 V	h_{nom} [mm]	Thickness of insulation material h_D [mm]	Point thermal transmittance χ [W/K] Base material groups A	B	C	D	E
Mounting on the surface	32,5	60	0,002	0,001			0,000
		80	0,002			0,001	
		100 - 120	0,001				
		140 - 200	0,002			0,001	
		220 - 260	0,002				0,001
		280 - 300	0,001				0,000
		320 - 340	0,001				
		360 - 400	0,000				
		420	0,001	0,000			
	52,5	100 - 120	-				0,001
		140 - 240	-				0,001
		320	-				0,001
		400	-				0,000
Countersunk mounting	32,5	80 - 200	0,001				
		220	0,002				0,001
		240	0,002	0,001			
		260	0,002		0,001		
		280	0,001	0,000			
		300	0,001			0,000	
		320 - 340	0,001				0,000
		360 - 420	0,000				
	52,5	100 - 120	-				0,000
		140 - 240	-				0,001
		320	-				0,000
		400	-				0,000

fischer TermoZ CS II 8 and fischer TermoZ CS II 8 DT 110 V

Performances
Plate stiffness and point thermal transmittance

Annex C3

Table C4.1: Displacements of the TermoZ CS II 8 and TermoZ CS II 8 DT 110 V for façade use

Base material		Mean compressive strength / minimum compressive strength single brick according to EN 771[1)] [N/mm²]	Tension load N_{Rd} [kN]	Displace-ments $\Delta(\delta_N)$ [mm]
Concrete ≥ C12/15 ≤ C50/60, as per EN 206:2013+A1:2016		-	0,50	< 0,30
Weather resistant concrete shell ≥ C20/25; as per EN 206:2011+A1:2016		-	0,50	< 0,30
Clay brick, Mz, as per EN 771-1:2011+A1:2015		≥ 25/20	0,50	< 0,50
Calcium silicate solid brick, KS, as per EN 771-2:2011+A1:2015		≥ 15/12	0,50	< 0,30
		≥ 25/20	0,50	
Solid lightweight concrete block, Vbl, as per EN 771-3:2011+A1:2015		≥ 10/8	0,43	< 0,40
Solid concrete block, Vbn, as per EN 771-3:2011+A1:2015		≥ 15/12	0,50	< 0,30
		≥ 25/20	0,50	
Vertically perforated clay brick, Hlz, as per EN 771-1:2011+A1:2015	rotary drilling	≥ 15/12	0,33	< 0,50
	hammer drilling		0,22	< 0,30
	rotary drilling	≥ 60/48	0,50	< 0,40
	hammer drilling		0,50	
Hollow calcium silicate brick, KSL, as per EN 771-2:2011+A1:2015		≥ 15/12	0,50	< 0,40
Hollow brick lightweight concrete, Hbl, as per EN 771-3:2011+A1:2015		≥ 5/4	0,17	< 0,20
Hollow brick concrete, Hbn, as per EN 771-3:2011+A1:2015		≥ 5/4	0,25	< 0,20
		≥ 7,5/6	0,37	< 0,30
		≥ 10/8	0,50	< 0,40
		≥ 12,5/10	0,50	< 0,40
Lightweight Aggregate Concrete, ≥ LAC as per EN 1520:2011 / EN 771-3:2011+A1:2015		≥ 5/4	0,32	< 0,50
		≥ 7,5/6	0,50	< 0,50
Autoclaved aerated concrete blocks, AAC, as per EN 771-4:2011+A1:2015	h_{nom} = 32,5 mm	≥ 5/4	0,22	< 0,20
	h_{nom} = 52,5 mm[2)]		0,37	

[1)] The compressive strength of the single brick must not be less than 80% of the mean compressive strength.
[2)] Not possible for TermoZ CS II 8/95 and TermoZ CS II 8/115 and TermoZ CS II 8/115 DT 110 V.

fischer TermoZ CS II 8 and fischer TermoZ CS II 8 DT 110 V	**Annex C4**
Performances Displacements	

Table C5.1: Characteristic load bearing capacity of anchors per m² panel under short-term tension load $N_{Rk,panel,sh}$ [kN/m²] and long-term tension load $N_{Rk,panel,lg}$ [kN/m²] on bottom side of ceilings of the TermoZ CS II 8 and TermoZ CS II 8 DT 110 V

Base material	Amount of anchors per m² n_{panel} [-]	Short-term characteristic resistance for single anchor under tension load $N_{Rk,sh}$ [kN]	Characteristic resistance under short-term tension load $N_{Rk,panel,sh}$ [kN/m²]	Long-term characteristic resistance for single anchor under tension load $N_{Rk,lg}$ [kN]	Chararcteristic resistance under long-term tension load $N_{Rk,panel,lg}$ [kN/m²]
Concrete[1)] ≥ C12/15 ≤ C50/60, as per EN 206:2013+A1:2016, Hammer drilling	**n_{panel}**	**0,65**	**0,65 x n_{panel}[2)]**	**0,90**	**0,90 x n_{panel}[2)]**
	4	**0,65**	**2,60**	**0,90**	**3,60**
	16	**0,65**	**10,40**	**0,90**	**14,40**

[1)] Partial factor for concrete γ_M = 1,80.
[2)] In case of different number of anchors per m².

Table C5.2: Displacement based on characteristic load bearing capacity per m² panel of the TermoZ CS II 8 and TermoZ CS II 8 DT 110 V for use on bottom side of ceilings

Base material	Tension load N [kN]	Short-term δ_{sh} [mm]	Long-term δ_{lg} [mm]
Concrete ≥ C12/15 ≤ C50/60, as per EN 206:2013+A1:2016	0,27	0,06	1,10
	0,95	0,06	1,10

fischer TermoZ CS II 8 and fischer TermoZ CS II 8 DT 110 V	**Annex C5**
Performances Characteristic load bearing capacity of anchors per panel Displacement based on characteristic load bearing capacity per panel	