IZJAVA O SVOJSTVIMA

DoP 0298

za fischer TermoZ CS II 8 / fischer TermoZ CS II 8 DT 110 V (Plastična pričvrsnica za pričvršćivanje vanjskih toplinsko izolacijskih kompozitnih sustava sa žbukom) HR

1. Jedinstveni identifikator tipa proizvoda:	**DoP 0298**	
2. Namjena korištenja:	**Vijčano plastično sidro za pričvršćivanje vanjskih toplinsko izolacijskih kompozitnih sustava sa žbukom u betonu i zidovima, vidi dodatak, posebno priloge B1-B3.**	
3. Proizvođač:	**fischerwerke GmbH & Co. KG, Klaus-Fischer-Str. 1, 72178 Waldachtal, Njemačka**	
4. Ovlašteni zastupnik:	**–**	
5. Sistem/i od AVCP:	**2+**	
6. Europski dokument za ocjenjivanje:	**EAD 330196-01-0604**	
Europska tehnička ocjena:	**ETA-14/0372; 2022-05-08**	
Tijelo za tehničko ocjenjivanje:	**ETA-Danmark A/S**	
Prijavljeno tijelo/prijavljena tijela:	**2873 TU Darmstadt**	
7. Objavljena svojstva:		
Sigurnost u uporabi (BWR 4)		
Karakteristična nosivost:	**Karakteristični otpor pod vlačnim opterećenjem:**	**Priloge C1-C2**
	Minimalna rubna udaljenost:	**Prilog B2**
	Minimalni osni razmak:	**Prilog B2**
Istisnine:	**Vlačno opterećenje s djelomičnim sigurnosnim faktorom:**	**Prilog C4**
	Istisnine:	**Prilog C4**
Krutost ploče sidra:	**Promjer ploče sidra:**	**Prilog C3**
	Otpornost na opterećenje ploče sidra	**Prilog C3**
	Krutost ploče sidra:	**Prilog C3**
Ušteda energije i zadržavanje topline (BWR 6)		
Toplinska propusnost:	**Točka toplinske prolaznosti sidra:**	**Priloge C3**
	Debljina izolacijskog sloja ETICS-a:	**Priloge C3**
8. Odgovarajuća tehnička dokumentacija i/ili specifična tehnička dokumentacija:	**–**	

Svojstva gore navedenog proizvoda su u skladu sa skupom izjava o svojstvima.Ova izjava o svojstvima se izdaje, u skladu sa Europskom regulativom (EU) Br. 305/2011, pod punom odgovornošću gore navedenog proizvođača.

Za proizvođača i u njegovo ime potpisao:

Dr.-Ing. Oliver Geibig, Generalni direktor poslovne jedinice i inženjering

Jürgen Grün, Glavni direktor za kemiju i kvalitetu

Tumlingen, 2022-05-16

Ovaj DoP je pripremljen u različitim jezicima. U slučaju da postoji spor u tumačenju, engleska verzija će uvijek prevladati.

U aneksu se nalaze dodatni podaci na engleskom jeziku, koji ne podliježu zakonskoj regulativi.

II SPECIFIC PART OF THE EUROPEAN TECHNICAL ASSESSMENT

1 Technical description of product

The screwed-in anchors fischer TermoZ CS II 8 and fischer TermoZ CS II 8 DT 110 V are used for fixing of external thermal insulation composite systems (ETICS). The fischer TermoZ CS II 8 consists of an anchor sleeve made of polypropylene with a diameter of 8 mm and an insulation plate made of glass-fiber reinforced polyamide with a diameter of 60 mm. The fischer Termoz CS II 8 DT 110 V consists of an anchor sleeve made of polypropylene with a diameter of 8 mm and an insulation plate made of glass-fiber reinforced polyamide with a diameter of 110 mm. The color of the anchor sleeve is grey. The special compound screw is made of galvanised steel and glass-fiber reinforced polyamide. The anchor is expanded by screwing the screw into the sleeve. It is possible to install the anchor flush or countersunk mounted to the surface of the insulation.

The product description is given in Annex A.

2 Specification of the intended use in accordance with the applicable European Assessment Document (hereinafter EAD)

The performances given in Section 3 are only valid if the anchor is used in compliance with the specifications and conditions given in Annex B1 to B3.

The provisions made in this European Technical Assessment are based on an assumed intended working life of the anchor of 25 years.

The indications given on the working life cannot be interpreted as a guarantee given by the producer or Assessment Body, but are to be regarded only as a means for choosing the right products in relation to the expected economically reasonable working life of the works.

3 Performance of the product and references to the methods used for its assessment

3.1 Characteristics of product

Safety in case of fire (BWR 2):
No Performance Assessed.

Safety in use (BWR4):
The essential characteristics are detailed in Annex B2 and Annex C1 to C4.

Energy economy and heat retention (BWR6):
The essential characteristics are detailed in the Annex C3.

Other Basic Requirements are not relevant.

General aspects
The verification of durability is part of testing of the essential characteristics. Durability is only ensured if the specifications of intended use according to Annex B are taken into account.

3.2 Methods of assessment

The assessment of fitness of the anchor for the intended use in relation to the requirements for mechanical resistance and stability and safety in use in the sense of the Basic Requirements 4 has been made in accordance with the EAD 330196-01-0604 Plastic anchors made of virgin or non-virgin material for fixing of external thermal insulation composite systems with rendering.

4 Assessment and verification of constancy of performance (AVCP)

4.1 AVCP system

According to the decision 97/463/EC of the European Commission, the system(s) of assessment and verification of constancy of performance (see Annex V to Regulation (EU) No 305/2011) is 2+.

TermoZ CS II 8

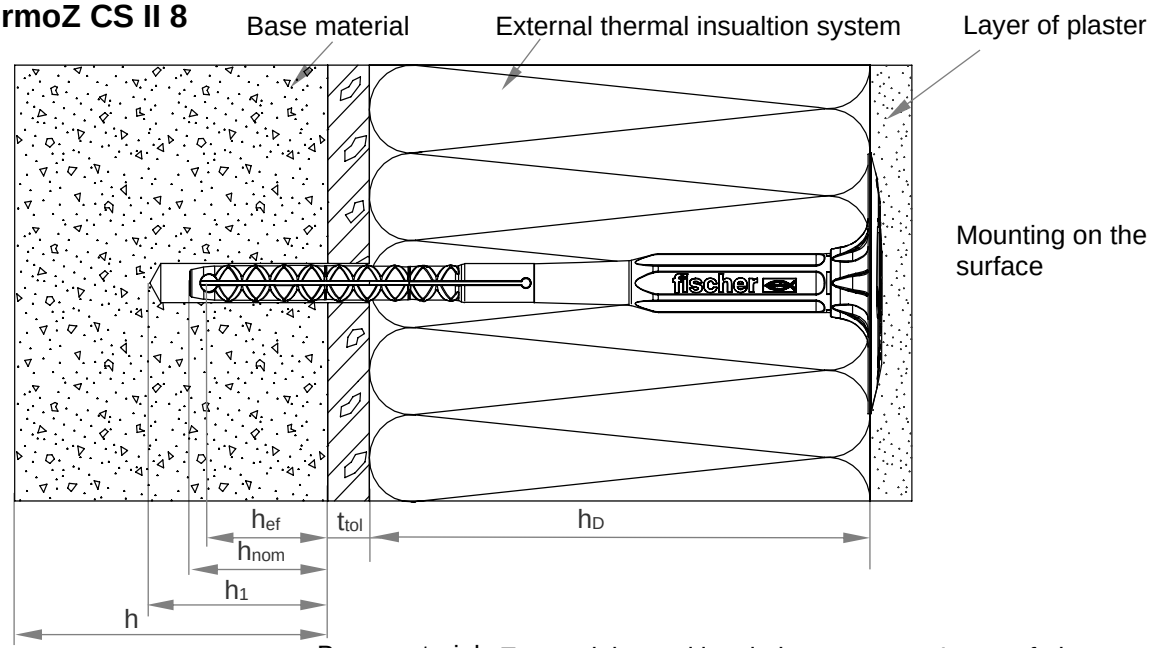

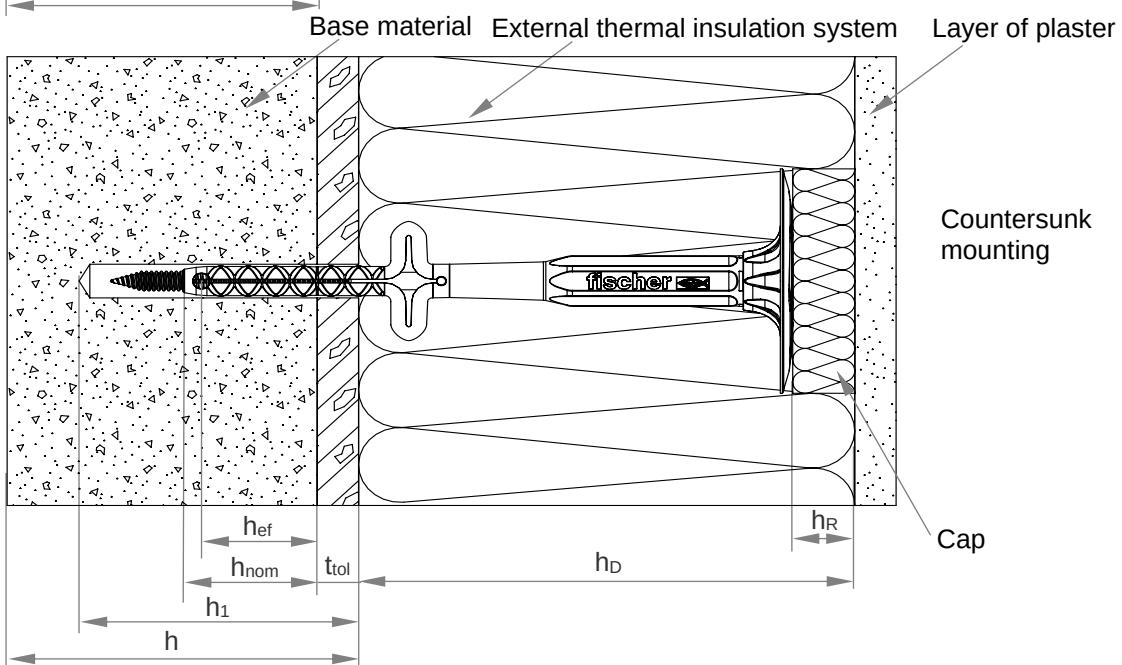

Legend

h_{nom}	=	Overall plastic anchor embedment depth in the base material
h_{ef}	=	Effective anchorage depth in the base material
h_1	=	Depth of drilled hole to deepest point
h	=	Thickness of member (wall)
h_D	=	Thickness of insulation material
t_{tol}	=	Thickness of equalising layer and / or non-load-bearing coating
h_R	=	Thickness of cap

Figures not to scale

fischer TermoZ CS II 8 and fischer TermoZ CS II 8 DT 110 V

Product description
Installed anchor TermoZ CS II 8

Annex A1

TermoZ CS II 8 DT 110 V

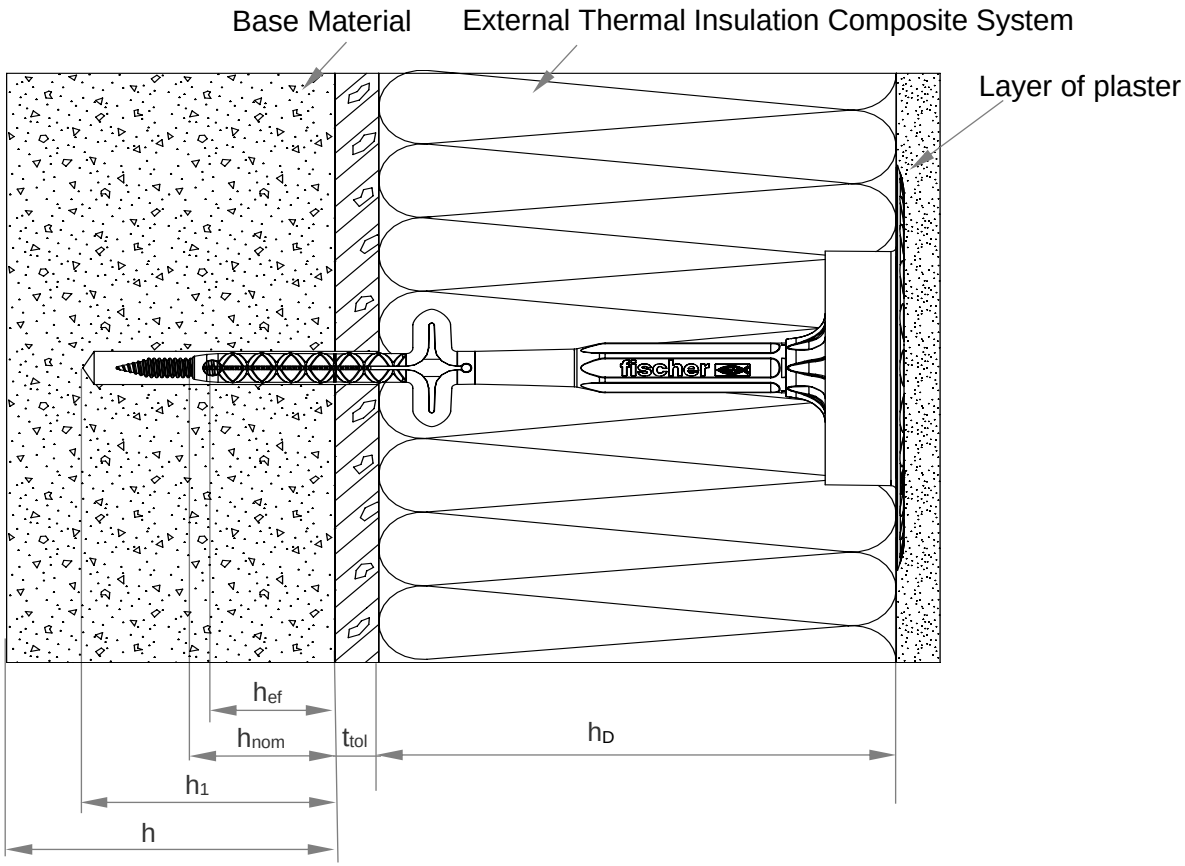

Legend

h_{nom}	=	Overall plastic anchor embedment depth in the base material
h_{ef}	=	Effective anchorage depth in the base material
h_1	=	Depth of drilled hole to deepest point
h	=	Thickness of member (wall)
h_D	=	Thickness of insulation material
t_{tol}	=	Thickness of equalising layer and / or non-load-bearing coating

Figure not to scale

fischer TermoZ CS II 8 and fischer TermoZ CS II 8 DT 110 V	**Annex A2**
Product description Installed anchor TermoZ CS II 8 DT 110 V	

Anchor sleeve / Specific screw for TermoZ CS II 8/95-255

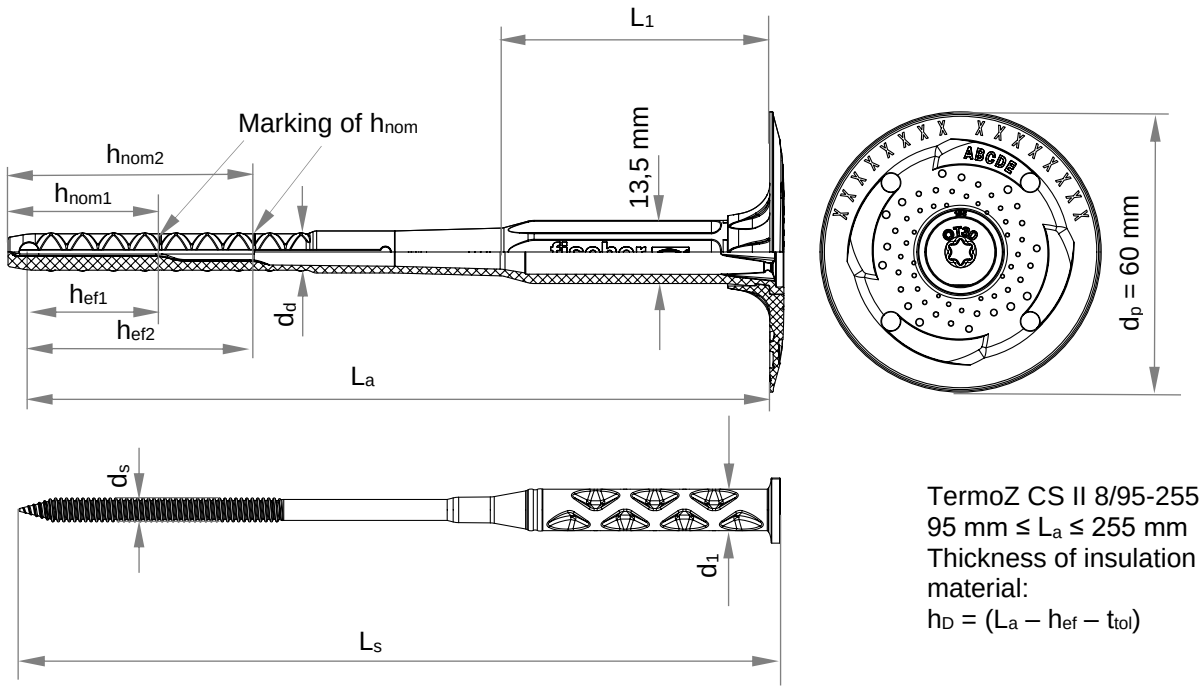

TermoZ CS II 8/95-255
95 mm ≤ L_a ≤ 255 mm
Thickness of insulation material:
$h_D = (L_a - h_{ef} - t_{tol})$

Anchor sleeve / Specific screw for TermoZ CS II 8/275-455

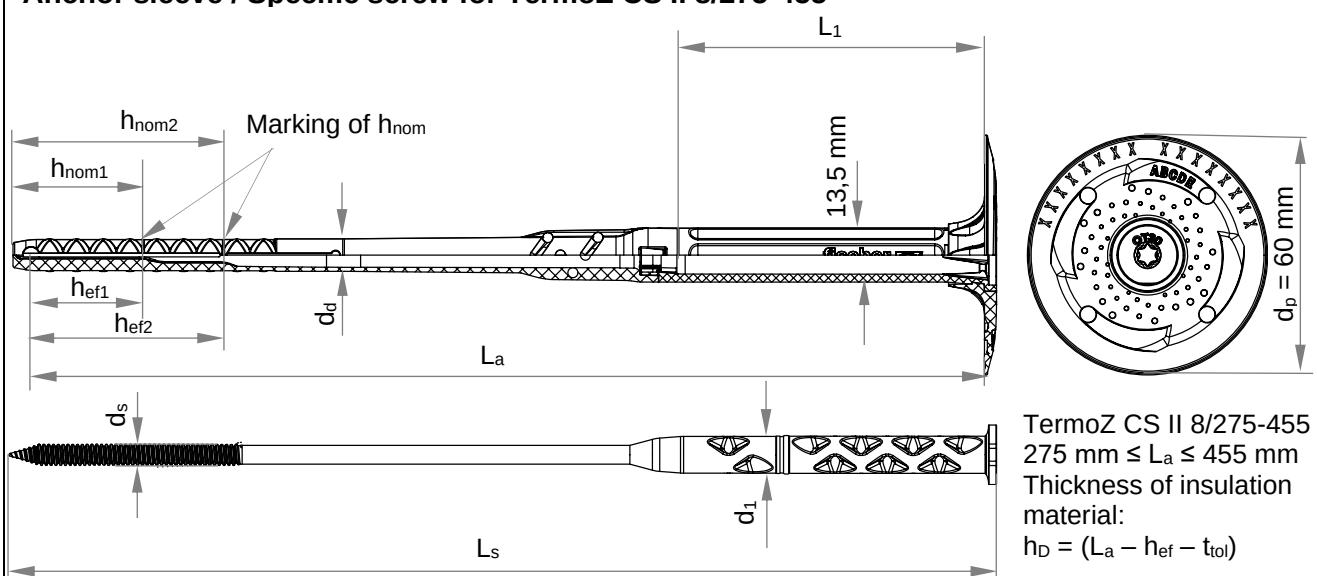

TermoZ CS II 8/275-455
275 mm ≤ L_a ≤ 455 mm
Thickness of insulation material:
$h_D = (L_a - h_{ef} - t_{tol})$

Figures not to scale

fischer TermoZ CS II 8 and fischer TermoZ CS II 8 DT 110 V	**Annex A3**
Product description Dimensions TermoZ CS II 8	

TermoZ CS II 8/115-255 DT 110 V

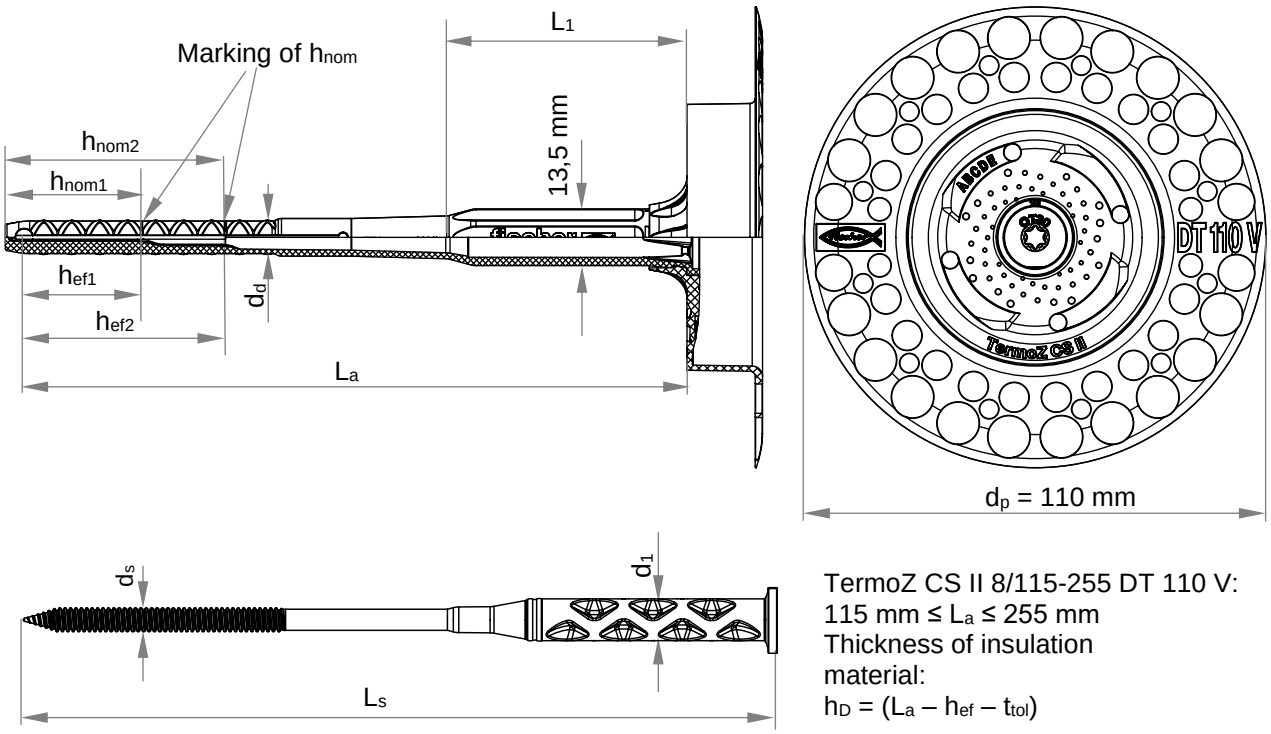

TermoZ CS II 8/115-255 DT 110 V:
115 mm ≤ L_a ≤ 255 mm
Thickness of insulation material:
$h_D = (L_a – h_{ef} – t_{tol})$

TermoZ CS II 8/275-455 DT 110 V

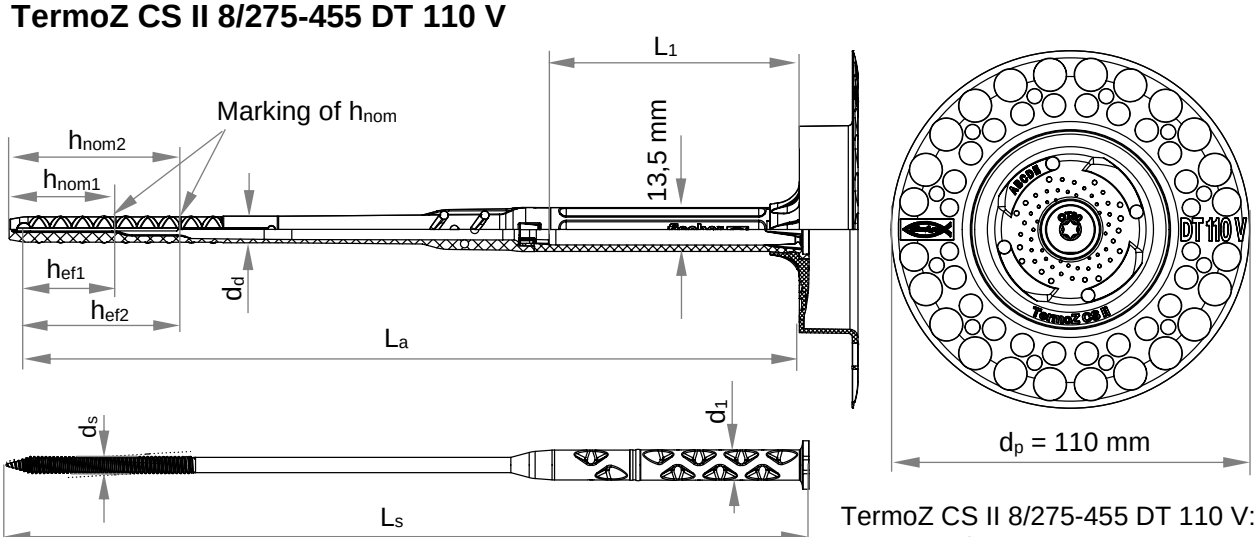

TermoZ CS II 8/275-455 DT 110 V:
275 mm ≤ L_a ≤ 455 mm
Thickness of insulation material:
$h_D = (L_a – h_{ef} – t_{tol})$

Figures not to scale

fischer TermoZ CS II 8 and fischer TermoZ CS II 8 DT 110 V	**Annex A4**
Product description Dimensions TermoZ CS II 8 DT 110 V	

Setting tool with SDS adapter or hexagonal adapter available

Countersunk setting of anchor TermoZ CS II 8 and setting of TermoZ CS II 8 DT 110 V
Note: not possible for TermoZ CS II **8/95**

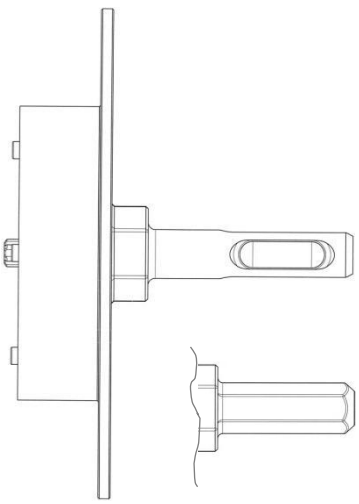

Optional: plain surface setting
Note: not possible for TermoZ CS II 8 **DT 110 V**

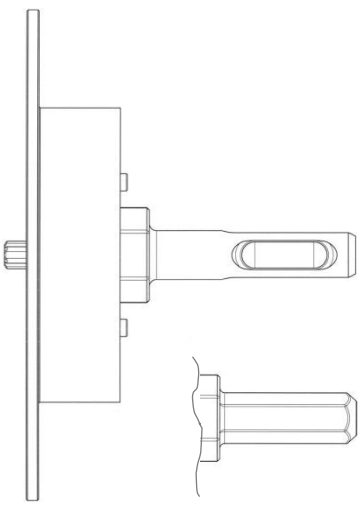

Cap

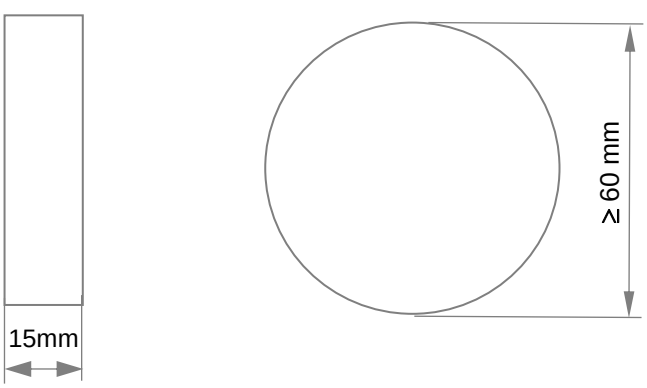

Figures not to scale

fischer TermoZ CS II 8 and fischer TermoZ CS II 8 DT 110 V	**Annex A5**
Product description Setting tool and dimensions of cap	

Table A6.1: Marking of plates

	Designation
Name of anchor	**TermoZ CS II 8**
Example	TermoZ CS II ABCDE, (optional), CE (optional), Ø 8 (optional) xxxxx additional marks possible
Name of anchor	**TermoZ CS II 8 DT 110 V**
Example	TermoZ CS II ABCDE DT 110 V

Table A6.2: Dimensions of TermoZ CS II 8

Anchor type	Anchor sleeve			Shaft		Specific screw		
	d_d	h_{nom}	h_{ef}	L_a	L_1	d_s	l_s	d_1
TermoZ CS II 8/95-115	8	32,5	25	95-115	42	5,4	L_a + 10	9,5
TermoZ CS II 8/135-255		32,5	25	135-255	52			
		52,5	45					
TermoZ CS II 8/275-295		32,5	25	275-295	76			
		52,5	45					
TermoZ CS II 8/315-375		32,5	25	315-375	156			
		52,5	45					
TermoZ CS II 8/395-455		32,5	25	395-455	236			
		52,5	45					

Table A6.3: Dimensions of TermoZ CS II 8 DT 110 V

Anchor type	Anchor sleeve			Shaft		Specific screw		
	d_d	h_{nom}	h_{ef}	L_a	L_1	d_s	l_s	d_1
TermoZ CS II 8/115 DT 110 V	8	32,5	25	95-115	42	5,4	L_a + 10	9,5
TermoZ CS II 8/135-255 DT110 V		32,5	25	135-255	52			
		52,5	45					
TermoZ CS II 8/275-295 DT 110 V		32,5	25	275-295	76			
		52,5	45					
TermoZ CS II 8/315-375 DT 110 V		32,5	25	315-375	156			
		52,5	45					
TermoZ CS II 8/395-455 DT 110 V		32,5	25	395-455	236			
		52,5	45					

All dimensions in [mm]

fischer TermoZ CS II 8 and fischer TermoZ CS II 8 DT 110 V	**Annex A6**
Product description Marking of plates Dimensions of anchors	

Table A7.1: Materials

Designation	Material
Anchor sleeve / shaft	PP, colour: grey
Specific compound screw TermoZ CS II 8 / TermoZ CS II 8 DT 110 V	PA 6 GF with galvanised steel Zn5/Ag or Zn5/An as per EN ISO 4042:2018
Cap	Soft wood fibre; polystyrene; mineral wool
Anchor plate / Slip-on plate	PA 6 GF, colour: grey, blue, green, orange, red, yellow, black, mocca-latte

Drawing of the slip-on plate (e.g. DT 140)

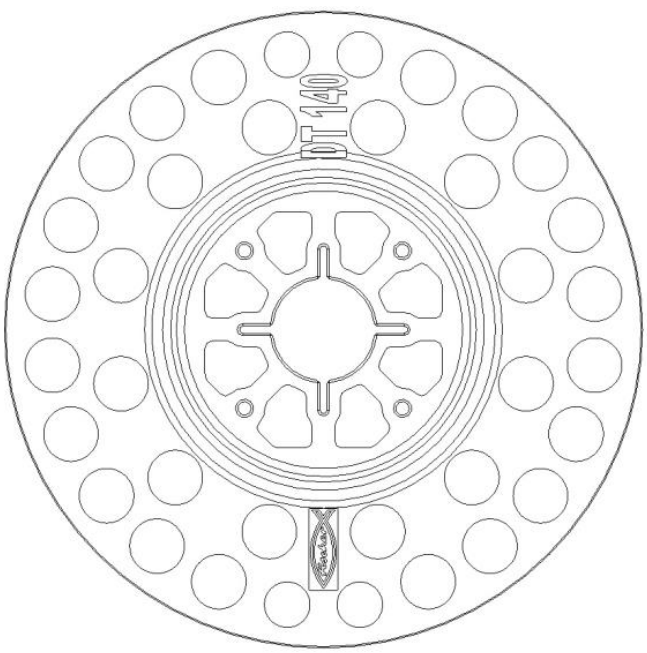

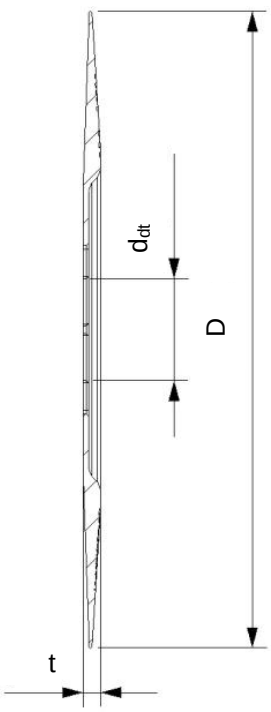

Table A7.2: Slip-on plates, diameters

Slip-on plate	D [mm]	d_{dt} [mm]	t [mm]
DT 90 / DT 110 / DT 140	90 / 110 / 140	22,5	3,9

Figures not to scale

fischer TermoZ CS II 8 and fischer TermoZ CS II 8 DT 110 V	**Annex A7**
Product description Materials and dimensions of slip-on plates	

Specifications of intended use

Anchorages subject to:

- The anchor may only be used for transmission of wind suction loads and shall not be used for the transmission of dead loads of the thermal insulation composite system.

Base materials:

- Normal weight concrete without fibres ≥ C12/15 (base material group “A”) as per EN 206:2013+A1:2016, see Annex C1.
- Solid masonry (base material group “B”), as per EN 771-1:2011+A1:2015, EN 771-2:2011+A1:2015, EN 771-3:2011+A1:2015, see Annex C1.
- Hollow or perforated masonry (base material group “C”), as per EN 771-1:2011+A1:2015, EN 771-2:2011+A1:2015 or EN 771-3:2011+A1:2015, see Annex C1 and C2.
- Lightweight aggregate concrete (base material group “D”), as per EN 1520:2011 / EN 771-3:2011+A1:2015, see Annex C2.
- Autoclaved aerated concrete (base material group “E”), as per EN 771-4:2011+A1:2015, see Annex C2.
- For other comparable materials of the base material groups “A”, “B”, “C”, “D” and “E” the characteristic resistance of the anchor may be determined by job site tests according to EOTA Technical Report TR 051 Edition April 2018.

Temperature Range:

- 0 °C to + 40 °C (max. short term temperature + 40 °C and max. long term temperature + 24 °C) of the base material.

Design:

- The anchorages are designed under the responsibility of an engineer experienced in anchorages and masonry work with the partial safety factors γ_M = 2,0 und γ_F = 1,5 if there are no other national regulations.
- Verifiable calculation notes and drawings are prepared taking account of the loads to be anchored. The position of the anchors is indicated on the design drawings.
- Fasteners are only to be used for multiple fixings of thermal insulation composite systems.

Installation:

- Drilling method see Annex C1 and C2.
- Anchor installation carried out by appropriately qualified personnel and under the supervision of the person responsible for technical matters on the site.
- Installation temperature of the anchor from 0 °C to + 40 °C.
- Exposure to UV due to solar radiation of the anchor not protected by rendering ≤ 6 weeks.

fischer TermoZ CS II 8 and fischer TermoZ CS II 8 DT 110 V	**Annex B1**
Intended use Specifications	

Table B2.1: Installation parameters for base material groups “A” concrete, “B” solid bricks, “C” hollow or perforated bricks, “D” lightweight aggregate concrete and “E” autoclaved aerated concrete

Anchor type				TermoZ CS II 8/95-455 TermoZ CS II 8/115-455 DT 110 V	
				flush	countersunk[1)]
Nominal drill hole diameter	d_0	=	[mm]	**8**	**8**
Cutting diameter of drill bit	d_{cut}	≤	[mm]	**8,45**	**8,45**
Depth of drill hole to deepest point	h_1	≥	[mm]	**40**	**55**
Overall plastic anchor embedment depth in the base material	h_{nom}	≥	[mm]	**32,5**	**32,5**
Effective anchorage depth in the base material	h_{ef}	≥	[mm]	**25**	**25**

[1)] Not possible for TermoZ CS II 8/95.

Table B2.2: Installation parameters alternative option for base material group “E” for higher loads

Anchor type				TermoZ CS II 8/135-455 TermoZ CS II 8/135-455 DT 110 V	
				flush	countersunk
Nominal drill hole diameter	d_0	=	[mm]	**8**	**8**
Cutting diameter of drill bit	d_{cut}	≤	[mm]	**8,45**	**8,45**
Depth of drill hole to deepest point	h_1	≥	[mm]	**60**	**75**
Overall plastic anchor embedment depth in the base material	h_{nom}	≥	[mm]	**52,5**	**52,5**
Effective anchorage depth in the base material	h_{ef}	≥	[mm]	**45**	**45**

Table B2.3: Minimum thickness of member, edge distance and spacing in all regulated base material groups

Anchor type				TermoZ CS II 8/95-455 TermoZ CS II 8/115-455 DT 110 V
Minimum thickness of member	h_{min}	=	[mm]	**100**
Minimum spacing	s_{min}	=	[mm]	**100**
Minimum edge distance	c_{min}	=	[mm]	**100**

Scheme of distances and spacing
for base material groups “A”, concrete, group “B” solid bricks, group “C” hollow or perforated masonry, group “d” lightweight aggregate concrete, group “E” autoclaved aerated concrete

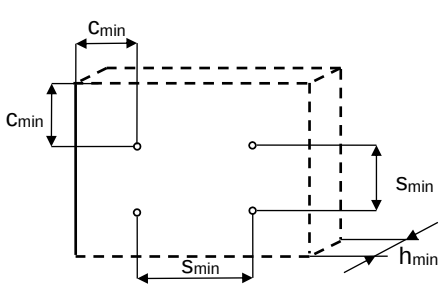

Figure not to scale

fischer TermoZ CS II 8 and fischer TermoZ CS II 8 DT 110 V

Intended use
Installation parameters depending on the base material groups
Minimum thickness of member, edge distances and spacings

Annex B2

Installation instruction

Standard setting of TermoZ CS II 8 (plain surface setting) without setting tool

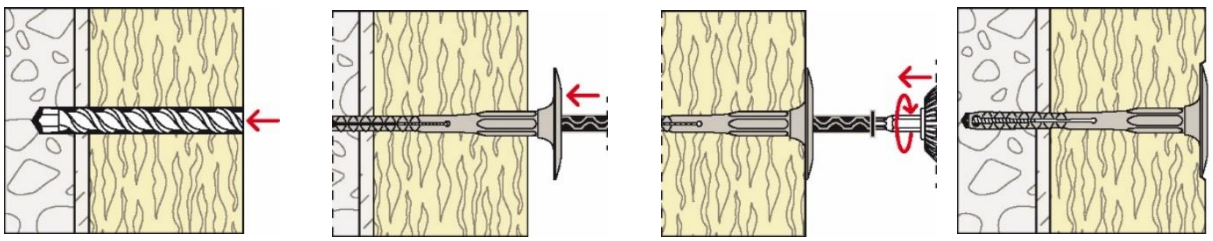

1. Drill hole by corres-ponding drilling method

2.Insert anchor manually

3.Set anchor by machine

4.Correctly installed anchor

Setting of TermoZ CS II 8 (plain surface setting) by setting tool

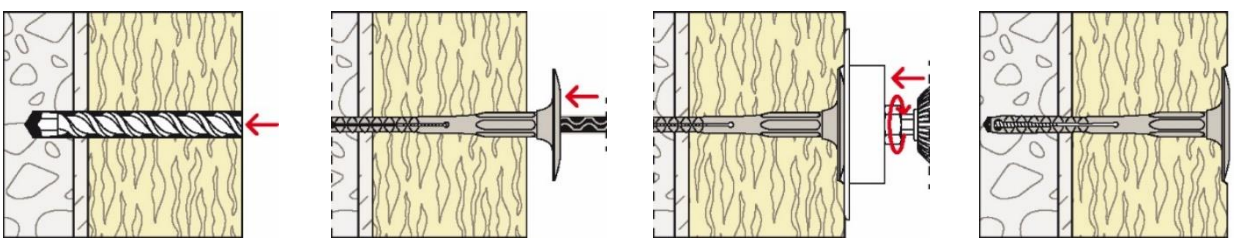

1.Drill hole by corres-ponding drilling method

2.Insert anchor manually

3.Set anchor by setting tool with the machine

4.Correctly installed anchor

Setting of TermoZ CS II 8 (countersunk setting) by setting tool

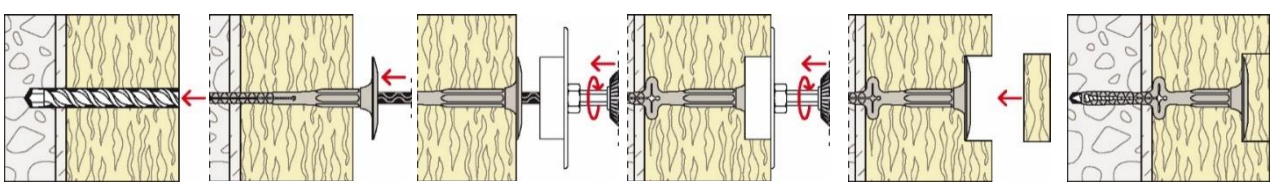

1.Drill hole by corresponding drilling method

2.Insert anchor manually

3. Put on setting tool

4. Set anchor by setting tool with the machine

5.Put on cap

6.Correctly installed anchor

Setting of TermoZ CS II 8 DT 110 V by setting tool

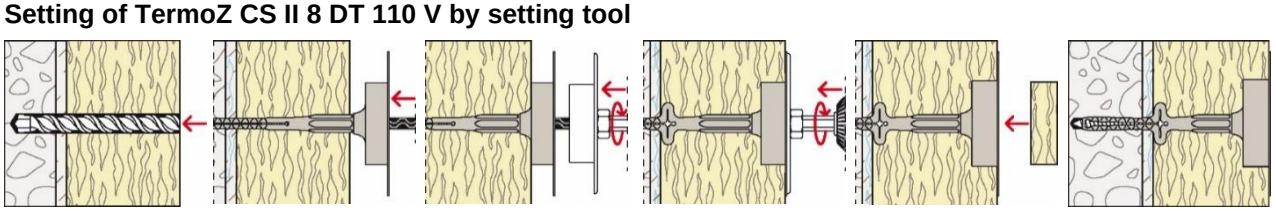

1.Drill hole by corresponding drilling method

2.Insert anchor manually

3. Put on setting tool

4. Set anchor by setting tool with the machine

5.Put on cap

6.Correctly installed anchor

fischer TermoZ CS II 8 and fischer TermoZ CS II 8 DT 110 V	**Annex B3**
Intended use Installation instruction	

Table C1.1: Characteristic resistance to tension loads N_{Rk} for single anchor TermoZ CS II and TermoZ CS II 8 DT 110 V

Base material	Group	Bulk density ρ [kg/dm³]	Mean compressive strength / minimum compressive strength single brick acc. to EN 771 [N/mm²]	Remarks	Drilling method[1)]	Char. resistance to tension loads N_{Rk} [kN]
Concrete ≥ C12/15 to ≤ C50/60 EN 206:2013+A1:2016	A	-	-	-	H	**1,50**
Weather resistant concrete shell ≥ C20/25 EN 206:2013+A1:2016	A	-	-	Thickness h ≥ 40 mm.	H	**1,50**
Solid clay brick, Mz, as per EN 771-1:2011+A1:2015	B[2)]	≥ 1,8	≥ 25/20	-	H	**1,50**
Calcium silicate solid brick, KS, as per EN 771-2:2011+A1:2015	B[2)]	≥ 1,4	≥ 15/12 ≥ 25/20	-	H	**1,50**
Solid lightweight concrete block, Vbl, as per EN 771-3:2011+A1:2015	B[2)]	≥ 1,4	≥ 10/8	-	H	**1,20**
Solid concrete block, Vbn, as per EN 771-3:2011+A1:2015	B[2)]	≥ 2,0	≥ 15/12 ≥ 25/20	-	H	**1,50**

[1)] H = Hammer drilling, R = Rotary drilling.
[2)] Vertically perforation ≤ 15%; cross section reduced by perforation vertically to the resting area.

fischer TermoZ CS II 8 and fischer TermoZ CS II 8 DT 110 V	**Annex C1**
Performances Characteristic resistance to tension loads	

Table C2.1: Characteristic resistance to tension loads N_{Rk} for single anchor TermoZ CS II 8 and TermoZ CS II 8 DT 110 V

Base material	Group	Bulk density ρ [kg/dm³]	Mean compressive strength / minimum compressive strength single brick acc. to EN 771 [N/mm²]	Remarks	Drilling method[1)]	Char. resistance to tension loads N_{Rk} [kN]
Vertically perforated clay brick, Hlz, as per EN 771-1:2011+A1:2015	C[3)]	≥ 0,9	≥ 15/12	Exterior web thickness ≥ 12 mm.	R	**1,00**
			≥ 15/12		H	**0,65**
		≥ 1,6	≥ 60/48		R	**1,50**
			≥ 60/48		H	**1,50**
Hollow calcium silicate brick,KSL, as per EN 771-2:2011+A1:2015	C[3)]	≥ 1,4	≥ 15/12	Exterior web thickness ≥ 23 mm.	H	**1,50**
Hollow brick lightweight concrete, Hbl, as per EN 771-3:2011+A1:2015	C[3)]	≥ 0,9	≥ 5/4	Exterior web thickness ≥ 16 mm.	H	**0,50**
Hollow brick concrete, Hbn, as per EN 771-3: 2011+A1:2015	C[3)]	≥ 1,2	≥ 5/4	Exterior web thickness ≥ 38 mm.	H	**0,75**
			≥ 7,5/6			**1,10**
			≥ 10/8			**1,50**
			≥ 12,5/10			**1,50**
Lightweight aggregate concrete, LAC, as per EN 1520:2011 EN 771-3:2011+A1:2015	D	≥ 0,9	≥ 5/4	-	H	**0,95**
			≥ 7,5/6			**1,50**
Autoclaved aerated concrete blocks, AAC, as per EN 771-4: 2011+A1:2015 h_{nom} = 32,5 mm	E	≥ 0,50	≥ 5/4	-	R	**0,65**
Autoclaved aerated concrete blocks, AAC, as per EN 771-4: 2011+A1:2015 h_{nom} = 52,5 mm[2)]	E					**1,10**

[1)] H = Hammer drilling, R = Rotary drilling.
[2)] Not possible for TermoZ CS II 8/95 and TermoZ CS II 8/115 and TermoZ CS II 8/115 DT 110 V.
[3)] Vertically perforation > 15 % and ≤ 50 %, cross section reduced by perforation vertically to the resting area.

fischer TermoZ CS II 8 and fischer TermoZ CS II 8 DT 110 V	**Annex C2**
Performances Characteristic resistance to tension loads	

Table C3.1: Plate stiffness acc. to EOTA Technical Report TR 026:2016-05

Anchor type	Max. size of the anchor plate d_p [mm]	Load resistance of the anchor plate [kN]	Plate stiffness c [kN/mm]
TermoZ CS II 8	60	2,61	1,29
TermoZ CS II 8 DT 110 V	110	2,61	1,29

Table C3.2: Point thermal transmittance acc. to EOTA Technical Report TR 025:2016-05

TermoZ CS II 8 and TermoZ CS II 8 DT 110 V	h_{nom} [mm]	Thickness of insulation material h_D [mm]	Point thermal transmittance χ [W/K] Base material groups A	B	C	D	E
Flush mounted	32,5	60	0,002	0,001			0,000
		80	0,002			0,001	
		100 - 120	0,001				
		140 - 200	0,002			0,001	
		220 - 260	0,002				0,001
		280 - 300	0,001				0,000
		320 - 340	0,001				
		360 – 400	0,000				
		420	0,001	0,000			
	52,5	100 - 120	-				0,001
		140 - 240	-				0,001
		320	-				0,001
		400	-				0,000
Countersunk mounted	32,5	80 - 200	0,001				
		220	0,002				0,001
		240	0,002	0,001			
		260	0,002		0,001		
		280	0,001	0,000			
		300	0,001			0,000	
		320 – 340	0,001				0,000
		360-420	0,000				
	52,5	100 - 120	-				0,000
		140 - 240	-				0,001
		320	-				0,000
		400	-				0,000

fischer TermoZ CS II 8 and fischer TermoZ CS II 8 DT 110 V

Performances
Plate stiffness and point thermal transmittance

Annex C3

Table C4.1: Displacements of the TermoZ CS II 8 and TermoZ CS II 8 DT 110 V

Base material		Mean compressive strength / minimum compressive strength single brick acc. to EN 771 [N/mm²]	Tension load N_{Rd} [kN]	Displace-ments $\Delta(\delta_N)$ [mm]
Concrete ≥ C12/15 ≤ C50/60; EN 206:2013+A1:2016		-	0,50	< 0,3
Weather resistant concrete shell ≥ C20/25; EN 206:2013+A1:2016		-	0,50	< 0,3
Clay brick, Mz, as per EN 771-1:2011+A1:2015		≥ 25/20	0,50	< 0,5
Calcium silicate solid brick, KS, as per EN 771-2:2011+A1:2015		≥ 15/12	0,50	< 0,3
		≥ 25/20	0,50	
Solid lightweight concrete block, Vbl, as per EN 771-3:2011+A1:2015		≥ 10/8	0,43	< 0,4
Solid concrete block, Vbn, as per EN 771-3:2011+A1:2015		≥ 15/12	0,50	< 0,3
		≥ 25/20	0,50	
Vertically perforated clay brick, Hlz, as per EN 771-1:2011+A1:2015	rotary drilling	≥ 15/12	0,33	< 0,5
	hammer drilling		0,22	< 0,3
	rotary drilling	≥ 60/48	0,50	< 0,4
	hammer drilling		0,50	
Hollow calcium silicate brick, KSL, as per EN 771-2:2011+A1:2015		≥ 15/12	0,50	< 0,4
Hollow brick lightweight concrete, Hbl, as per EN 771-3:2011+A1:2015		≥ 5/4	0,17	< 0,2
Hollow brick concrete, Hbn, as per EN 771-3:2011+A1:2015		≥ 5/4	0,25	< 0,2
		≥ 7,5/6	0,37	< 0,3
		≥ 10/8	0,50	< 0,4
		≥ 12,5/10	0,50	< 0,4
Lightweight Aggregate Concrete, ≥ LAC as per EN 1520:2011 / EN 771-3:2011+A1:2015		≥ 5/4	0,32	< 0,5
		≥ 7,5/6	0,50	< 0,5
Autoclaved aerated concrete blocks, AAC, as per EN 771-4:2011+A1:2015	h_{nom} = 32,5 mm	≥ 5/4	0,22	< 0,2
	h_{nom} = 52,5 mm[1)]		0,37	

[1)] Not possible for TermoZ CS II 8/95 and TermoZ CS II 8/115 and TermoZ CS II 8/115 DT 110 V.

fischer TermoZ CS II 8 and fischer TermoZ CS II 8 DT 110 V	**Annex C4**
Performances Displacements	