IZJAVA O SVOJSTVIMA

DoP 0238

za fischer injekcijski sustav FIS V Zero (visokoučinkovit mort za uporabu u betonu) HR

1. Jedinstveni identifikator tipa proizvoda: **DoP 0238**

2. Namjena korištenja: **Naknadno učvršćivanje u napuknutom i ne-napuknutom betonu, vidi dodatak, posebno priloge B1 - B10.**

3. Proizvođač: **fischerwerke GmbH & Co. KG, Otto-Hahn-Straße 15, 79211 Denzlingen, Njemačka**

4. Ovlašteni zastupnik: **–**

5. Sistem/i od AVCP: **1**

6. Europski dokument za ocjenjivanje: **EAD 330499-01-0601, Edition 04/2020**
   Europska tehnička ocjena: **ETA-20/0572; 2021-04-28**
   Tijelo za tehničko ocjenjivanje: **DIBt- Deutsches Institut für Bautechnik**
   Prijavljeno tijelo/prijavljena tijela: **2873 TU Darmstadt**

7. Objavljena svojstva:
   Mehanička otpornost i stabilnost (BWR 1)
   Karakteristični otpor na opterećenje (statičko i kvazi-statičko opterećenje):
   Otpornost na lom čelika: Priloge C1 - C3 — E_S= 210 000 MPa
   Otpornost na kombinaciju čupanja I otkazivanja betona: Priloge C4 - C7 — $\tau_{Rk,100}$= NPD
   Otpornost na lom betona: Prilog C4
   Udaljenost ruba kako bi se spriječilo cijepanje pod opterećenjem: Prilog C4
   Robusnost: Priloge C4 - C7
   Maksimalni zakretni moment: Priloge B3, B4, B6
   Minimalna udaljenost od ruba i razmak: Priloge B3 - B6

   Karakteristični otpor na smicanje (statičko i kvazi-statičko opterećenje):
   Otpornost na lom čelika: Priloge C1 - C3
   Otpornost na otkazivanje: Prilog C4
   Otpornost na lom ruba betona: Prilog C4

   Karakteristični otpor i pomaci za kategorije seizmičke učinkovitosti C1 i C2:
   Otpornost na vlačno opterećenje (napetost), pomaci, kategorija C1: NPD
   Otpornost na vlačno opterećenje (napetost), pomaci, kategorija C2: NPD
   Otpornost na posmično opterećenje, pomaci, kategorije C1: NPD
   Otpornost na posmično opterećenje, pomaci, kategorije C2: NPD
   Faktor prstenaste pukotine: NPD

   Pomaci pod kratkoročnim i dugoročnim opterećenjem:
   Pomaci pod kratkoročnim i dugoročnim opterećenjem: Priloge C8, C9

   Higijena, zdravlje i okoliš (BWR 3)
   Sadržaj, emisija i / ili oslobađanje opasnih tvari: NPD

8. Odgovarajuća tehnička dokumentacija i/ili specifična tehnička dokumentacija: **–**

Svojstva gore navedenog proizvoda su u skladu sa skupom izjava o svojstvima.Ova izjava o svojstvima se izdaje, u skladu sa Europskom regulativom (EU) Br. 305/2011, pod punom odgovornošću gore navedenog proizvođača

Za proizvođača i u njegovo ime potpisao:

Dr. Oliver Geibig, Generalni direktor poslovne jedinice i inženjering

Jürgen Grün, Glavni direktor za kemiju i kvalitetu

Tumlingen, 2021-05-12

Ovaj DoP je pripremljen u različitim jezicima. U slučaju da postoji spor u tumačenju, engleska verzija će uvijek prevladati.

U aneksu se nalaze dodatni podaci na engleskom jeziku, koji ne podliježu zakonskoj regulativi.

Specific Part

1 Technical description of the product

The fischer injection system FIS V Zero is a bonded fastener consisting of an injection cartridge with injection mortar FIS V Zero and a steel element according to Annex A.

The steel element is placed into a drilled hole filled with injection mortar and is anchored via the bond between metal part, injection mortar and concrete.

The product description is given in Annex A.

2 Specification of the intended use in accordance with the applicable European Assessment Document

The performances given in Section 3 are only valid if the anchor is used in compliance with the specifications and conditions given in Annex B.

The verifications and assessment methods on which this European Technical Assessment is based lead to the assumption of a working life of the anchor of at least 50 years. The indications given on the working life cannot be interpreted as a guarantee given by the producer, but are to be regarded only as a means for choosing the right products in relation to the expected economically reasonable working life of the works.

3 Performance of the product and references to the methods used for its assessment

3.1 Mechanical resistance and stability (BWR 1)

Essential characteristic	Performance
Characteristic resistance to tension load (static and quasi-static loading)	See Annex C 1 to C 7, B 3 to B 6
Characteristic resistance to shear load (static and quasi-static loading)	See Annex C 1 to C 4
Displacements under short-term and long-term loading	See Annex C 8 to C 9
Characteristic resistance and displacements for seismic performance categories C1 and C2	No performance assessed

3.2 Hygiene, health and the environment (BWR 3)

Essential characteristic	Performance
Content, emission and/or release of dangerous substances	No performance assessed

4 Assessment and verification of constancy of performance (AVCP) system applied, with reference to its legal base

In accordance with the European Assessment Document EAD 330499-01-0601 the applicable European legal act is: [96/582/EC].

The system to be applied is: 1

Installation conditions part 1

fischer anchor rod

Pre-positioned installation

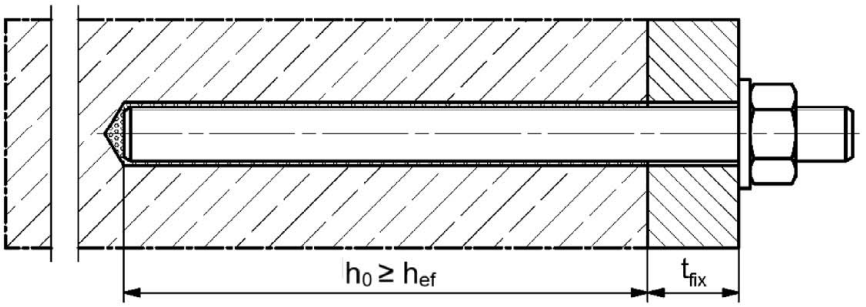

Push through installation (annular gap filled with mortar)

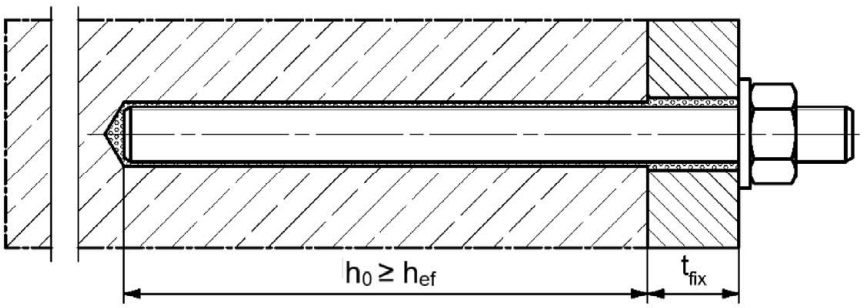

Pre-positioned or push through installation with subsequently injected fischer filling disc
(annular gap filled with mortar)

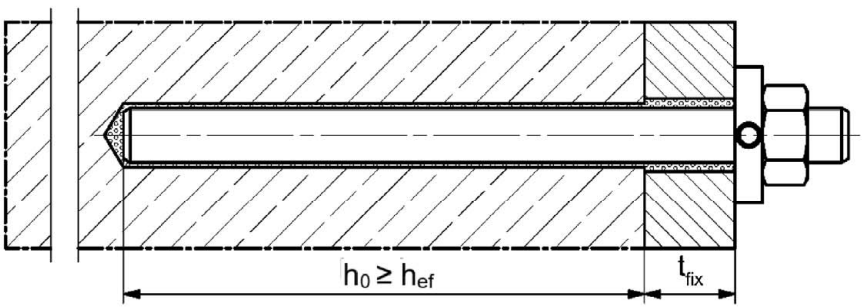

Figures not to scale

h_0 = drill hole depth

h_{ef} = effective embedment depth

t_{fix} = thickness of fixture

Installation conditions part 2

fischer internal threaded anchor RG M I

Pre-positioned installation

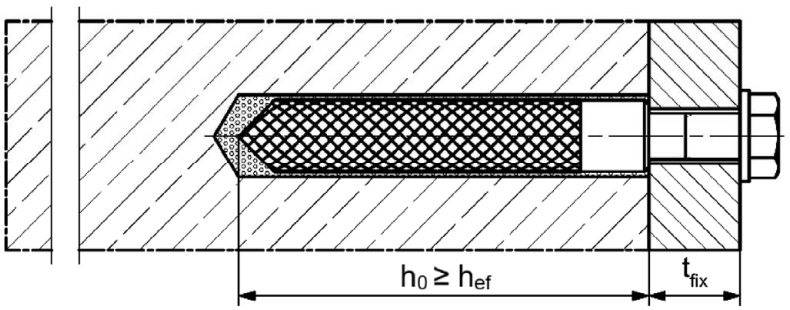

Pre-positioned installation with subsequently injected fischer filling disc (annular gap filled with mortar)

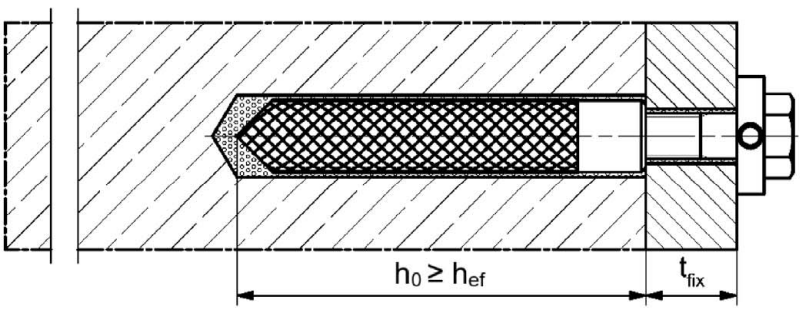

Figures not to scale

h_0 = drill hole depth

h_{ef} = effective embedment depth

t_{fix} = thickness of fixture

Installation conditions part 3

Reinforcing bar

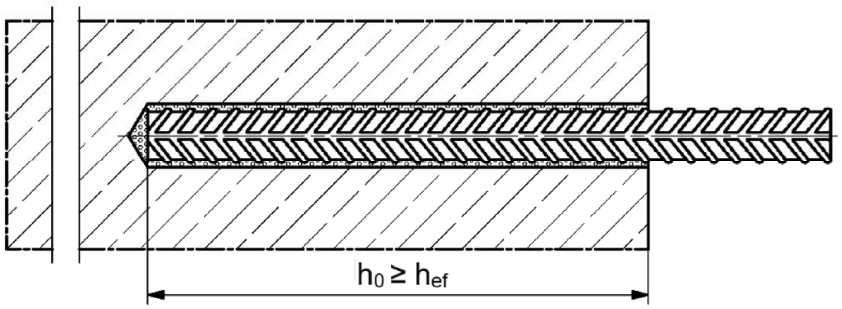

fischer rebar anchor FRA

Pre-positioned installation

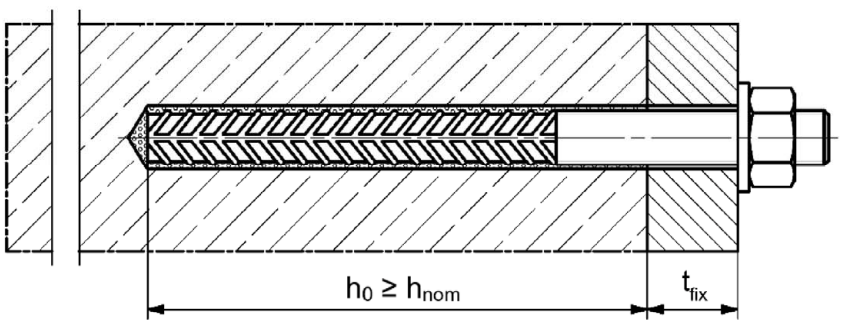

Push through installation (annular gap filled with mortar)

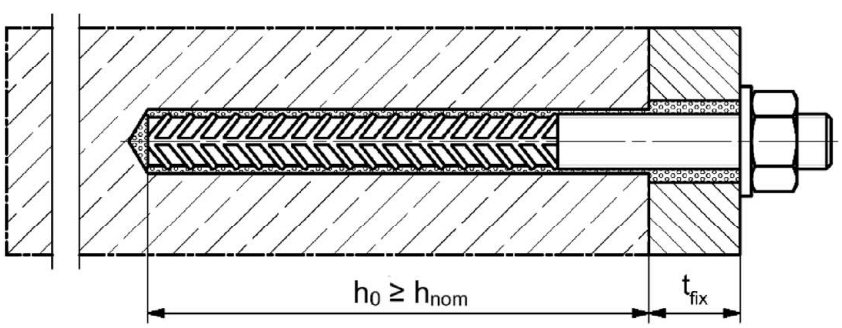

Figures not to scale

h_0 = drill hole depth

h_{ef} = effective embedment depth

t_{fix} = thickness of fixture

h_{nom} = overall fastener embedment depth in the concrete

Overview system components part 1

Injection cartridge (shuttle cartridge) with sealing cap; Sizes: 360 ml, 825 ml

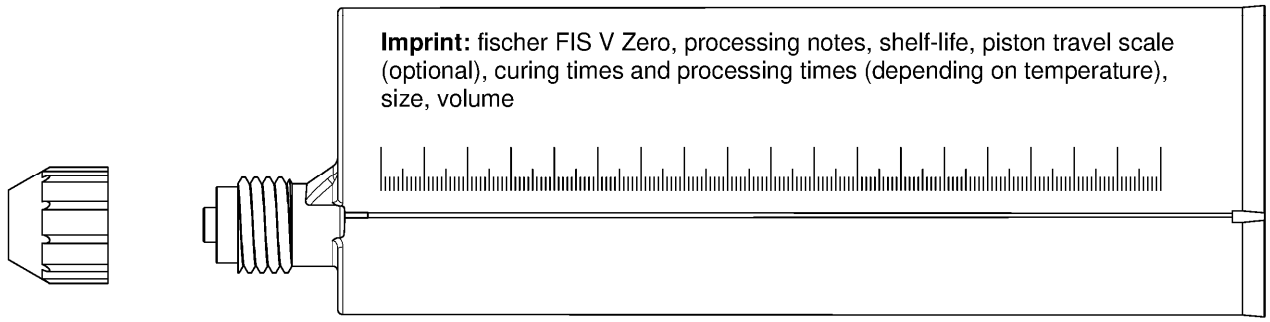

Injection cartridge (coaxial cartridge) with sealing cap; Sizes: 100 ml, 150 ml, 300 ml, 380 ml, 400 ml, 410 ml

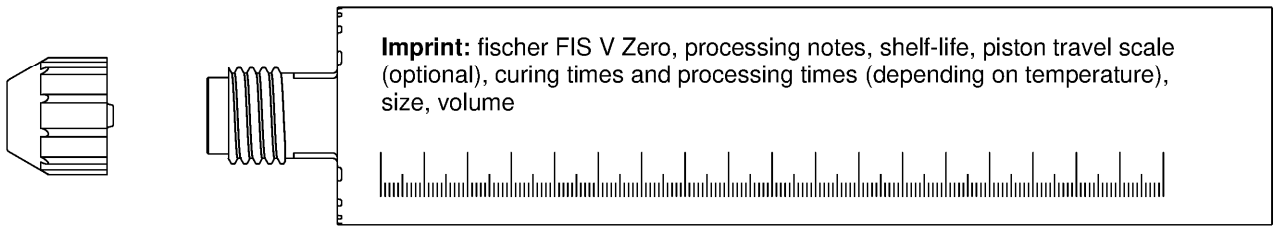

Static mixer FIS MR Plus for injection cartridges up to 410 ml

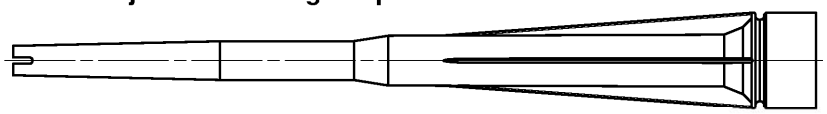

Static mixer FIS JMR for injection cartridges 825 ml

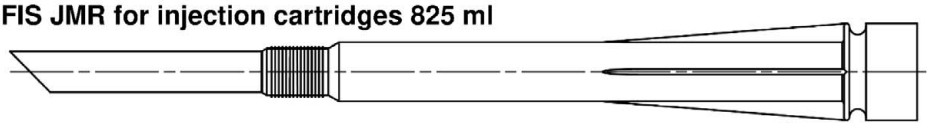

Injection adapter and extension tube Ø 9 for static mixer FIS MR Plus;
Injection adapter and extension tube Ø 9 or Ø 15 for static mixer FIS JMR

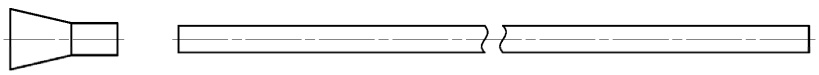

Cleaning brush BS

Blow-out pump

AB G

ABP:

Figures not to scale

fischer injection system FIS V Zero

Product description
Overview system components part 1;
cartridges / static mixer / accessories

Annex A 4

Overview system components part 2

fischer anchor rod

Size: M8, M10, M12, M16, M20, M24

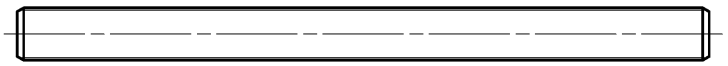

fischer internal threaded anchor RG M I

Size: M8, M10, M12, M16

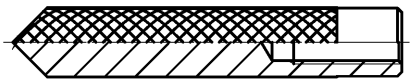

Screw / threaded rod / washer / hexagon nut

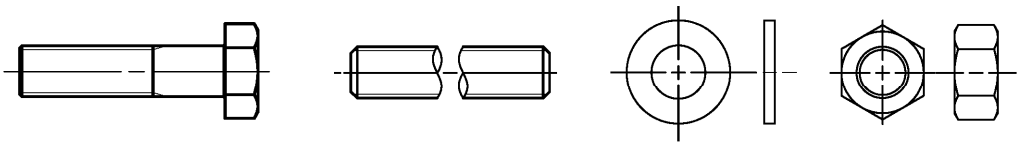

fischer filling disc with injection adapter

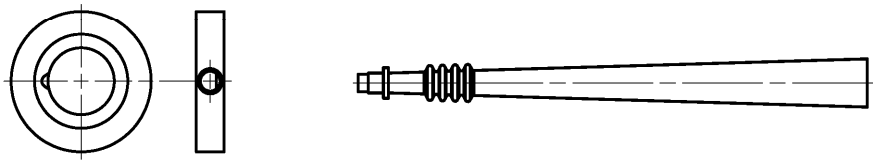

Reinforcing bar

Nominal diameter: ϕ8, ϕ10, ϕ12, ϕ14, ϕ16, ϕ20, ϕ22, ϕ24, ϕ25

fischer rebar anchor FRA

Size: M12, M16, M20, M24

Figures not to scale

Table A6.1: Materials

Part	Designation	Material		
1	Injection cartridge	Mortar, hardener, filler		
	Steel grade	Steel	Stainless steel R	High corrosion resistant steel HCR
		zinc plated	acc. to EN 10088-1:2014 Corrosion resistance class CRC III acc. to EN 1993-1-4:2015	acc. to EN 10088-1:2014 Corrosion resistance class CRC V acc. to EN 1993-1-4:2015
2	Anchor rod	Property class 4.8, 5.8 or 8.8; EN ISO 898-1:2013 zinc plated ≥ 5 µm, ISO 4042:2018/Zn5/An(A2K) or hot dip galvanised ≥ 40 µm EN ISO 10684:2004 f_{uk} ≤ 1000 N/mm² A_5 > 8% fracture elongation	Property class 50, 70 or 80 EN ISO 3506-1:2009 1.4401; 1.4404; 1.4578; 1.4571; 1.4439; 1.4362; 1.4062, 1.4662, 1.4462; EN 10088-1:2014 f_{uk} ≤ 1000 N/mm² A_5 > 8% fracture elongation	Property class 50 or 80 EN ISO 3506-1:2009 or property class 70 with f_{yk}= 560 N/mm² 1.4565; 1.4529; EN 10088-1:2014 f_{uk} ≤ 1000 N/mm² A_5 > 8% fracture elongation
3	Washer ISO 7089:2000	zinc plated ≥ 5 µm, ISO 4042:2018/Zn5/An(A2K) or hot dip galvanised ≥ 40 µm EN ISO 10684:2004	1.4401; 1.4404; 1.4578; 1.4571; 1.4439; 1.4362; EN 10088-1:2014	1.4565; 1.4529; EN 10088-1:2014
4	Hexagon nut	Property class 4, 5 or 8; EN ISO 898-2:2012 zinc plated ≥ 5 µm, ISO 4042:2018/Zn5/An(A2K) or hot dip galvanised ≥ 40 µm EN ISO 10684:2004	Property class 50, 70 or 80 EN ISO 3506-1:2009 1.4401; 1.4404; 1.4578; 1.4571; 1.4439; 1.4362; EN 10088-1:2014	Property class 50, 70 or 80 EN ISO 3506-1:2009 1.4565; 1.4529; EN 10088-1:2014
5	fischer internal threaded anchor RG M I	Property class 5.8 ISO 898-1:2013 zinc plated ≥ 5 µm, ISO 4042:2018/Zn5/An(A2K)	Property class 70 EN ISO 3506-1:2009 1.4401; 1.4404; 1.4578; 1.4571; 1.4439; 1.4362; EN 10088-1:2014	Property class 70 EN ISO 3506-1:2009 1.4565; 1.4529; EN 10088-1:2014
6	Commercial standard screw or threaded rod for fischer internal threaded anchor RG M I	Property class 5.8 or 8.8; EN ISO 898-1:2013 zinc plated ≥ 5 µm, ISO 4042:2018/Zn5/An(A2K) A_5 > 8 % fracture elongation	Property class 70 EN ISO 3506-1:2009 1.4401; 1.4404; 1.4578; 1.4571; 1.4439; 1.4362; EN 10088-1:2014 A_5 > 8 % fracture elongation	Property class 70 EN ISO 3506-1:2009 1.4565; 1.4529; EN 10088-1:2014 A_5 > 8 % fracture elongation
7	fischer filling disc similar to DIN 6319-G	zinc plated ≥ 5 µm, ISO 4042:2018/Zn5/An(A2K) or hot dip galvanised ≥ 40 µm EN ISO 10684:2004	1.4401; 1.4404; 1.4578; 1.4571; 1.4439; 1.4362; EN 10088-1:2014	1.4565;1.4529; EN 10088-1:2014
8	Reinforcing bar EN 1992-1-1:2004 and AC:2010, Annex C	Bars and de-coiled rods, class B or C with f_{yk} and k according to NDP or NCL of according to EN 1992-1-1/NA $f_{uk} = f_{tk} = k \cdot f_{yk}$ (A_5 > 8%)		
9	fischer rebar anchor FRA	Rebar part: Bars and de-coiled rods class B or C with f_{yk} and k according to NDP or NCL of EN 1992-1-1:2004+AC:2010 $f_{uk} = f_{tk} = k \cdot f_{yk}$	Threaded part: Property class 70 or for M24 PC 80, EN ISO 3506-1:2009 1.4401, 1.4404, 1.4571, 1.4578, 1.4439, 1.4362, 1.4062 acc. to EN 10088-1:2014 Corrosion resistance class CRC III acc. to EN 1993-1-4:2015 1.4565; 1.4529 acc. to EN 10088-1:2014 Corrosion resistance class CRC V acc. to EN 1993-1-4:2015	

Specifications of intended use (part 1)

Table B1.1: Overview use and performance categories

		FIS V Zero with …							
		Anchor rod		fischer internal threaded anchor RG M I		Reinforcing bar		fischer rebar anchor FRA	
Hammer drilling with standard drill bit		all sizes							
Hammer drilling with hollow drill bit (fischer „FHD“, Heller „Duster Expert“; Bosch „Speed Clean“; Hilti „TE-CD, TE-YD“)		Nominal drill bit diameter (d_0) 12 mm to 30 mm							
Static and quasi static load, in	uncracked concrete	all sizes	Tables: C1.1 C4.1 C5.1 C8.1	all sizes	Tables: C2.1 C4.1 C6.1 C8.2	all sizes	Tables: C3.1 C4.1 C7.1 C9.1	all sizes	Tables: C3.2 C4.1 C7.2 C9.2
	cracked concrete [2]	all sizes		all sizes		-[1]		-[1]	
Seismic performance category	C1[1]	-[1]		-[1]		-[1]		-[1]	
	C2[1]								
Use conditions	I1 dry or wet concrete	all sizes		all sizes		all sizes		all sizes	
	I2 water filled hole [2]	all sizes		all sizes		all sizes		all sizes	
Installation direction		D3 (downward and horizontal and upwards (e.g. overhead) installation)							
Installation temperature		$T_{i,min}$ = -10 °C to $T_{i,max}$ = +40 °C for the standard variation of temperature after installation							
In-service temperature	Temperature range I	-40 °C to +40 °C	(max. short term temperature +40 °C; max. long term temperature +24 °C)						
	Temperature range II	-40 °C to +80 °C	(max. short term temperature +80 °C; max. long term temperature +50 °C)						
	Temperature range III	-40 °C to +120 °C	(max. short term temperature +120 °C; max. long term temperature +72 °C)						

[1] No performance assessed
[2] No performance assessed for installation with hollow drill bit in cracked concrete or water filled hole

Specifications of intended use (part 2)

Base materials:

- Compacted reinforced or unreinforced normal weight concrete without fibres of strength classes C20/25 to C50/60 according to EN 206:2013+A1:2016

Use conditions (Environmental conditions):

- Structures subject to dry internal conditions
  (zinc plated steel, stainless steel or high corrosion resistant steel).
- For all other conditions according to EN 1993-1-4:2015 corresponding to corrosion resistance classes to Annex A 6 table A6.1.

Design:

- Anchorages have to be designed by a responsible engineer with experience of concrete anchor design.
- Verifiable calculation notes and drawings are to be prepared taking account of the loads to be anchored. The position of the anchor is indicated on the design drawings (e. g. position of the anchor relative to reinforcement or to supports, etc.).
- Anchorages are designed in accordance with:
  EN 1992-4:2018 and EOTA Technical Report TR 055, Edition February 2018.

Installation:

- Anchor installation is to be carried out by appropriately qualified personnel and under the supervision of the person responsible for technical matters of the site
- In case of aborted hole: The hole shall be filled with mortar
- Anchorage depth should be marked and adhered to installation
- Overhead installation is allowed (necessary equipment see installation instruction)

Table B3.1: Installation parameters for **anchor rods**

Anchor rods		Thread	M8	M10	M12	M16	M20	M24
Width across flats	SW	[mm]	13	17	19	24	30	36
Nominal drill hole diameter	d_0	[mm]	10	12	14	18	22	28
Drill hole depth	h_0	[mm]	$h_0 = h_{ef}$					
Effective embedment depth	$h_{ef,\,min}$	[mm]	60	60	70	80	90	96
	$h_{ef,\,max}$	[mm]	160	200	240	320	400	480
Minimum spacing and minimum edge distance	s_{min} = c_{min}	[mm]	40	45	55	65	85	105
Diameter of the clearance hole of the fixture – pre-positioned installation	d_f	[mm]	9	12	14	18	22	26
Diameter of the clearance hole of the fixture – push through installation	d_f	[mm]	12	14	16	20	24	30
Minimum thickness of concrete member	h_{min}	[mm]	h_{ef} + 30 (≥100)			$h_{ef} + 2d_0$		
Maximum installation torque	max T_{inst}	[Nm]	10	20	40	60	120	150

fischer anchor rod

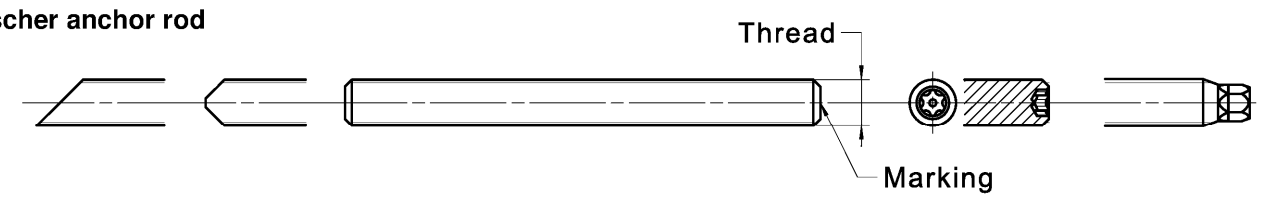

Marking (on random place) fischer anchor rod:

Steel zinc plated PC[1] 8.8	• or +	Steel hot-dip PC[1] 8.8	•
High corrosion resistant steel HCR PC[1] 50	•	High corrosion resistant steel HCR PC[1] 70	-
High corrosion resistant steel HCR PC[1] 80	(	Stainless steel R property class 50	~
Stainless steel R property class 80	∗		

Alternatively: Colour coding according to DIN 976-1: 2016

[1] PC = property class

Installation conditions:

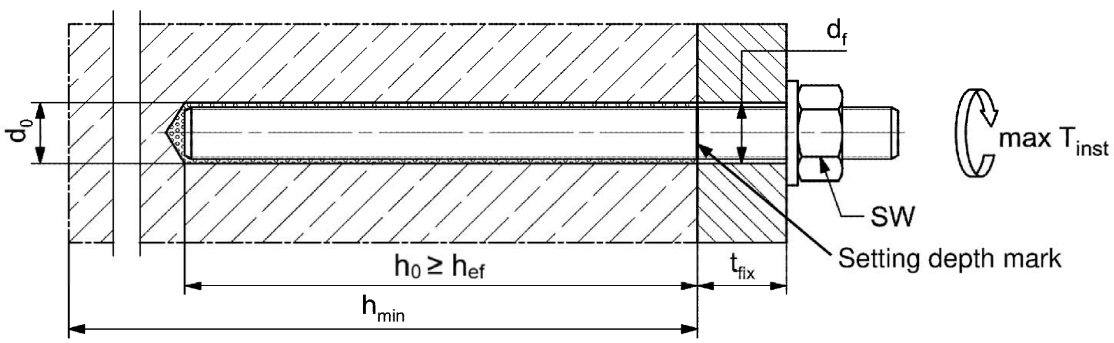

Commercial standard threaded rods, washers and hexagon nuts may also be used, if the following requirements are fulfilled:

- Materials, dimensions and mechanical properties according to Annex A 6, Table A6.1
- Inspection certificate 3.1 according to EN 10204:2004, the documents have to be stored
- Setting depth is marked

Figures not to scale

Table B4.1: Installation parameters for **fischer internal threaded anchors RG M I**

Internal threaded anchors RG M I		**Thread**	**M8**	**M10**	**M12**	**M16**
Diameter of anchor	$d_{nom} = d_H$		12	16	18	22
Nominal drill hole diameter	d_0		14	18	20	24
Drill hole depth	h_0		$h_0 = h_{ef} = L_H$			
Effective embedment depth ($h_{ef} = L_H$)	h_{ef}		90	90	125	160
Minimum spacing and minimum edge distance	s_{min} = c_{min}	[mm]	55	65	75	95
Diameter of clearance hole in the fixture	d_f		9	12	14	18
Minimum thickness of concrete member	h_{min}		120	125	165	205
Maximum screw-in depth	$l_{E,max}$		18	23	26	35
Minimum screw-in depth	$l_{E,min}$		8	10	12	16
Maximum installation torque	max T_{inst}	[Nm]	10	20	40	80

fischer internal threaded anchor RG M I

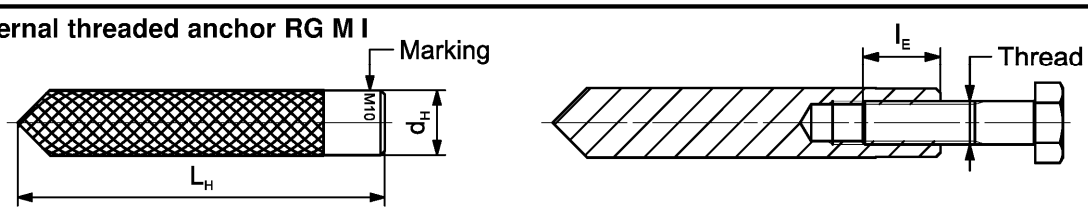

Marking: Anchor size e. g.: **M10**
Stainless steel → additional **R**; e.g.: **M10 R**
High corrosion resistant steel → additional **HCR**; e.g.: **M10 HCR**

Retaining bolt or threaded rods (including nut and washer) must comply with the appropriate material and strength class of Annex A 6, Table A6.1

Installation conditions:

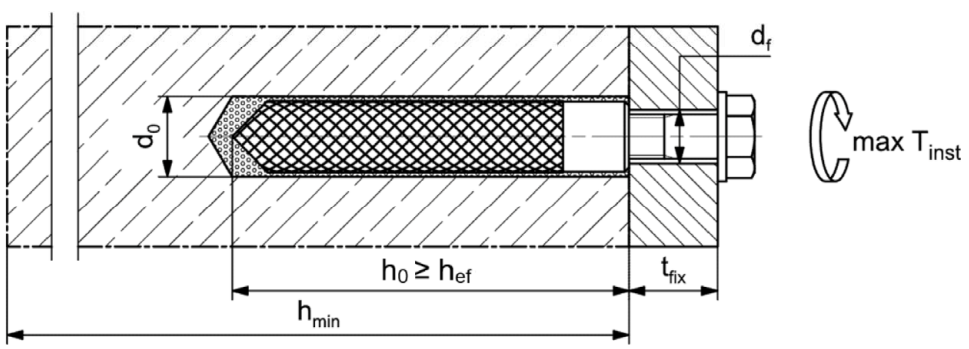

Figures not to scale

Table B5.1: Installation parameters for **reinforcing bars**

Nominal diameter of the bar		**ϕ**	**8[1)]**	**10[1)]**	**12[1)]**	**14**	**16**	**20**	**22**	**24**	**25**
Nominal drill hole diameter	d_0	[mm]	10 / 12	12 / 14	14 / 16	18	20	25	28	30	30
Drill hole depth	h_0		$h_0 = h_{ef}$								
Effective embedment depth	$h_{ef,min}$		60	60	70	75	80	90	94	98	100
	$h_{ef,max}$		160	200	240	280	320	400	440	480	500
Minimum spacing and minimum edge distance	s_{min} = c_{min}		40	45	55	60	65	85	95	105	110
Minimum thickness of concrete member	h_{min}		h_{ef} + 30 (≥ 100)			$h_{ef} + 2d_0$					

[1)] Both drill hole diameters can be used

Reinforcing bar

- The minimum value of related rib area $f_{R,min}$ must fulfil the requirements of EN 1992-1-1:2004+AC:2010
- The rib height must be within the range: $0{,}05 \cdot \phi \leq h_{rib} \leq 0{,}07 \cdot \phi$
  (ϕ = Nominal diameter of the bar, h_{rib} = rib height)

Installation conditions:

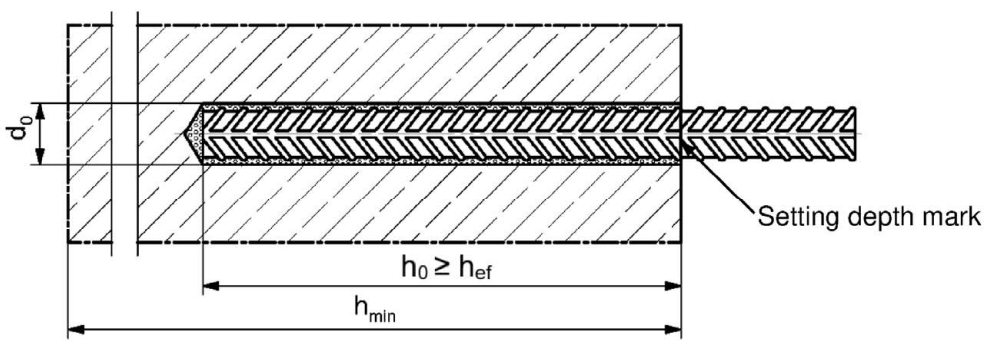

Figures not to scale

Table B6.1: Installation parameters for **fischer rebar anchor FRA**

Rebar anchor FRA		**Thread**	**M12**[1)]		**M16**	**M20**	**M24**
Nominal diameter of the bar	ϕ	[mm]	12		16	20	25
Width across flats	SW	[mm]	19		24	30	36
Nominal drill hole diameter	d_0	[mm]	14	16	20	25	30
Drill hole depth	h_0	[mm]	$h_{ef} + l_e$				
Effective embedment depth	$h_{ef,min}$	[mm]	70		80	90	96
	$h_{ef,max}$	[mm]	140		220	300	380
Distance concrete surface to welded joint	l_e	[mm]	100				
Minimum spacing and minimum edge distance	s_{min} = c_{min}	[mm]	55		65	85	105
Diameter of clearance hole in the fixture – pre-positioned anchorage	$\leq d_f$	[mm]	14		18	22	26
Diameter of clearance hole in the fixture – push through anchorage	$\leq d_f$	[mm]	18		22	26	32
Minimum thickness of concrete member	h_{min}	[mm]	$h_0 + 30$	$h_0 + 2d_0$			
Maximum installation torque	max T_{inst}	[Nm]	40		60	120	150

[1)] Both drill hole diameters can be used

fischer rebar anchor FRA

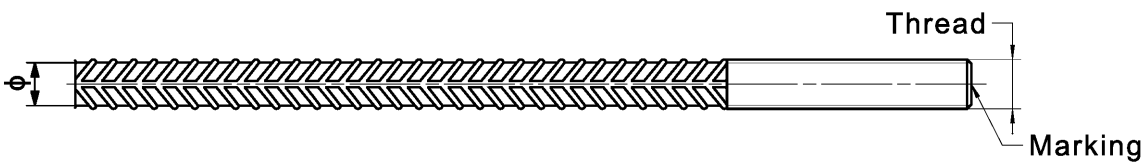

Marking frontal e.g: FRA (for stainless steel); FRA HCR (for high corrosion resistant steel)

Installation conditions:

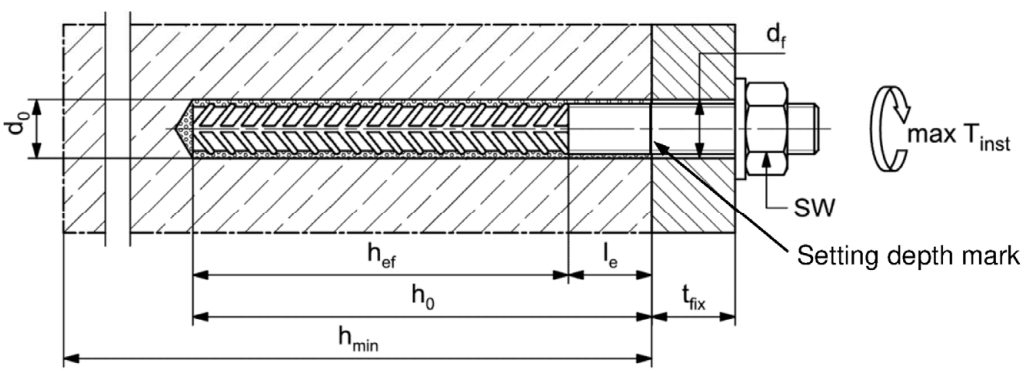

Figures not to scale

Table B7.1: Parameters of the **cleaning brush** BS (steel brush with steel bristles)

The size of the cleaning brush refers to the drill hole diameter

Nominal drill hole diameter	d_0	[mm]	10	12	14	16	18	20	22	24	25	28	30
Steel brush diameter	d_b		11	14	16	20		25		26	27	30	40

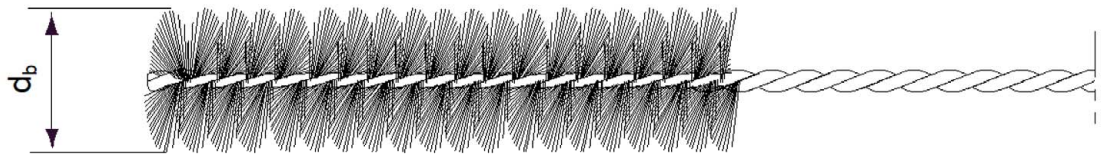

Table B7.2: Conditions for use **static mixer** without an **extension tube**

Nominal drill hole diameter	d_0	[mm]	10	12	14	16	18	20	22	24	25	28	30
Drill hole depth h_0 by using	FIS MR Plus	[mm]	≤90		≤120	≤140	≤150	≤160	≤170	≤190	≤210		
	FIS JMR		-	-	≤90	≤160	≤180	≤190	≤210	≤220		≤250	

Table B7.3 **Maximum processing** time of the mortar and **minimum curing** time (During the curing time of the mortar the concrete temperature may not fall below the listed minimum temperature)

Temperature at anchoring base [°C]	Maximum processing time t_{work}	Minimum curing time [1] t_{cure}
	FIS V Zero	FIS V Zero
-10 to -5 [2]	6 h	72 h
> -5 to 0 [2]	2 h	24 h
> 0 to 5 [2]	45 min	12 h
> 5 to 10	20 min	6 h
> 10 to 15	8 min	3 h
> 15 to 20	5 min	2 h
> 20 to 25	3 min	1 h
> 25 to 30	2 min	45 min
> 30 to 40	1 min	30 min

[1] In wet concrete or water filled holes the curing times must be doubled
[2] Minimum cartridge temperature +5°C

Installation instructions part 1

Drilling and cleaning the hole (hammer drilling with standard drill bit)

1	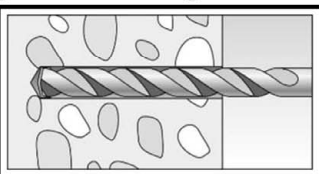	Drill the hole. Nominal drill hole diameter $\mathbf{d_0}$ and drill hole depth $\mathbf{h_0}$ see **tables B3.1, B4.1, B5.1, B6.1**		
2	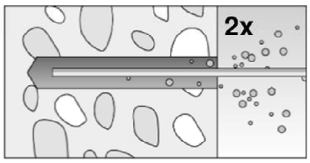	Clean the drill hole: For $h_{ef} \leq 12d$ and $d_0 < 18$ mm blow out the hole twice by hand	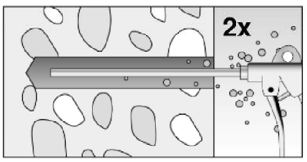	For $h_{ef} > 12d$ and / or $d_0 \geq 18$ mm blow out the hole twice with oil-free compressed air ($p \geq 6$ bar)
3	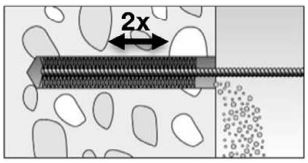	Brush the drill hole twice. For drill hole diameter $d_0 \geq 18$ mm and / or $h_{ef} > 12d$ use a power drill. For deep holes use an extension. Corresponding brushes see **table B7.1**		
4	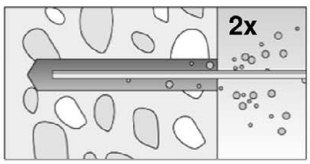	Clean the drill hole: For $h_{ef} \leq 12d$ and $d_0 < 18$ mm blow out the hole twice by hand	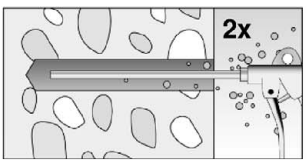	For $h_{ef} > 12d$ and / or $d_0 \geq 18$ mm blow out the hole twice with oil-free compressed air ($p \geq 6$ bar)

Go to step 5

Drilling and cleaning the hole (hammer drilling with hollow drill bit)

1		Check a suitable hollow drill (see **table B1.1**) for correct operation of the dust extraction
2	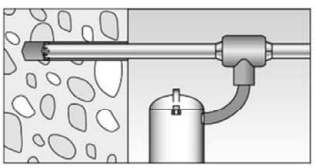	Use a suitable dust extraction system, e.g. fischer FVC 35 M or a comparable dust extraction system with equivalent performance data Drill the hole with hollow drill bit. The dust extraction system has to extract the drill dust nonstop during the drilling process and must be adjusted to maximum power. Nominal drill hole diameter $\mathbf{d_0}$ and drill hole depth $\mathbf{h_0}$ see **tables B3.1, B4.1, B5.1, B6.1**

Go to step 5

Installation instructions part 2

Preparing the cartridge

5	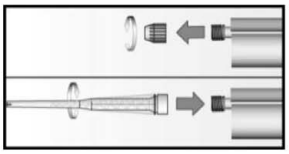	Remove the sealing cap Screw on the static mixer (the spiral in the static mixer must be clearly visible)
6	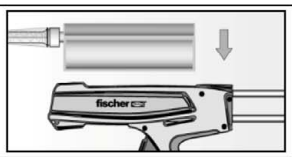 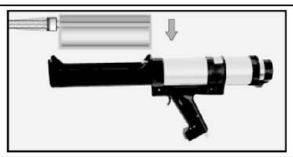	Place the cartridge into the dispenser
7	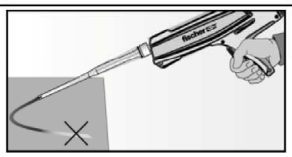 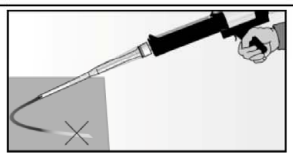	Extrude approximately 10 cm of material out until the resin is evenly grey in colour. Do not use mortar that is not uniformly grey

Go to step 8

Injection of the mortar

8	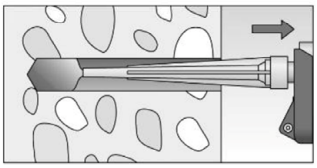 Fill approximately 2/3 of the drill hole with mortar. Always begin from the bottom of the hole and avoid bubbles	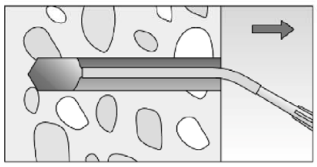 The conditions for mortar injection without extension tube can be found in **table B7.2** For deeper drill holes, than those mentioned in **table B7.2,** use a suitable extension tube	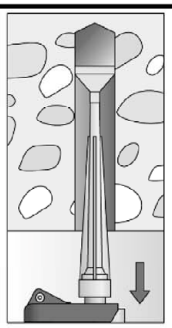 For overhead installation, deep holes (h_0 > 250 mm) or drill hole diameter (d_0 = 30 mm) use an injection adapter

Go to step 9

Installation instructions part 3

Installation of anchor rods or fischer internal threaded anchors RG M I

9

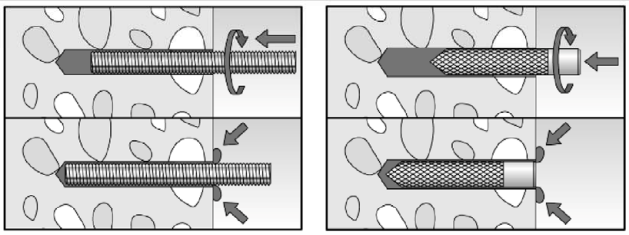

Only use clean and oil-free metal parts.
Mark the setting depth of the metal part. Push the anchor rod or fischer internal threaded RG M I anchor down to the bottom of the hole, turning it slightly while doing so.
After inserting the metal parts, excess mortar must be emerged around the anchor element.

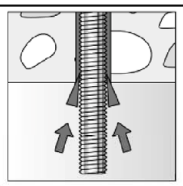

For overhead installations support the metal part with wedges (e.g. fischer centering wedges) or fischer overhead clips.

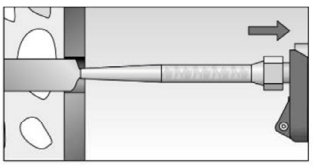

For push through installation fill the annular gap with mortar

10

Wait for the specified curing time t_{cure}
see **table B7.3**

11

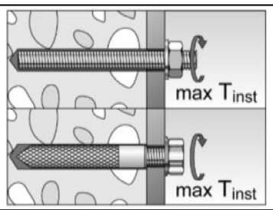

Mounting the fixture
max T_{inst} see **tables B3.1 and B4.1**

Option

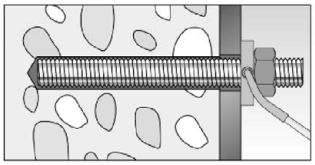

After the minimum curing time is reached, the gap between metal part and fixture (annular clearance) may be filled with mortar via the fischer filling disc.
Compressive strength ≥ 50 N/mm² (e.g. fischer injection mortars FIS V Zero, FIS HB, FIS SB, FIS V, FIS V Plus, FIS EM Plus).
ATTENTION: Using fischer filling disc reduces t_{fix} (usable length of the anchor)

Installation reinforcing bars and fischer rebar anchor FRA

9

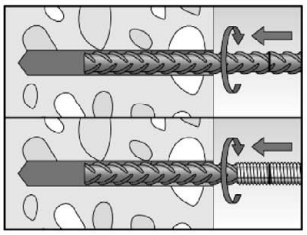

Only use clean and oil-free reinforcing bars or fischer rebar anchor FRA. Mark the setting depth. Push the reinforcement bar or the fischer rebar anchor FRA into the filled hole up to the setting depth mark.
Recommendation:
Rotation back and forth of the reinforcement bar or the fischer rebar anchor FRA makes pushing easy

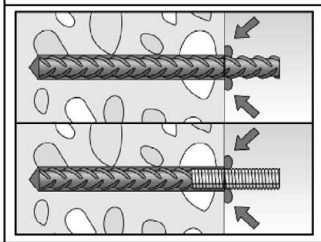

When the setting depth mark is reached, excess mortar must be emerged from the mouth of the drill hole.

10

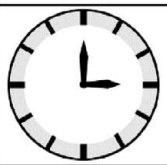

Wait for the specified curing time t_{cure} see **table B7.3**

11

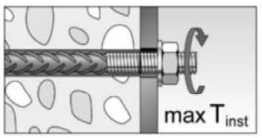

Mounting the fixture
max T_{inst}
see **table B6.1**

Table C1.1: Characteristic values **for steel failure** under **tension** / **shear load** of **fischer anchor rods** and **standard threaded rods**

Anchor rod / standard threaded rod				M8	M10	M12	M16	M20	M24
Bearing capacity under tension load, steel failure [3]									
Characteristic resistance $N_{Rk,s}$	Steel zinc plated	Property class 4.8	[kN]	15(13)	23(21)	33	63	98	141
		5.8		19(17)	29(27)	43	79	123	177
		8.8		29(27)	47(43)	68	126	196	282
	Stainless steel R and high corrosion resistant steel HCR	50		19	29	43	79	123	177
		70		26	41	59	110	172	247
		80		30	47	68	126	196	282
Partial factors [1]									
Partial factor $\gamma_{Ms,N}$	Steel zinc plated	Property class 4.8	[-]	1,50					
		5.8		1,50					
		8.8		1,50					
	Stainless steel R and high corrosion resistant steel HCR	50		2,86					
		70		1,50[2] / 1,87					
		80		1,60					
Bearing capacity under shear load, steel failure [3]									
without lever arm									
Characteristic resistance $V^0_{Rk,s}$	Steel zinc plated	Property class 4.8	[kN]	9(8)	14(13)	20	38	59	85
		5.8		11(10)	17(16)	25	47	74	106
		8.8		15(13)	23(21)	34	63	98	141
	Stainless steel R and high corrosion resistant steel HCR	50		9	15	21	39	61	89
		70		13	20	30	55	86	124
		80		15	23	34	63	98	141
Ductility factor		k_7	[-]	1,0					
with lever arm									
Characteristic resistance $M^0_{Rk,s}$	Steel zinc plated	Property class 4.8	[Nm]	15(13)	30(27)	52	133	259	448
		5.8		19(16)	37(33)	65	166	324	560
		8.8		30(26)	60(53)	105	266	519	896
	Stainless steel R and high corrosion resistant steel HCR	50		19	37	65	166	324	560
		70		26	52	92	232	454	784
		80		30	60	105	266	519	896
Partial factors [1]									
Partial factor $\gamma_{Ms,V}$	Steel zinc plated	Property class 4.8	[-]	1,25					
		5.8		1,25					
		8.8		1,25					
	Stainless steel R and high corrosion resistant steel HCR	50		2,38					
		70		1,25[2] / 1,56					
		80		1,33					

[1] In absence of other national regulations
[2] Only admissible for high corrosion resist. steel HCR, with f_{yk} / f_{uk} ≥ 0,8 and A_5 > 12 % (e.g. fischer anchor rods)
[3] Values in brackets are valid for undersized threaded rods with smaller stress area A_s for hot dip galvanised standard threaded rods according to EN ISO 10684:2004+AC:2009

Table C2.1: Characteristic values **for steel failure** under **tension** / **shear load** of **fischer internal threaded anchors RG M I**

fischer internal threaded anchors RG M I					M8	M10	M12	M16
Bearing capacity under tension load, steel failure								
Charact. resistance with screw	$N_{Rk,s}$	Property class	5.8	[kN]	19	29	43	79
			8.8		29	47	68	108
		Property class 70	R		26	41	59	110
			HCR		26	41	59	110
Partial factors[1)]								
Partial factors	$\gamma_{Ms,N}$	Property class	5.8	[-]	1,50			
			8.8		1,50			
		Property class 70	R		1,87			
			HCR		1,87			
Bearing capacity under shear load, steel failure								
Without lever arm								
Charact. resistance with screw	$V^0_{Rk,s}$	Property class	5.8	[kN]	9,2	14,5	21,1	39,2
			8.8		14,6	23,2	33,7	54,0
		Property class 70	R		12,8	20,3	29,5	54,8
			HCR		12,8	20,3	29,5	54,8
Ductility factor			k_7	[-]	1,0			
With lever arm								
Charact. resistance with screw	$M^0_{Rk,s}$	Property class	5.8	[Nm]	20	39	68	173
			8.8		30	60	105	266
		Property class 70	R		26	52	92	232
			HCR		26	52	92	232
Partial factors[1)]								
Partial factors	$\gamma_{Ms,V}$	Property class	5.8	[-]	1,25			
			8.8		1,25			
		Property class 70	R		1,56			
			HCR		1,56			

[1)] In absence of other national regulations

Table C3.1: Characteristic values **for steel failure** under tension / shear load of **reinforcing bars**

Nominal diameter of the bar		**ϕ**	**8**	**10**	**12**	**14**	**16**	**20**	**22**	**24**	**25**
Bearing capacity under tension load, steel failure											
Characteristic resistance	$N_{Rk,s}$	[kN]	$A_s \cdot f_{uk}$ 2)								
Bearing capacity under shear load, steel failure											
Without lever arm											
Characteristic resistance	$V^0_{Rk,s}$	[kN]	k_6 1) $\cdot A_s \cdot f_{uk}$ 2)								
Ductility factor	k_7	[-]	1,0								
With lever arm											
Characteristic resistance	$M^0_{Rk,s}$	[Nm]	$1{,}2 \cdot W_{el} \cdot f_{uk}$ 2)								

1) In accordance with EN 1992-4:2018 section 7.2.2.3.1
k_6 =0,6 for fasteners made of carbon steel with $f_{uk} \leq 500$ N/mm²
=0,5 for fasteners made of carbon steel with $500 < f_{uk} \leq 1000$ N/mm²
=0,5 for fasteners made of stainless steel

2) f_{uk} or f_{yk} respectively must be taken from the specifications of the reinforcing bar

Table C3.2: Characteristic values **for steel failure** under tension / shear load of **fischer rebar anchors FRA**

fischer rebar anchor FRA			**M12**	**M16**	**M20**	**M24**
Bearing capacity under tension load, steel failure						
Characteristic resistance	$N_{Rk,s}$	[kN]	59	110	172	270
Partial factor 1)						
Partial factor	$\gamma_{Ms,N}$	[-]	1,4			
Bearing capacity under shear load, steel failure						
Without lever arm						
Characteristic resistance	$V^0_{Rk,s}$	[kN]	30	55	86	141
Ductility factor	k_7	[-]	1,0			
With lever arm						
Characteristic resistance	$M^0_{Rk,s}$	[Nm]	92	233	454	898
Partial factor 1)						
Partial factor	$\gamma_{Ms,V}$	[-]	1,56			

1) In absence of other national regulations

Table C4.1: Characteristic values for **concrete failure** under **tension / shear load**

Size				**All sizes**								
Tension load												
Installation factor		γ_{inst}	[-]	See annex C 5 to C 8								
Factors for the compressive strength of concrete > C20/25												
Increasing factor for τ_{Rk}	C25/30	Ψ_c	[-]	1,03								
	C30/37			1,06								
	C35/45			1,09								
	C40/50			1,11								
	C45/55			1,13								
	C50/60			1,15								
Splitting failure												
Edge distance	$h / h_{ef} \geq 2{,}0$	$c_{cr,sp}$	[mm]	$1{,}0\ h_{ef}$								
	$2{,}0 > h / h_{ef} > 1{,}3$			$4{,}6\ h_{ef} - 1{,}8\ h$								
	$h / h_{ef} \leq 1{,}3$			$2{,}26\ h_{ef}$								
Spacing		$s_{cr,sp}$		$2\ c_{cr,sp}$								
Concrete cone failure												
Uncracked concrete		$k_{ucr,N}$	[-]	11,0								
Cracked concrete		$k_{cr,N}$		7,7								
Edge distance		$c_{cr,N}$	[mm]	$1{,}5\ h_{ef}$								
Spacing		$s_{cr,N}$		$2\ c_{cr,N}$								
Factors for sustained tension load												
Temperature range			[-]	24 °C / 40 °C		50 °C / 80 °C		72 °C / 120 °C				
Factor		Ψ^0_{sus}	[-]	0,67		0,67		0,75				
Shear load												
Installation factor		γ_{inst}	[-]	1,0								
Concrete pry-out failure												
Factor for pry-out failure		k_8	[-]	2,0								
Concrete edge failure												
Effective length of fastener in shear loading		l_f	[mm]	for $d_{nom} \leq 24$ mm: min (h_{ef}; 12 d_{nom}) for $d_{nom} > 24$ mm: min (h_{ef}; 8 d_{nom}; 300 mm)								
Calculation diameters												
Size				M8	M10	M12	M16	M20	M24			
fischer anchor rods and standard threaded rods		d_{nom}	[mm]	8	10	12	16	20	24			
fischer internal threaded anchors RG M I		d_{nom}		12	16	18	22	-[1]	-[1]			
fischer rebar anchor FRA		d_{nom}		-[1]	-[1]	12	16	20	25			
Size (nominal diameter of the bar)			ϕ	8	10	12	14	16	20	22	24	25
Reinforcing bar		d_{nom}	[mm]	8	10	12	14	16	20	22	24	25

[1] Anchor type not part of the assessment

fischer injection system FIS V Zero

Performances
Characteristic values for concrete failure under tension / shear load

Annex C 4

Table C5.1: Characteristic values for **combined pull-out** and **concrete failure** for **fischer anchor rods** and **standard threaded rods** in hammer drilled holes; **uncracked or cracked concrete**

Anchor rod / standard threaded rod				**M8**	**M10**	**M12**	**M16**	**M20**	**M24**
Combined pullout and concrete cone failure									
Calculation diameter		d	[mm]	8	10	12	16	20	24
Uncracked concrete									
Characteristic bond resistance in uncracked concrete C20/25									
Hammer-drilling with standard drill bit (dry or wet concrete, water filled hole)									
Temperature range	I: 24 °C / 40 °C	$\tau_{Rk,ucr}$	[N/mm²]	10	10	10	10	9,5	8,5
	II: 50 °C / 80 °C			10	10	10	10	9,5	8,5
	III: 72 °C / 120 °C			8	8	8	8	8	7
Hammer-drilling with hollow drill bit (dry or wet concrete)									
Temperature range	I: 24 °C / 40 °C	$\tau_{Rk,ucr}$	[N/mm²]	-[1)]	6,5	6	6	6	5
	II: 50 °C / 80 °C			-[1)]	6,5	6	6	6	5
	III: 72 °C / 120 °C			-[1)]	5,5	5	5	5	4,5
Installation factors									
Dry or wet concrete and water filled hole		γ_{inst}	[-]	1,4					
Cracked concrete									
Characteristic bond resistance in cracked concrete C20/25									
Hammer-drilling with standard drill bit (dry or wet concrete, water filled hole)									
Temperature range	I: 24 °C / 40 °C	$\tau_{Rk,cr}$	[N/mm²]	4	4	4	4	4	4
	II: 50 °C / 80 °C			4	4	4	4	4	4
	III: 72 °C / 120 °C			3	3	3,5	3,5	3,5	3,5
Installation factors									
Dry or wet concrete and water filled hole		γ_{inst}	[-]	1,4					

[1)] No performance assessed

Table C6.1: Characteristic values for **combined pull-out** and **concrete failure** for **fischer internal threaded anchors RG M I** in hammer drilled holes; **uncracked** or **cracked concrete**

Internal threaded anchor RG M I				**M8**	**M10**	**M12**	**M16**
Combined pullout and concrete cone failure							
Calculation diameter		d	[mm]	12	16	18	22
Uncracked concrete							
Characteristic bond resistance in uncracked concrete C20/25							
Hammer-drilling with standard drill bit (dry or wet concrete, water filled hole)							
Temperature range	I: 24 °C / 40 °C	$\tau_{Rk,ucr}$	[N/mm²]	7,5	7,5	7,5	7
	II: 50 °C / 80 °C			7,5	7,5	7,5	7
	III: 72 °C / 120 °C			6,5	6,5	6,5	6
Hammer-drilling with hollow drill bit (dry or wet concrete)							
Temperature range	I: 24 °C / 40 °C	$\tau_{Rk,ucr}$	[N/mm²]	6,5	6,5	6,5	6,5
	II: 50 °C / 80 °C			6,5	6,5	6,5	6,5
	III: 72 °C / 120 °C			5,5	5,5	5,5	5,5
Installation factors							
Dry or wet concrete and water filled hole		γ_{inst}	[-]	1,4			
Cracked concrete							
Characteristic bond resistance in cracked concrete C20/25							
Hammer-drilling with standard drill bit (dry or wet concrete, water filled hole)							
Temperature range	I: 24 °C / 40 °C	$\tau_{Rk,cr}$	[N/mm²]	4,5	4	4	3,5
	II: 50 °C / 80 °C			4,5	4	4	3,5
	III: 72 °C / 120 °C			3,5	3,5	3	3
Installation factors							
Dry or wet concrete and water filled hole		γ_{inst}	[-]	1,4			

Table C7.1: Characteristic values for **combined pull-out** and **concrete failure** for **reinforcing bars** in hammer drilled holes; **uncracked concrete**

Nominal diameter of the bar		**ϕ**	**8**	**10**	**12**	**14**	**16**	**20**	**22**	**24**	**25**
Combined pullout and concrete cone failure											
Calculation diameter	d	[mm]	8	10	12	14	16	20	22	24	25
Uncracked concrete											
Characteristic bond resistance in uncracked concrete C20/25											
Hammer-drilling with standard drill bit (dry or wet concrete, water filled hole)											
Temperature range I: 24 °C / 40 °C	$\tau_{Rk,ucr}$	[N/mm²]	6,5	7	7	7,5	7,5	8	8	8	8
Temperature range II: 50 °C / 80 °C	$\tau_{Rk,ucr}$	[N/mm²]	6,5	7	7	7,5	7,5	8	8	8	8
Temperature range III: 72 °C / 120 °C	$\tau_{Rk,ucr}$	[N/mm²]	5,5	5,5	6	6	6,5	6,5	6,5	6,5	6,5
Hammer-drilling with hollow drill bit (dry or wet concrete)											
Temperature range I: 24 °C / 40 °C	$\tau_{Rk,ucr}$	[N/mm²]	6	6	6	6	6	6	5,5	5,5	5,5
Temperature range II: 50 °C / 80 °C	$\tau_{Rk,ucr}$	[N/mm²]	6	6	6	6	6	6	5,5	5,5	5,5
Temperature range III: 72 °C / 120 °C	$\tau_{Rk,ucr}$	[N/mm²]	5	5	5	5	5	5	4,5	4,5	4,5
Installation factors											
Dry or wet concrete and water filled hole	γ_{inst}	[-]	1,4								

Table C7.2: Characteristic values for **combined pull-out** and **concrete failure** for **fischer rebar anchors FRA** in hammer drilled holes; **uncracked concrete**

fischer rebar anchors FRA			**M12**	**M16**	**M20**	**M24**
Combined pullout and concrete cone failure						
Calculation diameter	d	[mm]	12	16	20	25
Uncracked concrete						
Characteristic bond resistance in uncracked concrete C20/25						
Hammer-drilling with standard drill bit (dry or wet concrete, water filled hole)						
Temperature range I: 24 °C / 40 °C	$\tau_{Rk,ucr}$	[N/mm²]	7	7,5	8	8
Temperature range II: 50 °C / 80 °C	$\tau_{Rk,ucr}$	[N/mm²]	7	7,5	8	8
Temperature range III: 72 °C / 120 °C	$\tau_{Rk,ucr}$	[N/mm²]	6	6,5	6,5	6,5
Hammer-drilling with hollow drill bit (dry or wet concrete)						
Temperature range I: 24 °C / 40 °C	$\tau_{Rk,ucr}$	[N/mm²]	6	6	6	5,5
Temperature range II: 50 °C / 80 °C	$\tau_{Rk,ucr}$	[N/mm²]	6	6	6	5,5
Temperature range III: 72 °C / 120 °C	$\tau_{Rk,ucr}$	[N/mm²]	5	5	5	4,5
Installation factors						
Dry or wet concrete and water filled hole	γ_{inst}	[-]	1,4			

Table C8.1: Displacements for anchor rods

Anchor rod		M8	M10	M12	M16	M20	M24
Displacement-Factors for tension load[1)]							
Uncracked concrete; Temperature range I, II, III							
$\delta_{N0\text{-Factor}}$	[mm/(N/mm²)]	0,04	0,04	0,05	0,06	0,07	0,08
$\delta_{N\infty\text{-Factor}}$		0,04	0,04	0,05	0,06	0,07	0,08
Cracked concrete; Temperature range I, II, III							
$\delta_{N0\text{-Factor}}$	[mm/(N/mm²)]	0,10	0,11	0,11	0,13	0,14	0,16
$\delta_{N\infty\text{-Factor}}$		0,10	0,11	0,11	0,13	0,14	0,16
Displacement-Factors for shear load[2)]							
Uncracked or cracked concrete; Temperature range I, II, III							
$\delta_{V0\text{-Factor}}$	[mm/kN]	0,18	0,15	0,12	0,09	0,07	0,06
$\delta_{V\infty\text{-Factor}}$		0,27	0,22	0,18	0,14	0,11	0,09

1) Calculation of effective displacement:

$\delta_{N0} = \delta_{N0\text{-Factor}} \cdot \tau_{Ed}$

$\delta_{N\infty} = \delta_{N\infty\text{-Factor}} \cdot \tau_{Ed}$

(τ_{Ed}: Design value of the applied tensile bond stress)

2) Calculation of effective displacement:

$\delta_{V0} = \delta_{V0\text{-Factor}} \cdot V_{Ed}$

$\delta_{V\infty} = \delta_{V\infty\text{-Factor}} \cdot V_{Ed}$

(V_{Ed}: Design value of the applied shear force)

Table C8.2: Displacements for fischer internal threaded anchors RG M I

Internal threaded anchor RG M I		M8	M10	M12	M16
Displacement-Factors for tension load[1)]					
Uncracked concrete; Temperature range I, II, III					
$\delta_{N0\text{-Factor}}$	[mm/(N/mm²)]	0,06	0,07	0,07	0,07
$\delta_{N\infty\text{-Factor}}$		0,06	0,07	0,07	0,07
Cracked concrete; Temperature range I, II, III					
$\delta_{N0\text{-Factor}}$	[mm/(N/mm²)]	0,10	0,11	0,11	0,12
$\delta_{N\infty\text{-Factor}}$		0,10	0,11	0,11	0,12
Displacement-Factors for shear load[2)]					
Uncracked or cracked concrete; Temperature range I, II, III					
$\delta_{V0\text{-Factor}}$	[mm/kN]	0,12	0,09	0,08	0,07
$\delta_{V\infty\text{-Factor}}$		0,18	0,14	0,12	0,10

1) Calculation of effective displacement:

$\delta_{N0} = \delta_{N0\text{-Factor}} \cdot \tau_{Ed}$

$\delta_{N\infty} = \delta_{N\infty\text{-Factor}} \cdot \tau_{Ed}$

(τ_{Ed}: Design value of the applied tensile bond stress)

2) Calculation of effective displacement:

$\delta_{V0} = \delta_{V0\text{-Factor}} \cdot V_{Ed}$

$\delta_{V\infty} = \delta_{V\infty\text{-Factor}} \cdot V_{Ed}$

(V_{Ed}: Design value of the applied shear force)

Table C9.1: Displacements for reinforcing bars

Nominal diameter of the bar	ϕ	8	10	12	14	16	20	22	24	25
Displacement-Factors for tension load[1)]										
Uncracked concrete; Temperature range I, II, III										
$\delta_{N0\text{-Factor}}$	[mm/(N/mm²)]	0,05	0,06	0,07	0,08	0,09	0,10	0,11	0,12	0,12
$\delta_{N\infty\text{-Factor}}$		0,05	0,06	0,07	0,08	0,09	0,10	0,11	0,12	0,12
Displacement-Factors for shear load[2)]										
Uncracked concrete; Temperature range I, II, III										
$\delta_{V0\text{-Factor}}$	[mm/kN]	0,18	0,15	0,12	0,10	0,09	0,07	0,07	0,06	0,06
$\delta_{V\infty\text{-Factor}}$		0,27	0,22	0,18	0,16	0,14	0,11	0,10	0,09	0,09

1) Calculation of effective displacement:

$\delta_{N0} = \delta_{N0\text{-Factor}} \cdot \tau_{Ed}$

$\delta_{N\infty} = \delta_{N\infty\text{-Factor}} \cdot \tau_{Ed}$

(τ_{Ed}: Design value of the applied tensile bond stress)

2) Calculation of effective displacement:

$\delta_{V0} = \delta_{V0\text{-Factor}} \cdot V_{Ed}$

$\delta_{V\infty} = \delta_{V\infty\text{-Factor}} \cdot V_{Ed}$

(V_{Ed}: Design value of the applied shear force)

Table C9.2: Displacements for fischer rebar anchors FRA

fischer rebar anchor FRA		M12	M16	M20	M24
Displacement-Factors for tension load[1)]					
Uncracked concrete; Temperature range I, II, III					
$\delta_{N0\text{-Factor}}$	[mm/(N/mm²)]	0,07	0,09	0,10	0,12
$\delta_{N\infty\text{-Factor}}$		0,07	0,09	0,10	0,12
Displacement-Factors for shear load[2)]					
Uncracked concrete; Temperature range I, II, III					
$\delta_{V0\text{-Factor}}$	[mm/kN]	0,12	0,09	0,07	0,06
$\delta_{V\infty\text{-Factor}}$		0,18	0,14	0,11	0,09

1) Calculation of effective displacement:

$\delta_{N0} = \delta_{N0\text{-Factor}} \cdot \tau_{Ed}$

$\delta_{N\infty} = \delta_{N\infty\text{-Factor}} \cdot \tau_{Ed}$

(τ_{Ed}: Design value of the applied tensile bond stress)

2) Calculation of effective displacement:

$\delta_{V0} = \delta_{V0\text{-Factor}} \cdot V_{Ed}$

$\delta_{V\infty} = \delta_{V\infty\text{-Factor}} \cdot V_{Ed}$

(V_{Ed}: Design value of the applied shear force)