IZJAVA O SVOJSTVIMA

DoP 0254
za fischer FIF-CS-8 (Plastične tiple za korištenje u betonu i zidanim konstrukcijama) HR

1. Jedinstveni identifikator tipa proizvoda:	**DoP 0254**	
2. Namjena korištenja:	**Vijčano plastično sidro za pričvršćivanje vanjskih toplinsko izolacijskih kompozitnih sustava (ETICS) sa žbukom u betonu i zidovima, vidi dodatak, posebno priloge B1 - B3.**	
3. Proizvođač:	**fischerwerke GmbH & Co. KG, Klaus-Fischer-Str. 1, 72178 Waldachtal, Njemačka**	
4. Ovlašteni zastupnik:	**–**	
5. Sistem/i od AVCP:	**2+**	
6. Europski dokument za ocjenjivanje:	**EAD 330196-01-0604**	
Europska tehnička ocjena:	**ETA-15/0006; 2018-05-31**	
Tijelo za tehničko ocjenjivanje:	**ETA-Danmark A/S**	
Prijavljeno tijelo/prijavljena tijela:	**2873 TU Darmstadt**	
7. Objavljena svojstva:		
Sigurnost u uporabi (BWR 4)		
Karakteristična nosivost:	**Karakteristični otpor pod vlačnim opterećenjem:**	**Prilog C1**
	Minimalna rubna udaljenost:	**Prilog B2**
	Minimalni osni razmak:	**Prilog B2**
Istisnine:	**Vlačno opterećenje s djelomičnim sigurnosnim faktorom:**	**Prilog C2**
	Istisnine:	**Prilog C2**
Krutost ploče sidra:	**Promjer ploče sidra:**	**Prilog C2**
	Otpornost na opterećenje ploče sidra	**Prilog C2**
	Krutost ploče sidra:	**Prilog C2**
Ušteda energije i zadržavanje topline (BWR 6)		
Toplinska propusnost:	**Točka toplinske prolaznosti sidra:**	**Prilog C2**
	Debljina izolacijskog sloja ETICS-a:	**Prilog C2**
8. Odgovarajuća tehnička dokumentacija i/ili specifična tehnička dokumentacija:	**–**	

Svojstva gore navedenog proizvoda su u skladu sa skupom izjava o svojstvima.Ova izjava o svojstvima se izdaje, u skladu sa Europskom regulativom (EU) Br. 305/2011, pod punom odgovornošću gore navedenog proizvođača

Za proizvođača i u njegovo ime potpisao:

Dr.-Ing. Oliver Geibig, Generalni direktor poslovne jedinice i inženjering

Jürgen Grün, Glavni direktor za kemiju i kvalitetu

Tumlingen, 2021-01-15

Ovaj DoP je pripremljen u različitim jezicima. U slučaju da postoji spor u tumačenju, engleska verzija će uvijek prevladati.

U aneksu se nalaze dodatni podaci na engleskom jeziku, koji ne podliježu zakonskoj regulativi.

1 Technical description of product and intended use

Technical description of the product
The screwed-in anchor fischer FIF - CS 8 for fixing of external thermal insulation composite systems (ETICS) consists of an anchor sleeve made of polypropylene with a diameter of 8 mm and an insulation plate made of glass-fiber reinforced polyamide with a diameter of 60 mm. The color of the anchor sleeve is grey. The special compound screw is made of galvanized steel and glass-fiber reinforced polyamide. The anchor is expanded by screwing the screw into the sleeve. It is possible to install the anchor flush to the surface of the insulation.

The product description is given in Annex A.

2 Specification of the intended use in accordance with the applicable EAD

The performances given in Section 3 are only valid if the anchor is used in compliance with the specifications and conditions given in Annex B1 to B3

The provisions made in this European Technical Assessment are based on an assumed intended working life of the anchor of 25 years.

The indications given on the working life cannot be interpreted as a guarantee given by the producer or Assessment Body, but are to be regarded only as a means for choosing the right products in relation to the expected economically reasonable working life of the works.

3 Performance of the product and references to the methods used for its assessment

3.1 Characteristics of product

Mechanical resistance and stability (BWR 1):
The essential characteristics regarding mechanical resistance and stability are included under the Basic Works Requirement Safety in use.

Safety in case of fire (BWR 2):
No Performance determined

Safety in use (BWR4):
The essential characteristics are detailed in the Annex from C1 to C3.

Sustainable use of natural resources (BWR7)
No performance determined

Other Basic Requirements are not relevant.

General aspects
The verification of durability is part of testing of the essential characteristics. Durability is only ensured if the specifications of intended use according to Annex B are taken into account.

3.2 Methods of assessment

The assessment of fitness of the anchor for the intended use in relation to the requirements for mechanical resistance and stability and safety in use in the sense of the Basic Requirements 4 has been made in accordance with the EAD 330196-01-0604 Plastic anchors made of virgin or non-virgin material for fixing of external thermal insulation composite systems with rendering.

4 Assessment and verification of constancy of performance (AVCP)

4.1 AVCP system

According to the decision 97/463/EC of the European Commission, the system(s) of assessment and verification of constancy of performance (see Annex V to Regulation (EU) No 305/2011) is 2+.

FIF-CS 8 / 60-180

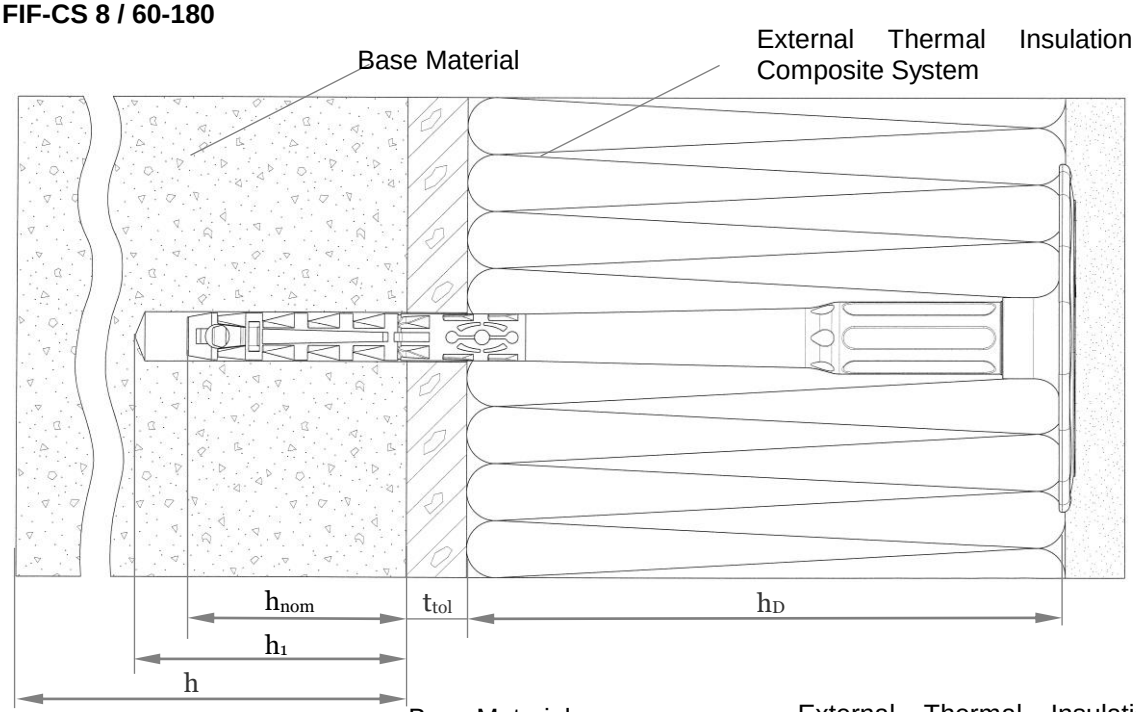

FIF-CS 8 / 200-340

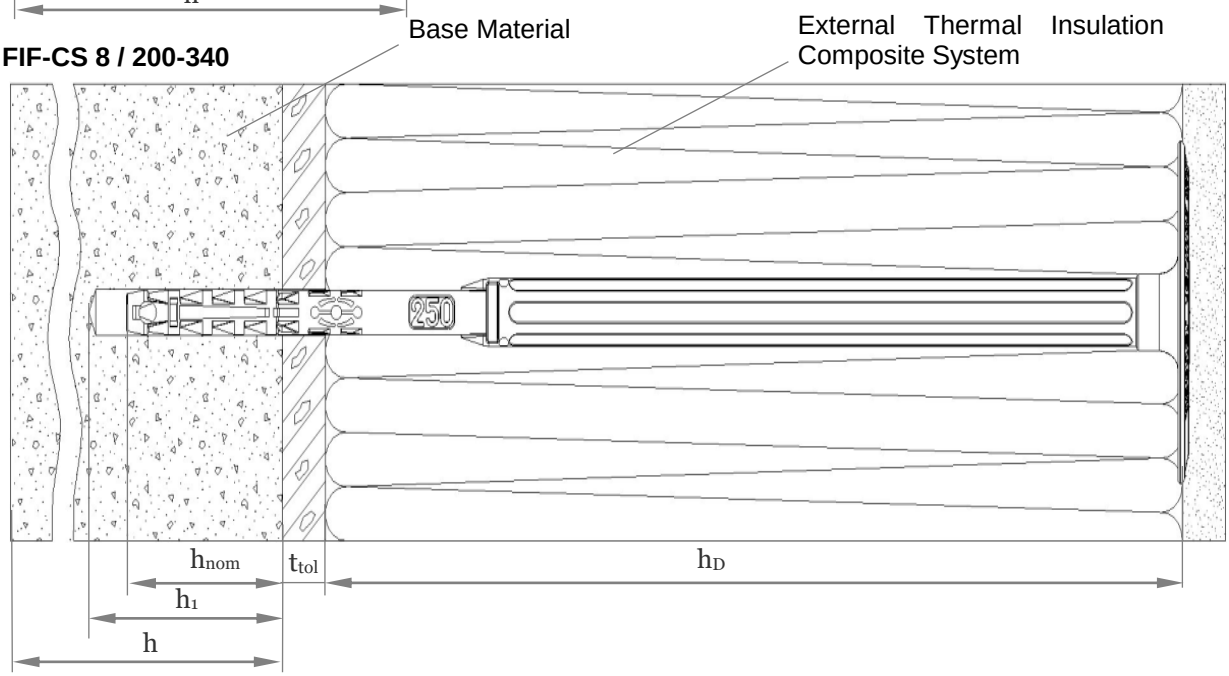

Legend

h_{nom} = Overall plastic anchor embedment depth in the base material

h_1 = Depth of drilled hole to deepest point

h = Thickness of member (wall)

h_D = Thickness of insulation material

t_{tol} = Thickness of equalizing layer or non–load bearing coating

fischer FIF-CS-8	**Annex A1**
Product description - Installed anchor	Appendix 4 / 12

Anchor sleeve / Specific screw for FIF-CS 8 / 60-180

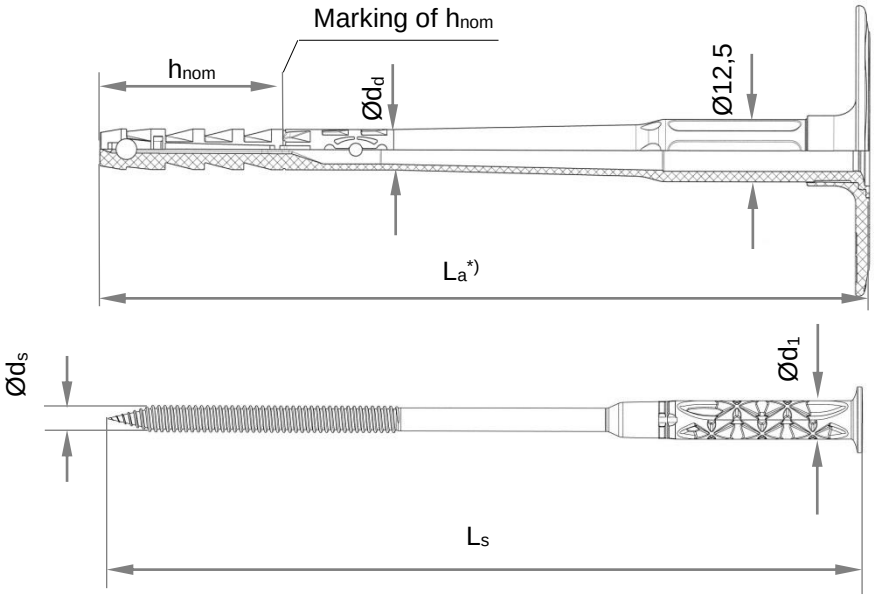

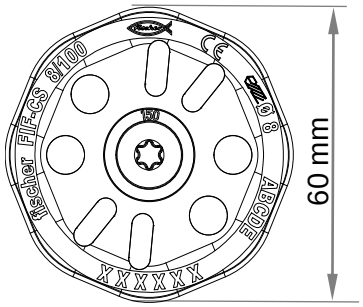

*) FIF-CS 8 / 60-180:
$110 \leq L_a \leq 230$

Thickness of insulation material:
$h_D = L_a - h_{nom} - t_{tol}$

Shaft / Anchor sleeve / Specific screw for FIF-CS 8 / 200-340

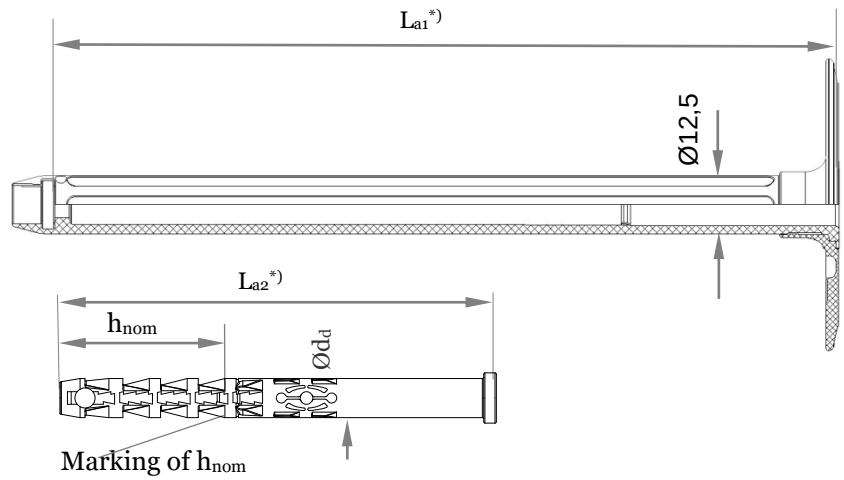

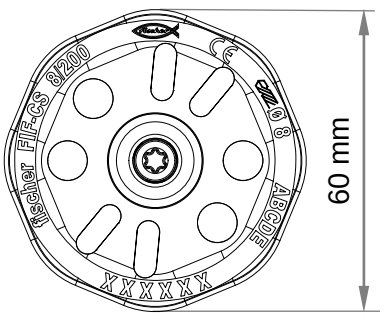

*) FIF-CS 8 / 200-340:
$250 \leq L_a \leq 390$

Thickness of insulation material: $h_D = (L_{a1} + L_{a2}) - h_{nom} - t_{tol}$

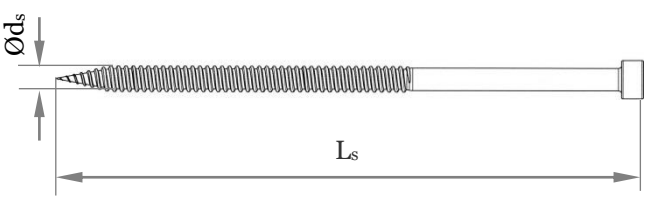

Optional: plain surface setting
Setting tool with long bit adapter or hexagonal adapter available

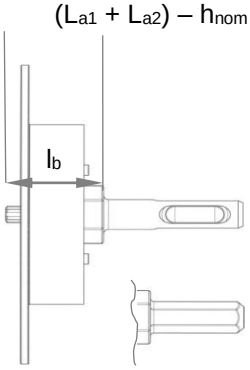

fischer FIF-CS-8	**Annex A2**
Product description - Installed anchor	Appendix 5 / 12

Table A3.1: Marking

	Designation
Name and size of anchor	FIF-CS-8
Example	**fischer FIF-CS-8 (optional) CE (optional) Ø 8 ABCDE (optional) and xxxxx additional marks possible**

Table A3.2: Dimensions [mm]

Anchor type	Anchor sleeve		Shaft		Specific screw			Length of bits l_b	
	Ø d_d	h_{nom}	L_a	(L_{a1}+L_{a2})	Ø d_s	l_s	Ø d_1	l_b [mm]	size
FIF-CS 8 / 60-180	8	35	110-230	-	5,4	L_a	8	30	T30
FIF-CS 8 / 200-340	8	35	-	250-390	5,4	(L_{a1} + L_{a2}) – 155mm	-	180	T25
FIF-CS Renovation type 8 / 200-260	8	35	-	250-310	5,4	(L_{a1} + L_{a2}) – 75mm	-	100	T25

Table A3.3: Materials

Designation	Material
Anchor sleeve	PP colour: grey
Shaft (FIF-CS-8 / 200-340)	PA6 GF colour: grey
Specific compound screw (FIF-CS-8 / 60-180) or specific screw (FIF-CS-8 / 200-340)	PA6 GF with Steel gal Zn A2G or A2F acc. to EN ISO 4042 Steel gal Zn A2G or A2F according to EN ISO 4042 or stainless steel 1.4362 duplex coating, 1.4401, 1.4571, 1.4529 acc. to EN 10088
Anchor plate	PA6 GF colour: grey

Drawing of the slip-on plates

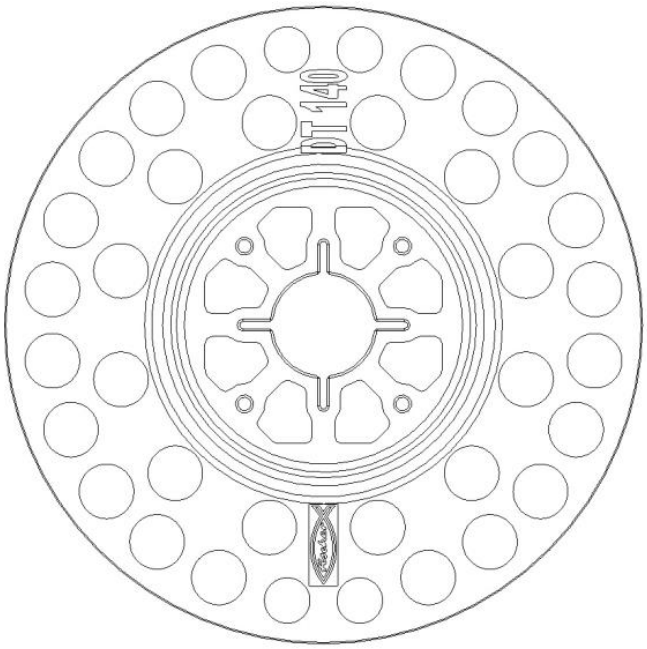

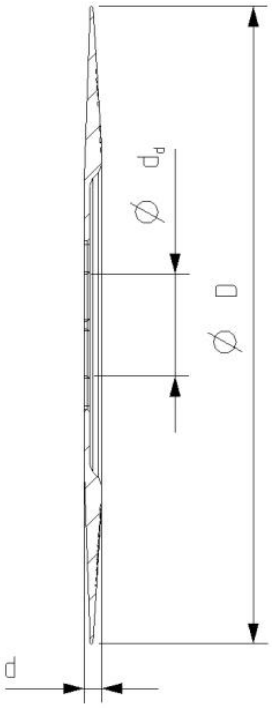

Table A4.1: Slip-on plates, diameters and material

Slip-on plate	Ø D [mm]	Ø d_d [mm]	d [mm]	Material
DT 90 / 110 / 140	90 / 110 / 140	22,5	3,9	PA 6 GF

Specifications of intended use

Anchorages subject to:

- The anchor may only be used for transmission of wind suction loads and shall not be used for the transmission of dead loads of the thermal insulation composite system.

Base materials:

- Normal weight concrete (use category A) according to Annex C1.
- Solid masonry (use category B), according to Annex C1.
- Hollow or perforated masonry (use category C), according to Annex C1.
- Hollow or perforated masonry (use category D), according to Annex C1.
- Hollow or perforated masonry (use category E), according to Annex C1.
- For other base materials of the use categories A, B, C, D or E the characteristic resistance of the anchor may be determined by job site tests according to EOTA Technical Report TR 051.

Temperature Range:

- 0°C to +40°C (max. short term temperature +40°C and max. long term temperature +24°C).

Design:

- The anchorages are designed under the responsibility of an engineer experienced in anchorages and masonry work with the partial safety factors γ_M = 2,0 and γ_F = 1,5, if there are no other national regulations.
- Verifiable calculation notes and drawings are prepared taking account of the loads to be anchored. The position of the anchors is indicated on the design drawings.
- Fasteners are only to be used for multiple fixings of ETICS.

Installation:

- Drilling method according to Annex C1.
- Anchor installation carried out by appropriately qualified personnel and under the supervision of the person responsible for technical matters on the site.
- Installation temperature from 0°C to +40°C
- Exposure to UV due to solar radiation of the anchor not protected by rendering ≤ 6 weeks

Table B2.1: Installation parameters for use categories A, B, C, D and E

Anchor type				FIF-CS-8
Nominal drill hole diameter	d_0	=	[mm]	**8**
Cutting diameter of drill bit	d_{cut}	≤	[mm]	**8,45**
Depth of drill hole to deepest point	h_1	≥	[mm]	**45**
Overall plastic anchor embedment depth in the base material	h_{nom}	≥	[mm]	**35**

Table B2.2: Installation parameters for cat. "C" only valid for tested masonry units (see Annex C1

Anchor type				FIF-CS
Nominal drill hole diameter	d_0	=	[mm]	**8**
Cutting diameter of drill bit	d_{cut}	≤	[mm]	**8,45**
Depth of drill hole to deepest point	h_1	≥	[mm]	**35**
Overall plastic anchor embedment depth in the base material	h_{nom}	≥	[mm]	**25**

Table B2.3: Anchor distances and dimensions of members

Anchor type				FIF-CS
Minimum thickness of member	$h^{1)}$	≥	[mm]	**100**
Minimum spacing	s_{min}	=	[mm]	**100**
Minimum edge distance	c_{min}	=	[mm]	**100**

1) not valid for weather shells acc. to C1

Scheme of distances and spacing

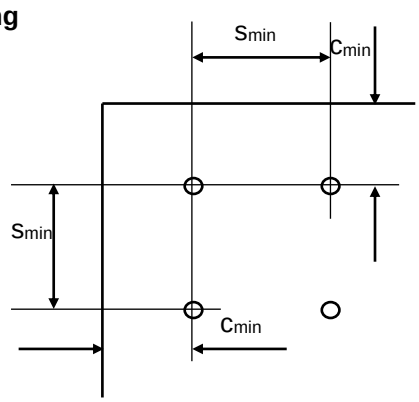

Installation instructions

Standard setting of anchor (plain surface)

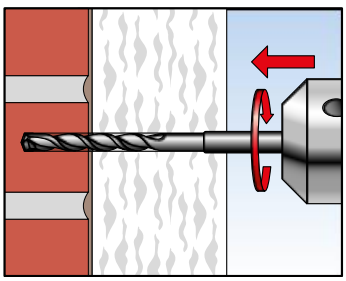

1. Drill hole by correspond-ding drilling method

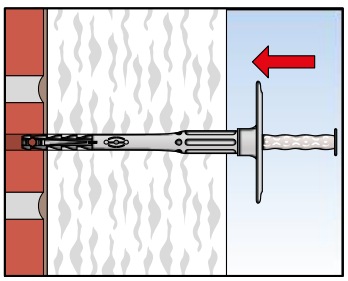

2. Insert anchor manually

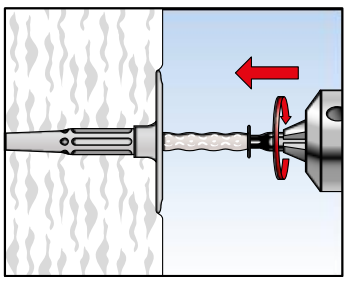

3. Set anchor by machine

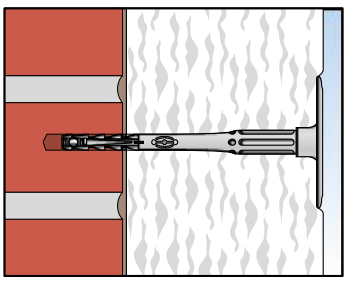

4. Correctly installed anchor

Optional:

Setting of anchor by setting tool

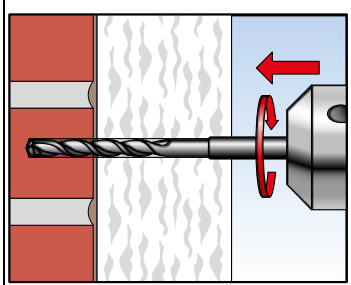

1. Drill hole by corresponding drilling method

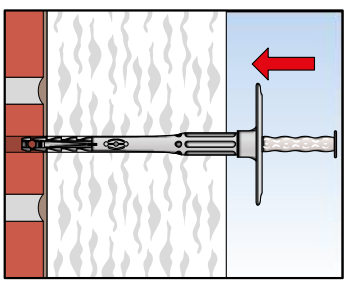

2. Insert anchor manually

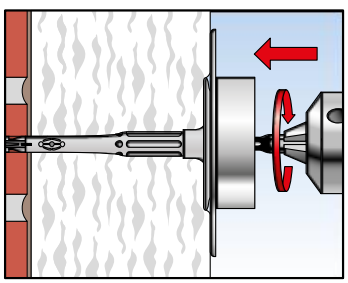

3. Set anchor by setting tool with the machine

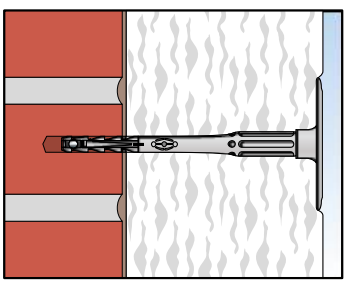

4 .Correctly installed anchor

fischer FIF-CS-8	**Annex B3**
Procedure	Appendix 10 / 12

Table C1.1: Char. resistance to tension loads NRk in concrete, masonry, LAC and AAC for a single anchor in kN

Base material	Use Cat.	Bulk density class ρ [kg/dm³]	Minimum compressive strength f_b [N/mm²]	Remarks	Drill mode[1)]	Characteristic resistance FIF CS N_{Rk} [kN]
Concrete ≥ C 12/15 - C 50/60	A	-		EN 206-1:2000	H	**1,2**
Solid Clay bricks e.g. acc. to DIN 105-100:2012-01, EN 771-1:2011, Mz	B	≥ 1,8	20	Cross section reduced up to 15% by perforation vertically to the resting area	H	**1,2**
Vertically perforated clay bricks e.g. acc. to DIN 105-100:2012-01, EN 771-1:2011, HLz	C	≥ 1,0	12	Cross section between 15% and 50% by perforation vertically to the resting area. Exterior web thickness ≥ 12 mm	R	**0,6[3)]**
Lightweight Aggregate Concrete ≥ LAC 6	D	≥ 0,9	6	DIN EN 1520	H	**0,6**
Autoclaved aerated concrete blocks, e.g. AAC acc. to DIN V 4165-100:2005-10, EN 771-4 hnom = 35mm	E	≥ 0,50	4	DIN V 4165-100	R	**0,3**
Partial safety factor					γ_M[2)]	**2,0**

1) H = Hammer drilling, R = Rotary drilling
2) In absence of other national regulations
3) Values also valid for reduced anchorage depth 25 mm (see Table B2.2)

Table C2.1: Point thermal transmittance acc. to EOTA Technical Report TR 025:2007-06

Anchor type	Thickness of insulation material h_D [mm]	Point thermal transmittance χ [W/K]
FIF-CS 8 / 60 – 180 flush mounted	60 - 80	0,001
	100 - 180	0,002
FIF-CS 8 / 200 – 340 flush mounted	200 - max.	0,001
FIF-CS 8 / 200 - 260*) flush mounted	200 - 220	0,001
	240 - 260	0,002

*) Renovation type

Table C2.2: Plate stiffness acc. to EOTA Technical Report TR 026:2007-06

Anchor type	Max. size of the anchor plate [mm]	Load resistance of the anchor plate [kN]	Plate stiffness [kN/mm]
FIF-CS-8	60	1,63	0,6

Table C4: Displacements

Base material	Tension load F_{Rd} [kN]	Displacements δ_m [mm]
Concrete ≥ C12/15 to C 50/60 (EN 206-1:2000)	0,40	< 0,3
Clay brick DIN 105-100:2012-01, EN 771-1:2011, Mz 20	0,40	< 0,3
Vertically perforated Clay brick acc. to 105-100:2012-01, EN 771-1:2011, Hlz 12	0,20	< 0,2
Lightweight Aggregate Concrete ≥ LAC 6 DIN EN 1520	0,20	< 0,2
Autoclaved aerated concrete blocks acc. to DIN V 4165-100:2005-10 EN 771-4, AAC 4, h_{nom} = 35 mm	0,10	< 0,1