IZJAVA O SVOJSTVIMA

DoP 0333

za Fischer sidreni kanal FES s Fischer vijcima FBC (Sidreni kanal za uporabu u betonu) HR

1. Jedinstveni identifikator tipa proizvoda: **DoP 0333**

2. Namjena korištenja: **Sidreni kanal za uporabu u napuknutom i nenapuknutom betonu, vidi dodatak, posebno priloge B1- B8.**

3. Proizvođač: **fischerwerke GmbH & Co. KG, Klaus-Fischer-Str. 1, 72178 Waldachtal, Njemačka**

4. Ovlašteni zastupnik: **–**

5. Sistem/i od AVCP: **1**

6. Europski dokument za ocjenjivanje: **EAD 330008-03-0601, Edition 06/2021**
   Europska tehnička ocjena: **ETA-18/0862; 2023-03-31**
   Tijelo za tehničko ocjenjivanje: **DIBt- Deutsches Institut für Bautechnik**
   Prijavljeno tijelo/prijavljena tijela: **2873 TU Darmstadt**

7. Objavljena svojstva:

Mehanička otpornost i stabilnost (BWR 1)

Karakteristični otpor na opterećenje (statičko i kvazi-statičko opterećenje):

1) Otpornost sidra na lom čelika: Priloge C1
2) Otpornost na lom čelika spoja sidra i kanala: Priloge C1
3) Otpornost na otkazivanje čeličnih rubova kanala i naknadno izvlačenje vijka kanala: Priloge C1
4) Otpornost na lom čelika vijka kanala: Priloge C10
5) Otpornost na lom čelika prekoračenjem čvrstoće na savijanje kanala: Priloge A5, C2
6) Najveći zakretni moment ugradnje kako bi se izbjegla oštećenja prilikom ugradnje: Priloge B4
7) Otpornost na čupanje sidra: Priloge C3, C4
8) Otpornost na lom betona: Priloge B3, C3, C4
9) Minimalna udaljenost ruba, razmak, debljina elementa kako bi se spriječiio lom betona tijekom ugradnje: Priloge A5, B3
10) Karakteristična udaljenost ruba i razmak kako bi se izbjegao lom betona pod opterećenjem: Priloge C3, C4
11) Otpornost na otkazivanje puhanja-nosivo područje glave: Priloge A4

Karakteristični otpor na smicanje (statičko i kvazi-statičko opterećenje):

12) Otpornost na lom čelika sidrenog vijka pri posmičnom opterećenju bez poluge: Priloge C10
13) Otpornost na lom čelika postavljanjem zasuna kanala pod posmičnim opterećenjem s polugom: Priloge C11
14) Otpornost na lom čelika ruba kanala, lom čelika veze između sidra i kanala ili lom čelika sidrenog kanala (posmično opterećenje u poprečnom smjeru): Priloge C6, C7
15) Otpornost na lom čelika spoja između rubova kanala i vijaka kanala (posmično opterećenje u uzdužnoj osi kanala): Prilog C8
16) Faktor osjetljivosti ugradnje: Prilog C8
17) Otpornost sidra na lom čelika: Priloge C6, C7
18) Otpornost na lom čelika spoja sidra i kanala: Priloge C6, C7
19) Otpornost na otkazivanje: Prilog C8
20) Otpornost na lom ruba betona: Priloge C8

karakteristična otpornost uslijed kombinirane statičke i kvazi statičke napetosti i smičnog opterećenja

21) Otpornost kanala na lom čelika: Priloge C9

Karakteristična otpornost pri opterećenju napetosti od zamora:

22) otpornost na zamor čelika cijelog sustava (kontinuiranog ili tri-linearne fukcije) NPD
23) otpornost na zamor čelika cijelog sustava NPD
24) otpornost na zamor betona (eksponencijalna funkcija) NPD
25) granica otpornosti na zamor betona NPD
26) Istisnine: Priloge C5, C9

Sigurnost u slučaju požara (BWR 2)

27) Reakcija na vatru: Klasa (A1)
28) Otpornost na vatru: Prilog C12

Trajnost:

29) Trajnost: Priloge A7, B1, B2

8. Odgovarajuća tehnička dokumentacija i/ili specifična tehnička dokumentacija: --

Svojstva gore navedenog proizvoda su u skladu sa skupom izjava o svojstvima.Ova izjava o svojstvima se izdaje, u skladu sa Europskom regulativom (EU) Br. 305/2011, pod punom odgovornošću gore navedenog proizvođača.

Za proizvođača i u njegovo ime potpisao:

Dr.-Ing. Oliver Geibig, Generalni direktor poslovne jedinice i inženjering

Jürgen Grün, Glavni direktor za kemiju i kvalitetu

Tumlingen, 2023-07-25

Ovaj DoP je pripremljen u različitim jezicima. U slučaju da postoji spor u tumačenju, engleska verzija će uvijek prevladati.

U aneksu se nalaze dodatni podaci na engleskom jeziku, koji ne podliježu zakonskoj regulativi.

Translation guidance Essential Characteristics and Performance Parameters for Annexes

Smjernice za prijevod. Bitne karakteristike i parametri izvedbe za dodatke

Mechanical resistance and stability (BWR 1) **Mehanička otpornost i stabilnost (BWR 1)**		
Characteristic resistance to tension load (static and quasi-static loading): **Karakteristični otpor na opterećenje (statičko i kvazi-statičko opterećenje):**		
1	Resistance to steel failure of anchors: **Otpornost sidra na lom čelika:**	$N_{Rk,s,a}$
2	Resistance to steel failure of the connection between anchors and channel: **Otpornost na lom čelika spoja sidra i kanala:**	$N_{Rk,s,c}$
3	Resistance to steel failure of channel lips and sunsequently pullout of channel bolt: **Otpornost na otkazivanje čeličnih rubova kanala i naknadno izvlačenje vijka kanala:**	$N^0_{Rk,s,l}$; $s_{l,N}$
4	Resistance to steel failure of channel bolt: **Otpornost na lom čelika vijka kanala:**	$N_{Rk,s}$
5	Resistance to steel failure by exceeding the bending strength of the channel: **Otpornost na lom čelika prekoračenjem čvrstoće na savijanje kanala:**	$M_{Rk,s,flex}$; s_{max}
6	Maximum installation torque moment to avoid damage during installation: **Najveći zakretni moment ugradnje kako bi se izbjegla oštećenja prilikom ugradnje:**	$T_{inst,g}$; ($T_{inst,s}$)
7	Resistance to pull-out failure of the anchor: **Otpornost na čupanje sidra:**	$N_{Rk,p}$
8	Resistance to concrete cone failure: **Otpornost na lom betona:**	$k_{cr,N}$; $k_{ucr,N}$; h_{ef}
9	Minimum edge distance, spacing, member thickness to prevent concrete splitting during installation: **Minimalna udaljenost ruba, razmak, debljina elementa kako bi se spriječiio lom betona tijekom ugradnje:**	s_{min}; c_{min}; h_{min}
10	Characteristic edge distance and spacing to avoid splitting of concrete under load: **Karakteristična udaljenost ruba i razmak kako bi se izbjegao lom betona pod opterećenjem:**	$s_{cr,sp}$; $c_{cr,sp}$
11	Resistance to blowout failure- bearing area of head: **Otpornost na otkazivanje puhanja-nosivo područje glave:**	A_h
Characteristic resistance to shear load (static and quasi-static loading): **Karakteristični otpor na smicanje (statičko i kvazi-statičko opterećenje):**		
12	Resistance to steel failure of channel bolt under shear loading without lever arm: **Otpornost na lom čelika sidrenog vijka pri posmičnom opterećenju bez poluge:**	$V_{Rk,s}$
13	Resistance to steel failure by bending of the channel bolt under shear load with lever arm: **Otpornost na lom čelika postavljanjem zasuna kanala pod posmičnim opterećenjem s polugom:**	$M^0_{Rk,s}$
14	Resistance to steel failure of channel lips, steel failure of connection between anchor and channel or steel failure of anchor (shear load in transverse direction): **Otpornost na lom čelika ruba kanala, lom čelika veze između sidra i kanala ili lom čelika sidrenog kanala (posmično opterećenje u poprečnom smjeru):**	$V^0_{Rk,s,l,y}$; $s_{l,V}$; $V_{Rk,s,c,y}$; $V_{Rk,s,a,y}$
15	Resistance to steel failure of connection between channel lips and channel bolt (shear load in longitudinal channel axis): **Otpornost na lom čelika spoja između rubova kanala i vijaka kanala (posmično opterećenje u uzdužnoj osi kanala):**	$V_{Rk,s,l,x}$
16	Factor for sensistivity to installation: **Faktor osjetljivosti ugradnje:**	γ_{inst}
17	Resistance to steel failure of the anchor: **Otpornost sidra na lom čelika:**	$V_{Rk,s,a,x}$
18	Resistance to steel failure of connection between anchor and channel: **Otpornost na lom čelika spoja sidra i kanala:**	$V_{Rk,s,c,x}$
19	Resistance to concrete pry-out failure: **Otpornost na otkazivanje:**	k_8
20	Resistance to concrete edge failure: **Otpornost na lom ruba betona:**	$k_{cr,V}$; $k_{ucr,V}$
Characteristic resistance under combined static and quasi-static tension and shear loading **karakteristična otpornost uslijed kombinirane statičke i kvazi statičke napetosti i smičnog opterećenja**		
21	Resistance to steel failure of the anchor channel: **Otpornost kanala na lom čelika:**	k_{13}, k_{14}
Characteristic resistance under fatigue tension loading: **Karakteristična otpornost pri opterećenju napetosti od zamora:**		
22	Fatigue resistance to steel failure of the whole system (continuous or tri-linear function): **otpornost na zamor čelika cijelog sustava (kontinuiranog ili tri-linearne fukcije)**	$\Delta N_{Rk,s,0,n}$ (n=1 to n=∞)
23	Fatigue limit resistance to steel failure of the whole system: **otpornost na zamor čelika cijelog sustava**	$\Delta N_{Rk,s,0,\infty}$
24	Fatigue resistance to concrete related failure (exponential function): **otpornost na zamor betona (eksponencijalna funkcija)**	$\Delta N_{Rk,c,0,n}$; $\Delta N_{Rk,p,0,n}$ (n=1 to n=∞)
25	Fatigue limit resistance to concrete related failure: **granica otpornosti na zamor betona**	$\Delta N_{Rk,c,0,\infty}$; $\Delta N_{Rk,p,0,\infty}$
26	Displacements: **Istisnine:**	δ_{N0}; $\delta_{N\infty}$; $\delta_{V,y,0}$; $\delta_{V,y,\infty}$ $\delta_{V,x,0}$; $\delta_{V,x,\infty}$
Safety in case of fire (BWR 2) **Sigurnost u slučaju požara (BWR 2)**		
27	Reaction to fire: **Reakcija na vatru:**	Class
28	Resistance to fire: **Otpornost na vatru:**	$N_{Rk,s,fi}$; $V_{Rk,s,fi}$
Durability: **Trajnost:**		
29	Durability: **Trajnost:**	Descritpion

Specific Part

1 Technical description of the product

The fischer Anchor Channel FES with fischer Channel Bolts FBC is a system consisting of a C-shaped channel profile of steel and at least two metal anchors non-detachably fixed on the channel back and fischer Channel Bolts.

The anchor channel is embedded surface-flush in the concrete. fischer Channel Bolts with appropriate hexagonal nuts and washers are fixed to the channel.

The product description is given in Annex A.

2 Specification of the intended use in accordance with the applicable European Assessment Document

The performances given in Section 3 are only valid if the anchor channel is used in compliance with the specifications and conditions given in Annex B.

The verifications and assessment methods on which this European Technical Assessment is based lead to the assumption of a working life of the anchor channel of at least 50 years. The indications given on the working life cannot be interpreted as a guarantee given by the producer, but are to be regarded only as a means for choosing the right products in relation to the expected economically reasonable working life of the works.

3 Performance of the product and references to the methods used for its assessment

3.1 Mechanical resistance and stability (BWR 1)

Essential characteristic	Performance
Characteristic resistance under tension load (static and quasi-static loading)	
- Resistance to steel failure of anchors	$N_{Rk,s,a}$ see Annex C1
- Resistance to steel failure of the connection between anchors and channel	$N_{Rk,s,c}$ see Annex C1
- Resistance to steel failure of channel lips and subsequently pull-out of channel bolt	$N^0_{Rk,s,l}$; $s_{l,N}$ see Annex C1
- Resistance to steel failure of channel bolt	$N_{Rk,s}$ see Annex C10
- Resistance to steel failure by exceeding the bending strength of the channel	s_{max} see Annex A5 $M_{Rk,s,flex}$ see Annex C2
- Maximum installation torque to avoid damage during installation	$T_{inst,g}$; $T_{inst,s}$ see Annex B4
- Resistance to pull-out failure of the anchor	$N_{Rk,p}$ see Annex C3
- Resistance to concrete cone failure	h_{ef} see Annex B3 $k_{cr,N}$; $k_{ucr,N}$ see Annex C4
- Minimum edge distances, spacing and member thickness to avoid concrete splitting during installation	s_{min} see Annex A5 c_{min} ; h_{min} see Annex B3
- Characteristic edge distance and spacing to avoid splitting of concrete under load	$s_{cr,sp}$; $c_{cr,sp}$ see Annex C4
- Resistance to blowout failure - bearing area of anchor head	A_h see Annex A4

Essential characteristic	Performance
Characteristic resistance under shear load (static and quasi-static loading)	
- Resistance to steel failure of channel bolt under shear loading without lever arm	$V_{Rk,s}$ see Annex C10
- Resistance to steel failure by bending of the channel bolt under shear load with lever arm	$M^0_{Rk,s}$ see Annex C11
- Resistance to steel failure of channel lips, steel failure of connection between anchor and channel and steel failure of anchor (shear load in transverse direction)	$V^0_{Rk,s,l,y}$; $s_{l,V}$; $V_{Rk,s,c,y}$; $V_{Rk,s,a,y}$ see Annex C6
- Resistance to steel failure of connection between channel lips and channel bolt (shear load in longitudinal channel axis)	$V_{Rk,s,l,x}$ see Annex C8
- Factor for sensitivity to installation (longitudinal shear)	γ_{inst} see Annex C8
- Resistance to steel failure of the anchor (longitudinal shear)	$V_{Rk,s,a,x}$ see Annex C6
- Resistance to steel failure of connection between anchor and channel (longitudinal shear)	$V_{Rk,s,c,x}$ see Annex C6
- Resistance to concrete pry-out failure	k_8 see Annex C8
- Resistance to concrete edge failure	$k_{cr,V}$; $k_{ucr,V}$ see Annex C8
Characteristic resistance under combined tension and shear load (static and quasi-static load)	
- Resistance to steel failure of the anchor channel	k_{13} ; k_{14} see Annex C9
Characteristic resistance under fatigue tension loading	
- Fatigue resistance to steel failure of the whole system (continuous or tri-linear function, test method A1, A2)	No Performance assessed
- Fatigue limit resistance to steel failure of the whole system (test method B)	No Performance assessed
- Fatigue resistance to concrete related failure (exponential function, test method A1, A2)	No Performance assessed
- Fatigue limit resistance to concrete related failure (test method B)	No Performance assessed
Displacements (static and quasi-static load)	δ_{N0} ; $\delta_{N\infty}$ see Annex C5 $\delta_{V,y,0}$; $\delta_{V,y,\infty}$; $\delta_{V,x,0}$; $\delta_{V,x,\infty}$ see Annex C9

3.2 Safety in case of fire (BWR 2)

Essential characteristic	Performance
Reaction to fire	Class A1
Characteristic resistance to fire	$N_{Rk,s,fi}$; $V_{Rk,s,fi}$ see Annex C12

3.3 Aspects of durability linked with the Basic Works Requirements

Essential characteristic	Performance
Durability	No performance assessed

4 Assessment and verification of constancy of performance (AVCP) system applied, with reference to its legal base

In accordance with EAD No. 330008-03-0601, the applicable European legal act is: [2000/273/EC].

The system to be applied is: 1

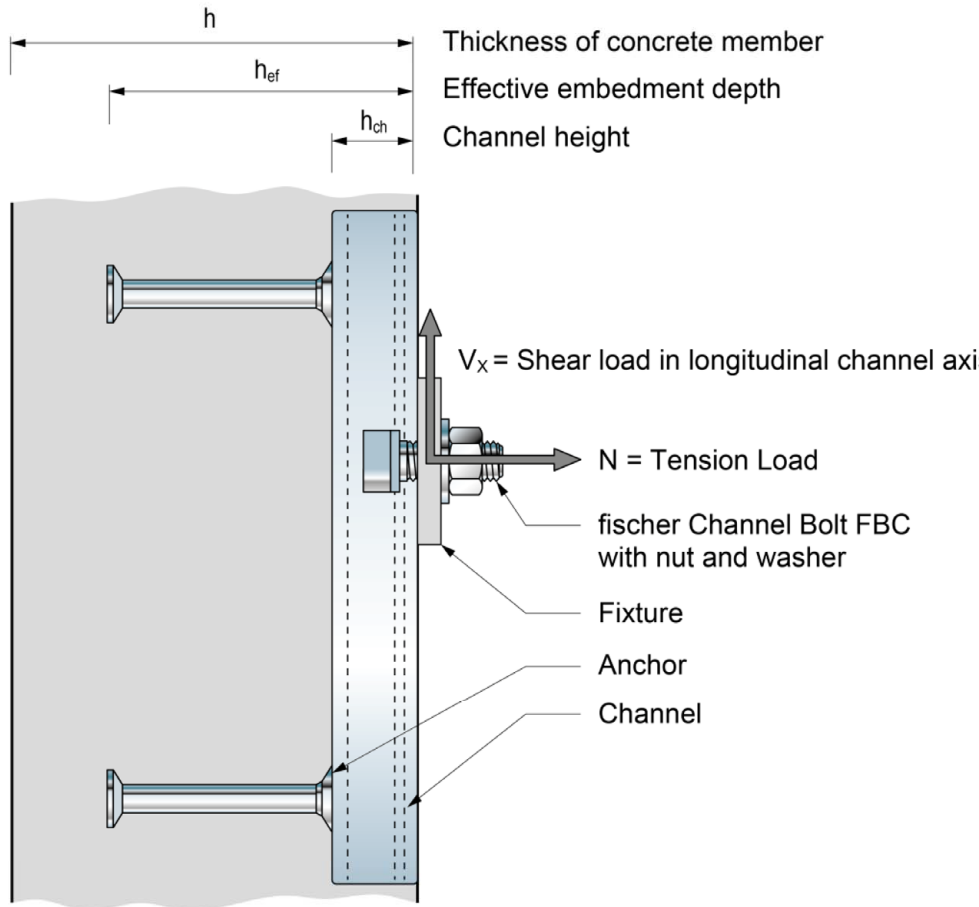

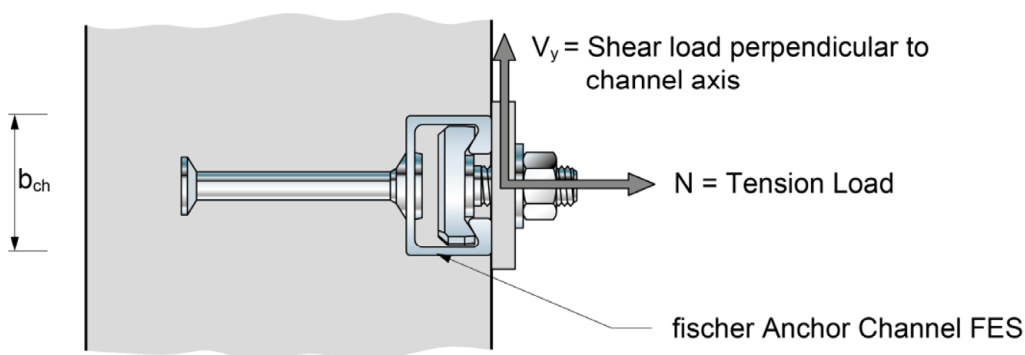

fischer Anchor Channel FES with fischer Channel Bolts FBC

Product Description
Installed condition

Annex A1

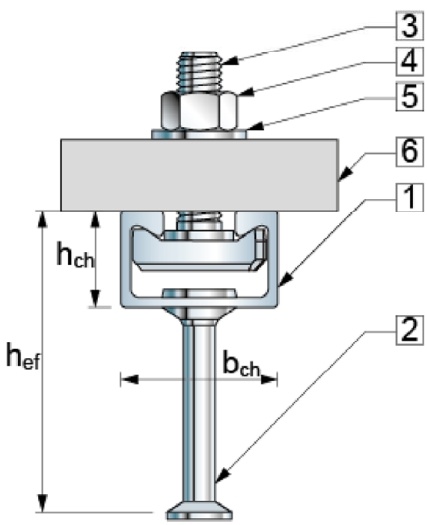

Round Anchor

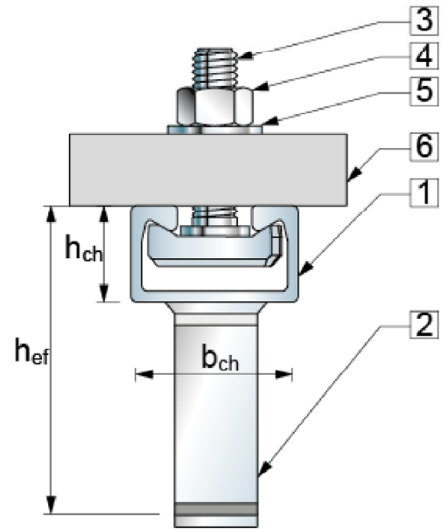

I-Anchor

fischer Anchor Channel FES
1 Channel profile
2 Anchor
3 Channel bolt
4 Hexagonal nut
5 Washer
6 Fixture

Marking of the fischer anchor channel FES:

e.g..: I-50/30

	= Identifying mark of the manufacturer
I	= Additional marking for I-anchors No marking for round anchors
50/30(-P)	= Anchor channel size (29/20; 38/23; 40/22; 50/30; 52/34, 28/15; 38/17; 40/25; 49/30; 54/33)
P	= Additional marking for P-version

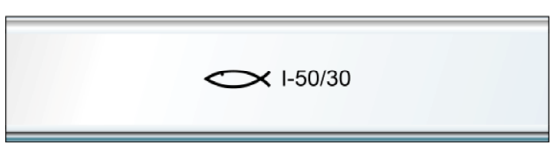

Stamped into back of channel
Optional: printed on channel web or channel lips
H = Hot rolled channel, C = Cold formed channel
No marking for material acc. Annex A7 Table 6 (Channel profile)

Marking of the fischer channel bolt FBC:

e.g: 5030 8.8 N

	= Identifying mark of the manufacturer
5030	= Size of channel bolt
8.8	= Steel grade
A4-70	= Stainless steel
N	= Notching channel bolt (if applicable)
●	= Electroplated No marking for hot dip galvanized

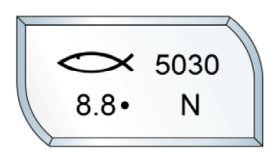

Additional marking of channel bolt (smooth, serrated, notching channel bolt head) according to Annex A6 at the top of thread.

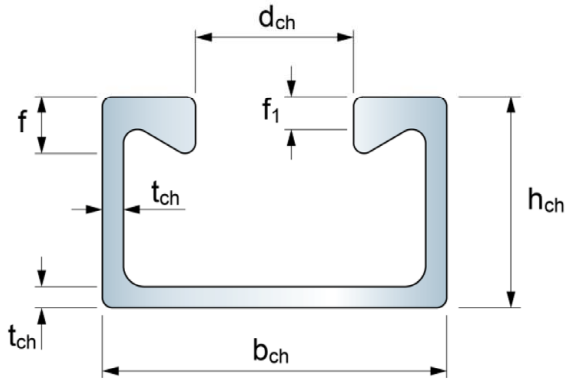

FES-H-(I-)-40/22(-P), -50/30(-P), -52/34

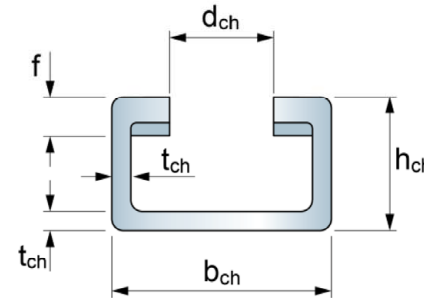

FES-H-S-29/20, -38/23 (serrated)

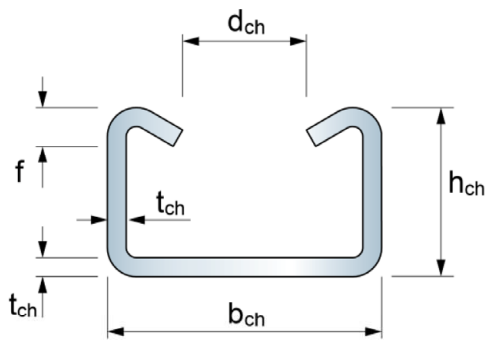

FES-C-40/25, -49/30, -54/33

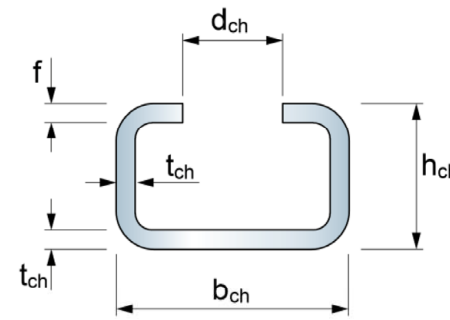

FES-C-28/15, -38/17

Table 1: Dimensions of hot-rolled and cold-formed channel profile

Anchor Channel FES-	b_{ch} [mm]	h_{ch} [mm]	t_{ch} [mm]	d_{ch} [mm]	f [mm]	f_1 [mm]	I_y [mm^4]
C-28/15	28,0	15,5	2,3	12,0	2,3	-[1)]	4.280
C-38/17	38,0	17,3	3,0	18,0	3,0	-[1)]	8.240
C-40/25	40,0	25,0	2,8	18,0	6,0	-[1)]	20.340
C-49/30	50,0	30,0	3,3	22,0	7,0	-[1)]	43.080
C-54/33	54,0	33,0	5,0	22,0	8,5	-[1)]	74.090
H-S-29/20	30,0	20,0	3,0	14,0	5,2	-[1)]	11.150
H-S-38/23	38,0	23,0	3,3	18,0	6,0	-[1)]	21.070
H-(I-)40/22(-P)	40,0	23,5	2,6	18,0	6,2	3,6	21.660
H-(I-)50/30(-P)	50,0	30,0	3,0	22,5	8,1	5,5	54.960
H-(I-)52/34	52,5	34,0	4,0	22,5	11,5	8,3	96.330

[1)] This dimension is not available for this product.

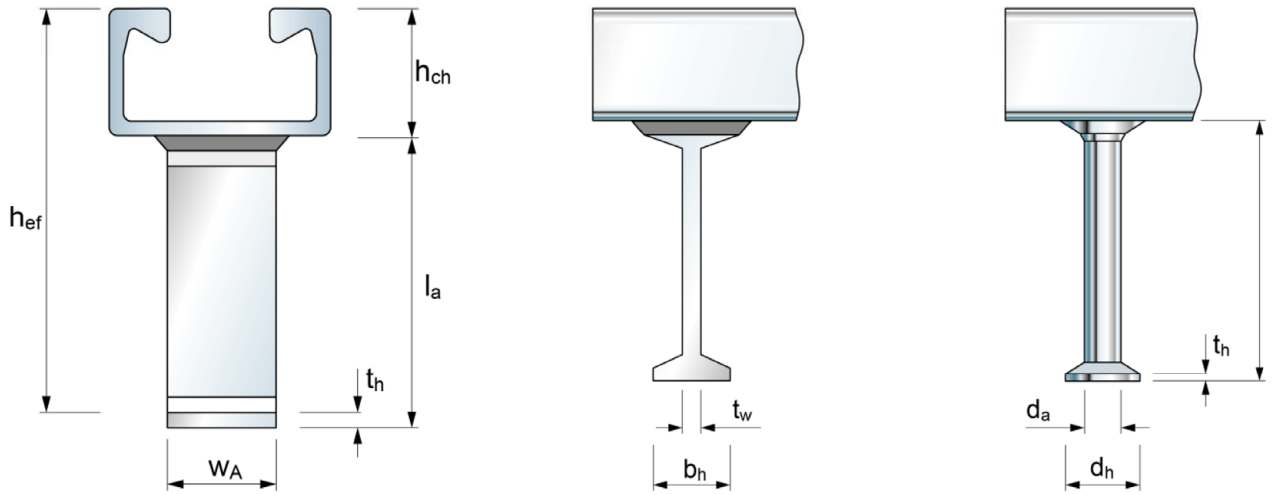

Table 2: Dimensions of anchor (welded I-anchor or forged round anchor)

Anchor Channel FES -	I-anchor						Round anchor				
	$l_{a,min}$ [mm]	$t_{w,min}$ [mm]	$b_{h,min}$ [mm]	t_h [mm]	w_A [mm]	$A_{h,min}$ [mm²]	$l_{a,min}$ [mm]	d_a [mm]	d_h [mm]	t_h [mm]	A_h [mm²]
C-28/15	- [2]						31,0	6	12,0	1,3	85
C-38/17	- [2]						60,8	8	16,0	2,0	151
C-40/25	- [2]						56,0	8	16,0	2,0	151
C-49/30	- [2]						66,0	10	20,0	2,2	236
C-54/33	- [2]						124,5	11	24,3	2,5	369
H-S-29/20	- [2]						59,5	10	20,0	2,5	236
H-S-38/23	- [2]						76,2	10	20,0	2,2	236
H-(I-)40/22	62	5	20	5	20	300	68,5	8	16,0	2,0	151
H-40/22-P	- [2]						69,7	10	20,0	2,2	236
H-(I-)50/30	69	5	20	5	25	375	66,2	10	20,0	2,2	236
H-50/30-P	- [2]						78,5	11	24,3	2,5	369
H-(I-)52/34	126	5 [1]	20 [1]	5	40	600	123,5	11	24,3	2,5	369

[1] Alternative I-anchor: tw = 6 mm, bh = 25 mm.
[2] Product not available.

Table 3: Dimensions of Anchor Channels FES

Anchor channel FES-	Anchor type	s_{min} [mm]	s_{max} [mm]	x_{min} [mm]	x_{max} [mm]	l_{min} [mm]	l_{max} [mm]
C-28/15	round	100	200	25	35	150	6.070
C-38/17							
C-40/25			250				
C-49/30							
C-54/33							
H-S-29/20			200				
H-S-38/23			250				
H-(I-)40/22(-P)	round or I						
H-(I-)50/30	round or I						
H-I-52/34	I						
H-50/30-P H-52/34	round			35		170	

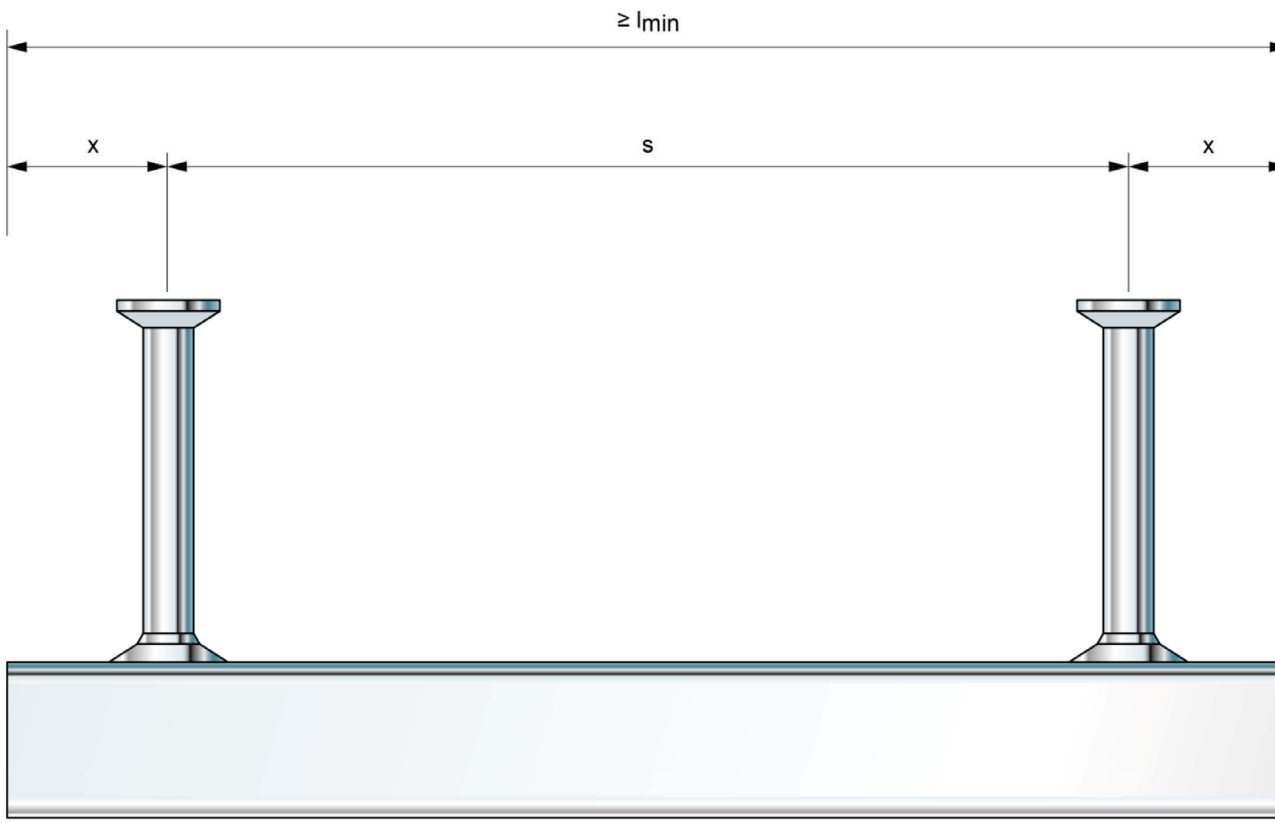

fischer Anchor Channel FES with fischer Channel Bolts FBC

Product Description
Anchor position and channel length

Annex A5

Table 4: Steel grade and corrosion class

Channel Bolt	Carbon steel [1]	Stainless steel[1]
Steel grade	8.8	A4-70
f_{uk} [N/mm²]	800 / 830	700
f_{yk} [N/mm²]	640 / 660 [2]	450
Finish	G [3] F [4]	-

[1] Material properties according to Annex A7.
[2] Material properties according to EN ISO 898-1.
[3] Electroplated.
[4] Hot-dip galvanized.

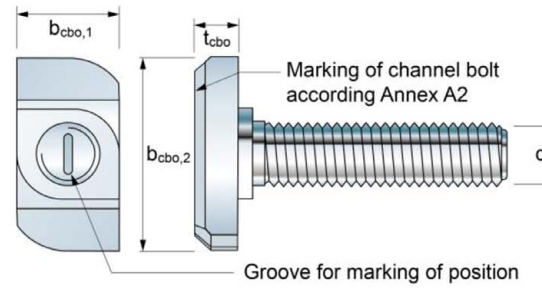

Channel Bolt FBC-28/15, FBC-38/17

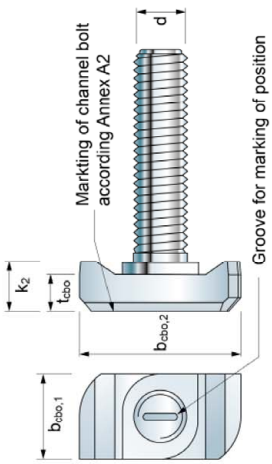

Channel Bolt
FBC-40/22, FBC-50/30

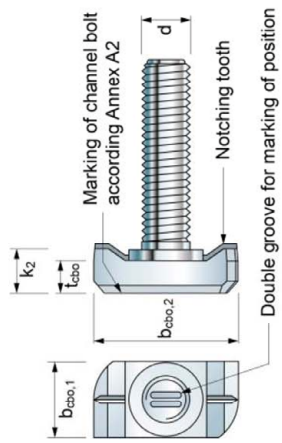

Notching Channel Bolt
FBC-N-40/22, FBC-N-50/30

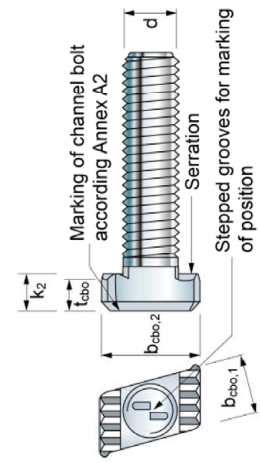

Serrated Channel Bolt
FBC-S-29/20, FBC-S-38/23

Table 5: Dimensions of fischer Channel Bolts FBC and matching fischer Anchor Channels FES

Anchor Channel FES-	Channel Bolt FBC-	Dimensions				
		d [mm]	$b_{cbo,1}$ [mm]	$b_{cbo,2}$ [mm]	t_{cbo} [mm]	k_2 [mm]
C-28/15	28/15 8.8	8 10 12	11,0	22,2	5,0 5,0 7,0	- [1]
C-38/17	38/17 8.8	10 12	16,0	30,0	6,0 7,0	- [1] - [1]
H-S-29/20	S-29/20 8.8	12	13,0	22,0	6,5	8,0
H-S-38/23 C-38/17	S-38/23 8.8	12 16	16,7	29,1	5,8	7,3
H(-I)-40/22(-P) C-40/25	40/22 8.8 40/22 8.8, A4-70 40/22 8.8, A4-70	10 12 16	14,0 14,0 17,0	32,5	8,0	11,0
H(-I)-40/22(-P)	N-40/22 8.8	16	17,0	33,0	7,8	10,3
C-49/30 H(-I)-50/30 C-54/33 H(-I)-52/34	50/30 8.8 50/30 8.8, A4-70 50/30 8.8, A4-70 50/30 8.8, A4-70	10 12 16 20	17,1 17,1 17,1 20,5	40,5	9,0 10,0 11,0 12,0	11,5 12,5 13,5 14,5
H(-I)-50/30(-P) H(-I)-52/34	N-50/30 8.8	16 20	17,5 21,0	42,2 40,5	12,0 12,0	15,5 15,5

[1] This dimension is not available for this product.

Table 6: Materials and properties

Component	Carbon steel			Stainless steel
	Mechanical properties	Coating	Coating	Mechanical properties
1	2a	2a	2b	3
Channel profile	1.0038, 1.0044 acc. to EN 10025:2004 1.0976, 1.0979 acc. to EN 10149:2013	Hot dip galvanized ≥ 50 µm acc. to EN ISO 1461:2022		- [2]
Anchor	1.0038, 1.0213, 1.0214 acc. to EN 10025:2004 1.5525, 1.5535 acc. to EN 10263:2017 1.5523	Hot dip galvanized ≥ 50 µm acc. to EN ISO 1461:2022		- [2]
Channel bolt	Steel grade 8.8 acc. to EN ISO 898-1:2013	Electroplated acc. to EN ISO 4042:2018	Hot dip galvanized ≥ 50 µm acc. to EN ISO 10684:2004 + AC:2009	Steel grade 70 according to EN ISO 3506-1: 2020
Plain washer [1] acc. to EN ISO 7089:2000 and EN ISO 7093-1:2000	Hardness class A ≥ 200 HV	Electroplated acc. to EN ISO 4042:2018	Hot dip galvanized ≥ 50 µm acc. to EN ISO 10684:2004 + AC:2009	1.4401, 1.4404, 1.4571; 1.4578 according to EN 10088: 2009
Hexagonal nut acc. to EN ISO 4032:2012	Property class 5 or 8 acc. to EN ISO 898-2:2012	Electroplated acc. to EN ISO 4042:2018	Hot dip galvanized ≥ 50 µm acc. to EN ISO 10684:2004 + AC:2009	Property class 70 or 80 according to EN ISO 3506-2: 2020

[1] Not in the scope of delivery.
[2] Product not available.

Specification of intended use

Anchor channels and channel bolts subject to:

- Static and quasi-static tension and shear perpendicular to the longitudinal axis of the channel for FES in combination with channel bolt FBC.
- Static and quasi-static tension, shear perpendicular to the longitudinal axis of the channel and shear in the direction of the longitudinal axis of the channel for FES-H(-I)-40/22(-P) , FES-H(-I)-50/30(-P) or FES-H(-I)-52/34 in combination with notching channel bolt FBC-N.
- Static and quasi-static tension, shear perpendicular to the longitudinal axis of the channel and shear in the direction of the longitudinal axis of the channel for serrated anchor channels FES-H-S in combination with serrated channel bolts FBC-S.
- Fire exposure: Only for concrete class C20/25 to C50/60.

Base materials:

- Reinforced or unreinforced normal weight concrete according to EN 206-1:2000.
- Strength classes C12/15 to C90/105 according to EN 206-1:2000
- Cracked or uncracked concrete.

Use conditions (Environmental conditions):

- Structures subject to dry internal conditions
  (anchor channels and channel bolts according to Annex A7, Table 6, column 2a and 2b, 3).
- Structures subject to internal conditions with usual humidity (e.g. kitchens, bathrooms and laundries in residential buildings, exceptional permanent damp conditions and application under water)
  (anchor channels and channel bolts according to Annex A7, Table 6, column 2b, 3).

Design:

- Anchor channels are designed under the responsibility of an engineer experienced in anchorages and concrete work.
- Verifiable calculation notes and drawings are prepared taking account of the loads to be anchored. The position of the anchor channel and channel bolts are indicated on the design drawings (e.g. position of the anchor channel relative to the reinforcement or to supports).
- For static and quasi-static loading as well as fire exposure the anchor channels have to be designed in accordance with EOTA TR 047 “Design of Anchor Channels”, March 2018 or EN 1992-4:2018.
- The characteristic resistances are calculated with the minimum effective embedment depth.

Installation:

- The installation of anchor channels is carried out by appropriately qualified personnel under the supervision of the person responsible for the technical matters on site.
- Use of the anchor channels only as supplied by the manufacturer - without any manipulations, repositioning or exchanging of channel components.
- Cutting of anchor channels is allowed only if pieces according to Annex A5, Table 3 are generated including end spacing x and minimum channel length l_{min} and only to be used in dry internal conditions.
- Installation in accordance with the installation instruction given in Annexes B5, B6, B7 or B8.
- The anchor channels are fixed on the formwork, reinforcement or auxiliary construction such that no movement of the channels will occur during the time of laying the reinforcement and of placing and compacting the concrete.
- The concrete around the head of the anchors is properly compacted. The channels are protected from penetration of concrete into the internal space of the channels.
- Washers may be chosen according to Annex A7 and provided separately by the user.
- Orientating the channel bolt (groove according to Annex B6, B7 and B8) rectangular to the channel axis.
- The required installation torque given in Annex B4 must be applied and must not be exceeded.
- Notching channel bolts FBC-N may be used only once after applying the installation torque $T_{inst,s}$.

Table 7: Installation parameters

Anchor Channel FES-			C-28/15	C-38/17	H-S-29/20	H-S-38/23	C-40/25 H-40/22 H-40/22-P H-I-40/22	C-49/30 H-50/30 H-50/30-P H-I-50/30	C-54/33 H-52/34 H-I-52/34
Minimum effective embedment depth	$h_{ef,min}$	[mm]	45	76	77	97	79 90 91 79	94 94 106 94	155 155 155
Minimum edge distance	c_{min}		40	50	75	100	50 50 50 50	75 75 75 75	100 100 100
Minimum thickness of concrete member	h_{min} [1)]		70	100	100	100	100 100 100 100	100 100 108 100	160 160 170

[1)] $h_{min} = h_{ef} + t_h + c_{nom}$; c_{nom} nach EN 1992-1-1:2004 + AC:2010.

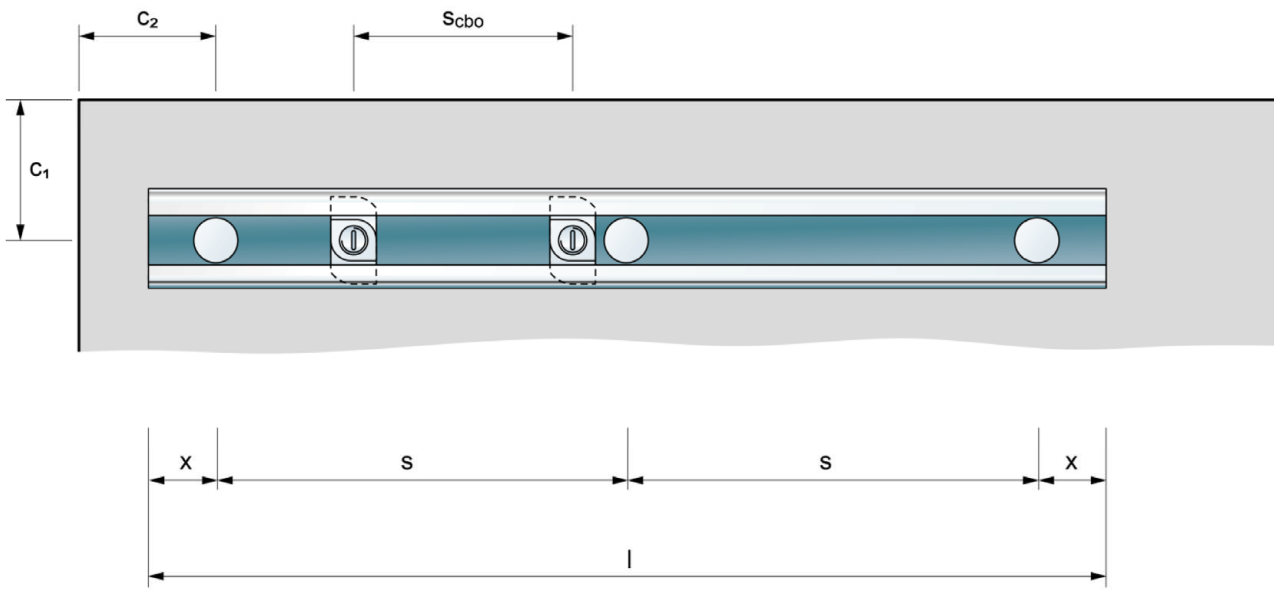

Table 8: Minimum spacing for channel bolts

Channel bolt			M8	M10	M12	M16	M20
Minimum spacing between channel bolts	$s_{cbo,min}$	[mm]	40	50	60	80	100

Table 9: Required installation torque T_{inst}

fischer Anchor channel FES-	fischer Channel Bolt FBC	Thread diameter	T_{inst} [1] [Nm]			
			General		Steel - steel contact	
			$T_{inst,g}$		$T_{inst,s}$	
			8.8	A4-70	8.8	A4-70
C-28/15	28/15	M8	7	-[2]	15	-[2]
		M10	10	-[2]	30	-[2]
		M12	13	-[2]	45	-[2]
C-38/17	38/17	M10	15	-[2]	30	-[2]
		M12	20	-[2]	45	-[2]
H-S-29/20	S-29/20	M12	80	-[2]	80	-[2]
H-S-38/23	S-38/23	M12	80	-[2]	80	-[2]
		M16	100	-[2]	100	-[2]
C-38/17		M12	40	-[2]	80	-[2]
		M16	50	-[2]	100	-[2]
H(-I)-40/22(-P) C-40/25	40/22	M10	15	-[2]	30	-[2]
		M12	24	24	45	45
		M16	32	32	100	100
	N-40/22	M16	-[2]	-[2]	200	-[2]
C-49/30 H(-I)-50/30(-P) C-54/33 H(-I)-52/34	50/30	M10	15	-[2]	30	-[2]
		M12	25	25	45	45
		M16	60	60	100	100
		M20	75	75	230	230
H(-I)-50/30(-P), H(-I)-52/34	N-50/30	M16	-[2]	-[2]	200	-[2]
		M20	-[2]	-[2]	400	-[2]

[1] T_{inst} must not be exceeded.
[2] Product not available.

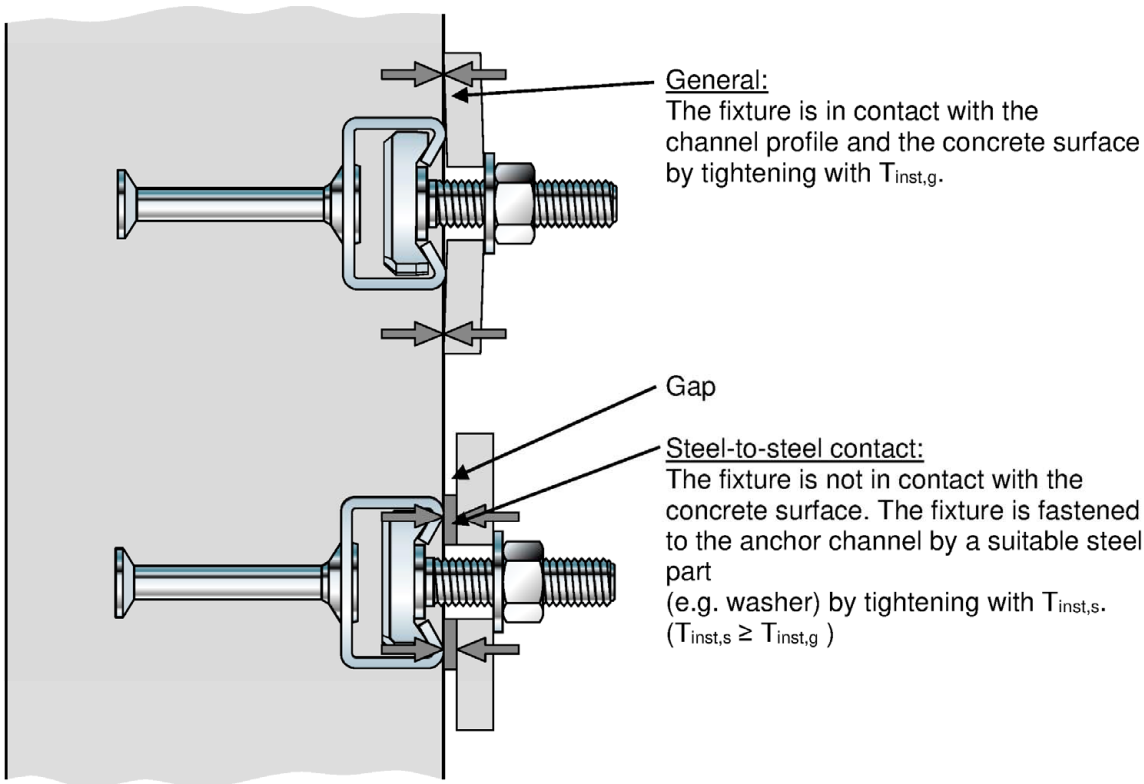

Anchor Channel FES

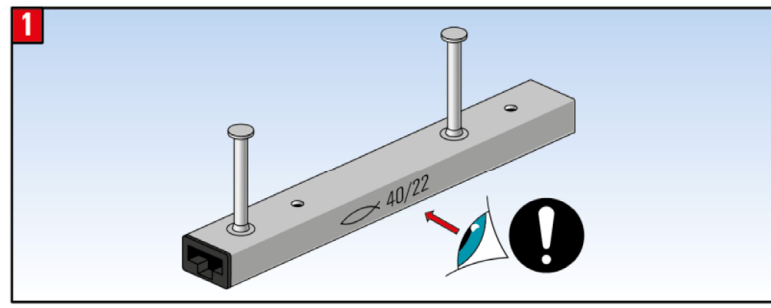

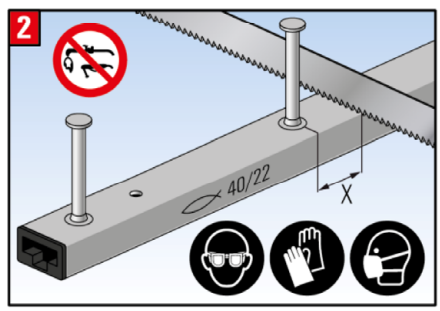

X	FES-H-	FES-C-
25-30mm	S-29/20	28/15
	S-38/23	38/17
	(I-)40/22(-P)	40/25
	(I-)50/30	49/30
	I-52/34	54/33
35mm	50/30-P	-
	52/34	-

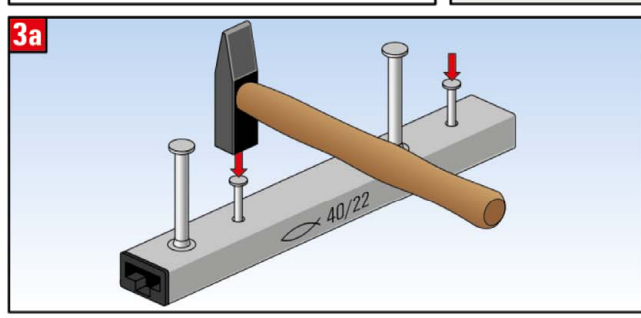

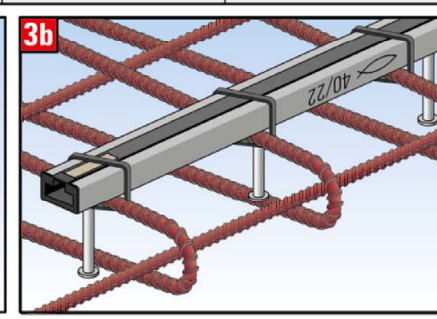

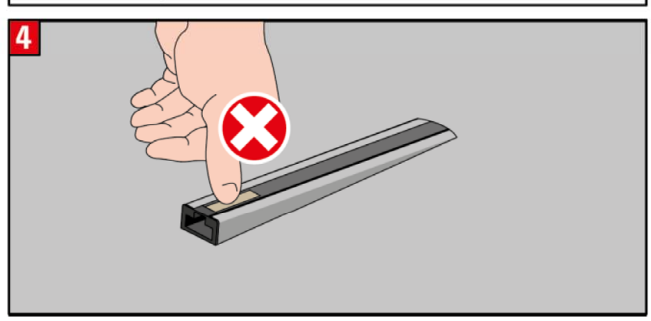

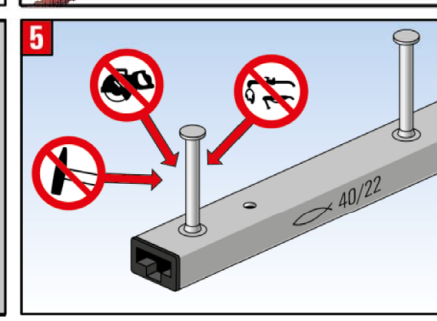

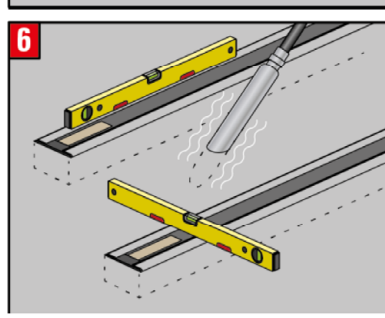

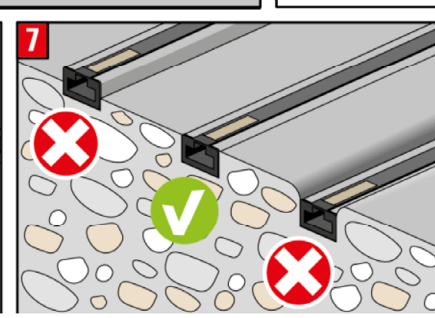

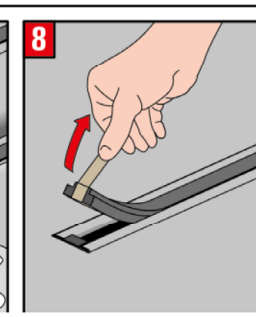

fischer Anchor Channel FES with fischer Channel Bolts FBC

Intended Use
Installation instruction for fischer Anchor Channels FES

Annex B5

Channel Bolts FBC

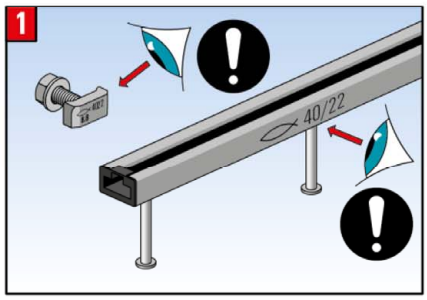

FBC-	FES-H-(I-)	FES-C-
2815	-	28/15
3817	-	38/17
4022	40/22	40/25
5030	50/30 52/34	49/30 54/33

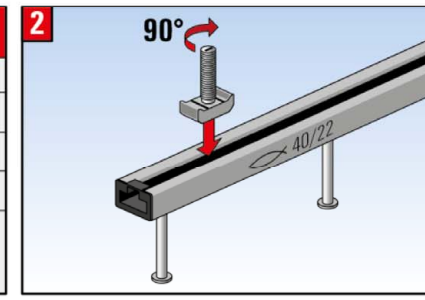

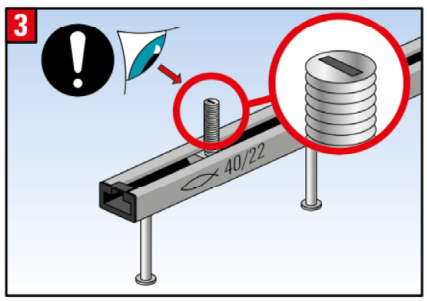

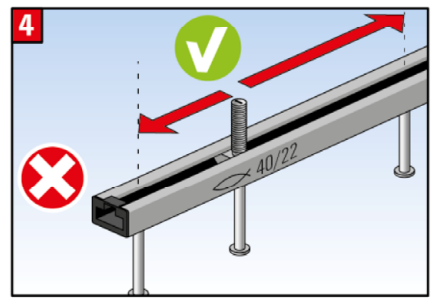

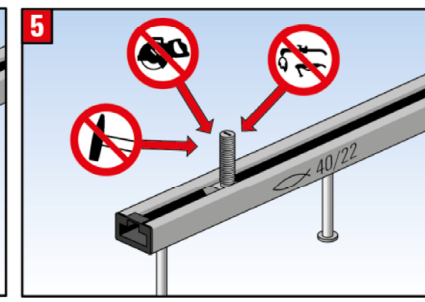

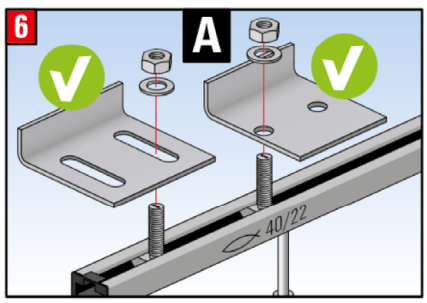

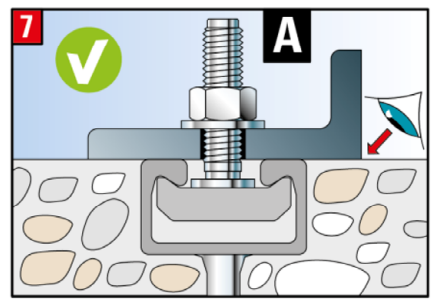

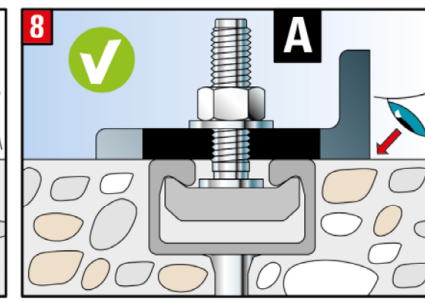

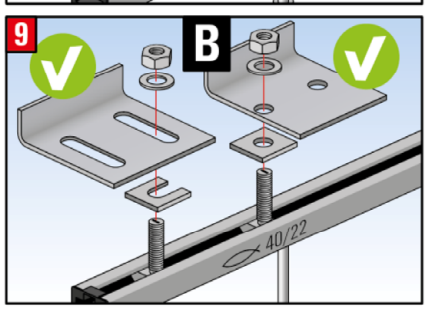

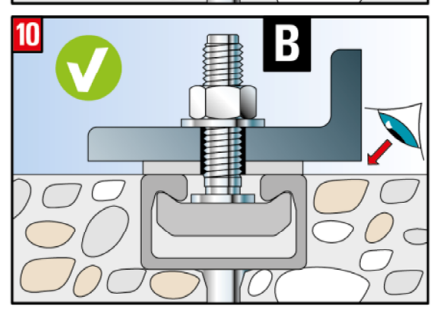

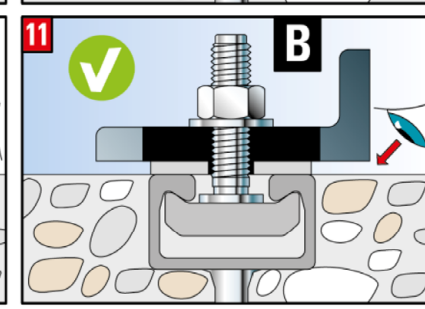

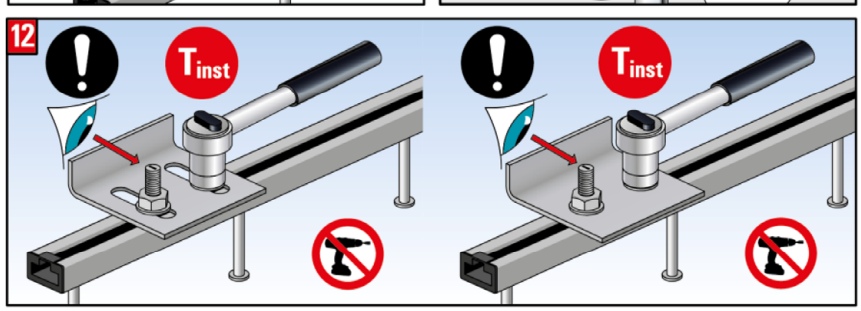

FBC	T_{inst} [Nm]	M8	M10	M12	M16	M20
2815	A	7	10	13	-	-
	B	15	30	45	-	-
3817	A	-	15	20	-	-
	B	-	30	45	-	-
4022	A	-	15	24	32	-
	B	-	30	45	100	-
5030	A	-	15	25	60	75
	B	-	30	45	100	230

T_{inst} must not be exceeded.

fischer Anchor Channel FES with fischer Channel Bolts FBC

Intended Use
Installation instruction for fischer Channel Bolts FBC

Serrated Channel Bolts FBC-S

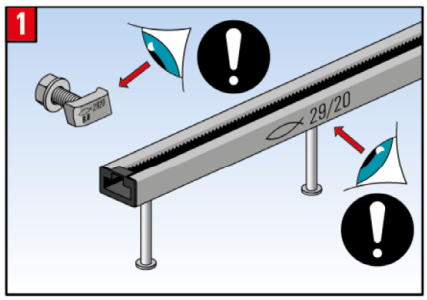

FBC-S-	FES-H-S-	FES-C-
2920	29/20	-
3823	38/23	38/17

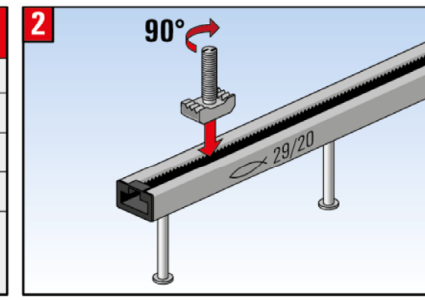

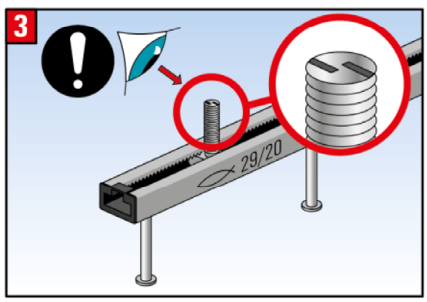

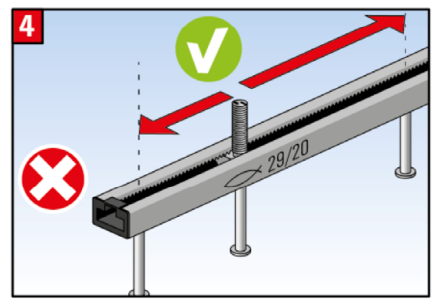

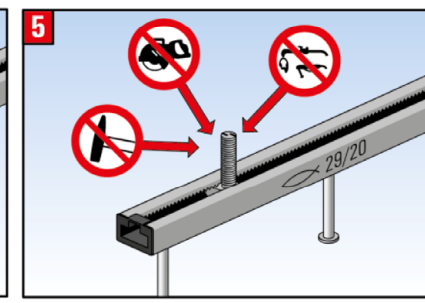

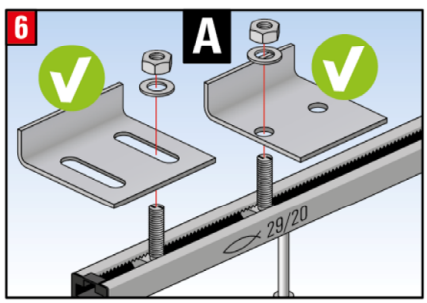

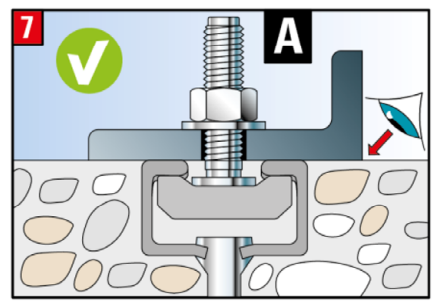

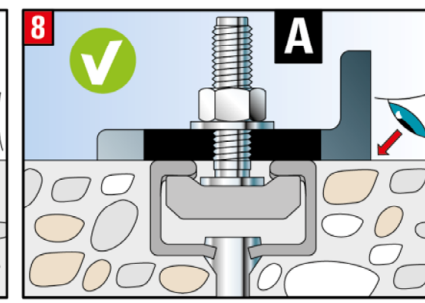

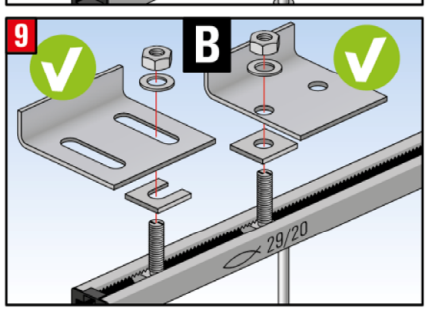

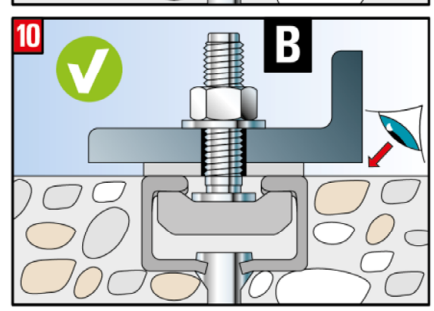

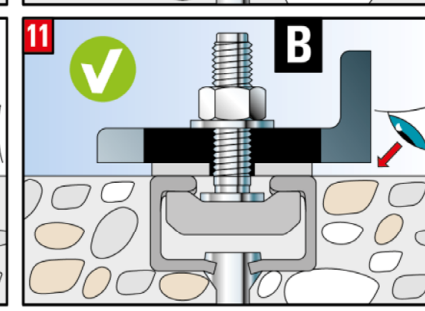

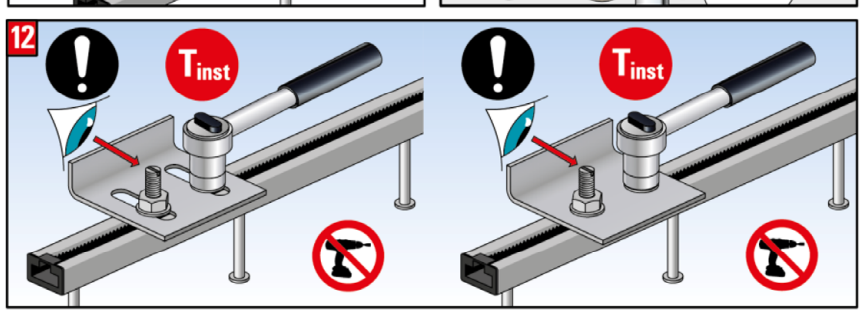

FBC-S-	FES-	T_{inst} [Nm]	M12	M16
2920	H-S-29/20	A	80	-
		B	80	-
3823	H-S-38/23	A	80	100
		B	80	100
	C-38/17	A	40	50
		B	80	100

T_{inst} must not be exceeded.

fischer Anchor Channel FES with fischer Channel Bolts FBC

Intended Use
Installation instruction for Serrated fischer Channel Bolts FBC-S

Annex B7

Notching Channel Bolts FBC-N

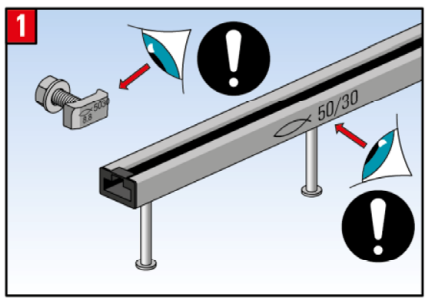

FBC-N-4022	40/22
FBC-N-5030	50/30 52/34

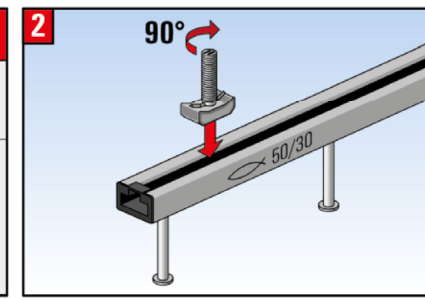

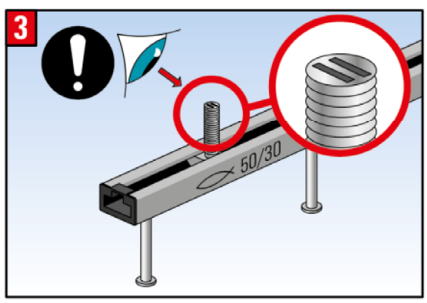

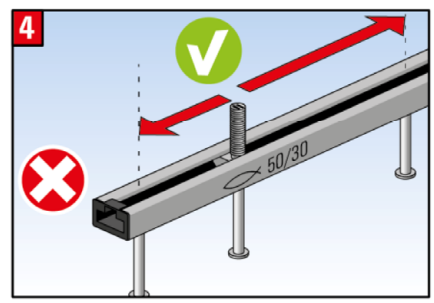

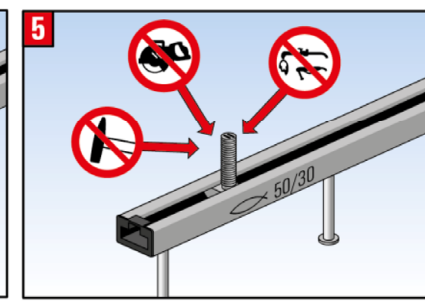

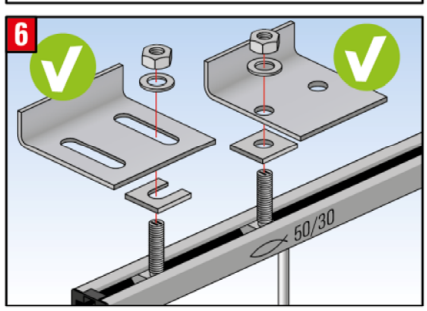

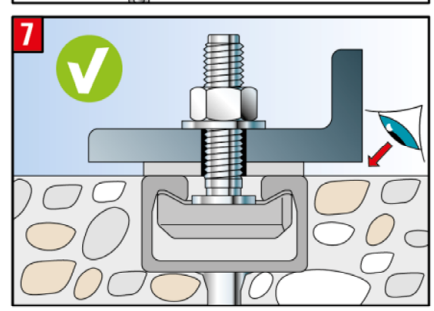

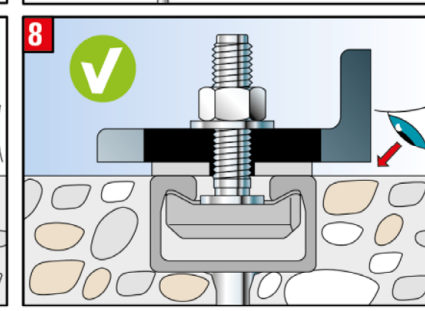

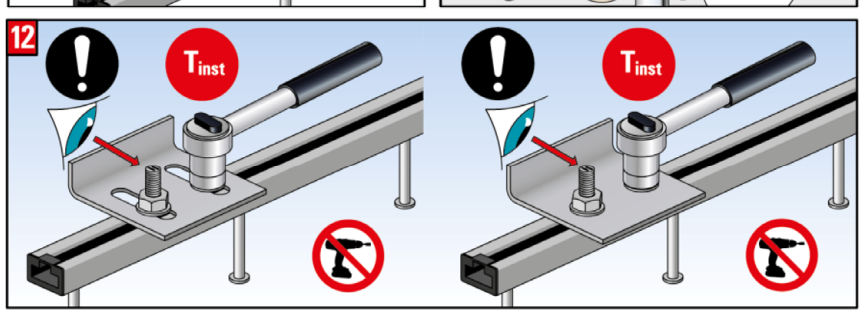

FBC-N-	FES-	T_{inst} [Nm]		
		M12	M16	M20
4022	H-(I-)40/22(-P)	-	200	-
5030	H-(I-)50/30(-P)	-	200	400
	H-(I-)52/34	-	200	400

T_{inst} must not be exceeded.

Table 10: Characteristic resistances under tension load – steel failure of hot-rolled anchor channels

Anchor Channel FES-H-			S-29/20	S-38/23	40/22 40/22-P I-40/22	50/30 50/30-P I-50/30	52/34 I-52/34
Steel failure: Anchor							
Characteristic resistance	$N_{Rk,s,a}$	[kN]	31,0	31,0	20,0 42,0 35,0	31,0 44,0 44,0	55,0 70,4
Partial factor	γ_{Ms} 1)	[-]	1,8				
Steel failure: Connection between anchor and channel							
Characteristic resistance	$N_{Rk,s,c}$	[kN]	20,2	30,3	20,0 40,1 38,0	31,0 44,0 40,0	55,0 70,4
Partial factor	γ_{Ms} 1)	[-]	1,8				
Steel failure: Local flexure of channel lips							
Characteristic spacing of channel bolts for $N_{Rk,s,l}$	$s_{l,N}$	[mm]	60	76	80 80 80	100 100 100	105 105
Characteristic resistance	$N^0_{Rk,s,l}$	[kN]	20,2	30,3	38,0 42,0 38,0	43,0 52,0 43,0	72,0 72,0
Partial factor	γ_{Ms} 1)	[-]	1,8				

1) In absence of other national regulations.

Table 11: Characteristic resistances under tension load – steel failure of cold-formed anchor channels

Anchor Channel FES-C-			28/15	38/17	40/25	49/30	54/33
Steel failure: Anchor							
Characteristic resistance	$N_{Rk,s,a}$	[kN]	9,0	20,0	20,0	31,0	55,0
Partial factor	γ_{Ms} 1)	[-]	1,8				
Steel failure: Connection between anchor and channel							
Characteristic resistance	$N_{Rk,s,c}$	[kN]	9,0	18,0	20,0	31,0	55,0
Partial factor	γ_{Ms} 1)	[-]	1,8				
Steel failure: Local flexure of channel lips							
Characteristic spacing of channel bolts for $N_{Rk,s,l}$	$s_{l,N}$	[mm]	56	76	80	100	108
Characteristic resistance	$N^0_{Rk,s,l}$	[kN]	9,0	18,0	20,0	31,0	55,0
Partial factor	γ_{Ms} 1)	[-]	1,8				

1) In absence of other national regulations.

Table 12: Characteristic flexural resistance of hot rolled channels under tension load

Anchor Channel FES-H-			S-29/20	S-38/23	40/22 40/22-P I-40/22	50/30 50/30-P I-50/30	52/34 I-52/34
Steel failure: Flexure of channel							
Characteristic flexural resistance of channel	$M_{Rk,s,flex}$	[Nm]	745	1.241	1.118 1.118 1.118	2.185 2.185 2.185	3.163 3.670
Partial factor	$\gamma_{Ms,flex}$ [1)]	[-]	1,15				

[1)] In absence of other national regulations.

Table 13: Characteristic flexural resistance of cold-formed channels under tension load

Anchor Channel FES-C-			28/15	38/17	40/25	49/30	54/33
Steel failure: Flexure of channel							
Characteristic flexural resistance of channel	$M_{Rk,s,flex}$	[Nm]	310	567	915	1.554	2.350
Partial factor	$\gamma_{Ms,flex}$ [1)]	[-]	1,15				

[1)] In absence of other national regulations.

Table 14: Characteristic resistances under tension load – concrete failure of hot rolled anchor channels

Anchor Channel FES-H-			S-29/20	S-38/23	40/22 40/22-P I-40/22	50/30 50/30-P I-50/30	52/34 I-52/34
Concrete failure: Pull-out failure							
Characteristic resistance in cracked concrete C12/15	$N_{Rk,p}$	[kN]	21,2	21,2	13,6 21,2 27,0	21,2 33,2 33,8	33,2 54,0
Characteristic resistance in uncracked concrete C12/15	$N_{Rk,p}$	[kN]	29,7	29,7	19,0 29,7 37,8	29,7 46,5 47,3	46,5 75,6
Increasing factor of $N_{Rk,p}= N_{Rk,p}(C12/15)*\psi_c$	C16/20 C20/25 C25/30 C30/37 C35/45 C40/50 C45/55 C50/60 C55/67 ≥C60/75	ψ_c [-]	1,33 1,67 2,08 2,50 2,92 3,33 3,75 4,17 4,58 5,00				
Partial factor	$\gamma_{Mp}=\gamma_{Mc}$ [1)]	[-]	1,5				
Concrete failure: Concrete cone failure							
Product factor k_1	$k_{cr,N}$	[-]	7,8	8,1	8,0 8,0 7,9	8,1 8,2 8,1	8,7 8,7
Product factor k_1	$k_{ucr,N}$	[-]	11,2	11,6	11,4 11,5 11,2	11,5 11,7 11,5	12,4 12,4
Partial factor	γ_{Mc} [1)]	[-]	1,5				
Concrete failure: Splitting							
Characteristic edge distance	$c_{cr,sp}$	[mm]	231	291	270 273 237	282 318 282	465 465
Characteristic spacing	$s_{cr,sp}$	[mm]	462	582	540 546 474	564 636 564	930 930
Partial factor	$\gamma_{Msp}=\gamma_{Mc}$ [1)]	[-]	1,5				

[1)] In absence of other national regulations.

Table 15: Characteristic resistances under tension load – concrete failure of cold-formed anchor channels

Anchor Channel FES-C-			28/15	38/17	40/25	49/30	54/33
Concrete failure: Pull-out failure							
Characteristic resistance in cracked concrete C12/15	$N_{Rk,p}$	[kN]	7,6	13,6	13,6	21,2	33,2
Characteristic resistance in uncracked concrete C12/15	$N_{Rk,p}$	[kN]	10,7	19,0	19,0	29,7	46,5
Increasing factor of $N_{Rk,p}= N_{Rk,p}(C12/15)*\psi_c$	C16/20 C20/25 C25/30 C30/37 C35/45 C40/50 C45/55 C50/60 C55/67 ≥C60/75	ψ_c [-]	1,33 1,67 2,08 2,50 2,92 3,33 3,75 4,17 4,58 5,00				
Partial factor	$\gamma_{Mp}=\gamma_{Mc}$ 1)	[-]	1,5				
Concrete failure: Concrete cone failure							
Product factor k_1	$k_{cr,N}$	[-]	7,2	7,8	7,9	8,1	8,7
	$k_{ucr,N}$	[-]	10,3	11,2	11,2	11,5	12,4
Partial factor	γ_{Mc} 1)	[-]	1,5				
Concrete failure: Splitting failure							
Characteristic edge distance	$c_{cr,sp}$	[mm]	135	228	237	282	465
Characteristic spacing	$s_{cr,sp}$	[mm]	270	456	474	564	930
Partial factor	$\gamma_{Msp} = \gamma_{Mc}$ 1)	[-]	1,5				

1) In absence of other national regulations.

Table 16: Displacements of hot-rolled anchor channels under tension load

Anchor Channel FES-H-			S-29/20	S-38/23	40/22 40/22-P I-40/22	50/30 50/30-P I-50/30	52/34 I-52/34
Tension load	N	[kN]	8,0	12,0	15,1 16,7 15,1	17,1 20,6 17,1	28,6 28,6
Short-term displacement [1)]	δ_{N0}	[mm]	1,4	2,0	2,2 2,5 2,2	1,5 1,8 1,5	1,9 1,9
Long-term displacement [1)]	$\delta_{N\infty}$	[mm]	2,8	4,0	4,5 5,0 4,5	2,9 3,5 2,9	3,7 3,7

[1)] Displacements in midspan of the anchor channel, including slip of channel bolt, deformation of channel lips, bending of the channel and slip of the anchor channel in concrete.

Table 17: Displacements of cold-formed anchor channels under tension load

Anchor Channel FES-C-			28/15	38/17	40/25	49/30	54/33
Zuglast	N	[kN]	3,6	7,1	7,9	12,3	21,8
Kurzzeitverschiebung [1)]	δ_{N0}	[mm]	0,7	1,3	1,5	1,4	1,2
Langzeitverschiebung [1)]	$\delta_{N\infty}$	[mm]	1,4	2,6	3,0	2,8	2,4

[1)] Displacements in midspan of the anchor channel, including slip of channel bolt, deformation of channel lips, bending of the channel and slip of the anchor channel in concret.

Table 18: Characteristic resistances under shear load – steel failure of hot-rolled anchor channels

Anchor Channel FES-H-			S-29/20	S-38/23	40/22 40/22-P I-40/22	50/30 50/30-P I-50/30	52/34 I-52/34
Steel failure: Anchor							
Characteristic resistance	$V_{Rk,s,a,y}$	[kN]	20,2	30,3	40,0 50,8 40,0	60,0 87,9 60,0	100 100
	$V_{Rk,s,a,x}$	[kN]	18,8	18,8	12,0 25,4 22,8	18,6 26,8 24,0	33,0 42,2
Partial factor	γ_{Ms} 1)	[-]	1,8				
Steel failure: Connection between anchor and channel							
Characteristic resistance	$V_{Rk,s,c,y}$	[kN]	20,2	30,3	40,0 50,8 40,0	60,0 87,9 60,0	100 100
	$V_{Rk,s,c,x}$	[kN]	12,1	18,2	12,0 25,2 22,8	18,6 26,4 24,0	33,0 42,2
Partial factor	γ_{Ms} 1)	[-]	1,8				
Steel failure: Local flexure of channel lips							
Characteristic spacing of channel bolts for $V_{Rk,s,l}$	$s_{l,V}$	[mm]	60	76	80 80 80	100 100 100	108 108
Characteristic resistance	$V^0_{Rk,s,l,y}$	[kN]	20,2	30,3	40,0 50,8 40,0	60,0 87,9 60,0	100 100
Partial factor	γ_{Ms} 1)	[-]	1,8				

1) In absence of other national regulations.
2) No performance assessed.

Table 19: Characteristic resistances under shear load – steel failure of cold-formed anchor channels

Anchor Channel FES-C-			28/15	38/17	40/25	49/30	54/33
Steel failure: Anchor							
Characteristic resistance	$V_{Rk,s,a,y}$	[kN]	9	18	20	31	55
	$V_{Rk,s,a,x}$	[kN]	-[2]	-[2]	-[2]	-[2]	-[2]
Partial factor	γ_{Ms} [1]	[-]	1,8				
Steel failure: Connection between anchor and channel							
Characteristic resistance	$V_{Rk,s,c,y}$	[kN]	9	18	20	31	55
	$V_{Rk,s,c,x}$	[kN]	-[2]	-[2]	-[2]	-[2]	-[2]
Partial factor	γ_{Ms} [1]	[-]	1,8				
Steel failure: Local flexure of channel lips							
Characteristic spacing of channel bolts for $V_{Rk,s,l}$	$s_{l,V}$	[mm]	56	76	80	100	108
Characteristic resistance	$V^0_{Rk,s,l,y}$	[kN]	9	18	20	31	55
Partial factor	γ_{Ms} [1]	[-]	1,8				

[1] In absence of other national regulations.
[2] No performance assessed.

Table 20: Characteristic resistance for shear load in direction of the longitudinal axis of the channel – steel failure

Anchor Channel FES-H-				S-29/20	S-38/23	40/22 40/22-P I-40/22	50/30 50/30-P I-50/30	52/34 I-52/34
Steel failure: Connection between channel lips and channel bolt								
Characteristic resistance	$V_{Rk,s,l,x}$	[kN]	FBC-S-29/20-M12-8.8	22,5	-[2]	-[2]	-[2]	-[2]
			FBC-S-38/23-M12-8.8	-[2]	23,2	-[2]	-[2]	-[2]
			FBC-S-38/23-M16-8.8	-[2]	30,3	-[2]	-[2]	-[2]
			FBC-N-40/22-M16-8.8	-[2]	-[2]	14,0	-[2]	-[2]
			FBC-N-50/30-M16-8.8	-[2]	-[2]	-[2]	10,7	10,7
			FBC-N-50/30-M20-8.8	-[2]	-[2]	-[2]	21,0	21,0
Installation factor	γ_{inst} [1]	[-]		1,2	1,0	1,2	M16: 1,2 M20: 1,4	M16: 1,2 M20: 1,4

[1] In absence of other national regulations.
[2] No performance assessed.

Table 21: Characteristic resistances of the hot-rolled anchor channel under shear load – concrete failure

Anchor Channel FES-H-			S-29/20	S-38/23	40/22 40/22-P I-40/22	50/30 50/30-P I-50/30	52/34 I-52/34
Concrete failure: Pry-out failure							
Product factor	k_8	[-]	2,0	2,0	2,0	2,0	2,0
Partial factor	γ_{Mc} [1]	[-]	1,5				
Concrete failure: Concrete edge failure							
Product factor k_{12}	$k_{cr,V}$	[-]	5,6	5,6	7,5	7,5	7,5
	$k_{ucr,V}$	[-]	7,8	7,8	10,5	10,5	10,5
Partial facto	γ_{Mc} [1]	[-]	1,5				

[1] In absence of other national regulations.

Table 22: Characteristic resistances of the cold-formed anchor channel under shear load – concrete failure

Anchor Channel FES-C			28/15	38/17	40/25	49/30	54/33
Concrete failure: Pry-out failure							
Product factor	k_8	[-]	1	2	2	2	2
Partial factor	γ_{Mc} [1]	[-]	1,5				
Concrete failure: Concrete edge failure							
Product factor k_{12}	$k_{cr,V}$	[-]	5,8	6,9	7,5	7,5	7,5
	$k_{ucr,V}$	[-]	8,1	9,7	10,5	10,5	10,5
Partial factor	γ_{Mc} [1]	[-]	1,5				

[1] In absence of other national regulations.

Table 23: Displacements under shear load

Anchor Channel FES-			C-28/15	C-38/17	H-S-29/20	H-S-38/23	C-40/25 H-40/22 H-40/22-P H-I-40/22	C-49/30 H-50/30 H-50/30-P H-I-50/30	C-54/33 H-52/34 H-I-52/34
Shear load perpendicular to the longitudinal axis of the channel	V_y	[kN]	3,6	7,1	8,0	12,0	7,9 15,9 20,2 15,9	12,3 23,8 34,9 23,8	21,8 39,7 39,7
Short-term displacement [1]	$\delta_{V,y,0}$	[mm]	0,7	1,3	1,4	2,0	1,5 2,1 2,2 2,1	1,4 3,7 2,1 3,7	1,2 4,0 4,0
Long-term displacement [1]	$\delta_{V,y,\infty}$	[mm]	1,1	2,0	2,1	3,0	2,3 3,2 3,3 3,2	2,1 5,5 3,2 5,5	1,8 5,9 5,9
Shear load in direction of the longitudinal axis of the channel	V_x	[kN]	-[3]	-[3]	6,6	12,0	-[3] 4,6 4,6 4,6	-[3] [4] [4] [4]	-[3] [4] [4] [4]
Short-term displacement [2]	$\delta_{V,x,0}$	[mm]	-[3]	-[3]	0,6	0,8	-[3] 0,9 0,9 0,9	-[3] [5] [5] [5]	-[3] [5] [5] [5]
Long-term displacement [2]	$\delta_{V,x,\infty}$	[mm]	-[3]	-[3]	0,9	1,3	-[3] 1,4 1,4 1,4	-[3] [6] [6] [6]	-[3] [6] [6] [6]

[1] Displacements in midspan of the anchor channel, including slip of channel bolt, deformation of channel lips and slip of the anchor channel in concrete.
[2] Displacements of the anchor channel, including slip of channel bolt, deformation of channel lips and slip of the anchor channel in concrete.
[3] No performance assessed.
[4] For FBC-N-5030-M16 V_x = 3,5 kN, for FBC-N-5030-M20 V_x = 6,7 kN.
[5] For FBC-N-5030-M16 $\delta_{V,x,0}$ = 0,4 mm, for FBC-N-5030-M20 $\delta_{V,x,0}$ = 0,1 mm.
[6] For FBC-N-5030-M16 $\delta_{V,x,\infty}$ = 0,6 mm, for FBC-N-5030-M20 $\delta_{V,x,\infty}$ = 0,2 mm.

Table 24: Characteristic resistances under combined tension and shear load

Anchor Channel FES-			C-28/15	C-38/17	H-S-29/20	H-S-38/23	C-40/25 H-40/22 H-40/22-P H-I-40/22	C-49/30 H-50/30 H-50/30-P H-I-50/30	C-54/33 H-52/34 H-I-52/34
Steel failure: Local flexure of channel lips and flexure of channel									
Product factor	k_{13}	[-]	according to EN 1992-4:2018, 7.4.3.1						
Steel failure: Anchor and connection between anchor and channel									
Product factor	k_{14}	[-]	according to EN 1992-4:2018, 7.4.3.1						

Table 25: Characteristic resistances under tension and shear load – steel failure of channel bolts

Channel bolt thread diameter				M8	M10	M12	M16	M20
Steel failure: Channel bolt								
Characteristic resistance	FBC-28/15	$N_{Rk,s}$	[kN]	29,2	33,0	45,1	-[2]	-[2]
	FBC-38/17			-[2]	46,4	67,4	-[2]	-[2]
	FBC-S-29/20			-[2]	-[2]	48,5	-[2]	-[2]
	FBC-S-38/23			-[2]	-[2]	67,4	71,5	-[2]
	FBC-40/22			-[2]	46,4	55,1	82,2	-[2]
	FBC-N-40/22			-[2]	-[2]	-[2]	100,9	-[2]
	FBC-50/30			-[2]	46,4	67,4	96,5	127,2
	FBC-N-50/30			-[2]	-[2]	-[2]	113,5	134,0
Partial factor		γ_{Ms} [1]	[-]	1,5				
Steel failure: Channel bolt				A4-70				
Characteristic resistance	FBC-40/22-A4-70	$N_{Rk,s}$	[kN]	-[2]	-[2]	54,9	102,8	-[2]
	FBC-50/30-A4-70			-[2]	-[2]	59,0	82,8	163,1
Partial factor		γ_{Ms} [1]	[-]	1,87				
Characteristic shear resistance 8.8		$V_{Rk,s,}$	[kN]	14,6	23,2	33,7	62,8	98,0
Characteristic shear resistance A4-70				-[2]	-[2]	35,4	65,9	102,9
Partial factor (shear loads 8.8)		γ_{Ms} [1]	[-]	1,25				
Partial factor (shear loads A4-70)		γ_{Ms} [1]	[-]	1,56				

[1] In absence of other national regulations.
[2] No performance assessed.

Table 26: Characteristic resistances under shear load with lever arm – steel failure of channel bolts

Channel bolt [2] thread diameter					M8	M10	M12	M16	M20
Steel failure									
Characteristic flexural resistance	$M^0_{Rk,s}$	[Nm]	FBC-(S-) (N-)	8.8	30,0	59,8	104,8	266,4	519,3
				A4-70	-[2]	-[2]	91,7	233,1	454,4
Partial factor	γ_{Ms} [1]	[-]	FBC-(S-) (N-)	8.8	1,25				
				A4-70	1,56				
Internal lever arm	a	[mm]	FBC-28/15	8.8	16,7	18,1	19,4	-[3]	-[3]
			FBC-38/17	8.8	-[3]	22,7	24,0	-[3]	-[3]
			FBC-S-29/20	8.8	-[3]	-[3]	20,0	-[3]	-[3]
			FBC-S-38/23	8.8	-[3]	-[3]	23,7	25,7	-[3]
			FBC-40/22	8.8	-[3]	23,5	24,8	26,8	-[3]
			FBC-N-40/22	8.8	-[3]	-[3]	-[3]	26,9	-[3]
			FBC-50/30	8.8	-[3]	27,7	29,0	31,0	33,3
			FBC-N-50/30	8.8	-[3]	-[3]	-[3]	31,5	33,9
			FBC-40/22	A4-70	-[3]	-[3]	24,7	26,7	-[3]
			FBC-50/30	A4-70	-[3]	-[3]	28,8	30,9	33,1

[1] In absence of other national regulations.

[2] Materials according to Annex A7, Table 6.

[3] No performance assessed.

The characteristic flexure resistance according to Table 26 is limited as follows:

$M^0_{Rk,s} \leq 0{,}5 \cdot N^0_{Rk,s,l} \cdot a$ ($N^0_{Rk,s,l}$ according to Annex C1, Table 10)
$M^0_{Rk,s} \leq 0{,}5 \cdot N_{Rk,s} \cdot a$ ($N_{Rk,s}$ according to Annex C5, Table 18)
a = Internal lever arm according to Table 26
T_s = Tension force acting on the channel lips
C_s = Compression force acting on the channel lips

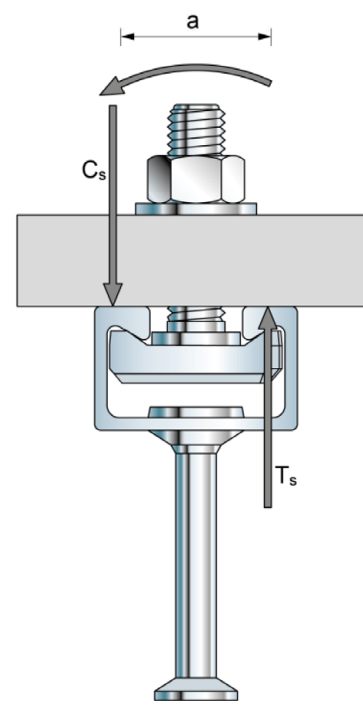

Table 27: Characteristic resistance under fire exposure – steel failure

Channel bolt thread diameter						M8	M10	M12	M16	M20
Steel failure:	**Anchor, connection between anchor and channel, local flexure of channel lips, channel bolts**									
Characteristic resistance under fire exposure	FES-H-S-29/2	FBC-S-29/20	R30 R60 R90 R120	$N_{Rk,s,fi}$ = $V_{Rk,s,fi}$	[kN]	- [2]	- [2]	2,5 2,4 1,7 1,4	- [2]	- [2]
	FES-H-S-38/23	FBC-S-38/23	R30 R60 R90 R120			- [2]	- [2]	- [2]	4,5 3,4 2,3 1,7	- [2]
	FES-H(-I)-40/22	FBC-40/22	R30 R60 R90 R120			- [2]	1,3 1,0 0,7 0,6	2,0 1,7 1,4 1,3	4,5 3,4 2,3 1,7	- [2]
	FES-H(-I)-50/30	FBC(-N)-50/30	R30 R60 R90 R120			- [2]	1,3 1,0 0,7 0,6	2,0 1,7 1,4 1,3	5,2 4,2 3,2 2,7	5,2 4,2 3,2 2,7
	FES-H(-I)-52/34	FBC(-N)-50/30	R30 R60 R90 R120			- [2]	1,3 1,0 0,7 0,6	2,0 1,7 1,4 1,3	5,2 4,2 3,2 2,7	8,0 6,5 5,0 4,2
	FES-C-28/15	FBC-28/15	R30 R60 R90 R120			0,6 0,6 0,5 0,4	1,3 1,0 0,7 0,6	1,3 1,0 0,7 0,6	- [2]	- [2]
	FES-C-38/17	FBC-38/17 FBC-S-38/23-M16	R30 R60 R90 R120			- [2]	1,3 1,0 0,7 0,6	1,3 1,0 0,7 0,6	3,5 2,8 1,8 1,3	- [2]
	FES-C-40/25	FBC-40/22	R30 R60 R90 R120			- [2]	1,8 1,5 1,1 0,8	3,0 2,4 1,7 1,4	3,5 2,8 1,8 1,3	- [2]
	FES-C-49/30	FBC-50/30	R30 R60 R90 R120			- [2]	1,3 1,0 0,7 0,6	2,9 2,4 1,8 1,6	3,1 2,5 1,9 1,6	3,1 2,5 1,9 1,6
	FES-C-54/33	FBC-50/30	R30 R60 R90 R120			- [2]	1,3 1,0 0,7 0,6	2,9 2,4 1,8 1,6	3,1 2,5 1,9 1,6	3,1 2,5 1,9 1,6
Partial factor				$\gamma_{Ms,fi}$ [1]	[-]	1,0				

[1] In absence of other national regulations.
[2] No performance assessed.

Table 28: Minimum axis distance under fire exposure

Anchor Channel FES-			C-28/15	C-38/17	H-S-29/20	H-S-38/23	C-40/25 H-40/22 H-40/22-P H-I-40/22	C-49/30 H50/30 H-50/30-P H-I-50/30	C-54/33 H-52/34 H-I-52/34
Minimum axis distance	R30	a [mm]	35	35	35	35	35	35	50
	R60		35	35	35	35	35	35	50
	R90		45	45	45	45	45	45	50
	R120		60	60	60	60	60	60	65

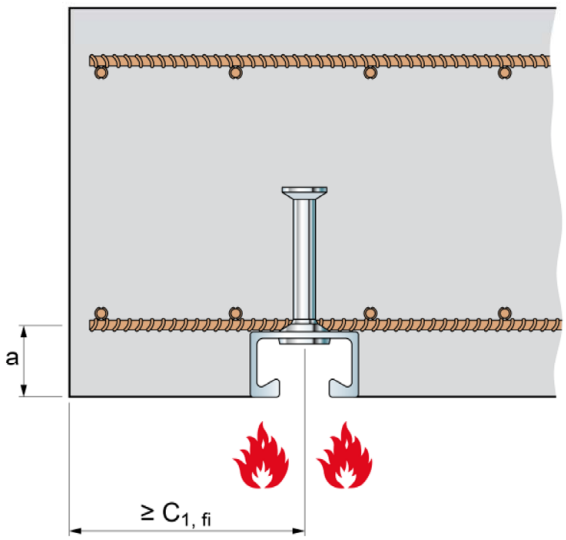

Fire exposure from one side only.

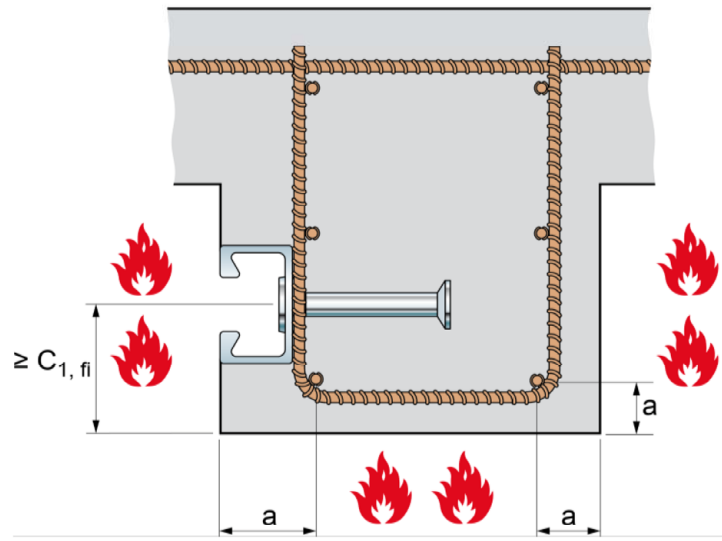

Fire exposure from more than one side.