DÉCLARATION DES PERFORMANCES

DoP 0349

pour le système d'injection fischer Superbond (fixation à scellement pour utilisation dans le béton) FR

1. Code d'identification unique du type de produit: **DoP 0349**

2. Usage(s) prévu(s): **Fixation dans du béton fissuré ou non fissuré, voir annexes, en particulier les annexes B1 - B17.**

3. Fabricant: **fischerwerke GmbH & Co. KG, Otto-Hahn-Straße 15, 79211 Denzlingen, Allemagne**

4. Mandataire: **–**

5. Système(s) d'évaluation et de vérification de la constance des performances: **1**

6. Document d'évaluation européen: **EAD 330499-01-0601, Edition 04/2020**
   Evaluation Technique Européenne: **ETA-12/0258; 2023-10-24**
   Organisme d'évaluation technique: **DIBt- Deutsches Institut für Bautechnik**
   Organisme(s) notifié(s): **2873 TU Darmstadt**

7. Performance(s) déclarée(s):
   Résistance mécanique et stabilité (BWR 1)
   Résistance caractéristique à la charge de traction (charge statique et quasi-statique):
   Résistance à la rupture de l'acier (charge de traction): Annexes C1 - C3
   Résistance à la rupture par extraction glissement: et rupture du cône béton: Annexes C4-C10
   Résistance à la rupture du cône béton: Annexe C4
   Distance au bord pour éviter la rupture par fendage sous charge: Annexe C4
   Robustesse: Annexes C4-C10
   Couple de serrage maxi: Annexes B4-B6,B8
   Distance au bord et entraxe mini: Annexes B4 - B8

   Résistance caractéristique à la charge de cisaillement (charge statique et quasi-statique):
   Résistance à la rupture de l'acier: Annexes C2, C3
   Résistance à la rupture par effet de levier: Annexe C4
   Résistance à la rupture du béton en bord de dalle: Annexe C4

   Déplacements sous charge à court et long terme:
   Déplacements sous charge à court et long terme: Annexes C11, C12

   Résistance caractéristique et déplacements pour les catégories de performance sismique C1 et C2:
   Résistance à la charge de traction, catégorie C1: Annexes C13 - C15
   Résistance à la charge de traction, catégorie C2: Annexes C13, C16
   Résistance à la charge de cisaillement, catégorie C1: Annexes C13, C14
   Résistance à la charge de cisaillement, catégorie C2: Annexes C13, C16
   Facteur espace annulaire: Annexe C13

   Hygiène, santé et environnement (BWR 3)
   Contenu, émission et/ou rejet de substances dangereuses: NPD

8. Documentation technique appropriée et/ou documentation technique spécifique: **–**

Les performances du produit identifié ci-dessus sont conformes aux performances déclarées. Conformément au règlement (UE) no 305/2011, la présente déclaration des performances est établie sous la seule responsabilité du fabricant mentionné ci-dessus.

Signé pour le fabricant et en son nom par:

Dr.-Ing. Oliver Geibig, Directeur Général Business Units & Ingénierie

Jürgen Grün, Directeur Général Chimie & Qualité

Tumlingen, 2023-11-07

Cette DoP a été préparée en plusieurs langues. En cas de différend relatif à l'interprétation, la version anglaise prévaudra.

L'annexe comprend des informations volontaires et complémentaires en langue anglaise dépassant les exigences légales (spécifiées de manière neutre).

Translation guidance Essential Characteristics and Performance Parameters for Annexes

Guide de traduction des caractéristiques essentielles et des paramètres de performance pour les annexes

Mechanical resistance and stability (BWR 1) **Résistance mécanique et stabilité (BWR 1)**			
Characteristic resistance to tension load (static and quasi-static loading): **Résistance caractéristique à la charge de traction (charge statique et quasi-statique):**			
1	Resistance to steel failure: **Résistance à la rupture de l'acier (charge de traction):**		$N_{Rk,s}$ [kN]
2	Resistance to combined pull- out and concrete cone failure: **Résistance à la rupture par extraction glissement: et rupture du cône béton:**		T_{Rk} and/or $T_{Rk,100}$ [N/mm^2], ψ^0_{sus} [-] (BF) $N_{Rk,p}$ and/or $N_{Rk,p,100}$ [kN] (BEF)
3	Resistance to concrete cone failure: **Résistance à la rupture du cône béton:**		$c_{cr,N}$ [mm], $k_{cr,N}$, $k_{ucr,N}$ [-]
4	Edge distance to prevent splitting under load: **Distance au bord pour éviter la rupture par fendage sous charge:**		$c_{cr,sp}$ [mm]
5	Robustness: **Robustesse:**		γ_{inst} [-]
6	Maximum installation torque: **Couple de serrage maxi:**		max T_{inst} [Nm] (BF)
	Installation torque: **Couple de serrage:**		T_{inst} [Nm] (BEF)
7	Minimum edge distance and spacing: **Distance au bord et entraxe mini:**		c_{min}, s_{min}, h_{min} [mm]
Characteristic resistance to shear load (static and quasi-static loading): **Résistance caractéristique à la charge de cisaillement (charge statique et quasi-statique):**			
8	Resistance to steel failure: **Résistance à la rupture de l'acier:**		$V^0_{Rk,s}$ [kN], $M^0_{Rk,s}$ [Nm], k_7 [-]
9	Resistance to pry-out failure: **Résistance à la rupture par effet de levier:**		k_8 [-]
10	Resistance to concrete edge failure: **Résistance à la rupture du béton en bord de dalle:**		d_{nom}, l_f [mm]
Displacements under short-term and long-term loading: **Déplacements sous charge à court et long terme:**			
11	Displacements under short-term and long-term loading: **Déplacements sous charge à court et long terme:**		δ_0, δ_∞ [mm or mm/(N/mm^2)]
Characteristic resistance and displacements for seismic performance categories C1 and C2: **Résistance caractéristique et déplacements pour les catégories de performance sismique C1 et C2:**			
12	Resistance to tension load, displacements:		
	Résistance à la charge de traction, catégorie C1:	C1	$N_{Rk,s,C1}$ [kN] (all) $\tau_{Rk,C1}$ [N/mm^2] (BF) $N_{Rk,p,C1}$ [kN] (BEF)
	Résistance à la charge de traction, catégorie C2:	C2	$N_{Rk,s,C2}$ [kN] (all) $\tau_{Rk,C2}$ [N/mm^2] (BF) $N_{Rk,p,C2}$ [kN] (BEF) $\delta_{N,C2}$ [mm] (all)
13	Resistance to shear load, displacements:		
	Résistance à la charge de cisaillement, catégorie C1:	C1	$V_{Rk,s,C1}$ [kN] (all)
	Résistance à la charge de cisaillement, catégorie C2:	C2	$V_{Rk,s,C2}$ [kN] (all) $\delta_{V,C2}$ [mm] (all)
14	Factor annular gap: **Facteur espace annulaire:**		α_{gap} [-]
Hygiene, health and the environment (BWR 3) **Hygiène, santé et environnement (BWR 3)**			
15	Content, emission and/or release of dangerous substances: **Contenu, émission et/ou rejet de substances dangereuses:**		-

Specific Part

1 Technical description of the product

The injection system fischer Superbond is a bonded anchor for use in concrete consisting of a cartridge with injection mortar fischer FIS SB or a resin capsule fischer RSB and a steel element according to Annex A 5.

The steel element is placed into a drilled hole filled with injection mortar and is anchored via the bond between metal part, injection mortar and concrete.

The resin capsule is placed into a drilled hole and the steel element is driven by rotary hammer drill or tangential impact screw driver or cordless drill screw driver. The anchor rod is anchored via the bond between steel element, chemical mortar and concrete.

The product description is given in Annex A.

2 Specification of the intended use in accordance with the applicable European Assessment Document

The performances given in Section 3 are only valid if the anchor is used in compliance with the specifications and conditions given in Annex B.

The verifications and assessment methods on which this European Technical Assessment is based lead to the assumption of a working life of the anchor of at least 50 years. The indications given on the working life cannot be interpreted as a guarantee given by the producer, but are to be regarded only as a means for choosing the right products in relation to the expected economically reasonable working life of the works.

3 Performance of the product and references to the methods used for its assessment

3.1 Mechanical resistance and stability (BWR 1)

Essential characteristic	Performance
Characteristic resistance to tension load (static and quasi-static loading)	See Annex B 4 to B 8, C 1 to C 10
Characteristic resistance to shear load (static and quasi-static loading)	See Annex C 1 to C 4
Displacements under short-term and long-term loading	See Annex C 11 and C 12
Characteristic resistance and displacements for seismic performance categories C1 and C2	See Annex C 13 to C 16

3.2 Hygiene, health and the environment (BWR 3)

Essential characteristic	Performance
Content, emission and/or release of dangerous substances	No performance assessed

4 Assessment and verification of constancy of performance (AVCP) system applied, with reference to its legal base

In accordance with the European Assessment Document EAD 330499-01-0601 the applicable European legal act is: [96/582/EC].

The system to be applied is: 1

Installation conditions part 1

anchor rod or fischer anchor rod RG M with fischer injection system FIS SB

Pre-positioned installation

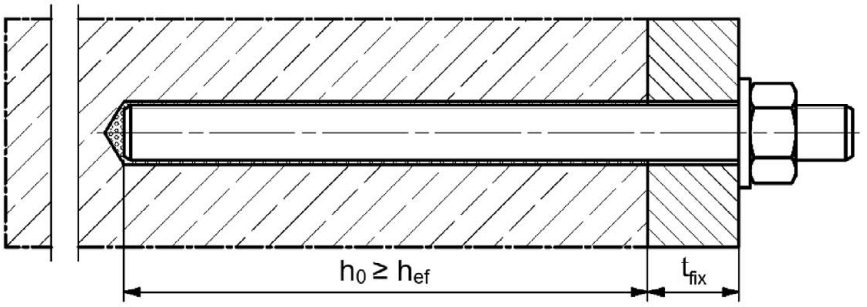

Push through installation (annular gap filled with mortar)

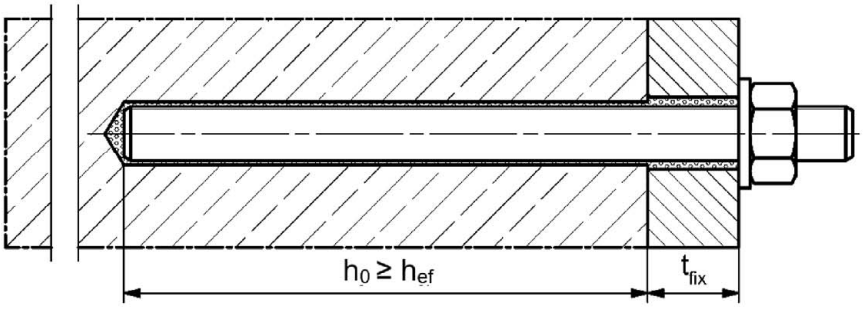

Pre-positioned or push through installation with subsequently injected fischer filling disk
(annular gap filled with mortar)

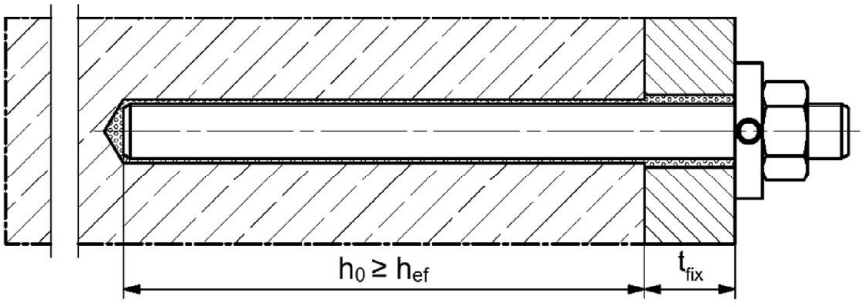

Figures not to scale

h_0 = drill hole depth

h_{ef} = effective embedment depth

t_{fix} = thickness of fixture

fischer Superbond

Product description
Installation conditions part 1

Annex A 1

Installation conditions part 2

Reinforcing bar with fischer injection system FIS SB

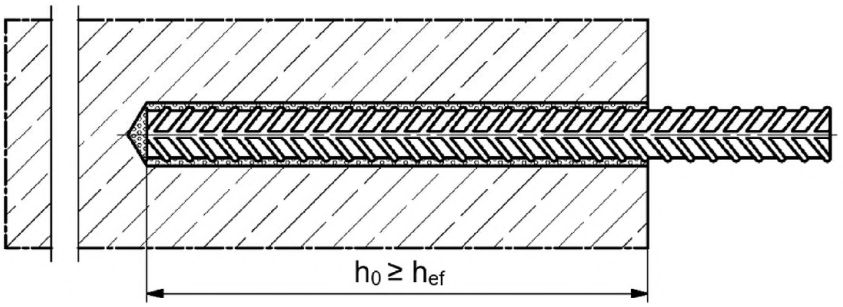

fischer rebar anchor FRA with fischer injection system FIS SB

Pre-positioned installation

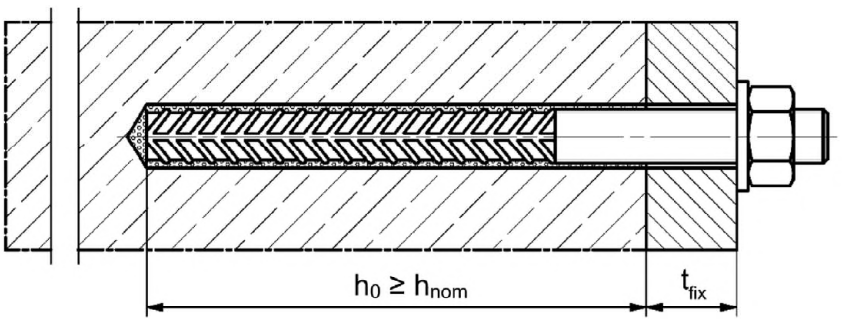

Push through installation (annular gap filled with mortar)

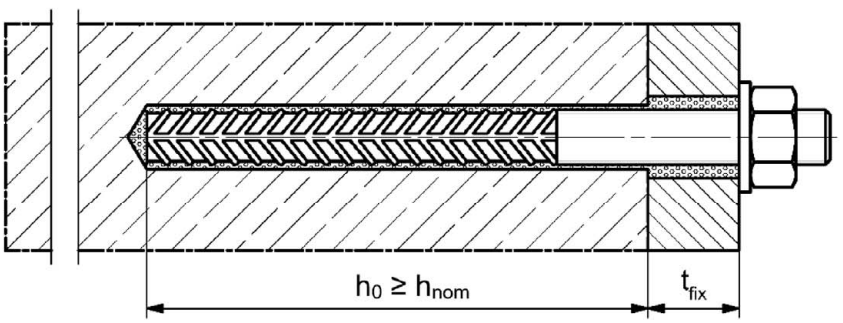

Figures not to scale

h_0	= drill hole depth	h_{ef}	= effective embedment depth
t_{fix}	= thickness of fixture	h_{nom}	= overall fastener embedment depth in the concrete

Installation conditions part 3

fischer internal threaded anchor RG M I with fischer resin capsule system RSB or fischer injection system FIS SB

Pre-positioned installation

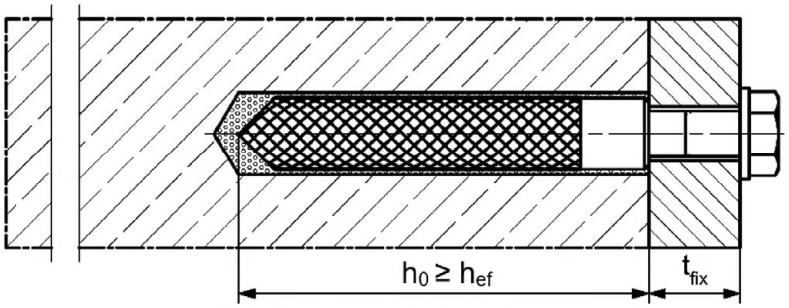

Pre-positioned installation with subsequently injected fischer filling disk (annular gap filled with mortar)

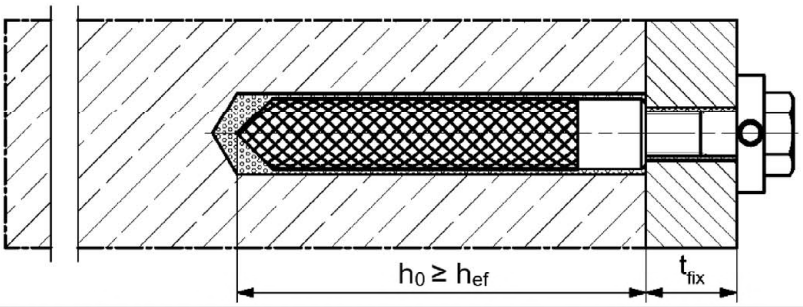

fischer anchor rod RG M with fischer resin capsule system RSB

Pre-positioned installation

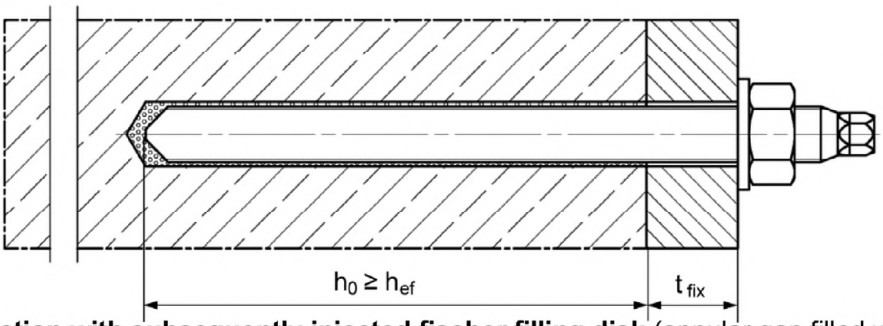

Pre-positioned installation with subsequently injected fischer filling disk (annular gap filled with mortar)

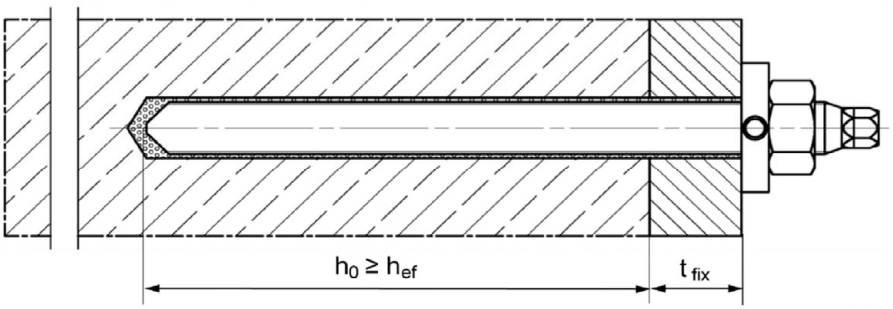

Figures not to scale

h_0 = drill hole depth

h_{ef} = effective embedment depth

t_{fix} = thickness of fixture

fischer Superbond

Product description
Installation conditions part 3

Annex A 3

Overview system components Part 1

Injection cartridge (shuttle cartridge) with sealing cap; Size: 390 ml, 585 ml, 1500 ml

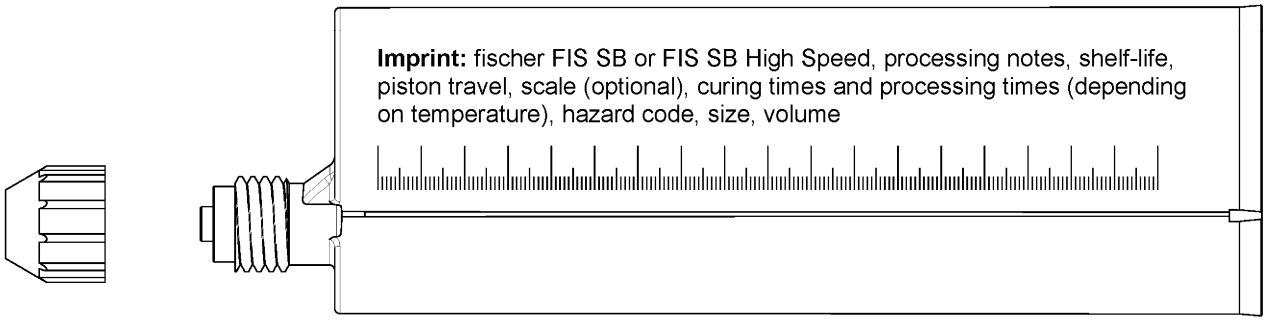

Resin capsule

Sizes: 8, 10 mini, 10, 12 mini, 12, 16 mini, 16, 16 E, 20, 20 E / 24, 30

Static mixer FIS MR Plus for Injection cartridge 390 ml

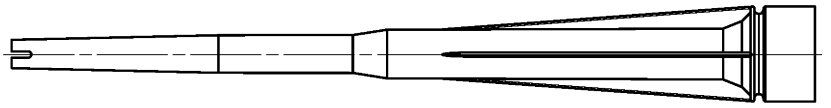

Static mixer FIS UMR Injection cartridges ≥ 585 ml

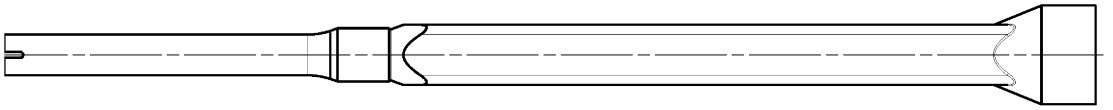

Injection adapter and extension tube Ø 9 for static mixer FIS MR Plus;
Injection adapter and extension tube Ø 9 or Ø 15 for static mixer FIS UMR

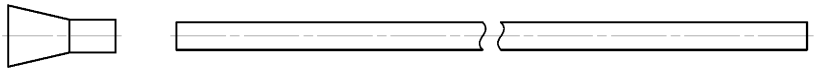

Figures not to scale

Overview system components Part 2

anchor rod

Sizes: M8, M10, M12, M16, M20, M24, M27, M30

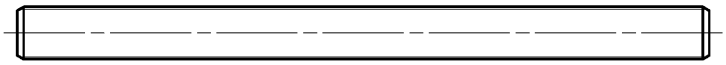

fischer anchor rod RG M

Sizes: M8, M10, M12, M16, M20, M24, M30

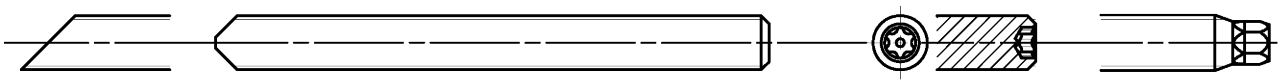

fischer internal threaded anchor RG M I

Size: M8, M10, M12, M16, M20

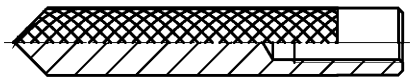

Screw / threaded rod / washer / hexagon nut

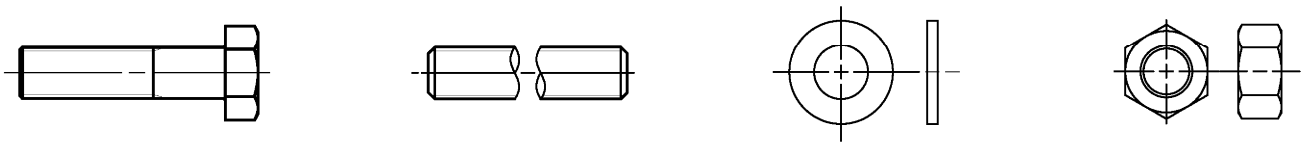

fischer filling disc with injection adapter

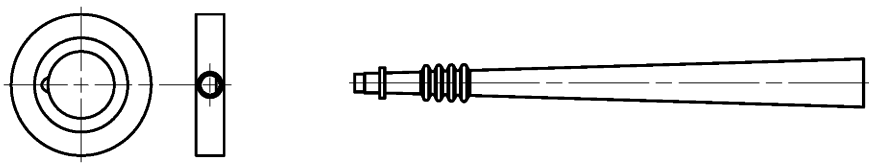

Reinforcing bar

Nominal diameters: ϕ8, ϕ10, ϕ12, ϕ14, ϕ16, ϕ20, ϕ25, ϕ28, ϕ32

fischer rebar anchor FRA

Sizes: M12, M16, M20, M24

Figures not to scale

fischer Superbond

System description
Overview system components part 2;
steel components, injection adapter

Annex A 5

Overview system components Part 3

Cleaning brush BS

Blow-out pump AB G

Compressed-air cleaning tool ABP

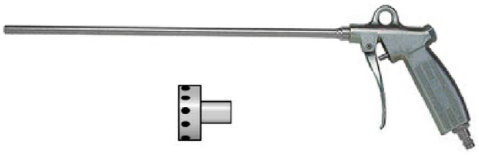

Figures not to scale

fischer Superbond

System description
Overview system components part 3;
cleaning brush / blow-out pump

Annex A 6

Table A7.1: Materials

Part	Designation	Material		
1	Injection cartridge	Mortar, hardener, filler		
	Steel grade	Steel	Stainless steel R	High corrosion resistant steel HCR [2)]
		zinc plated	acc. to EN 10088-1:2014 Corrosion resistance class CRC III acc. to EN 1993-1-4:2006+A1:2015	acc. to EN 10088-1:2014 Corrosion resistance class CRC V acc. to EN 1993-1-4:2006+A1:2015
2	Anchor rod	Property class 4.8, 5.8 or 8.8; EN ISO 898-1:2013 zinc plated ≥ 5 µm, EN ISO 4042:2022/Zn5/An(A2K) or hot dip galvanised ≥ 40 µm EN ISO 10684:2004 f_{uk} ≤ 1000 N/mm² A_5 > 12% fracture elongation	Property class 50, 70 or 80 EN ISO 3506-1:2020 1.4401; 1.4404; 1.4578; 1.4571; 1.4439; 1.4362; 1.4062, 1.4662, 1.4462; EN 10088-1:2014 f_{uk} ≤ 1000 N/mm² A_5 > 12% fracture elongation	Property class 50 or 80 EN ISO 3506-1:2020 or property class 70 with f_{yk}= 560 N/mm² 1.4565; 1.4529; EN 10088-1:2014 f_{uk} ≤ 1000 N/mm² A_5 > 12% fracture elongation
		Fracture elongation A_5 > 8 %, for applications without requirements for seismic performance category C2		
3	Washer ISO 7089:2000	zinc plated ≥ 5 µm, EN ISO 4042:2022/Zn5/An(A2K), or hot dip galvanised ≥ 40 µm EN ISO 10684:2004	1.4401; 1.4404; 1.4578;1.4571; 1.4439; 1.4362; EN 10088-1:2014	1.4565; 1.4529; EN 10088-1:2014
4	Hexagon nut	Property class 4, 5 or 8; EN ISO 898-2:2012 zinc plated ≥ 5 µm, EN ISO 4042:2022/Zn5/An(A2K), or hot dip galvanised ≥ 40 µm EN ISO 10684:2004	Property class 50, 70 or 80 EN ISO 3506-2:2020 1.4401; 1.4404; 1.4578; 1.4571; 1.4439; 1.4362; EN 10088-1:2014	Property class 50, 70 or 80 EN ISO 3506-2:2020 1.4565; 1.4529 EN 10088-1:2014
5	fischer internal threaded anchor RG M I	Property class 5.8 ISO 898-1:2013 zinc plated ≥ 5 µm, EN ISO 4042:2022/Zn5/An(A2K)	Property class 70 EN ISO 3506-1:2020 1.4401; 1.4404; 1.4578; 1.4571; 1.4439; 1.4362; EN 10088-1:2014	Property class 70 EN ISO 3506-1:2020 1.4565; 1.4529; EN 10088-1:2014
6	Commercial standard screw or threaded rod for fischer internal threaded anchor RG M I	Property class 5.8 or 8.8; EN ISO 898-1:2013 zinc plated ≥ 5 µm, EN ISO 4042:2022/Zn5/An(A2K) A_5 > 8 % fracture elongation	Property class 70 EN ISO 3506-1:2020 1.4401; 1.4404; 1.4578; 1.4571; 1.4439; 1.4362; EN 10088-1:2014 A_5 > 8 % fracture elongation	Property class 70 EN ISO 3506-1:2020 1.4565; 1.4529; EN 10088-1:2014 A_5 > 8 % fracture elongation
7	fischer filling disk similar to DIN 6319-G	zinc plated ≥ 5 µm, EN ISO 4042:2022/Zn5/An(A2K) or hot dip galvanised ≥ 40 µm EN ISO 10684:2004	1.4401; 1.4404; 1.4578; 1.4571; 1.4439; 1.4362; EN 10088-1:2014	1.4565;1.4529; EN 10088-1:2014
8	Reinforcing bar EN 1992-1-1:2004 and AC:2010, Annex C	Bars and de-coiled rods, class B or C with f_{yk} and k according to NDP or NCI according to EN 1992-1-1/NA $f_{uk} = f_{tk} = k \cdot f_{yk}$ (A_5 > 8%)		
9	fischer rebar anchor FRA	Rebar part: Bars and de-coiled rods class B or C with f_{yk} and k according to NDP or NCI of EN 1992-1-1:2004+AC:2010 / $f_{uk} = f_{tk} = k \cdot f_{yk}$ (A_5 > 8%) Threaded part: Property class 80 EN ISO 3506-1:2020	1.4401, 1.4404, 1.4571, 1.4578, 1.4439, 1.4362, 1.4062 acc. to EN 10088-1:2014 Corrosion resistance class CRC III acc. to EN 1993-1-4:2006+A1:2015 1.4565; 1.4529 acc. to EN 10088-1:2014 Corrosion resistance class CRC V acc. to EN 1993-1-4: 2006+A1:2015 f_{uk} ≤ 1000 N/mm²; (A_5 > 8%)	

Specifications of intended use part 1

Table B1.1: Overview use and performance categories, **injection mortar system FIS SB**

Anchorages subject to		**FIS SB with …**							
		Anchor rod		fischer internal threaded anchor RG M I		Reinforcing bar		fischer rebar anchor FRA	
Hammer drilling with standard drill bit		all sizes							
Hammer drilling with hollow drill bit (fischer "FHD", Heller "Duster Expert"; Bosch „Speed Clean"; Hilti "TE-CD, TE-YD", DreBo „D-Plus", DreBo „D-Max")		Nominal drill bit diameter (d_0) 12 mm to 35 mm							
Diamond drilling		-[1]							
Static and quasi static loading, in	uncracked concrete	all sizes	Tables: C1.1 C4.1 C5.1 C11.1	all sizes	Tables: C2.1 C4.1 C7.1 C11.2	all sizes	Tables: C3.1 C4.1 C9.1 C12.1	all sizes	Tables: C3.2 C4.1 C10.1 C12.2
	cracked concrete								
Seismic performance category (only hammer drilling with standard / hollow drill bits)	C1	all sizes	Tables: C13.1 C14.2 C15.1	-[1]		all sizes	Tables: C14.1 C14.2 C15.2	-[1]	
	C2	M12 M16 M20 M24	Tables: C13.1 C14.2 C16.1			-[1]	-[1]		
Use category	I1 dry or wet concrete	all sizes							
	I2 water filled hole	-[1]							
Installation direction		D3 (downward and horizontal and upwards (e.g., overhead))							
Installation method		pre-positioned or push through installation							
Installation temperature		FIS SB: $T_{i,min}$ = -15 °C to $T_{i,max}$ = +40 °C FIS SB High Speed: $T_{i,min}$ = -20 °C to $T_{i,max}$ = +40 °C							
Service temperature	Temperature range I	-40 °C to +40 °C	T_{st} = +40 °C / T_{lt} = +24 °C						
	Temperature range II	-40 °C to +80 °C	T_{st} = +80 °C / T_{lt} = +50 °C						
	Temperature range III	-40 °C to +120 °C	T_{st} = +120 °C / T_{lt} = +72 °C						
	Temperature range IV	-40 °C to +150 °C	T_{st} = +150 °C / T_{lt} = +90 °C						

[1] No performance assessed.

Specifications of intended use part 2

Table B2.1: Overview use and performance categories, **resin capsule system RSB**

Anchorages subject to			**RSB with …**			
			fischer anchor rod RG M 		fischer internal threaded anchor RG MI 	
Hammer drilling with standard drill bit			all sizes			
Hammer drilling with hollow drill bit (fischer "FHD", Heller "Duster Expert"; Bosch „Speed Clean"; Hilti "TE-CD, TE-YD", DreBo „D-Plus", DreBo „D-Max") 			Nominal drill bit diameter (d_0) 12 mm to 35 mm		all sizes	
Diamond drilling 			all sizes [1]			
Static and quasi static loading, in	uncracked concrete		all sizes	Tables: C1.1 C4.1 C6.1 C11.1	all sizes	Tables: C2.1 C4.1 C8.1 C11.2
	cracked concrete		all sizes [1]		all sizes [1]	
Seismic performance category (only hammer drilling with standard / hollow drill bits)	C1		all sizes	Tables: C13.1 C14.2 C15.1	-[2]	
	C2		-[2]			
Use category	I1	dry or wet concrete	all sizes			
	I2	water filled hole	all sizes			
Installation direction			D3 (downward and horizontal and upwards (e.g. overhead))			
Installation method			only pre-positioned installation			
Installation temperature			$T_{i,min}$ = -30 °C to $T_{i,max}$ = +40 °C			
Service temperature	Temperature range I		-40 °C to +40 °C	T_{st} = +40 °C / T_{lt} = +24 °C		
	Temperature range II		-40 °C to +80 °C	T_{st} = +80 °C / T_{lt} = +50 °C		
	Temperature range III		-40 °C to +120 °C	T_{st} = +120 °C / T_{lt} = +72 °C		
	Temperature range IV		-40 °C to +150 °C	T_{st} = +150 °C / T_{lt} = +90 °C		

[1] For diamond drilling in cracked concrete only nominal drill bit diameters (d_0) ≥ 18 mm are permitted.
[2] No performance assessed.

Specifications of intended use part 3

Base materials:

- Compacted reinforced or unreinforced normal weight concrete without fibres of strength classes C20/25 to C50/60 according to EN 206:2013+A1:2016

Use conditions (Environmental conditions):

- Structures subject to dry internal conditions
  (zinc coated steel, stainless steel or high corrosion resistant steel).
- For all other conditions according to EN1993-1-4:2006+A1:2015 corresponding to corrosion resistance classes to Annex A 7 Table A7.1.

Design:

- Fastenings have to be designed by a responsible engineer with experience of concrete anchor design.
- Verifiable calculation notes and drawings are to be prepared taking account of the loads to be anchored. The position of the anchor is indicated on the design drawings (e. g. position of the anchor relative to reinforcement or to supports, etc.).
- Fastenings are designed in accordance with:
  EN 1992-4:2018 and EOTA Technical Report TR 055, Edition February 2018.

Installation:

- Fastener installation is to be carried out by appropriately qualified personnel and under the supervision of the person responsible for technical matters of the site.
- In case of aborted hole: The hole shall be filled with mortar.
- Fastening depth should be marked and adhered to on installation.
- Overhead installation is allowed (necessary equipment see installation instruction).

Table B4.1: Installation parameters for **anchor rods** in combination with **injection mortar system FIS SB**

Anchor rods		Thread	M8	M10	M12	M16	M20	M24	M27	M30
Nominal drill hole diameter	d_0		10	12	14	18	24	28	30	35
Drill hole depth	h_0		$h_0 \geq h_{ef}$							
Effective embedment depth	$h_{ef,\,min}$		60	60	70	80	90	96	108	120
	$h_{ef,\,max}$		160	200	240	320	400	480	540	600
Minimum spacing and minimum edge distance	s_{min} = c_{min}	[mm]	40	45	55	65	85	105	120	140
Diameter of the clearance hole of the fixture – pre-positioned installation	d_f		9	12	14	18	22	26	30	33
Diameter of the clearance hole of the fixture – push through installation	d_f		11	14	16	20	26	30	33	40
Min. thickness of concrete member	h_{min}		h_{ef} + 30 (≥ 100)			$h_{ef} + 2d_0$				
Maximum setting torque	max T_{inst}	[Nm]	10	20	40	60	120	150	200	300

fischer anchor rod

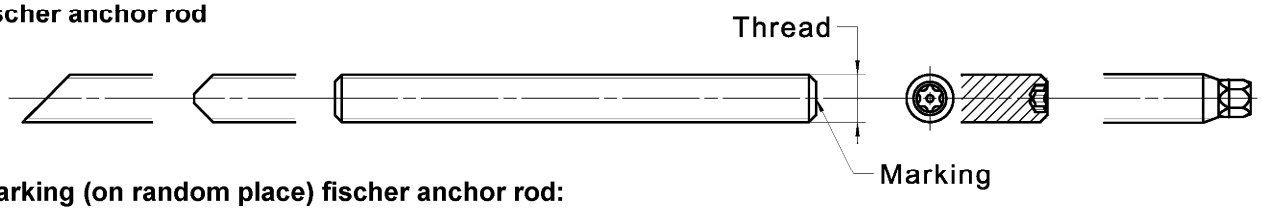

Marking (on random place) fischer anchor rod:

Steel zinc plated PC[1] 8.8	● or +	Steel hot-dip PC[1] 8.8	●
High corrosion resistant steel HCR PC[1] 50	●	High corrosion resistant steel HCR PC[1] 70	-
High corrosion resistant steel HCR PC[1] 80	(	Stainless steel R property class 50	~
Stainless steel R property class 80[1]	*		
Alternatively: Colour coding according to DIN 976-1: 2016			

[1] PC = property class

Installation conditions:

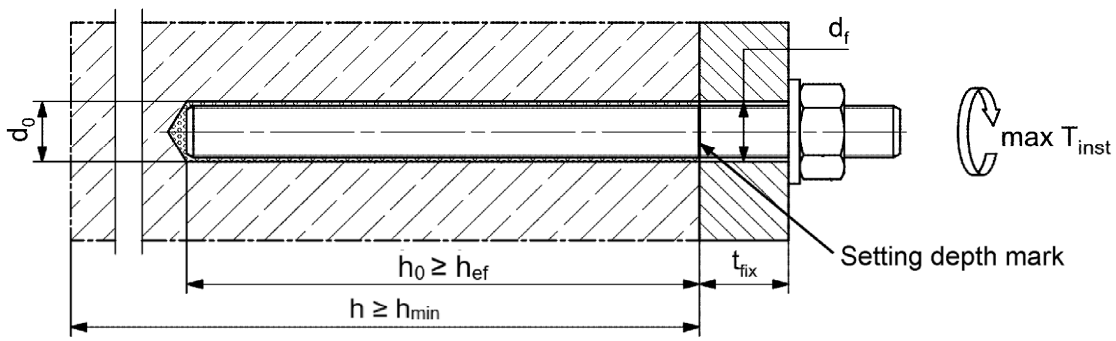

Commercial standard threaded rods, washers and hexagon nuts may also be used if the following requirements are fulfilled:

- Materials, dimensions and mechanical properties according to **Annex A 7, Table A7.1**.
- Inspection certificate 3.1 according to EN 10204:2004, the documents have to be stored.
- Setting depth is marked.

Figures not to scale

Table B5.1: Installation parameters for **fischer anchor rods RG M** in combination with **resin capsule system RSB**

Anchor rod RG M		Thread	M8	M10	M12	M16	M20	M24	M30
Nominal drill hole diameter	d_0	[mm]	10	12	14	18	25	28	35
Drill hole depth	h_0		$h_0 \geq h_{ef}$						
Effective embedment depth	$h_{ef,1}$		---	75	75	95	---	---	---
	$h_{ef,2}$		80	90	110	125	170	210	280
	$h_{ef,3}$		---	150	150	190	210	---	---
Minimum spacing and minimum edge distance	s_{min} = c_{min}		40	45	55	65	85	105	140
Diameter of the clearance hole of the fixture pre-positioned installation	d_f		9	12	14	18	22	26	33
Min. thickness of concrete member	h_{min}		h_{ef} + 30 (≥ 100)			$h_{ef} + 2d_0$			
Maximum setting torque	max T_{inst}	[Nm]	10	20	40	60	120	150	300

fischer anchor rod RG M

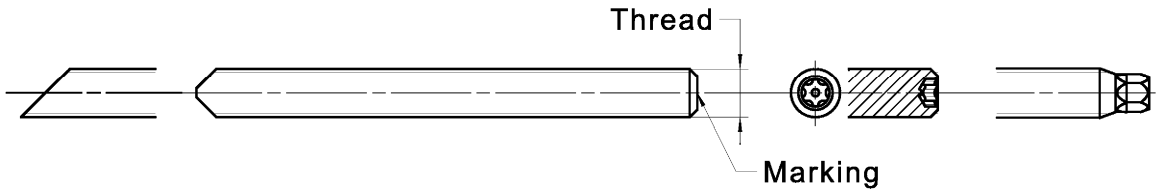

Marking (on random place) fischer anchor rod RG M:

Steel zinc plated PC[1)] 8.8	• or +	Steel hot-dip PC[1)] 8.8	•
High corrosion resistant steel HCR PC[1)] 50	•	High corrosion resistant steel HCR PC[1)] 70	-
High corrosion resistant steel HCR PC[1)] 80	(	Stainless steel R property class 50	~
Stainless steel R property class 80	*		

Alternatively: Colour coding according to DIN 976-1:2016

[1)] PC = property class

Installation conditions:

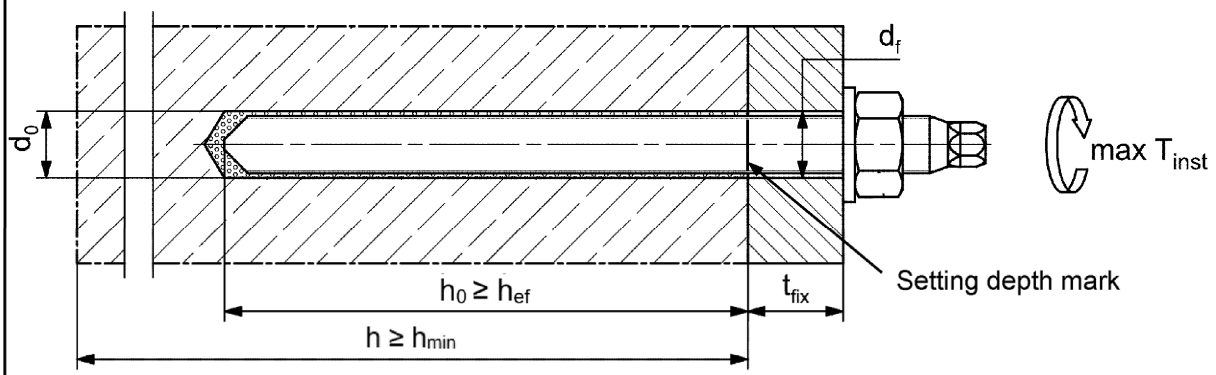

Figures not to scale

fischer Superbond

Intended use
Installation parameters for fischer anchor rods RG M in combination with resin capsule system RSB

Annex B 5

Table B6.1: Installation parameters for **fischer internal threaded anchors RG M I**

Internal threaded anchor RG M I		Thread	M8	M10	M12	M16	M20
Sleeve diameter	$d_{nom} = d_H$	[mm]	12	16	18	22	28
Nominal drill hole diameter	d_0		14	18	20	24	32
Drill hole depth	h_0		$h_0 \geq h_{ef} = L_H$				
Effective embedment depth ($h_{ef} = L_H$)	h_{ef}		90	90	125	160	200
Minimum spacing and minimum edge distance	s_{min} = c_{min}		55	65	75	95	125
Diameter of clearance hole in the fixture	d_f		9	12	14	18	22
Minimum thickness of concrete member	h_{min}		120	125	165	205	260
Maximum screw-in depth	$l_{E,max}$		18	23	26	35	45
Minimum screw-in depth	$l_{E,min}$		8	10	12	16	20
Maximum installation torque	max T_{inst}	[Nm]	10	20	40	80	120

fischer internal threaded anchor RG M I

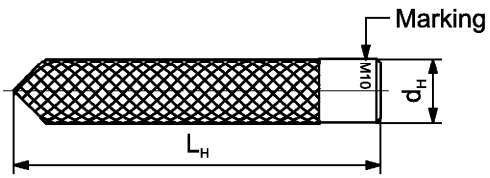

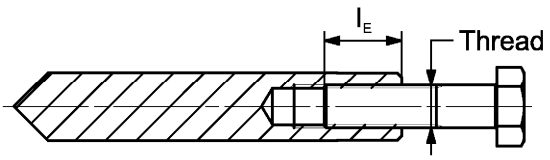

Marking: Anchor size e. g.: **M10**
Stainless steel → additional R; e.g.: **M10 R**
High corrosion resistant steel R→ additional C; e.g.: **M10 HCR**

Retaining bolt or threaded rods (including nut and washer) must comply with the appropriate material and strength class of **Annex A 7**, **Table A7.1**.

Installation conditions:

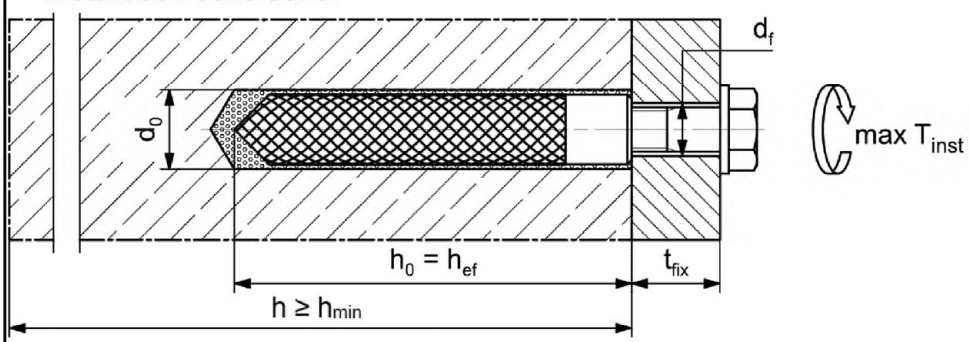

Figures not to scale

Table B7.1: Installation parameters for **reinforcing bars**

Nominal diameter of the bar		**ϕ**	**8[1)]**	**10[1)]**	**12[1)]**	**14**	**16**	**20**	**25**	**28**	**32**
Nominal drill hole diameter	d_0	[mm]	10 / 12	12 / 14	14 / 16	18	20	25	30	35	40
Drill hole depth	h_0		$h_0 \geq h_{ef}$								
Effective embedment depth	$h_{ef,min}$		60	60	70	75	80	90	100	112	128
	$h_{ef,max}$		160	200	240	280	320	400	500	560	640
Minimum spacing and minimum edge distance	s_{min} = c_{min}		40	45	55	60	65	85	110	130	160
Minimum thickness of concrete member	h_{min}		h_{ef} + 30 (≥ 100)			$h_{ef} + 2d_0$					

[1)] Both drill hole diameters can be used

Reinforcing bar

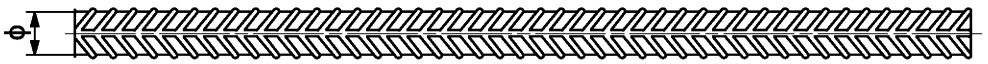

- The minimum value of related rib area $f_{R,min}$ must fulfil the requirements of EN 1992-1-1:2004+AC:2010
- The rib height must be within the range: $0{,}05 \cdot \phi \leq h_{rib} \leq 0{,}07 \cdot \phi$
  (ϕ = Nominal diameter of the bar, h_{rib} = rib height)

Installation conditions:

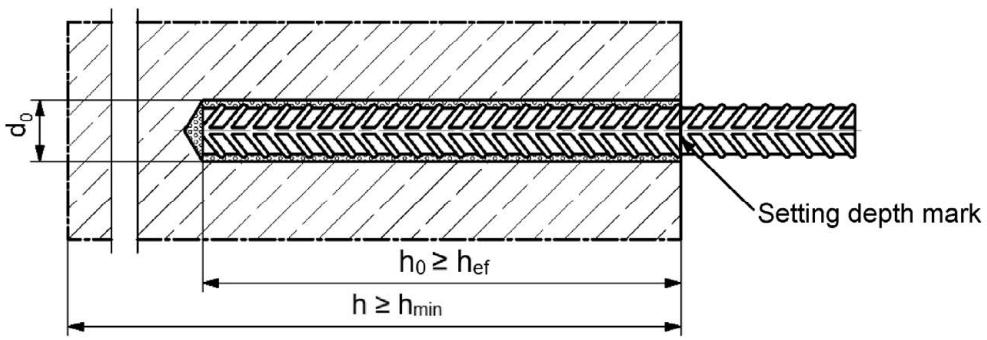

Figures not to scale

Table B8.1: Installation parameters for **fischer rebar anchor FRA**

Rebar anchor FRA		Thread	M12[1)]		M16	M20	M24
Nominal diameter of the bar	ϕ	[mm]	12		16	20	25
Nominal drill hole diameter	d_0		14	16	20	25	30
Drill hole depth	h_0		$h_{ef} + l_e$				
Effective embedment depth	$h_{ef,min}$		70		80	90	96
	$h_{ef,max}$		140		220	300	380
Distance concrete surface to welded joint	l_e		100				
Minimum spacing and minimum edge distance	s_{min} = c_{min}		55		65	85	105
Diameter of clearance hole in the fixture – pre-positioned anchorage	$\leq d_f$		14		18	22	26
Diameter of clearance hole in the fixture – push through anchorage	$\leq d_f$		18		22	26	32
Minimum thickness of concrete member	h_{min}		$h_0 + 30$ (≥ 100)	$h_0 + 2d_0$			
Maximum installation torque	max T_{inst}	[Nm]	40		60	120	150

[1)] Both drill hole diameters can be used

fischer rebar anchor FRA

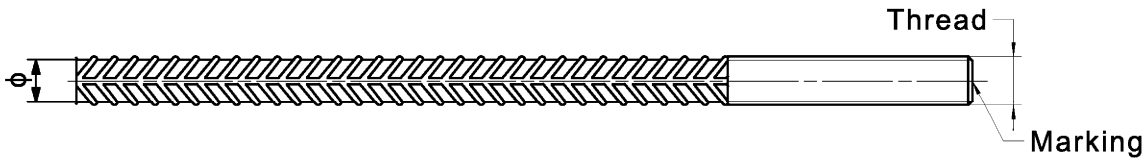

Marking frontal e. g: FRA (for stainless steel);
FRA HCR (for high corrosion resistant steel)

Installation conditions:

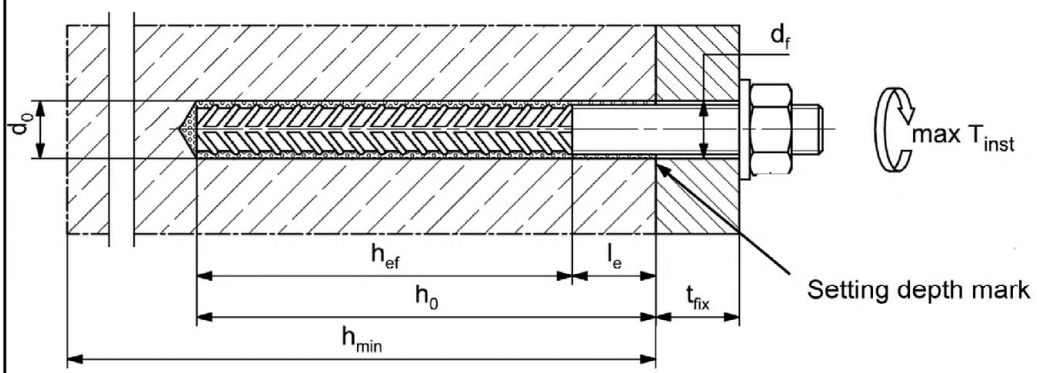

Figures not to scale

fischer Superbond

Intended use
Installation parameters rebar anchor FRA

Annex B 8

Table B9.1: Dimension of **resin capsule RSB**

Resin capsule RSB			**RSB 8**	**RSB 10 mini**	**RSB 10**	**RSB 12 mini**	**RSB 12**	**RSB 16 mini**	**RSB 16**	**RSB 16 E**	**RSB 20**	**RSB 20 E / 24**	**RSB 30**
Capsule diameter	d_P	[mm]	9,0	10,5		12,5		16,5			23,0		27,5
Capsule length	L_P	[mm]	85	72	90	72	97	72	95	123	160	190	260

Table B9.2: Assignment of **resin capsule RSB** to **fischer anchor rod RG M**

Anchor rod RG M			**M8**	**M10**	**M12**	**M16**	**M20**	**M24**	**M30**
Effective embedment depth	$h_{ef,1}$	[mm]	---	75	75	95	---	---	---
Related capsule RSB		[-]	---	10 mini	12 mini	16 mini	---	---	---
Effective embedment depth	$h_{ef,2}$	[mm]	80	90	110	125	170	210	280
Related capsule RSB		[-]	8	10	12	16	20	20 E/ 24	30
Effective embedment depth	$h_{ef,3}$	[mm]	---	150	150	190	210	---	---
Related capsule RSB		[-]	---	2 x 10 mini	2 x 12 mini	2 x 16 mini	20 E / 24	---	---

Table B9.3: Assignment of **resin capsule RSB** to **fischer internal threaded anchor RG M I**

Internal threaded anchor RG M I			**M8**	**M10**	**M12**	**M16**	**M20**
Effective embedment depth	h_{ef}	[mm]	90	90	125	160	200
Related capsule RSB		[-]	10	12	16	16 E	20 E / 24

Table B10.1: Combined setting methods for **resin capsule RSB** with **fischer anchor rod RG M**

Anchor rod RG M	Minimum temperature at anchoring base [°C]	Minimum temperature of the resin capsule [°C]	**M8**	**M10**	**M12**	**M16**	**M20**	**M24**	**M30**
Rotary hammer	-30	-15	✓	✓	✓	✓	✓	✓	✓
Tangential impact screw driver	-10	-10	-	✓	✓	✓	-	-	-
Cordless drill screw driver	-10	5	✓	✓	✓	✓	-	-	-

Table B10.2: Combined setting methods for **resin capsule RSB** with **fischer internal threaded anchor RG M I**

fischer internal threaded anchor RG M I	Minimum temperature at anchoring base [°C]	Minimum temperature of the resin capsule [°C]	**M8**	**M10**	**M12**	**M16**	**M20**
Rotary hammer	-30	-15	✓	✓	✓	✓	✓
Tangential impact screw driver	-10	-10	✓	✓	✓	-	-
Cordless drill screw driver	-10	5	✓	✓	✓	-	-

Table B11.1: Parameters of the cleaning brush BS (steel brush with steel bristles)

The size of the cleaning brush refers to the drill hole diameter

Nominal drill hole diameter	d_0	[mm]	10	12	14	16	18	20	24	25	28	30	32	35	40
Steel brush diameter BS	d_b		11	14	16	20		25	26	27	30	40			-
Steel brush diameter BSB	d_b		-	-	-	-		-	-	-	-	-			42

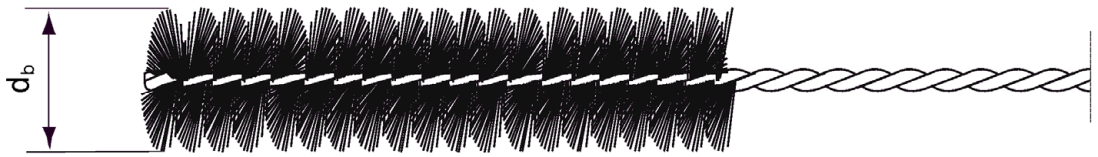

Table B11.2: Conditions for use **static mixer** without an **extension tube**

Nominal drill hole diameter	d_0	[mm]	10	12	14	16	18	20	24	25	28	30	35	40
Drill hole depth h_0 by using	FIS MR Plus		≤ 90		≤ 120	≤ 140	≤ 150	≤ 160	≤ 190	≤ 210				
	FIS UMR		-	-	≤ 90	≤ 160	≤ 180	≤ 190	≤ 220		≤ 250			

Table B11.3: Maximum **processing time** of the mortar and minimum **curing time** (During the curing time of the mortar the concrete temperature may not fall below the listed minimum temperature. Minimal cartridge temperature +5 °C; minimal resin capsule temperature -15 °C)

Temperature at anchoring base [°C]	Maximum processing time t_{work}		Minimum curing time t_{cure}		
	FIS SB	FIS SB High Speed	FIS SB	FIS SB High Speed	RSB
-30 to -20	---	---	---	---	120 h
> -20 to -15	---	60 min	---	24 h	48 h
> -15 to -10	60 min	30 min	36 h	8 h	30 h
> -10 to -5	30 min	15 min	24 h	3 h	16 h
> -5 to 0	20 min	10 min	8 h	2 h	10 h
> 0 to 5	13 min	5 min	4 h	1 h	45 min
> 5 to 10	9 min	3 min	2 h	45 min	30 min
> 10 to 20	5 min	2 min	1 h	30 min	20 min
> 20 to 30	4 min	1 min	45 min	15 min	5 min
> 30 to 40	2 min	---	30 min	---	3 min

Figures not to scale

Installation instructions part 1; Injection mortar system FIS SB

Drilling and cleaning the hole (hammer drilling with standard drill bit)

1	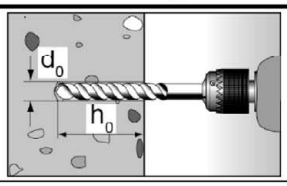	Drill the hole. Nominal drill hole diameter $\mathbf{d_0}$ and drill hole depth $\mathbf{h_0}$ see **Tables B4.1, B6.1, B7.1, B8.1**.
2	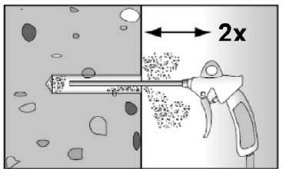	Clean the drill hole: Blow out the drill hole twice, with oil free compressed air (p ≥ 6 bar) In uncracked concrete the use of the manual blow-out pump ABG is possible (Installation parameters: d_0 < 18 mm and h_{ef} < 10d) 
3	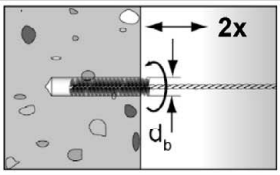	Brush the drill hole twice. For drill hole diameter ≥ 30 mm use a power drill. For deep holes use an extension. Corresponding brushes see **Table B11.1**.
4	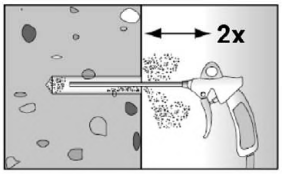	Clean the drill hole: Blow out the drill hole twice, with oil free compressed air (p ≥ 6 bar) In uncracked concrete the use of the manual blow-out pump ABG is possible (Installation parameters: d_0 < 18 mm and h_{ef} < 10d) 

Go to step 5 (Annex B 12)

Drilling and cleaning the hole (hammer drilling with hollow drill bit)

1	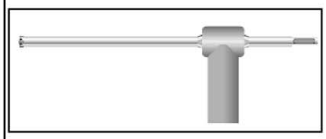	Check a suitable hollow drill (see **Table B1.1**) for correct operation of the dust extraction.
2	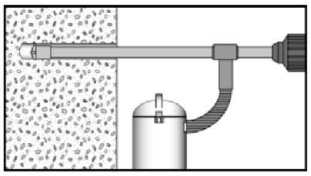	Use a suitable dust extraction system, e. g. fischer FVC 35 M or a comparable dust extraction system with equivalent performance data. Drill the hole with hollow drill bit. The dust extraction system has to extract the drill dust nonstop during the drilling process and must be adjusted to maximum power. Nominal drill hole diameter $\mathbf{d_0}$ and drill hole depth $\mathbf{h_0}$ see **Tables B4.1, B6.1, B7.1, B8.1**.

Go to step 5 (Annex B 12)

Installation instructions part 2; injection mortar system FIS SB

Preparing the cartridge

5	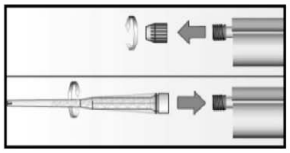		Remove the sealing cap Screw on the static mixer (the spiral in the static mixer must be clearly visible).
6	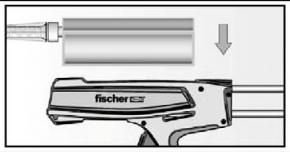	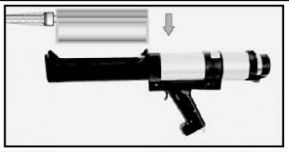	Place the cartridge into the dispenser.
7	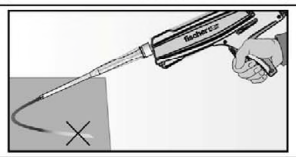	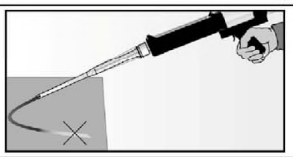	Extrude approximately 10 cm of material out until the resin is evenly grey in colour. Do not use mortar that is not uniformly grey.

Injection of the mortar

8	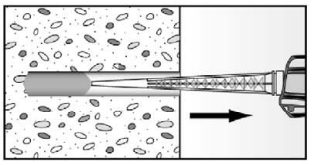 For $h_0 = h_{ef}$ fill approximately 2/3 of the drill hole with mortar. For $h_0 > h_{ef}$ more mortar is needed. Always begin from the bottom of the hole and avoid bubbles.	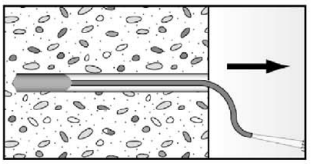 The conditions for mortar injection without extension tube can be found in **Table B11.2.** For deeper drill holes, than those mentioned in **Table B11.2,** use a suitable extension tube.	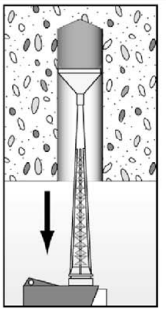 For overhead installation, deep holes (h_0 > 250 mm) or drill hole diameter (d_0 ≥ 30 mm) use an injection-adapter.

Go to step 9 (Annex B 13)

Installation instructions part 3; injection mortar system FIS SB

Installation of anchor rods or fischer internal threaded anchors RG M I

9	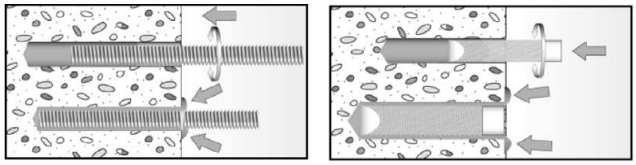	Only use clean and oil-free metal part. Mark the setting depth of the metal part. Push the anchor rod or fischer internal threaded RG M I anchor down to the bottom of the hole, turning it slightly while doing so. After inserting the metal part, excess mortar must be emerged around the anchor element. If not, pull out the metal part immediately and reinject mortar.		
9a	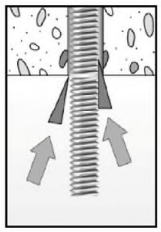	For overhead installations support the metal part with wedges. (e. g. fischer centering wedges).	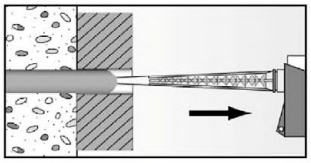	For push through installation fill the annular gap with mortar.
10		Wait for the specified curing time t_{cure} see **Table B11.3**.	**11**	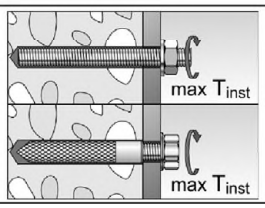 Mounting the fixture max T_{inst} see **Tables B4.1** and **B6.1**.
Option	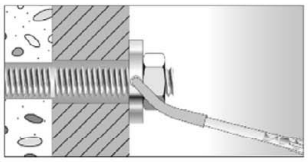	After the minimum curing time is reached, the gap between metal part and fixture (annular clearance) may be filled with mortar via the fischer filling disc. Compressive strength ≥ 50 N/mm² (e.g. fischer injection mortars FIS HB, FIS SB, FIS V, FIS EM Plus). ATTENTION: Using fischer filling disc reduces t_{fix} (usable length of the anchor).		

Installation reinforcing bars and fischer rebar anchor FRA

9	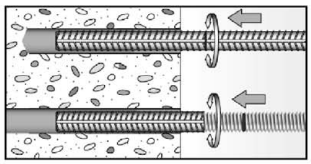	Only use clean and oil-free reinforcing bars or fischer FRA. Mark the setting depth. Turn while using force to push the reinforcement bar or the fischer FRA into the filled hole up to the setting depth mark.		
	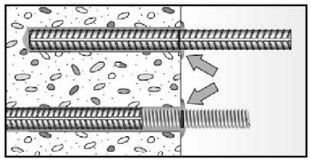	When the setting depth mark is reached, excess mortar must be emerged from the mouth of the drill hole. If not, pull out the anchor element immediately and reinject mortar.		
10		Wait for the specified curing time t_{cure} see **Table B11.3**.	**11**	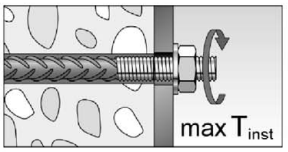 Mounting the fixture max T_{inst} see **Table B8.1**.

Installation instructions part 4; resin capsule RSB

Drilling and cleaning the hole (hammer drilling with standard drill bit)

1	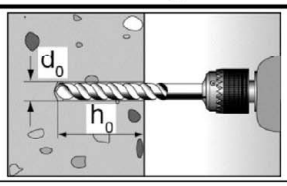	Drill the hole. Nominal drill hole diameter $\mathbf{d_0}$ and drill hole depth $\mathbf{h_0}$ see **Tables B5.1** and **B6.1**
2	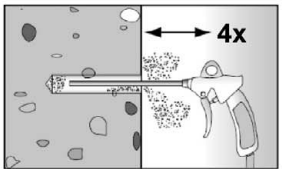	Clean the drill hole: Blow out the drill hole four times, with oil free compressed air (p ≥ 6 bar) In uncracked concrete the use of the manual blow-out pump ABG is possible (Installation parameters: d_0 < 18 mm and h_{ef} < 10d) 

Go to step 6 (Annex B 16)

Drilling and cleaning the hole (wet drilling with diamond drill bit)

1	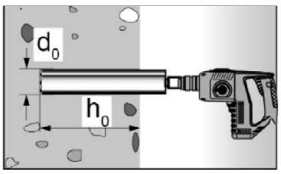	Drill the hole. Drill hole diameter $\mathbf{d_0}$ and drill hole depth $\mathbf{h_0}$ see **Tables B5.1** and **B6.1**.	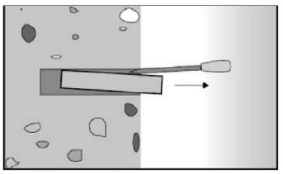 Break the drill core and remove it.
2	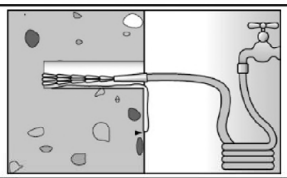	Flush the drill hole with clean water until it flows clear.	
3	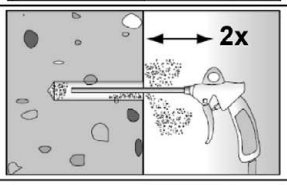	Blow out the drill hole twice, using oil-free compressed air (p > 6 bar).	
4	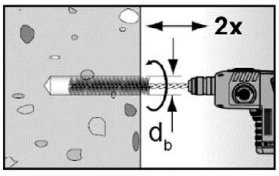	Brush the drill hole twice using a power drill. Corresponding brushes see **Table B11.1**.	
5	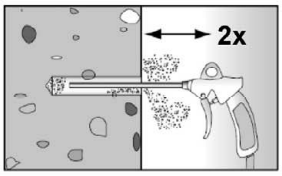	Blow out the drill hole twice, using oil-free compressed air (p > 6 bar).	

Go to step 6 (Annex B 16)

Installation instructions part 5; resin capsule RSB

Drilling and cleaning the hole (hammer drilling with hollow drill bit)

1	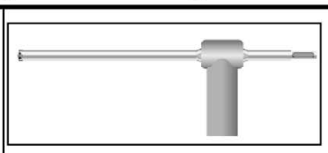	Check a suitable hollow drill (see **Table B2.1**) for correct operation of the dust extraction.
2	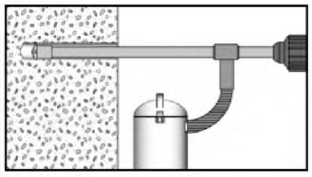	Use a suitable dust extraction system, e. g. fischer FVC 35 M or a comparable dust extraction system with equivalent performance data. Drill the hole with hollow drill bit. The dust extraction system has to extract the drill dust nonstop during the drilling process and must be adjusted to maximum power. Nominal drill hole diameter d_0 and drill hole depth h_0 see **Tables B5.1** and **B6.1**.

Go to step 6 (Annex B 16)

Installation fischer anchor rod RG M or fischer internal threaded anchor RG M I

6	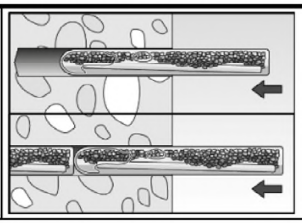	Insert the resin capsule into the drill hole by hand. Suitable resin capsule RSB or RSB mini see **Table B9.2**.

Installation with rotary hammer

7a	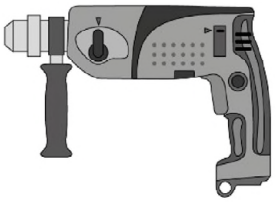	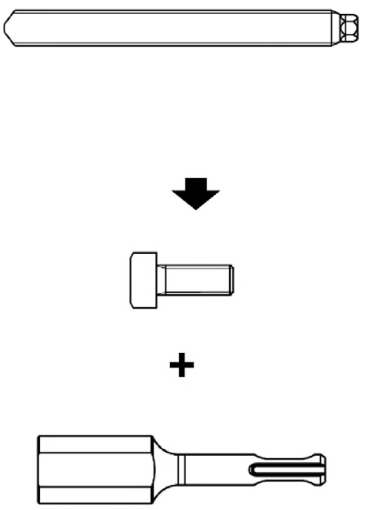 SK SW 8 ½" VK (M8-M22)	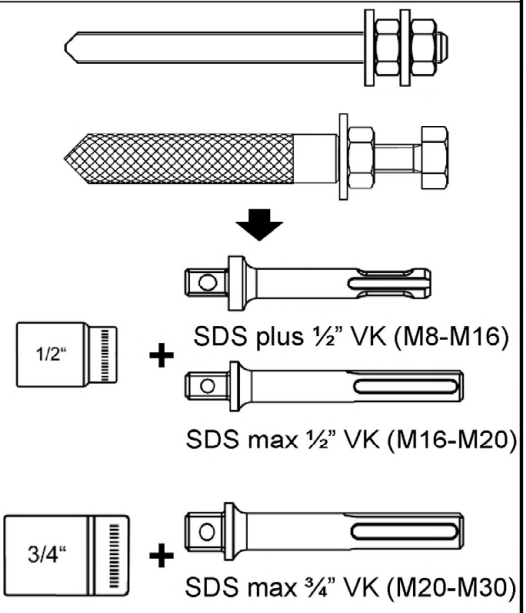
	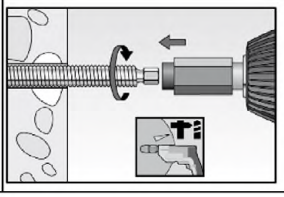 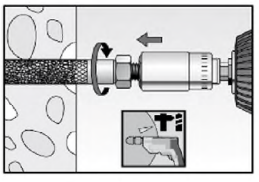	Only use clean and grease-free metal parts. Using a suitable adapter, drive the fischer anchor rod RG M or the fischer internal threaded anchor RG M I into the capsule using a rotary hammer on rotary hammer mode. Stop when the metal parts reaches the bottom of the hole and is set to the correct embedment depth.	

Installation instructions part 6; resin capsule RSB
Installation fischer anchor rod RG M or fischer internal threaded anchor RG M I (continue)

Installation with cordless drill or tangential impact screwdriver (Specification according to step 7c)

7b

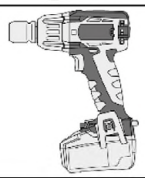

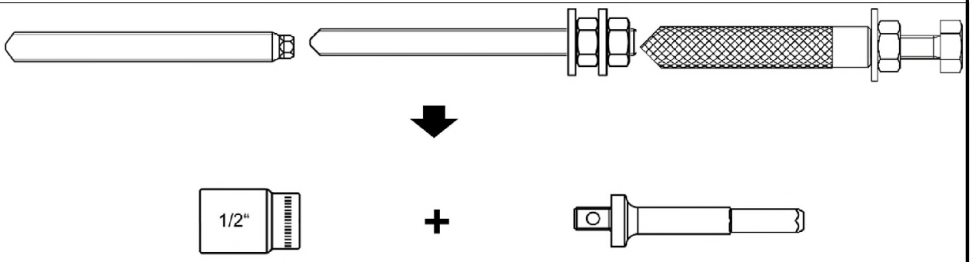

Anchor rod RG M: SK SW 8 ½" VK (M8-M16)
Internal threaded anchor RG M I: SK SW 8 ½" VK (M8-M12)

7c

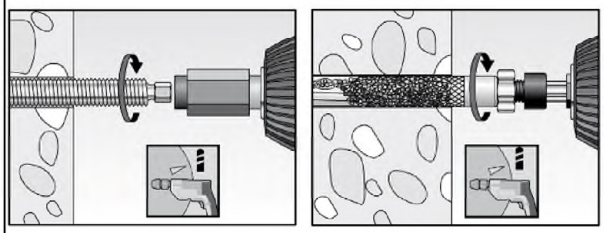

Only use clean and grease-free metal parts. Using a suitable adapter, drive the fischer anchor rod RG M or the fischer internal threaded anchor RG M I into the capsule using a cordless drill screwdriver (only drilling operation, torque = 0 - 32 Nm and idle speed = 0 - 450 revolutions per minute, e.g., FEIN ASB 18, 1st gear or equivalent power tool) or tangential impact screw driver (torque = 0 - 400 Nm and idle speed = 0-2.150 revolutions per minute; e.g. fischer FSS 18V 400BL, torque setting 12 or equivalent power tool).
Stop when the metal parts reaches the bottom of the hole and is set to the correct embedment depth.

8

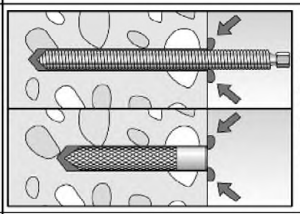

When reaching the correct embedment depth, excess mortar must emerge from the mouth of the drill hole. If not, the metal parts must be pulled out directly and a second resin capsule must be pushed into the drill hole. Setting process must be repeated (Step 7).

9

Wait for the specified curing time, t_{cure} see **Table B11.3**.

10

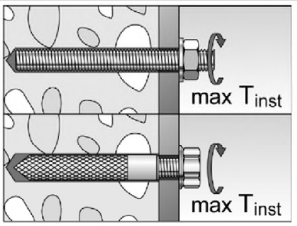

Mounting the fixture max T_{inst} see **Tables B5.1** and **B6.1**.

Table C1.1: Characteristic resistance to **steel failure** under tension / shear loading of **fischer anchor rods** and **standard threaded rods**

Anchor rod / standard threaded rod				M8	M10	M12	M16	M20	M24	M27	M30
Characteristic resistance to steel failure under tension loading [3]											
Characteristic resistance $N_{Rk,s}$	Steel zinc plated	Property class	4.8	[kN]	15(13)	23(21)	33	63	98	141	184	224
			5.8		19(17)	29(27)	43	79	123	177	230	281
			8.8		29(27)	47(43)	68	126	196	282	368	449
	Stainless steel R and high corrosion resistant steel HCR		50		19	29	43	79	123	177	230	281
			70		26	41	59	110	172	247	322	393
			80		30	47	68	126	196	282	368	449
Partial factors [1]											
Partial factor $\gamma_{Ms,N}$	Steel zinc plated	Property class	4.8	[-]	1,50						
			5.8		1,50						
			8.8		1,50						
	Stainless steel R and high corrosion resistant steel HCR		50		2,86						
			70		1,87 / fischer HCR: 1,50						
			80		1,60						
Characteristic resistance to steel failure under shear loading [3]											
without lever arm											
Characteristic resistance $V^0_{Rk,s}$	Steel zinc plated	Property class	4.8	[kN]	9(8)	14(13)	20	38	59	85	110	135
			5.8		11(10)	17(16)	25	47	74	106	138	168
			8.8		15(13)	23(21)	34	63	98	141	184	225
	Stainless steel R and high corrosion resistant steel HCR		50		9	15	21	39	61	89	115	141
			70		13	20	30	55	86	124	161	197
			80		15	23	34	63	98	141	184	225
Ductility factor			k_7	[-]	1,0						
with lever arm											
Characteristic resistance $M^0_{Rk,s}$	Steel zinc plated	Property class	4.8	[Nm]	15(13)	30(27)	52	133	259	448	665	899
			5.8		19(16)	37(33)	65	166	324	560	833	1123
			8.8		30(26)	60(53)	105	266	519	896	1333	1797
	Stainless steel R and high corrosion resistant steel HCR		50		19	37	65	166	324	560	833	1123
			70		26	52	92	232	454	784	1167	1573
			80		30	60	105	266	519	896	1333	1797
Partial factors [1]											
Partial factor $\gamma_{Ms,V}$	Steel zinc plated	Property class	4.8	[-]	1.25						
			5.8		1.25						
			8.8		1.25						
	Stainless steel R and high corrosion resistant steel HCR		50		2.38						
			70		1.56 / fischer HCR: 1.25[2]						
			80		1.33						

[1] In absence of other national regulations
[2] Only admissible for high corrosion resistant steel C, with $f_{yk} / f_{uk} \geq 0{,}8$ and $A_5 > 12$ % (e.g. fischer anchor rods)
[3] Values in brackets are valid for undersized threaded rods with smaller stress area A_s for hotdip galvanized standard threaded rods according to EN ISO 10684:2004+AC:2009

Table C2.1: Characteristic resistance to **steel failure** under tension / shear loading of **fischer internal threaded anchors RG M I**

fischer internal threaded anchors RG M I					M8	M10	M12	M16	M20
Characteristic resistance to steel failure under tension loading									
Charact. resistance with screw	$N_{Rk,s}$	Property class	5.8	[kN]	19	29	43	79	123
			8.8		29	47	68	108	179
		Property class 70	R		26	41	59	110	172
			HCR		26	41	59	110	172
Partial factors[1]									
Partial factors	$\gamma_{Ms,N}$	Property class	5.8	[-]	1,50				
			8.8		1,50				
		Property class 70	R		1,87				
			HCR		1,87				
Characteristic resistance to steel failure under shear loading									
Without lever arm									
Charact. resistance with screw	$V^0_{Rk,s}$	Property class	5.8	[kN]	9,2	14,5	21,1	39,2	62,0
			8.8		14,6	23,2	33,7	54,0	90,0
		Property class 70	R		12,8	20,3	29,5	54,8	86,0
			HCR		12,8	20,3	29,5	54,8	86,0
Ductility factor			k_7	[-]	1,0				
With lever arm									
Charact. resistance with screw	$M^0_{Rk,s}$	Property class	5.8	[Nm]	20	39	68	173	337
			8.8		30	60	105	266	519
		Property class 70	R		26	52	92	232	454
			HCR		26	52	92	232	454
Partial factors[1]									
Partial factors	$\gamma_{Ms,V}$	Property class	5.8	[-]	1,25				
			8.8		1,25				
		Property class 70	R		1,56				
			HCR		1,56				

[1] In absence of other national regulations

Table C3.1: Characteristic resistance to **steel failure** under tension and shear loading of **reinforcing bars**

Nominal diameter of the bar		**ϕ**	**8**	**10**	**12**	**14**	**16**	**20**	**25**	**28**	**32**
Characteristic resistance to steel failure under tension loading											
Characteristic resistance	$N_{Rk,s}$	[kN]	$A_s \cdot f_{uk}$ 2)								
Characteristic resistance to steel failure under shear loading											
Without lever arm											
Characteristic resistance	$V^0_{Rk,s}$	[kN]	k_6 1) $\cdot A_s \cdot f_{uk}$ 2)								
Ductility factor	k_7	[-]	1,0								
With lever arm											
Characteristic resistance	$M^0_{Rk,s}$	[Nm]	$1{,}2 \cdot W_{el} \cdot f_{uk}$ 2)								

1) In accordance with EN 1992-4:2018 section 7.2.2.3.1
k_6 = 0,6 for fasteners made of carbon steel with $f_{uk} \leq 500$ N/mm²
= 0,5 for fasteners made of carbon steel with $500 < f_{uk} \leq 1000$ N/mm²
= 0,5 for fasteners made of stainless steel

2) f_{uk} respectively shall be taken from the specifications of the rebar.

Table C3.2: Characteristic resistance to **steel failure** under tension and shear loading of **fischer rebar anchors FRA**

fischer rebar anchor FRA			**M12**	**M16**	**M20**	**M24**
Characteristic resistance to steel failure under tension loading						
Characteristic resistance	$N_{Rk,s}$	[kN]	62,1	110,5	172,7	263,0
Partial factor 1)						
Partial factor	$\gamma_{Ms,N}$	[-]	1,4			
Characteristic resistance to steel failure under shear loading						
Without lever arm						
Characteristic resistance	$V^0_{Rk,s}$	[kN]	33,7	62,8	98,0	141,2
Ductility factor	k_7	[-]	1,0			
With lever arm						
Characteristic resistance	$M^0_{Rk,s}$	[Nm]	104,8	266,3	519,2	898,0
Partial factor 1)						
Partial factor	$\gamma_{Ms,V}$	[-]	1,25			

1) In absence of other national regulations

Table C4.1: Characteristic resistance to **concrete failure** under tension / shear loading

Size				**All sizes**							
Tension loading											
Installation factor		γ_{inst}	[-]	See annex C 5 to C 10 and C 15 to C16							
Factors for the compressive strength of concrete > C20/25											
Increasing factor ψ_c for cracked or uncracked concrete $\tau_{Rk(X,Y)} = \psi_c \cdot \tau_{Rk(C20/25)}$	C25/30	Ψ_c	[-]	1,02							
	C30/37			1,04							
	C35/45			1,07							
	C40/50			1,08							
	C45/55			1,09							
	C50/60			1,10							
Splitting failure											
Edge distance	$h / h_{ef} \geq 2{,}0$	$c_{cr,sp}$	[mm]	$1{,}0\ h_{ef}$							
	$2{,}0 > h / h_{ef} > 1{,}3$			$4{,}6\ h_{ef} - 1{,}8\ h$							
	$h / h_{ef} \leq 1{,}3$			$2{,}26\ h_{ef}$							
Spacing		$s_{cr,sp}$		$2\ c_{cr,sp}$							
Concrete cone failure											
Uncracked concrete		$k_{ucr,N}$	[-]	11,0							
Cracked concrete		$k_{cr,N}$		7,7							
Edge distance		$c_{cr,N}$	[mm]	$1{,}5\ h_{ef}$							
Spacing		$s_{cr,N}$		$2\ c_{cr,N}$							
Factors for sustained tension loading											
Temperature range			[-]	24 °C / 40 °C	50 °C / 80 °C	72 °C / 120 °C	90 °C / 150 °C				
Factor		Ψ^0_{sus}	[-]	0,84	0,86	0,84	0,91				
Shear loading											
Installation factor		γ_{inst}	[-]	1,0							
Concrete pry-out failure											
Factor for pry-out failure		k_8	[-]	2,0							
Concrete edge failure											
Effective length of fastener in shear loading		l_f	[mm]	for $d_{nom} \leq 24$ mm: min (h_{ef}; 12 d_{nom}) for $d_{nom} > 24$ mm: min (h_{ef}; 8 d_{nom}; 300 mm)							
Calculation diameters											
Size				M8	M10	M12	M16	M20	M24	M27	M30
fischer anchor rods and standard threaded rods		d_{nom}	[mm]	8	10	12	16	20	24	27	30
fischer internal threaded anchors RG M I		d_{nom}		12	16	18	22	28	-[1]	-[1]	-[1]
fischer rebar anchor FRA		d_{nom}		-[1]	-[1]	12	16	20	25	-[1]	-[1]
Size (nominal diameter of the bar)			ϕ	8	10	12	14	16	20	25	28	32
Reinforcing bar		d_{nom}	[mm]	8	10	12	14	16	20	25	28	32

[1] Anchor type not part of the ETA

Table C5.1: Characteristic resistance to **combined pull-out** and **concrete failure** for **fischer anchor rods** and **standard threaded rods** in hammer drilled holes in combination with **injection mortar FIS SB**; **uncracked or cracked concrete**

Anchor rod / standard threaded rod				**M8**	**M10**	**M12**	**M16**	**M20**	**M24**	**M27**	**M30**
Combined pullout and concrete cone failure											
Thread diameter		d	[mm]	8	10	12	16	20	24	27	30
Uncracked concrete											
Characteristic bond resistance in uncracked concrete C20/25											
Hammer-drilling with standard drill bit or hollow drill bit (dry or wet concrete)											
Temperature range	I: 24 °C / 40 °C	$\tau_{Rk,ucr}$	[N/mm²]	12	13	13	13	13	12	10	10
	II: 50 °C / 80 °C			12	12	12	13	13	12	10	10
	III: 72 °C / 120 °C			10	11	11	11	11	11	9,0	9,0
	IV: 90 °C / 150 °C			10	10	10	11	10	10	8,0	8,0
Installation factors											
Dry or wet concrete		γ_{inst}	[-]	1,0							
Cracked concrete											
Characteristic bond resistance in cracked concrete C20/25											
Hammer-drilling with standard drill bit or hollow drill bit (dry or wet concrete)											
Temperature range	I: 24 °C / 40 °C	$\tau_{Rk,cr}$	[N/mm²]	6,5	7,0	7,5	7,5	7,5	7,5	7,5	7,5
	II: 50 °C / 80 °C			6,0	6,5	7,5	7,5	7,5	7,5	7,0	7,0
	III: 72 °C / 120 °C			5,5	6,0	6,5	6,5	6,5	6,5	6,0	6,0
	IV: 90 °C / 150 °C			5,0	5,5	6,0	6,0	6,0	6,0	5,5	5,5
Installation factors											
Dry or wet concrete		γ_{inst}	[-]	1,0							

Table C6.1: Characteristic resistance to **combined pull-out** and concrete failure for **fischer anchor rods RG M** in hammer or diamond drilled holes in combination with **resin capsule RSB**; **uncracked or cracked concrete**

Anchor rod RG M				**M8**	**M10**	**M12**	**M16**	**M20**	**M24**	**M30**
Combined pullout and concrete cone failure										
Thread diameter		d	[mm]	8	10	12	16	20	24	30
Uncracked concrete										
Characteristic bond resistance in uncracked concrete C20/25										
Hammer-drilling with standard drill bit or hollow drill bit (dry or wet concrete as well as water filled hole)										
Temperature range	I: 24 °C / 40 °C	$\tau_{Rk,ucr}$	[N/mm²]	12	13	13	13	13	12	10
	II: 50 °C / 80 °C			12	12	12	13	13	12	10
	III: 72 °C / 120 °C			10	11	11	11	11	11	9,0
	IV: 90 °C / 150 °C			10	10	10	11	10	10	8,0
Diamond-drilling (dry or wet concrete as well as water filled hole)										
Temperature range	I: 24 °C / 40 °C	$\tau_{Rk,ucr}$	[N/mm²]	13	13	14	14	14	13	11
	II: 50 °C / 80 °C			12	13	13	14	13	13	10
	III: 72 °C / 120 °C			11	12	12	12	12	11	9,5
	IV: 90 °C / 150 °C			10	11	11	11	11	10	8,5
Installation factors										
Dry or wet concrete		γ_{inst}	[-]	1,0						
Water filled hole				1,2		1,0				
Cracked concrete										
Characteristic bond resistance in cracked concrete C20/25										
Hammer-drilling with standard drill bit or hollow drill bit (dry or wet concrete as well as water filled hole)										
Temperature range	I: 24 °C / 40 °C	$\tau_{Rk,cr}$	[N/mm²]	6,5	7,0	7,5	7,5	7,5	7,5	7,5
	II: 50 °C / 80 °C			6,0	6,5	7,5	7,5	7,5	7,5	7,0
	III: 72 °C / 120 °C			5,5	6,0	6,5	6,5	6,5	6,5	6,0
	IV: 90 °C / 150 °C			5,0	5,5	6,0	6,0	6,0	6,0	5,5
Diamond-drilling (dry or wet concrete as well as water filled hole)										
Temperature range	I: 24 °C / 40 °C	$\tau_{Rk,cr}$	[N/mm²]	-[1)]	-[1)]	-[1)]	7,5	7,5	7,5	7,5
	II: 50 °C / 80 °C			-[1)]	-[1)]	-[1)]	7,5	7,5	7,5	7,0
	III: 72 °C / 120 °C			-[1)]	-[1)]	-[1)]	6,5	6,5	6,5	6,5
	IV: 90 °C / 150 °C			-[1)]	-[1)]	-[1)]	6,0	6,0	6,0	6,0
Installation factors										
Dry or wet concrete		γ_{inst}	[-]	1,0						
Water filled hole				1,2		1,0				

[1)] No performance assessed

Table C7.1: Characteristic resistance to **combined pull-out** and concrete failure for **fischer internal threaded anchors RG M I** in hammer drilled holes in combination with **injection mortar FIS SB**; **uncracked or cracked concrete**

Internal threaded anchor RG M I				**M8**	**M10**	**M12**	**M16**	**M20**
Combined pullout and concrete cone failure								
Sleeve diameter		d	[mm]	12	16	18	22	28
Uncracked concrete								
Characteristic bond resistance in uncracked concrete C20/25								
Hammer-drilling with standard drill bit or hollow drill bit (dry or wet concrete)								
Temperature range	I: 24 °C / 40 °C	$\tau_{Rk,ucr}$	[N/mm²]	12	12	11	11	9,5
	II: 50 °C / 80 °C			12	11	11	10	9,0
	III: 72 °C / 120 °C			11	10	10	9,0	8,0
	IV: 90 °C / 150 °C			10	9,5	9,0	8,5	7,5
Installation factors								
Dry or wet concrete		γ_{inst}	[-]	1,0				
Cracked concrete								
Characteristic bond resistance in cracked concrete C20/25								
Hammer-drilling with standard drill bit or hollow drill bit (dry or wet concrete)								
Temperature range	I: 24 °C / 40 °C	$\tau_{Rk,cr}$	[N/mm²]	5,0				
	II: 50 °C / 80 °C			5,0				
	III: 72 °C / 120 °C			4,5				
	IV: 90 °C / 150 °C			4,0				
Installation factors								
Dry or wet concrete		γ_{inst}	[-]	1,0				

Table C8.1: Characteristic resistance to **combined pull-out** and concrete failure for **fischer internal threaded anchors RG M I** in hammer or diamond drilled holes in combination with **resin capsule RSB**; **uncracked or cracked concrete**

Internal threaded anchor RG M I				**M8**	**M10**	**M12**	**M16**	**M20**
Combined pullout and concrete cone failure								
Sleeve diameter		d	[mm]	12	16	18	22	28
Uncracked concrete								
Characteristic bond resistance in uncracked concrete C20/25								
Hammer-drilling with standard drill bit or hollow drill bit (dry or wet concrete as well as water filled hole)								
Temperature range	I: 24 °C / 40 °C	$\tau_{Rk,ucr}$	[N/mm²]	12	12	11	11	9,5
	II: 50 °C / 80 °C			12	11	11	10	9,0
	III: 72 °C / 120 °C			11	10	10	9,0	8,0
	IV: 90 °C / 150 °C			10	9,5	9,0	8,5	7,5
Diamond-drilling (dry or wet concrete as well as water filled hole)								
Temperature range	I: 24 °C / 40 °C	$\tau_{Rk,ucr}$	[N/mm²]	13	12	12	11	10
	II: 50 °C / 80 °C			13	12	12	11	9,5
	III: 72 °C / 120 °C			11	11	10	9,5	8,5
	IV: 90 °C / 150 °C			10	10	9,5	9,0	8,0
Installation factors								
Dry or wet concrete		γ_{inst}	[-]	1,0				
Water filled hole				1,2	1,0			
Cracked concrete								
Characteristic bond resistance in cracked concrete C20/25								
Hammer-drilling with standard drill bit or hollow drill bit (dry or wet concrete as well as water filled hole)								
Temperature range	I: 24 °C / 40 °C	$\tau_{Rk,cr}$	[N/mm²]	5,0				
	II: 50 °C / 80 °C			5,0				
	III: 72 °C / 120 °C			4,5				
	IV: 90 °C / 150 °C			4,0				
Diamond-drilling (dry or wet concrete as well as water filled hole)								
Temperature range	I: 24 °C / 40 °C	$\tau_{Rk,cr}$	[N/mm²]	-[1)]	5,0			
	II: 50 °C / 80 °C			-[1)]	5,0			
	III: 72 °C / 120 °C			-[1)]	4,5			
	IV: 90 °C / 150 °C			-[1)]	4,0			
Installation factors								
Dry or wet concrete		γ_{inst}	[-]	1,0				
Water filled hole				1,2	1,0			

[1)] No performance assessed

Table C9.1: Characteristic resistance to **combined pull-out** and concrete failure for **reinforcing bars** in hammer drilled holes in combination with **injection mortar FIS SB**; **uncracked or cracked concrete**

Nominal diameter of the bar			**ϕ**	**8**	**10**	**12**	**14**	**16**	**20**	**25**	**28**	**32**
Combined pullout and concrete cone failure												
Bar diameter		d	[mm]	8	10	12	14	16	20	25	28	32
Uncracked concrete												
Characteristic bond resistance in uncracked concrete C20/25												
Hammer-drilling with standard drill bit or hollow drill bit (dry or wet concrete)												
Temperature range	I: 24 °C / 40 °C	$\tau_{Rk,ucr}$	[N/mm²]	8,0	8,5	9,0	9,5	9,5	10	9,5	9,0	7,5
	II: 50 °C / 80 °C			8,0	8,5	9,0	9,0	9,5	9,5	9,0	8,5	7,5
	III: 72 °C / 120 °C			7,0	7,5	8,0	8,0	8,5	8,5	8,0	7,5	6,5
	IV: 90 °C / 150 °C			6,5	7,0	7,0	7,5	7,5	8,0	7,5	7,0	6,0
Installation factors												
Dry or wet concrete		γ_{inst}	[-]	1,0								
Cracked concrete												
Characteristic bond resistance in cracked concrete C20/25												
Hammer-drilling with standard drill bit or hollow drill bit (dry or wet concrete)												
Temperature range	I: 24 °C / 40 °C	$\tau_{Rk,cr}$	[N/mm²]	4,5	6,0	6,0	6,0	7,0	6,0	6,0	6,0	6,0
	II: 50 °C / 80 °C			4,5	5,5	5,5	5,5	6,5	6,0	6,0	6,0	6,0
	III: 72 °C / 120 °C			4,0	5,0	5,0	5,0	6,0	5,5	5,5	5,5	5,5
	IV: 90 °C / 150 °C			3,5	4,5	4,5	4,5	5,5	5,0	5,0	5,0	5,0
Installation factors												
Dry or wet concrete		γ_{inst}	[-]	1,0								

Table C10.1: Characteristic resistance to **combined pull-out** and concrete failure for **fischer rebar anchors FRA** in hammer drilled holes in combination with **injection mortar FIS SB**; **uncracked or cracked concrete**

fischer rebar anchor FRA				**M12**	**M16**	**M20**	**M24**
Combined pullout and concrete cone failure							
Bar diameter		d	[mm]	12	16	20	25
Uncracked concrete							
Characteristic bond resistance in uncracked concrete C20/25							
Hammer-drilling with standard drill bit or hollow drill bit (dry or wet concrete)							
Temperature range	I: 24 °C / 40 °C	$\tau_{Rk,ucr}$	[N/mm²]	9,0	9,5	10	9,5
	II: 50 °C / 80 °C			9,0	9,5	9,5	9,0
	III: 72 °C / 120 °C			8,0	8,5	8,5	8,0
	IV: 90 °C / 150 °C			7,0	7,5	8,0	7,5
Installation factors							
Dry or wet concrete		γ_{inst}	[-]	1,0			
Cracked concrete							
Characteristic bond resistance in cracked concrete C20/25							
Hammer-drilling with standard drill bit or hollow drill bit (dry or wet concrete)							
Temperature range	I: 24 °C / 40 °C	$\tau_{Rk,cr}$	[N/mm²]	6,0	7,0	6,0	6,0
	II: 50 °C / 80 °C			5,5	6,5	6,0	6,0
	III: 72 °C / 120 °C			5,0	6,0	5,5	5,5
	IV: 90 °C / 150 °C			4,5	5,5	5,0	5,0
Installation factors							
Dry or wet concrete		γ_{inst}	[-]	1,0			

Table C11.1: Displacements for anchor rods

Anchor rod		M8	M10	M12	M16	M20	M24	M27	M30
Displacement-Factors for tension loading[1)]									
Uncracked or cracked concrete; Temperature range I, II, III, IV									
$\delta_{N0\text{-Factor}}$	[mm/(N/mm²)]	0,07	0,08	0,09	0,10	0,11	0,12	0,12	0,13
$\delta_{N\infty\text{-Factor}}$		0,13	0,14	0,15	0,17	0,17	0,18	0,19	0,19
Displacement-Factors for shear loading[2)]									
Uncracked or cracked concrete; Temperature range I, II, III, IV									
$\delta_{V0\text{-Factor}}$	[mm/kN]	0,18	0,15	0,12	0,09	0,07	0,06	0,05	0,05
$\delta_{V\infty\text{-Factor}}$		0,27	0,22	0,18	0,14	0,11	0,09	0,08	0,07

1) Calculation of effective displacement:

$\delta_{N0} = \delta_{N0\text{-Factor}} \cdot \tau$

$\delta_{N\infty} = \delta_{N\infty\text{-Factor}} \cdot \tau$

τ: acting bond strength under tension loading

2) Calculation of effective displacement:

$\delta_{V0} = \delta_{V0\text{-Factor}} \cdot V$

$\delta_{V\infty} = \delta_{V\infty\text{-Factor}} \cdot V$

V: acting shear loading

Table C11.2: Displacements for fischer internal threaded anchors RG M I

Internal threaded anchor RG M I		M8	M10	M12	M16	M20
Displacement-Factors for tension loading[1)]						
Uncracked or cracked concrete; Temperature range I, II, III, IV						
$\delta_{N0\text{-Factor}}$	[mm/(N/mm²)]	0,09	0,10	0,10	0,11	0,19
$\delta_{N\infty\text{-Factor}}$		0,13	0,15	0,15	0,17	0,19
Displacement-Factors for shear loading[2)]						
Uncracked or cracked concrete; Temperature range I, II, III, IV						
$\delta_{V0\text{-Factor}}$	[mm/kN]	0,12	0,09	0,08	0,07	0,05
$\delta_{V\infty\text{-Factor}}$		0,18	0,14	0,12	0,10	0,08

1) Calculation of effective displacement:

$\delta_{N0} = \delta_{N0\text{-Factor}} \cdot \tau$

$\delta_{N\infty} = \delta_{N\infty\text{-Factor}} \cdot \tau$

τ: acting bond strength under tension loading

2) Calculation of effective displacement:

$\delta_{V0} = \delta_{V0\text{-Factor}} \cdot V$

$\delta_{V\infty} = \delta_{V\infty\text{-Factor}} \cdot V$

V: acting shear loading

Table C12.1: Displacements for reinforcing bars

Nominal diameter of the bar	ϕ	8	10	12	14	16	20	25	28	32
Displacement-Factors for tension loading[1)]										
Uncracked or cracked concrete; Temperature range I, II, III, IV										
$\delta_{N0\text{-Factor}}$	[mm/(N/mm²)]	0,07	0,08	0,09	0,09	0,10	0,11	0,12	0,13	0,13
$\delta_{N\infty\text{-Factor}}$		0,11	0,13	0,13	0,15	0,16	0,16	0,18	0,20	0,20
Displacement-Factors for shear loading[2)]										
Uncracked or cracked concrete; Temperature range I, II, III, IV										
$\delta_{V0\text{-Factor}}$	[mm/kN]	0,18	0,15	0,12	0,10	0,09	0,07	0,06	0,05	0,05
$\delta_{V\infty\text{-Factor}}$		0,27	0,22	0,18	0,16	0,14	0,11	0,09	0,08	0,06

1) Calculation of effective displacement:

$\delta_{N0} = \delta_{N0\text{-Factor}} \cdot \tau$

$\delta_{N\infty} = \delta_{N\infty\text{-Factor}} \cdot \tau$

τ: acting bond strength under tension loading

2) Calculation of effective displacement:

$\delta_{V0} = \delta_{V0\text{-Factor}} \cdot V$

$\delta_{V\infty} = \delta_{V\infty\text{-Factor}} \cdot V$

V: acting shear loading

Table C12.2: Displacements for fischer rebar anchors FRA

fischer rebar anchor FRA		M12	M16	M20	M24
Displacement-Factors for tension load[1)]					
Uncracked or cracked concrete; Temperature range I, II, III, IV					
$\delta_{N0\text{-Factor}}$	[mm/(N/mm²)]	0,09	0,10	0,11	0,12
$\delta_{N\infty\text{-Factor}}$		0,13	0,15	0,16	0,18
Displacement-Factors for shear load[2)]					
Uncracked or cracked concrete; Temperature range I, II, III, IV					
$\delta_{V0\text{-Factor}}$	[mm/kN]	0,12	0,09	0,07	0,06
$\delta_{V\infty\text{-Factor}}$		0,18	0,14	0,11	0,09

1) Calculation of effective displacement:

$\delta_{N0} = \delta_{N0\text{-Factor}} \cdot \tau$

$\delta_{N\infty} = \delta_{N\infty\text{-Factor}} \cdot \tau$

τ: acting bond strength under tension loading

2) Calculation of effective displacement:

$\delta_{V0} = \delta_{V0\text{-Factor}} \cdot V$

$\delta_{V\infty} = \delta_{V\infty\text{-Factor}} \cdot V$

V: acting shear loading

Table C13.1: Characteristic resistance to **steel failure** under tension / shear loading of **fischer anchor rods** and **standard threaded rods** under seismic action performance category **C1 or C2**

Anchor rod / standard threaded rod					M8	M10	M12	M16	M20	M24	M27	M30
Characteristic resistance to steel failure under tension loading[1)]												
fischer anchor rods and standard threaded rods, performance category C1 [2)]												
Characteristic resistance $N_{Rk,s,C1}$	Steel zinc plated	Property class	5.8	[kN]	19(17)	29(27)	43	79	123	177	230	281
			8.8		29(27)	47(43)	68	126	196	282	368	449
	Stainless steel R and high corrosion resistant steel HCR		50		19	29	43	79	123	177	230	281
			70		26	41	59	110	172	247	322	393
			80		30	47	68	126	196	282	368	449
fischer anchor rods and standard threaded rods, performance category C2 [2)]												
Characteristic resistance $N_{Rk,s,C2}$	Steel zinc plated	Property class	5.8	[-]	-[4)]	-[4)]	39	72	108	177	-[4)]	-[4)]
			8.8		-[4)]	-[4)]	61	116	173	282	-[4)]	-[4)]
	Stainless steel R and high corrosion resistant steel HCR		50		-[4)]	-[4)]	39	72	108	177	-[4)]	-[4)]
			70		-[4)]	-[4)]	53	101	152	247	-[4)]	-[4)]
			80		-[4)]	-[4)]	61	116	173	282	-[4)]	-[4)]
Characteristic resistance to steel failure under shear loading without lever arm[1)]												
fischer anchor rods, performance category C1 [2)]												
Characteristic resistance $V_{Rk,s,C1}$	Steel zinc plated	Property class	5.8	[kN]	11(10)	17(16)	25	47	74	106	138	168
			8.8		15(13)	23(21)	34	63	98	141	184	225
	Stainless steel R and high corrosion resistant steel HCR		50		9	15	21	39	61	89	115	141
			70		13	20	30	55	86	124	161	197
			80		15	23	34	63	98	141	184	225
Standard threaded rods, performance category C1 [2)]												
Characteristic resistance $V_{Rk,s,C1}$	Steel zinc plated	Property class	5.8	[kN]	8(7)	12(11)	17	33	52	74	97	118
			8.8		11	16(14)	24	44	69	99	129	158
	Stainless steel R and high corrosion resistant steel HCR		50		6	11	15	27	43	62	81	99
			70		9	14	21	39	60	87	113	138
			80		11	16	24	44	69	99	129	158
fischer anchor rods and standard threaded rods, performance category C2												
Characteristic resistance $V_{Rk,s,C2}$	Steel zinc plated	Property class	5.8	[-]	-[4)]	-[4)]	14	27	43	62	-[4)]	-[4)]
			8.8		-[4)]	-[4)]	22	44	69	99	-[4)]	-[4)]
	Stainless steel R and high corrosion resistant steel HCR		50		-[4)]	-[4)]	14	27	43	62	-[4)]	-[4)]
			70		-[4)]	-[4)]	20	39	60	87	-[4)]	-[4)]
			80		-[4)]	-[4)]	22	44	69	99	-[4)]	-[4)]
Factor for the annular gap		α_{gap}		[-]	0,5 (1,0)[3)]							

[1)] Partial factors for performance category C1 or C2 see Table C14.2;
for fischer anchor rods FIS A / RG M the factor for steel ductility is 1,0

[2)] Values in brackets are valid for undersized threaded rods with smaller stress area A_s for hot dip galvanized standard threaded rods according to EN ISO 10684:2004+AC:2009.

[3)] Values in brackets are valid for filled annular gaps between the anchor rod and the through-hole in the attachment. It is necessary to use the fischer filling disc according to Annex A 1 and A 3.

[4)] No performance assessed.

Table C14.1: Characteristic resistance to **steel failure** under tension / shear loading for of **reinforcing bars (B500B)** under seismic action performance category **C1**

Nominal diameter of the bar		**ϕ**	**8**	**10**	**12**	**14**	**16**	**20**	**25**	**28**	**32**
Bearing capacity under tension load, steel failure[1)]											
Reinforcing bar B500B acc. to DIN 488-2:2009-08, performance category C1											
Characteristic resistance	$N_{Rk,s,C1}$	[kN]	27,1	42,3	61,0	83,5	108,5	169,5	265,1	332,6	434,1
Bearing capacity under shear load, steel failure without lever arm[1)]											
Reinforcing bar B500B acc. to DIN 488-2:2009-08, performance category C1											
Characteristic resistance	$V_{Rk,s,C1}$	[kN]	9,5	14,8	21,3	29,1	37,9	59,3	92,7	116,4	151,9

[1)] Partial factors for performance category C1 see Table C14.2

Table C14.2: **Partial factors** for **fischer anchor rods, standard threaded rods** and **reinforcing bars (B500B)** under seismic action performance category **C1 or C2**

Anchor rod / standard threaded rod				**M8**	**M10**	**M12**	**M16**	**M20**	**M24**	**M27**	**M30**
Nominal diameter of the bar			**ϕ**	**8**	**10**	**12**	**14**	**16**	**20**	**25**	**28**	**32**
Tension load, steel failure[1)]												
Partial factor $\gamma_{Ms,N}$	Steel zinc plated	Property class	5.8	[-]	1,50							
			8.8		1,50							
	Stainless steel R and high corrosion resistant steel HCR		50		2,86							
			70		1,87 / fischer HCR: 1,50 [2]							
			80		1,60							
	Reinforcing bar		B500B		1,40							
Shear load, steel failure[1)]												
Partial factor $\gamma_{Ms,V}$	Steel zinc plated	Property class	5.8	[-]	1,25							
			8.8		1,25							
	Stainless steel R and high corrosion resistant steel HCR		50		2,38							
			70		1,56 / fischer HCR: 1,25 [2]							
			80		1,33							
	Reinforcing bar		B500B		1,50							

[1)] In absence of other national regulations
[2)] Only admissible for high corrosion resistant steel HCR, with $f_{yk} / f_{uk} \geq 0,8$ and $A_5 > 12$ % (e.g. fischer anchor rods)

Table C15.1: Characteristic resistance to **combined pull-out** and concrete failure for **fischer anchor rods** and **standard threaded rods** in hammer drilled holes with **injection mortar FIS SB** or **resin capsule RSB** under seismic action performance category **C1**

Anchor rod / standard threaded rod				**M8**	**M10**	**M12**	**M16**	**M20**	**M24**	**M27**[1]	**M30**
Characteristic bond resistance, combined pullout and concrete cone failure											
Hammer-drilling with standard drill bit or hollow drill bit (dry or wet concrete; resin capsule RSB additional in water filled holes)											
Temperature range	I: 24 °C / 40 °C	$\tau_{Rk,C1}$	[N/mm²]	4,6	5,0	5,6	5,6	5,6	5,6	5,6	6,4
	II: 50 °C / 80 °C			4,3	4,6	5,6	5,6	5,6	5,6	5,3	6,0
	III: 72 °C / 120 °C			3,9	4,3	4,9	4,9	4,9	4,9	4,5	5,1
	IV: 90 °C / 150 °C			3,6	3,9	4,5	4,5	4,5	4,5	4,1	4,7
Installation factors											
Dry or wet concrete		γ_{inst}	[-]	1,0							
Water filled hole				1,2 [2]		1,0 [2]					

[1] Only use with injection mortar FIS SB.
[2] Only use with resin capsule RSB in water filled hole
.

Table C15.2: Characteristic resistance to **combined pull-out** and concrete failure for **reinforcing bars** in hammer drilled holes with **injection mortar FIS SB** under seismic action performance category **C1**

Nominal diameter of the bar			**ϕ**	**8**	**10**	**12**	**14**	**16**	**20**	**25**	**28**	**32**
Characteristic bond resistance, combined pullout and concrete cone failure												
Hammer-drilling with standard drill bit or hollow drill bit (dry or wet concrete)												
Temperature range	I: 24 °C / 40 °C	$\tau_{Rk,C1}$	[N/mm²]	3,2	4,3	4,5	4,5	5,3	4,5	4,5	4,5	5,1
	II: 50 °C / 80 °C			3,2	3,9	4,1	4,1	4,9	4,5	4,5	4,5	5,1
	III: 72 °C / 120 °C			2,8	3,6	3,8	3,8	4,5	4,1	4,1	4,1	4,7
	IV: 90 °C / 150 °C			2,5	3,2	3,4	3,4	4,1	3,8	3,8	3,8	4,3
Installation factors												
Dry or wet concrete		γ_{inst}	[-]	1,0								

Table C16.1: Characteristic resistance to **combined pull-out** and concrete failure for for **fischer anchor rods** and **standard threaded rods** in hammer drilled holes with **injection mortar FIS SB** under seismic action performance category **C2**

Anchor rod / standard threaded rod				**M12**	**M16**	**M20**	**M24**
Characteristic bond resistance, combined pullout and concrete cone failure							
Hammer-drilling with standard drill bit or hollow drill bit (dry or wet concrete)							
Temperature range	I: 24 °C / 40 °C	$\tau_{Rk,C2}$	[N/mm²]	4,5	3,2	2,6	3,0
	II: 50 °C / 80 °C			4,5	3,2	2,6	3,0
	III: 72 °C / 120 °C			3,9	2,7	2,3	2,6
	IV: 90 °C / 150 °C			3,6	2,5	2,1	2,4
Installation factors							
Dry or wet concrete		γ_{inst}	[-]	1,0			
Displacement-Factors for tension loading[1)]							
$\delta_{N,C2\ (DLS)}$-Factor		[mm/(N/mm²)]		0,09	0,10	0,11	0,12
$\delta_{N,C2\ (ULS)}$-Factor				0,15	0,17	0,17	0,18
Displacement-Factors for shear loading[2)]							
$\delta_{V,C2\ (DLS)}$-Factor		[mm/kN]		0,18	0,10	0,07	0,06
$\delta_{V,C2\ (ULS)}$-Factor				0,25	0,14	0,11	0,09

[1)] Calculation of effective displacement:

$\delta_{N,C2\ (DLS)} = \delta_{N,C2\ (DLS)\text{-Factor}} \cdot \tau$

$\delta_{N,C2\ (ULS)} = \delta_{N,C2\ (ULS)\text{-Factor}} \cdot \tau$

τ: acting bond strength under tension loading

[2)] Calculation of effective displacement:

$\delta_{V,C2\ (DLS)} = \delta_{V,C2\ (DLS)\text{-Factor}} \cdot V$

$\delta_{V,C2\ (ULS)} = \delta_{V,C2\ (ULS)\text{-Factor}} \cdot V$

V: acting shear loading