SUORITUSTASOILMOITUS

DoP W0003

fischer Power-Fast-ruuveille ja fischer-rakennusruuveille

FI

1. Tuotetyypin yksilöllinen tunniste: **DoP W0003**

2. Aiottu käyttötarkoitus (aiotut käyttötarkoitukset): **Puurakenteissa käytettävät itsekierteittävät ruuvit, katso lisäys, erityisesti liitteet 1, 2.**

3. Valmistaja: **fischerwerke GmbH & Co. KG, Klaus-Fischer-Str. 1, 72178 Waldachtal, Saksa**

4. Valtuutettu edustaja: **–**

5. Suoritustason pysyvyyden arvioinnissa ja varmentamisessa käytetty järjestelmä/käytetyt järjestelmät: **3**

6. Eurooppalainen arviointiasiakirja: **EAD 130118-00-0603**
   Eurooppalainen tekninen arviointi: **ETA-11/0027; 2019-01-02**
   Teknisestä arvioinnista vastaava laitos: **ETA-Danmark A/S**
   Ilmoitettu laitos/ilmoitetut laitokset: **0769 Karlsruher Institut für Technologie (KIT)**

7. Ilmoitettu suoritustaso/ilmoitetut suoritustasot:

Mekaaninen kestävyys ja vakaus (BWR 1), Käytön turvallisuus ja esteettömyys (BWR 4)

Mitat:	Liitteet 12-31
Tyypillinen tuottomomentti:	Liite 5
Taittokulma:	Liite 1
Tyypillinen vetäytymisparametri:	Liitteet 5,6
Tyypillinen kannan vetoparametri:	Liite 6
Tyypillinen vetolujuus:	Liite 3
Tyypillinen myötölujuus:	Liite 7
Tyypillinen vääntölujuus:	Liite 3
Lisäysmomentti:	Liite 3
Ruuvien välistys, pääty- ja kulmaetäisyydet, sekä puupohjaisen materiaalin vähimmäispaksuus	Liitteet 9,10,38
Pääosin aksiaalisesti kuormitettujen ruuvien ominaiskimmokerroin	Liite 7
Korroosionkesto	Liitteet 1,2,8-10,12-31

Turvallisuus tulipalon sattuessa (BWR 2)

Reaktio paloon:	Luokka (A1)

8. Asianmukainen tekninen asiakirja ja/tai tekninen erityisasiakirja: **–**

Edellä yksilöidyn tuotteen suoritustaso on ilmoitettujen suoritustasojen joukon mukainen. Tämä suoritustasoilmoitus on asetuksen (EU) N:o 305/2011 mukaisesti annettu edellä ilmoitetun valmistajan yksinomaisella vastuulla.

Valmistajan puolesta allekirjoittanut:

Dr.-Ing. Oliver Geibig, Toimitusjohtaja Liiketoimintayksikkö & Suunnittelu

Jürgen Grün, Toimitusjohtaja Kemia & Laatu

Tumlingen, 2021-01-16

Tämä suoritustasoilmoitus on laadittu useilla kielillä. Jos tulkinnasta syntyy erimielisyyttä, englanninkielinen versio on aina katsottava ensisijaiseksi.

Lisäys sisältää vapaaehtoisesti ilmoitettua ja täydentävää englanninkielistä tietoa, joka ylittää (kielestä riippumatta määritellyt) lakisääteiset vaatimukset.

II SPECIFIC PART OF THE EUROPEAN TECHNICAL ASSESSMENT

1 Technical description of product and intended use

Technical description of the product
"fischer Power-Fast" and "fischer construction screws" are self-tapping screws to be used in timber structures. "fischer Power-Fast" screws shall be threaded over a part or over the full length. "fischer construction screws" shall be threaded over a part of the length. The screws shall be produced from carbon steel wire for nominal diameters of 3,0 mm to 12,0 mm and from stainless steel wire for nominal diameters of 3,0 mm to 8,0 mm. The material specification of the stainless steel screws is deposited with ETA-Danmark. Where corrosion protection is required, the material or coating shall be declared in accordance with the relevant specification given in Annex A of EN 14592.

Geometry and Material
The nominal diameter (outer thread diameter), d, shall not be less than 3,0 mm and shall not be greater than 12,0 mm. The overall length, L, of screws shall not be less than 20 mm and shall not be greater than 600 mm. Other dimensions are given in Annex A1 to Annex A19.

The ratio of inner thread diameter to outer thread diameter d_i/d ranges from 0,59 to 0,69.

The screws are threaded over a minimum length ℓ_g of 4,0·d (i.e. $\ell_g \geq 4{,}0 \cdot d$).

The lead p (distance between two adjacent thread flanks) ranges from 0,50·d to 0,67·d.

No breaking of screws shall be observed at a bend angle, α, of less than $(45/d^{0,7} + 20)$ degrees.

The material specification of the of the stainless steel screws is deposited with ETA-Danmark.

2 Specification of the intended use in accordance with the applicable EAD

The screws are used for connections in load bearing timber structures between members of solid timber (softwood and hardwood). Furthermore, all kinds of processed timber products (all softwood and hardwood as well), such as glued laminated timber, cross-laminated timber, laminated veneer lumber, similar glued members, wood-based panels or steel.

Furthermore "fischer Power-Fast" screws with diameter of 6 mm, 8 mm, 10 mm and 12 mm may also be used for the fixing of heat insulation on rafters and on vertical facades.

Steel plates and wood-based panels except solid wood panels, Egger OSB Eurostrand 4 TOP and cross laminated timber shall only be located on the side of the screw head. The following wood-based panels may be used:

- Plywood according to EN 636 or ETA
- Particleboard according to EN 312 or ETA
- Oriented Strand Board, Type OSB/3 and OSB/4 according to EN 300 or ETA
- Fibreboard according to EN 622-2 and 622-3 or ETA (minimum density 650 kg/m³)
- Cement bonded particleboard according to ETA
- Solid wood panels according to EN 13353 and EN 13986, and cross laminated timber according to ETA
- Laminated Veneer Lumber according to EN 14374 or ETA
- Engineered wood products according to ETA if the ETA of the product includes provisions for the use of self-tapping screws, the provisions of the ETA of the engineered wood product apply

The screws shall be screwed into softwood without pre-drilling or after pre-drilling with a diameter not larger than the inner thread diameter for the length of the threaded part and with a maximum of the smooth shank diameter for the length of the smooth shank. The screws shall be driven into hardwood after pre-drilling with a suitable diameter according to section 3.11.

The screws are intended to be used in timber connections for which requirements for mechanical resistance and stability and safety in use in the sense of the Basic Works Requirements 1 and 4 of Regulation 305/2011 shall be fulfilled.

Form and dimensions of washers are given in Annex A20. Washers must be made of steel.

The design of the connections shall be based on the characteristic load-carrying capacities of the screws. The design capacities shall be derived from the characteristic capacities in accordance with Eurocode 5 or an appropriate national code (e.g. DIN 1052:2008-12). Regarding environmental conditions, national provisions at the building site shall apply.

The screws are intended for use for connections subject to static or quasi static loading.

The zinc-coated screws are for use in timber structures subject to the dry, internal conditions defined by the

service classes 1 and 2 of EN 1995-1-1:2008 (Eurocode 5).
The screws made of stainless steel meet the requirements of Eurocode 5 (EN 1995-1-1:2008), for use in structures subject to the wet conditions defined as service class 3.

The scope of the screws regarding resistance to corrosion shall be defined according to national provisions that apply at the installation site considering environmental conditions.

The provisions made in this European Technical Assessment are based on an assumed intended working life of the screws of 50 years.

The indications given on the working life cannot be interpreted as a guarantee given by the producer or Assessment Body, but are to be regarded only as a means for choosing the right products in relation to the expected economically reasonable working life of the works.

3 Performance of the product and references to the methods used for its assessment

Characteristic	Assessment of characteristic
3.1 Mechanical resistance and stability*) (BWR1)	
Tensile strength Screws made from carbon steel	Characteristic value $f_{tens,k}$: Screw d = 3,0 mm: 2,7 kN Screw d = 3,5 mm: 3,7 kN Screw d = 4,0 mm: 4,8 kN Screw d = 4,5 mm: 6,0 kN Screw d = 5,0 mm: 7,5 kN Screw d = 6,0 mm: 10,7 kN Screw d = 8,0 mm: 19,1 kN Screw d = 10,0 mm: 29,8 kN Screw d = 12,0 mm: 32,7 kN
Screws from stainless steel	Screw d = 3,0 mm: 1,6 kN Screw d = 3,5 mm: 2,1 kN Screw d = 4,0 mm: 2,8 kN Screw d = 4,5 mm: 3,5 kN Screw d = 5,0 mm: 4,3 kN Screw d = 6,0 mm: 6,2 kN Screw d = 8,0 mm: 13,0 kN
Insertion moment	Ratio of the characteristic torsional strength to the mean insertion moment: $f_{tor,k} / R_{tor,mean} \geq 1,5$
Torsional strength Screws from carbon steel	Characteristic value $f_{tor,k}$: Screw d = 3,0 mm: 1,3 Nm Screw d = 3,5 mm: 2,0 Nm Screw d = 4,0 mm: 3,0 Nm Screw d = 4,5 mm: 4,3 Nm Screw d = 5,0 mm: 6,0 Nm Screw d = 6,0 mm: 9,5 Nm Screw d = 8,0 mm: 25,0 Nm Screw d = 10,0 mm: 40,0 Nm Screw d = 12,0 mm: 55,0 Nm
Screws from stainless steel	Screw d = 3,0 mm: 0,9 Nm Screw d = 3,5 mm: 1,3 Nm Screw d = 4,0 mm: 1,9 Nm Screw d = 4,5 mm: 2,6 Nm Screw d = 5,0 mm: 3,7 Nm Screw d = 6,0 mm: 6,5 Nm Screw d = 8,0 mm: 16,0 Nm
3.2 Safety in case of fire (BWR2)	
Reaction to fire	The screws are made from steel classified as **Euroclass A1** in accordance with EN 13501-1 and Commission Delegated Regulation 2016/364.

Characteristic		Assessment of characteristic
3.7	**Sustainable use of natural resources (BR7)**	No Performance Assessed
3.8	**General aspects related to the performance of the product**	The screws have been assessed as having satisfactory durability and serviceability when used in timber structures using the timber species described in Eurocode 5 and subject to the conditions defined by service classes 1, 2 and 3
	Identification	See Annex A

*) See additional information in section 3.9 – 3.12.

**) In addition to the specific clauses relating to dangerous substances contained in this European technical Assessment, there may be other requirements applicable to the products falling within its scope (e.g. transposed European legislation and national laws, regulations and administrative provisions). In order to meet the provisions of the Construction Products Regulation, these requirements need also to be complied with, when and where they apply.

3.9 Mechanical resistance and stability

The load-carrying capacities for "fischer Power-Fast" and "fischer construction screws" are applicable to the wood-based materials mentioned in paragraph 1 even though the term timber has been used in the following.

The characteristic lateral load-carrying capacities and the characteristic axial withdrawal capacities of "fischer Power-Fast" and "fischer construction screws" screws should be used for designs in accordance with Eurocode 5 or an appropriate national code.

Pointside penetration length of the threaded part must be $\ell_{ef} \geq 4 \cdot d$, where d is the outer thread diameter of the screw. For the fixing of rafters, point side penetration must be at least 40 mm, $\ell_{ef} \geq 40$ mm.

ETA's for structural members may be considered if applicable.

For wood-based panels the relevant ETAs must be considered where applicable.

Lateral load-carrying capacity
The characteristic lateral load-carrying capacity of "fischer Power-Fast" and "fischer construction screws" screws shall be calculated according to EN 1995-1-1:2008 (Eurocode 5) using the outer thread diameter d as the nominal diameter of the screw. The contribution from the rope effect may be considered.

The characteristic yield moment shall be calculated from:

Screws from carbon steel for 3,0 mm $\leq$ d $\leq$ 5,0 mm and 12,0 mm:
$M_{y,k} = 0{,}15 \cdot 500\ (N/mm^2) \cdot d^{2,6}$ [Nmm]

Screws from carbon steel for 6,0 mm $\leq$ d $\leq$ 10,0 mm:
$M_{y,k} = 0{,}15 \cdot 600\ (N/mm^2) \cdot d^{2,6}$ [Nmm]

Screws from stainless steel for 3,0 mm < d < 6,0 mm:
$M_{y,k} = 0{,}15 \cdot 350\ (N/mm^2) \cdot d^{2,6}$ [Nmm]

Screws from stainless steel for d = 8,0 mm:
$M_{y,k} = 0{,}15 \cdot 400\ (N/mm^2) \cdot d^{2,6}$ [Nmm]

where
d outer thread diameter [mm]

The embedding strength for screws in non-pre-drilled holes arranged at an angle between screw axis and grain direction, $0° \leq \alpha \leq 90°$ is:

$$f_{h,k} = \frac{0{,}082 \cdot \rho_k \cdot d^{-0,3}}{2{,}5 \cdot \cos^2 \alpha + \sin^2 \alpha} \quad [N/mm^2]$$

and accordingly, for screws in pre-drilled holes:

$$f_{h,k} = \frac{0{,}082 \cdot \rho_k \cdot (1 - 0{,}01 \cdot d)}{2{,}5 \cdot \cos^2 \alpha + \sin^2 \alpha} \quad [N/mm^2]$$

Where
ρ_k characteristic timber density [kg/m³];
d outer thread diameter [mm];
α angle between screw axis and grain direction.

The embedding strength for screws arranged parallel to the plane surface of cross laminated timber, independent of the angle between screw axis and grain direction, $0° \leq \alpha \leq 90°$, may be calculated from:

$$f_{h,k} = 20 \cdot d^{-0,5} \quad [N/mm^2]$$

Where
d outer thread diameter [mm]

The embedding strength for screws in the plane surface of cross laminated timber should be assumed as for solid timber based on the characteristic density of the outer layer. If relevant, the angle between force and grain direction of the outer layer should be taken into account.

The direction of the lateral force shall be perpendicular to the screw axis and parallel to the plane surface of the cross laminated timber.

Axial withdrawal capacity
The characteristic axial withdrawal capacity of „fischer Power-Fast" and "fischer construction screws" in solid timber (softwood and ash, beech or oak hardwood), glued laminated timber (softwood and hardwood, ash, beech or oak), laminated veneer lumber (softwood or hardwood beech) or cross-laminated timber members at an angle of $0° \leq \alpha \leq 90°$ to the grain or in Egger Eurostrand OSB 4 TOP at an angle of $\alpha = 90°$ to the panel surface shall be calculated from:

$$F_{ax,\alpha,Rk} = n_{ef} \cdot k_{ax} \cdot f_{ax,k} \cdot d \cdot \ell_{ef} \cdot \left(\frac{\rho_k}{350}\right)^{0,8} \quad [N]$$

Where

$F_{ax,\alpha,RK}$ Characteristic withdrawal capacity of the connection at an angle α to the grain [N]

n_{ef} Effective number of screws according to EN 1995-1-1

For inclined screws: $n_{ef} = \max\left\{n^{0,9}\ ;\ 0{,}9 \cdot n\right\}$

k_{ax} Factor, taking into account the angle α between screw axis and grain direction

$k_{ax} = 1{,}0$ for $45° \leq \alpha < 90°$

$k_{ax} = 0{,}3 + \frac{0{,}7 \cdot \alpha}{45}$ for $0° \leq \alpha < 45°$

$f_{ax,k}$ Characteristic withdrawal parameter [N/mm²] for timber members

screw d = 3,0 mm:	$f_{ax,k}$ = 13,8 N/mm²
screw d = 3,5 mm:	$f_{ax,k}$ = 13,4 N/mm²
screw d = 4,0 mm:	$f_{ax,k}$ = 13,0 N/mm²
screw d = 4,5 mm:	$f_{ax,k}$ = 12,6 N/mm²
screw d = 5,0 mm:	$f_{ax,k}$ = 12,2 N/mm²
screw d = 6,0 mm:	$f_{ax,k}$ = 11,6 N/mm²
screw d ≥ 8,0 mm:	$f_{ax,k}$ = 10,0 N/mm²

for Egger Eurostrand OSB 4 TOP with minimum thickness t = 12 mm:
screw 5,0 mm ≤ d ≤ 10,0 mm: $f_{ax,k}$ = 10,0 N/mm²

d Outer thread diameter [mm]

ℓ_{ef} Point side penetration length of the threaded part according to EN 1995-1-1:2008 [mm]

α Angle between grain and screw axis [°]

ρ_k Characteristic density [kg/m³], for hardwoods the assumed characteristic density shall not exceed 730 kg/m³

For screws arranged under an angle between screw axis and grain direction of less than 90°, the minimum threaded penetration length is:

$\ell_{ef} \geq \min (4 \cdot d / \sin\alpha ; 20 \cdot d)$

For screws penetrating more than one layer of cross laminated timber, the different layers may be taken into account proportionally.

The axial withdrawal capacity is limited by the head pull-through capacity and the tensile strength of the screw.

For axially loaded screws in tension, where the external force is parallel to the screw axes, the rules in EN 1995-1-1, 8.7.2 (8) should be applied.

For inclined screws in timber-to-timber or steel-to-timber shear connections, where the screws are arranged under an angle 30° ≤ α ≤ 60° between the shear plane and the screw axis, the effective number of screws n_{ef} should be determined as follows:

For one row of n screws parallel to the load, the load-carrying capacity should be calculated using the effective number of fasteners n_{ef}, where

$$n_{ef} = \max\left\{n^{0,9} ; 0,9 \cdot n\right\}$$

and n is the number of inclined screws in a row. If crossed pairs of screws are used in timber-to-timber connections, n is the number of crossed pairs of screws in a row.

Note: For inclined screws as fasteners in mechanically jointed beams or columns or for the fixing of thermal insulation material, $n_{ef} = n$.

Head pull-through capacity

The characteristic head pull-through capacity of "fischer Power-Fast" and "fischer construction screws" shall be calculated according to EN 1995-1-1:2008 from:

$$F_{ax,\alpha,Rk} = n_{ef} \cdot f_{head,k} \cdot d_h^2 \cdot \left(\frac{\rho_k}{350}\right)^{0,8} \quad [N]$$

where:

$F_{ax,\alpha,Rk}$ characteristic head pull-through capacity of the connection at an angle $\alpha \geq 30°$ to the grain [N]

n_{ef} effective number of screws according to EN 1995-1-1

For inclined screws: $n_{ef} = \max\left\{n^{0,9} ; 0,9 \cdot n\right\}$ (see axial withdrawal capacity)

$f_{head,k}$ characteristic head pull-through parameter [N/mm²]

d_h diameter of the screw head [mm]

ρ_k characteristic density [kg/m³], for wood-based panels ρ_k = 380 kg/m³

Characteristic head pull-through parameter for screws with head diameter ≤ 21 mm in connections with timber and with wood-based panels with thicknesses above 20 mm:
$f_{head,k}$ = 12 N/mm²

Characteristic head pull-through parameter for screws with head diameter 21 mm < d_h ≤ 35 mm in connections with timber and with wood-based panels with thicknesses above 20 mm:
$f_{head,k}$ = 10 N/mm²

Characteristic head pull-through parameter for screws in connections with wood-based panels with thicknesses between 12 mm and 20 mm:
$f_{head,k}$ = 8 N/mm²

Screws in connections with wood-based panels with a thickness below 12 mm (minimum thickness of the wood based panels of 1,2·d with d as outer thread diameter):
$f_{head,k}$ = 8 N/mm²
limited to $F_{ax,\alpha,Rk}$ = 400 N

The head diameter d_h shall be greater than 1,8·d_s, where d_s is the smooth shank or the wire diameter. Otherwise the characteristic head pull-through capacity $F_{ax,\alpha,Rk}$ = 0.

Outer diameter of washers d_h > 35 mm shall not be considered.

The minimum thickness of wood-based panels according to the clause 3.9 must be observed.

In steel-to-timber connections the head pull-through capacity is not decisive.

Tensile capacity
The characteristic tensile strength $f_{tens,k}$ of "fischer Power-Fast" and "fischer construction screws" is:

Screws from carbon steel:
Screw d = 3,0 mm: 2,7 kN
Screw d = 3,5 mm: 3,7 kN
Screw d = 4,0 mm: 4,3 kN
Screw d = 4,5 mm: 5,5 kN
Screw d = 5,0 mm: 6,8 kN
Screw d = 6,0 mm: 10,7 kN
Screw d = 8,0 mm: 19,1 kN
Screw d = 10,0 mm: 29,8 kN
Screw d = 12,0 mm: 32,7 kN

Screws from stainless steel:
Screw d = 3,0 mm: 1,6 kN
Screw d = 3,5 mm: 2,1 kN
Screw d = 4,0 mm: 2,8 kN
Screw d = 4,5 mm: 3,5 kN
Screw d = 5,0 mm: 4,3 kN
Screw d = 6,0 mm: 6,2 kN
Screw d = 8,0 mm: 13,0 kN

For screws used in combination with steel plates, the tear-off capacity of the screw head should be greater than the tensile strength of the screw.

Compressive capacity
The characteristic compressive capacity $F_{ax,Rk}$ of fischer Power-Fast screws with the head fixed between two aluminium-, carbon steel- or stainless steel plates according to Annex D and the thread driven completely into timber perpendicular to the grain shall be calculated from:

$$F_{ax,Rk} = \min \left\{ f_{ax,k} \cdot d \cdot \ell_{ef} \cdot \left(\frac{\rho_k}{350} \right)^{0,8} ; \kappa_c \cdot N_{pl,k} \right\} \text{ [N]}$$

Where

$$\kappa_c = \begin{cases} 1 & \text{for } \bar{\lambda}_k \le 0,2 \\ \dfrac{1}{k + \sqrt{k^2 - \bar{\lambda}_k^2}} & \text{for } \bar{\lambda}_k > 0,2 \end{cases}$$

$$k = 0,5 \cdot \left[1 + 0,49 \cdot (\bar{\lambda}_k - 0,2) + \bar{\lambda}_k^2 \right]$$

The relative slenderness ratio shall be calculated from:

$$\bar{\lambda}_k = \sqrt{\frac{N_{pl,k}}{N_{ki,k}}}$$

Where

$$N_{pl,k} = \pi \cdot \frac{d_s^2}{4} \cdot f_{y,k} \quad \text{[N]}$$

is the characteristic value for the axial capacity in case of plastic analysis referred to the smooth shank cross-section.

$$N_{ki,k} = \frac{\pi^2 \cdot EI_S}{\ell_{ef}^2} \quad \text{[N]}$$

is the characteristic ideal elastic buckling load.

Characteristic yield strength for screws made of carbon steel:
$f_{y,k}$ = 1000 [N/mm²]
Characteristic yield strength for screws made of stainless steel:
$f_{y,k}$ = 500 [N/mm²]
Modulus of elasticity for screws made of carbon steel:
E_s = 210000 [N/mm²]
Modulus of elasticity for screws made of stainless steel:
E_s = 160000 [N/mm²]
Second moment of area:

$$I_S = \frac{\pi}{64} \cdot d_s^4 \quad \text{[mm}^4\text{]}$$

d_s = smooth shank diameter [mm]
$\ell_{ef} = 0,7 \cdot \ell$ buckling length [mm]

ℓ = free screw length protruding from the timber member including the screw head [mm]
Note: When determining design values of the compressive capacity it should be considered that $f_{ax,d}$ is to be calculated using k_{mod} and γ_M for timber according to EN 1995 while $N_{pl,d}$ is calculated using $\gamma_{M,1}$ for steel buckling according to EN 1993.

Combined laterally and axially loaded screws
For screwed connections subjected to a combination of axial load and lateral load, the following expression should be satisfied:

$$\left(\frac{F_{ax,Ed}}{F_{ax,Rd}} \right)^2 + \left(\frac{F_{la,Ed}}{F_{la,Rd}} \right)^2 \le 1$$

where
$F_{ax,Ed}$ axial design load of the screw
$F_{la,Ed}$ lateral design load of the screw
$F_{ax,Rd}$ design load-carrying capacity of an axially loaded screw
$F_{la,Rd}$ design load-carrying capacity of a laterally loaded screw

Slip modulus
The axial slip modulus K_{ser} of a screw for the serviceability limit state should be taken independent of angle α to the grain as:

$$C = K_{ser} = 780 \cdot d^{0,2} \cdot \ell_{ef}^{0,4} \quad \text{[N/mm]}$$

Where
d outer thread diameter [mm]
ℓ_{ef} penetration length in the structural member [mm]

Thermal insulation material on top of rafters
"fischer Power-Fast" screws with an outer thread diameter of d = 6 mm, 8 mm, 10 mm and 12 mm may be used for the fixing of thermal insulation material on top of rafters.

The thickness of the insulation ranges up to 400 mm. The rafter insulation must be placed on top of solid timber or glued laminated timber rafters or cross-laminated timber members and be fixed by battens placed parallel to the rafters or by wood-based panels on top of the insulation layer. The insulation of vertical facades is also covered by the rules given here.

Screws must be screwed in the rafter through the battens or panels and the insulation without pre-drilling in one sequence.
The angle α between the screw axis and the grain direction of the rafter should be between 30° and 90°.

The battens must be from solid timber (softwood) according to EN 338:2003-04. The minimum thickness of the battens is 80 mm and the minimum width 100 mm for screws with outer thread diameter d = 12 mm. The minimum thickness of the battens is 40 mm and the minimum width 60 mm for screws with outer thread diameter d = 10 mm. For screws with outer thread diameter d = 6 mm and 8 mm the minimum thickness of the battens is 30 mm and the minimum width 50 mm.

Alternatively, to the battens, boards with a minimum thickness of 20 mm from plywood according to EN 636, particle board according to EN 312, oriented strand board OSB/3 and OSB/4 according to EN 300 or ETA and solid wood panels according to EN 13353 may be used.

The rafter consists of solid timber (softwood) according to EN 338, glued laminated timber according to EN 14081, cross-laminated timber, laminated veneer lumber according to EN 14374 or to ETA or similar glued members according to ETA and has a minimum width of 60 mm.

The insulation must comply with a ETA.

The insulation must have a minimum compressive stress of $\sigma_{10\%}$ = 0,05 N/mm² at 10 % deformation according to EN 826:1996-05.

The analysis of the fixing of the insulation and battens or boards, respectively, may be carried out using the static model in Annex B. The battens or boards, respectively, must have sufficient strength and stiffness. The maximum pressure between the battens or boards, respectively, and the insulation shall not exceed $1{,}1 \cdot \sigma_{10\%}$.

The characteristic axial withdrawal capacity of the screws for rafter or facade insulation shall be calculated from:

$$F_{ax,\alpha,Rk} = \min \begin{cases} k_{ax} \cdot f_{ax,k} \cdot d \cdot \ell_{ef} \cdot k_1 \cdot k_2 \left(\frac{\rho_k}{350}\right)^{0,8} \\ f_{head,k} \cdot d_h^2 \cdot \left(\frac{\rho_k}{350}\right)^{0,8} \\ f_{tens,d} \end{cases} \quad [N]$$

where

$F_{ax,\alpha,RK}$	Characteristic withdrawal capacity of the connection at an angle α to the grain [N]
k_{ax}	Factor, taking into account the angle α between screw axis and grain direction k_{ax} = 1,0 for 45° ≤ α < 90° $k_{ax} = 0{,}3 + \frac{0{,}7 \cdot \alpha}{45}$ for 0° ≤ α < 45°
$f_{ax,k}$	Characteristic withdrawal parameter [N/mm²]
D	Outer thread diameter [mm]
ℓ_{ef}	Point side penetration length of the threaded part according to EN 1995-1-1:2008 [mm]
α	Angle between grain and screw axis (α ≥ 30°)
k_1	min {1; 220/t_{HI}}
k_2	min {1; $\sigma_{10\%}$/0,12}
t_{HI}	Thickness of the thermal insulation [mm]
$\sigma_{10\%}$	Compressive stress of the thermal insulation under 10 % deformation [N/mm²] $\sigma_{10\%} \geq$ 0,05 N/mm²
$f_{head,k}$	Characteristic head pull-through parameter [N/mm²]
d_h	Outer diameter of the screw head [mm]
ρ_k	Characteristic density [kg/m³]
$f_{tens,d}$	Characteristic tensile capacity of the screw [N]

Friction forces shall not be considered for the design of the characteristic axial withdrawal capacity of the screws.

The anchorage of wind suction forces as well as the bending stresses of the battens or the boards, respectively, shall be considered in design. Additional screws perpendicular to the grain of the rafter (angle α = 90°) may be arranged if necessary.

Screws for the anchorage of rafter insulation shall be arranged according to Annex B.

The maximum screw spacing is e_S = 1,75 m.

3.10 Aspects related to the performance of the product

3.10.1 Corrosion protection in service class 1, 2 and 3.
The fischer Power-Fast and fischer construction screws are produced from carbon wire. Screws made from carbon steel

are electrogalvanised and yellow or blue chromate. The mean thickness of the zinc coating is 5µm.

The material specification of the stainless steel screws is deposited with ETA-Danmark.

3.11 General aspects related to the intended use of the product

The screws are manufactured in accordance with the provisions of the European Technical Assessment using the automated manufacturing process and laid down in the technical documentation.

The installation shall be carried out in accordance with Eurocode 5 or an appropriate national code unless otherwise is defined in the following. Instructions from fischerwerke GmbH & Co. KG should be considered for installation.

The screws are used for connections in load bearing timber structures between members of solid timber (softwood and hardwood), glued laminated timber (softwood and hardwood), cross-laminated timber (minimum diameter d = 6,0 mm, softwood and hardwood)), laminated veneer lumber (softwood and hardwood), similar glued members (softwood and hardwood), wood-based panels or steel members.

The screws may be used for connections in load bearing timber structures with structural members according to an associated ETA, if according to the ETA of the structural member a connection in load bearing timber structures with screws according to an ETA is allowed.

Furthermore, the screws with diameters between 6 mm and 12 mm may also be used for the fixing of insulation on top of rafters or at vertical facades.

A minimum of two screws should be used for connections in load bearing timber structures. A single screw may be used in structural connections if the penetration length of the screw including an unthreaded part of the shank is at least 20 · d and the screw is only axially loaded. The load-bearing capacity of the single screw in this case shall be reduced by 50 %.

A single screw per connection may also be used, if the member is fixed with at least two screws and the screws are used for the fixing of boards, battens and wind braces, or for the fixing of rafters, purlins or similar on main beams or top plates.

The minimum penetration depth in structural members made of solid, glued or cross-laminated timber is 4·d.

Wood-based panels - except Egger Eurostrand OSB 4 TOP - and steel plates should only be arranged on the side of the screw head. The minimum thickness of wood-based panels should be 1,2·d. Furthermore, the minimum thickness for following wood-based panels should be:

- Plywood, Fibreboards: 6 mm
- Particleboards, OSB, Cement Particleboards: 8 mm
- Solid wood panels: 12 mm

For structural members according to ETA's the terms of the ETA's must be considered.

If screws with an outer thread diameter $d \geq 8$ mm are used in load bearing timber structures, the structural solid or glued laminated timber, laminated veneer lumber and similar glued members must be from spruce, pine or fir. This does not apply for screws in pre-drilled holes.

The minimum angle between the screw axis and the grain direction is $\alpha = 0°$.

The screws shall be driven into softwood without predrilling or after pre-drilling. The screws shall be driven into hardwood with a maximum characteristic density of 730 kg/m³ after predrilling.

The drill hole diameters are:

Outer thread diameter	Drill hole diameter	
	Softwood	Hardwood
4,0	2,5	3,0
4,5	2,5	3,0
5,0	3,0	3,0
6,0	4,0	4,0
8,0	5,0	6,0
10,0	6,0	7,0
12,0	7,0	8,0

The hole diameter in steel members must be predrilled with a suitable diameter.

Only the equipment prescribed by fischerwerke GmbH & Co. KG shall be used for driving the screws.

In connections with screws with countersunk head according to Annexes A1, A5, A6, A7, A11, A13 and A18, the head must be flush with the surface of the connected structural member. A deeper countersink is not allowed.

Screws from carbon steel and stainless steel with countersunk head according to Annex A1, A2, A5, A6, A7, A11, A13, A14 and A18 may be used together with washers according to Annex A20. Washers according to EN ISO 7094 may be used together with washers according to Annex A20.

Screws according to Annex A3, A4, A8, A9, A10, A12 A16, A17 and A19 may be used together with washers according to EN ISO 7094.

Washers from carbon steel should be used with screws from carbon steel and screws from stainless steel with washers from stainless steel. Washers should have a full bearing area.

For structural timber members, minimum spacing and distances for screws in predrilled holes are given in EN 1995-1-1:2008 (Eurocode 5) clause 8.3.1.2 and table 8.2 as for nails in predrilled holes. Here, the outer thread diameter d must be considered.

For screws in non-predrilled holes, minimum spacing and distances are given in EN 1995-1-1:2008 (Eurocode 5) clause 8.3.1.2 and table 8.2 as for nails in non-predrilled holes.

Alternatively, minimum distances and spacing for exclusively axially loaded "fischer Power-Fast" screws in non-predrilled holes in members of solid timber (softwood and hardwood), glued laminated timber or similar glued products (softwood and hardwood) with a minimum thickness $t = 12 \cdot d$ and a minimum width of $8 \cdot d$ or 60 mm, whichever is the greater, may be taken as:

Spacing a_1 parallel to the grain	$a_1 = 5 \cdot d$
Spacing a_2 perpendicular to the grain	$a_2 = 5 \cdot d$
Distance $a_{3,c}$ from centre of the screw-part in timber to the end grain	$a_{3,c} = 9 \cdot d$
Distance $a_{4,c}$ from centre of the screw-part in timber to the edge	$a_{4,c} = 4 \cdot d$

Spacing a_2 perpendicular to the grain may be reduced from $5 \cdot d$ to $2{,}5 \cdot d$, if the condition $a_1 \cdot a_2 \geq 25 \cdot d^2$ is fulfilled.

For Douglas fir members minimum spacing and distances parallel to the grain shall be increased by 50%.

Minimum distances from loaded or unloaded ends must be $15 \cdot d$ for screws in non-predrilled holes with outer thread diameter $d \geq 8$ mm and timber thickness $t < 5 \cdot d$.

Minimum distances from the unloaded edge perpendicular to the grain may be reduced to $3 \cdot d$ also for timber thickness $t < 5 \cdot d$, if the spacing parallel to the grain and the end distance is at least $25 \cdot d$.

Unless specified otherwise in the technical specification (ETA or hEN) of cross laminated timber, minimum distances and spacing for screws in the plane surface of cross laminated timber members with a minimum thickness $t = 10 \cdot d$ may be taken as (see Annex C):

Spacing a_1 parallel to the grain	$a_1 = 4 \cdot d$
Spacing a_2 perpendicular to the grain	$a_2 = 2{,}5 \cdot d$
Distance $a_{3,c}$ from centre of the screw-part in timber to the unloaded end grain of the plane surface	$a_{3,c} = 6 \cdot d$
Distance $a_{3,t}$ from centre of the screw-part in timber to the loaded end grain of the plane surface	$a_{3,t} = 6 \cdot d$
Distance $a_{4,c}$ from centre of the screw-part in timber to the unloaded edge	$a_{4,c} = 2{,}5 \cdot d$
Distance $a_{4,t}$ from centre of the screw-part in timber to the loaded edge	$a_{4,t} = 6 \cdot d$

Unless specified otherwise in the technical specification (ETA or hEN) of cross laminated timber, minimum distances and spacing for screws in the edge surface of cross laminated timber members with a minimum thickness $t = 10 \cdot d$ and a minimum penetration depth perpendicular to the edge surface of $10 \cdot d$ may be taken as (see Annex C):

Spacing a_1 parallel to the CLT plane surface	$a_1 = 10 \cdot d$
Spacing a_2 perpendicular to the CLT plane surface	$a_2 = 4 \cdot d$
Distance $a_{3,c}$ from centre of the screw-part in timber to the unloaded end	$a_{3,c} = 7 \cdot d$
Distance $a_{3,t}$ from centre of the screw-part in timber to the loaded end	$a_{3,t} = 12 \cdot d$
Distance $a_{4,c}$ from centre of the screw-part in timber to the unloaded edge	$a_{4,c} = 3 \cdot d$
Distance $a_{4,t}$ from centre of the screw-part in timber to the loaded edge	$a_{4,t} = 6 \cdot d$

For a crossed screw couple the minimum spacing between the crossing screws is $1{,}5 \cdot d$.

Minimum thickness for structural members is t = 24 mm for screws with outer thread diameter d < 8 mm, t = 30 mm for screws with outer thread diameter d = 8 mm, t = 40 mm for screws with outer thread diameter d = 10 mm and t = 80 mm for screws with outer thread diameter d = 12 mm.

4 Attestation and verification of constancy of performance (AVCP)

4.1 AVCP system

According to the decision 97/176/EC of the European Commission1, as amended, the system(s) of assessment and verification of constancy of performance (see Annex V to Regulation (EU) No 305/2011) is 3.

Screw sizes and material

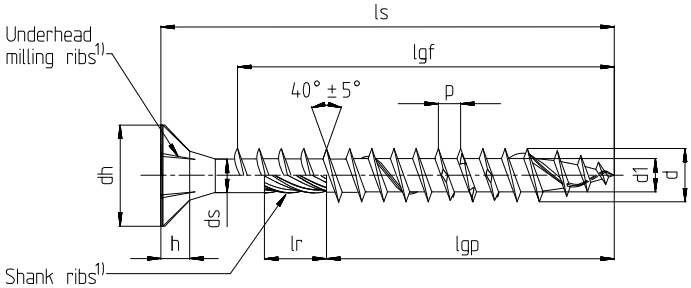

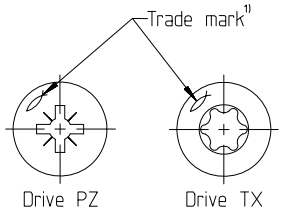

1) optional

Power-Fast self-drilling screw - Countersunk head with full- or partial thread

- Carbon Steel
- Possible surface treatments: yellow or blue zinc-plated, blue zinc-plated ≥12µm, bonus-zinced, burnished, nickel-/, brass plated

Nominal diameter		3,0	3,5	4,0	4,5	5,0	6,0	
d	Outer diameter	3,00	3,50	4,00	4,50	5,00	6,00	
	Allow. deviation	±0,30						
d_1	Core diameter	2,00	2,20	2,50	2,70	3,00	4,00	
	Allow. deviation	-0,25 / +0,10				±0,20		
d_h	Head diameter	6,00	7,00	8,00	9,00	10,00	12,00	
	Allow. deviation	-0,50 / +0,10						
d_s	Shank diameter	2,25	2,60	2,90	3,25	3,60	4,20	
	Allow. deviation	-0,30 / +0,10						
h	Head height	1,90	2,10	2,50	2,70	3,00	3,80	
p	Thread pitch	1,50	1,80	2,00	2,20	2,50	3,00-4,50	
	Allow. deviation	±10%						
l_r 1)	Shank ribs length	3,75	4,25	4,75	5,50	6,00	7,00	
	Allow. deviation	±0,75			±1,00			
Drive TX		10		20		20 25	30	
Drive PZ		1	2				3	

Screw length l_s			Standard thread length | l_{gf} = Full thread | l_{gp} =Partial thread | Tolerance: ± 2,0 2)													
Nominal length	min	max	l_{gf}	l_{gp}	l_{gf}	l_{gp}	l_{gf}	l_{gp}	l_{gf}	l_{gp}	l_{gf}	l_{gp}	l_{gf}	l_{gp}		
20	18,95	21,05	16		16		16		16							
25	23,75	26,25	21		21	18	20	18	20							
30	28,75	31,25	26	18	26	18	25	18	25	18	24					
35	33,50	36,50	31	24	31	24	30	24	30	24	29	24	28			
40	38,50	41,50	36	24	36	24	35	24	35	24	34	24	33	24		
45	43,50	46,50	41	30	41	30	40	30	40	30	39	30	38	30		
50	48,50	51,50			46	30	45	30	45	30	44	30	43	30		
55	53,50	56,50					50	36	50	36	49	36	48			
60	58,50	61,50						36		36		36	53	36		
70	68,50	71,50						42		42		42	63	42		
80	78,50	81,50						50		50		50	73	50		
90	88,25	91,75										60		60		
100	98,25	101,75										60		60		
110	108,25	111,75										70		70		
120	118,25	121,75										70		70		
in steps of 10mm																
130-300	l_s –2,00	l_s +2,00												70		

All sizes in mm

- Intermediate lengths at l_s are possible
- Screws with partial thread > 50 mm length with shank ribs
- Threaded lengths between $4 \times d \leq l_g \leq l_{gmax}$ are possible

2) 10mm ≥ l_g ≤18mm ≙ ±1,5mm
18mm ≥ l_g ≤ 30mm ≙ ±1,7mm

fischer Power-Fast and Construction Screws	
Sizes and Material	

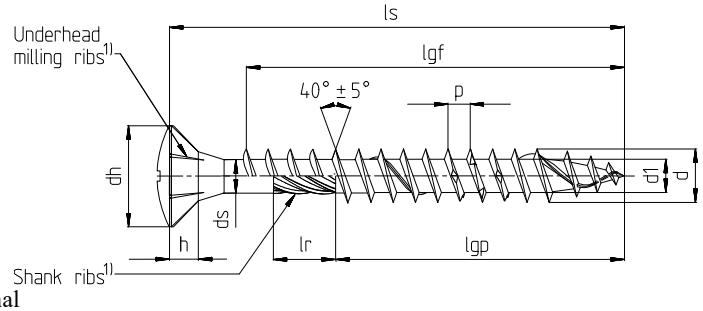

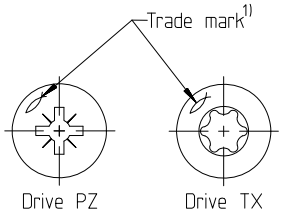

1) optional

Power-Fast self-drilling screw - Raised countersunk head with full- or partial thread

- Carbon steel
- Possible surface treatments: yellow or blue-zinc-plated, blue zinc-plated ≥12µm, bonus- zinced, burnished, nickel-/brass plated

Nominal diameter		3,0	3,5	4,0	4,5	5,0	6,0	
d	Outer diameter	3,00	3,50	4,00	4,50	5,00	6,00	
	Allow. deviation	±0,30						
d_1	Core diameter	2,00	2,20	2,50	2,70	3,00	4,00	
	Allow. deviation	-0,25 / +0,10				±0,20		
d_h	Head diameter	6,00	7,00	8,00	9,00	10,00	12,00	
	Allow. deviation	-0,50 / +0,10						
d_s	Shank diameter	2,25	2, 60	2,90	3,25	3,60	4,20	
	Allow. deviation	-0,30 / +0,10						
h	Head height	1,90	2,10	2,50	2,70	3,00	3,40	
p	Thread pitch	1,50	1,80	2,00	2,20	2,50	3,00-4,50	
	Allow. deviation	±10%						
l_r1)	Shank ribs length	3,75	4,25	4,75	5,50	6,00	7,00	
	Allow. deviation	±0,75			±1,00			
Drive TX		10		20		20 / 25	30	
Drive PZ		1	2				3	

Screw length l_s			Standard thread length | l_{gf} = Full thread | l_{gp} =Partial thread | Tolerance: ± 2,0[2]													
Nominal length	min	max	l_{gf}	l_{gp}	l_{gf}	l_{gp}	l_{gf}	l_{gp}	l_{gf}	l_{gp}	l_{gf}	l_{gp}	l_{gf}	l_{gp}		
20	18,95	21,05	16		16		16		16							
25	23,75	26,25	21		21	18	20	18	20							
30	28,75	31,25	26	18	26	18	25	18	25	18	24					
35	33,50	36,50	31	24	31	24	30	24	30	24	29	24	28			
40	38,50	41,50	36	24	36	24	35	24	35	24	34	24	33	24		
45	43,50	46,50	41	30	41	30	40	30	40	30	39	30	38	30		
50	48,50	51,50			46	30	45	30	45	30	44	30	43	30		
55	53,50	56,50					50	36	50	36	49	36	48			
60	58,50	61,50						36		36		36	53	36		
70	68,50	71,50						42		42		42	63	42		
80	78,50	81,50						50		50		50	73	50		

All sizes in mm

- Intermediate lengths at l_s are possible
- Screws with partial thread > 50 mm length with shank ribs
- Threaded lengths between $4 \times d \leq l_g \leq l_{gmax}$ are possible

2) 10mm ≥ l_g ≤18mm ≙ ±1,5mm
18mm ≥ l_g ≤ 30mm ≙ ±1,7mm

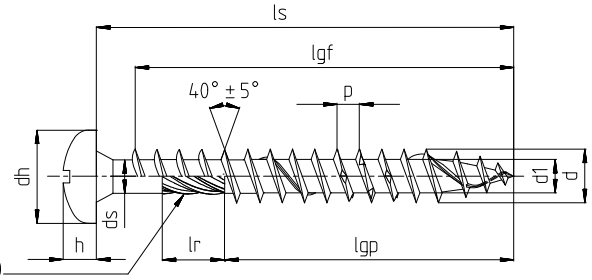

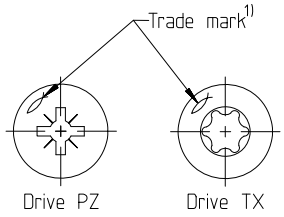

1) optional

Power-Fast self-drilling screw - Pan head with full- or partial thread

- Carbon steel
- Possible surface treatments: yellow or blue zinc-plated, blue zinc-plated ≥12µm, bonus- zinced, burnished, nickel-/brass plated

Nominal diameter		**3,0**	**3,5**	**4,0**	**4,5**	**5,0**	**6,0**	
d	Outer diameter	3,00	3,50	4,00	4,50	5,00	6,00	
	Allow. deviation	±0,30						
d_1	Core diameter	2,00	2,20	2,50	2,70	3,00	4,00	
	Allow. deviation	-0,25 / +0,10				±0,20		
d_h	Head diameter	6,00	7,00	8,00	9,00	10,00	12,00	
	Allow. deviation	-0,50 / +0,10						
d_s	Shank diameter	2,25	2,60	2,90	3,25	3,60	4,20	
	Allow. deviation	-0,30 / +0,10						
h	Head height	2,30	2,50	2,90	3,10	3,40	3,80	
p	Thread pitch	1,50	1,80	2,00	2,20	2,50	3,00-4,50	
	Allow. deviation	±10%						
l_r 1)	Shank ribs length	3,75	4,25	4,75	5,50	6,00	7,00	
	Allow. deviation	±0,75			±1,00			
Drive TX		10		20		20 / 25	30	
Drive PZ		1	2				3	

Screw length l_s			Standard thread length | l_{gf} = Full thread | l_{gp} =Partial thread | Tolerance: ± 2,0 2)													
Nominal length	min	max	l_{gf}	l_{gp}	l_{gf}	l_{gp}	l_{gf}	l_{gp}	l_{gf}	l_{gp}	l_{gf}	l_{gp}	l_{gf}	l_{gp}		
20	18,95	21,05	16		16		16		16							
25	23,75	26,25	21		21	18	20	18	20							
30	28,75	31,25	26	18	26	18	25	18	25	18	24					
35	33,50	36,50	31	24	31	24	30	24	30	24	29	24	28			
40	38,50	41,50		24	36	24	35	24	35	24	34	24	33	24		
45	43,50	46,50		30		30	40	30	40	30	39	30	38	30		
50	48,50	51,50				30	45	30	45	30	44	36	43	30		
55	53,50	56,50					50	36	50	36	49	36	48			
60	58,50	61,50						36		36		42	53	36		
70	68,50	71,50						42		42		50	63	42		
80	78,50	81,50						50		50		50	73	50		
90	88,25	91,75										60		60		
100	98,25	101,75										60		60		

All sizes in mm

- Intermediate lengths at l_s are possible
- Screws with partial thread > 50 mm length with shank ribs
- Threaded lengths between $4 \times d \leq l_g \leq l_{gmax}$ are possible

2) 10mm ≥ l_g ≤18mm ≙ ±1,5mm
18mm ≥ l_g ≤ 30mm ≙ ±1,7mm

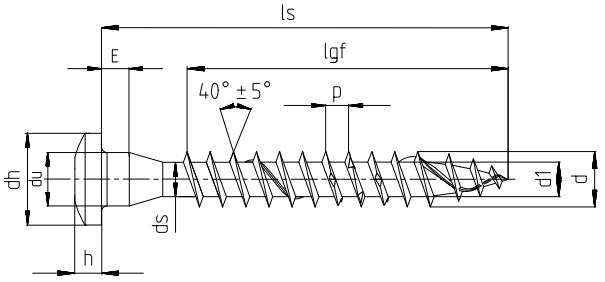

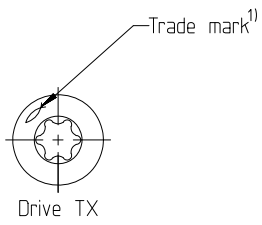

1) optional

Power-Fast self-drilling screw - Wood connector screw with full thread

- Carbon steel
- Possible surface treatments: yellow or blue zinc-plated, Bonus-zinced, blue zinc-plated ≥12µm

Nominal diameter		**5,0**							
d	Outer diameter	5,00							
	Allow. deviation	-0,30							
d_1	Core diameter	3,00							
	Allow. deviation	±0,20							
d_u	Underhead diameter	5,00							
	Allow. deviation	-0,35							
d_h	Head diameter	8,25							
	Allow. deviation	±0,40							
E	Height	2,50							
	Allow. deviation	±0,30							
h	Head height	2,60							
p	Thread pitch	2,50							
	Allow. deviation	±10%							
Drive TX		20	25						

Screw length l_s			Standard thread length | l_{gf} = Full thread | l_{gp} =Partial thread | Tolerance: ± 2,0[2)]															
Nominal length	min	max	l_{gf}	l_{gp}														
20	18,95	21,05	14															
25	23,75	26,25	19															
30	28,75	31,25	24															
35	33,50	36,50	29															
40	38,50	41,50	34															
45	43,50	46,50	39															
50	48,50	51,50	44															
55	53,50	56,50	49															
60	58,50	61,50	54															
70	68,50	71,50	64															
80	78,50	81,50	74															

All sizes in mm

- Intermediate lengths at l_s are possible
- Threaded lengths between $4 \times d \leq l_g \leq l_{gmax}$ are possible

2) $10mm \geq l_g \leq 18mm \triangleq \pm 1,5mm$
$18mm \geq l_g \leq 30mm \triangleq \pm 1,7mm$

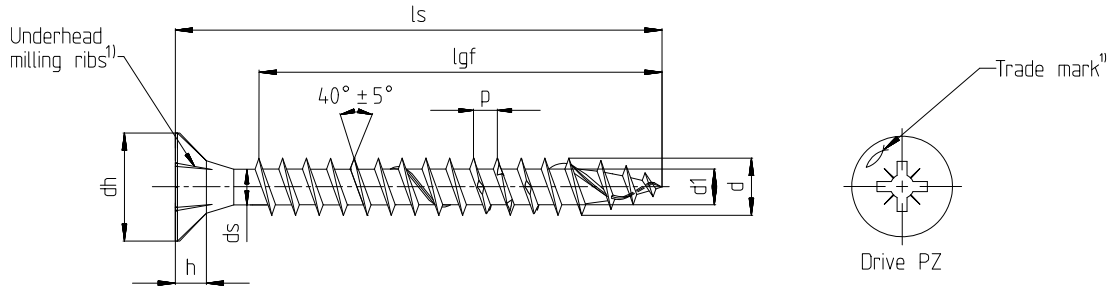

1) optional

Power-Fast self-drilling screw - Small countersunk head with full thread

- Carbon steel
- Possible surface treatments: yellow or blue zinc-plated, blue zinc-plated ≥12µm

Nominal diameter		**3,0**	**3,5**	**4,0**				
d	Outer diameter	3,00	3,50	4,00				
	Allow. deviation	±0,30						
d_1	Core diameter	2,00	2,20	2,50				
	Allow. deviation	-0,25 / +0,10						
d_h	Head diameter	5,00	6,00	7,00				
	Allow. deviation	-0,50 / +0,10						
h	Head height	1,90	2,10	2,50				
p	Thread pitch	1,50	1,80	2,00				
	Allow. deviation	±10%						
Drive PZ		1	2					

Screw length l_s			Standard thread length | l_{gf} = Full thread | l_{gp} =Partial thread | Tolerance: ± 2,0[2)]													
Nominal length	min	max	l_{gf}	l_{gp}	l_{gf}	l_{gp}	l_{gf}	l_{gp}								
20	18,95	21,05	16		16		16									
25	23,75	26,25	21		21		20									
30	28,75	31,25	26													

All sizes in mm

- Intermediate lengths at l_s are possible
- Threaded lengths between $4 \times d \leq l_g \leq l_{gmax}$ are possible

2) 10mm ≥ l_g ≤18mm ≙ ±1,5mm
18mm ≥ l_g ≤ 30mm ≙ ±1,7mm

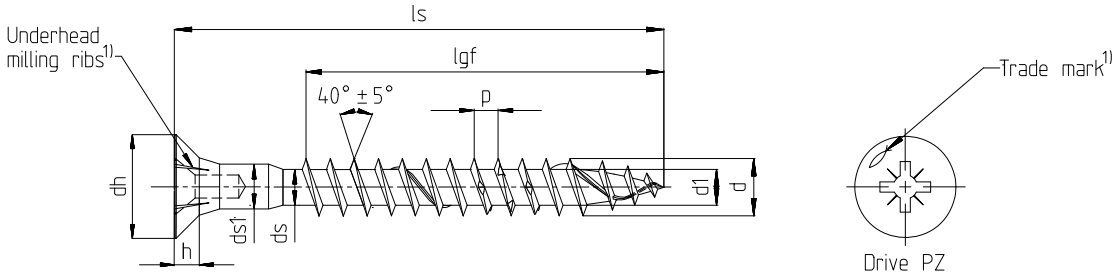

1) optional

Power-Fast self-drilling screw - Countersunk headhole screw with full thread

- Carbon steel
- Possible surface treatments: blue zinc-plated, blue zinc-plated ≥12µm

Nominal diameter		**4,0**	**4,5**	**5,0**	**6,0**			
d	Outer diameter	4,00	4,50	5,00	6,00			
	Allow. deviation	±0,30						
d_1	Core diameter	2,50	2,70	3,00	4,00			
	Allow. deviation	-0,25 / +0,10		±0,20				
d_h	Head diameter	8,00	9,00	10,00	12,00			
	Allow. deviation	-0,50 / +0,10						
d_s	Shank diameter	2,90	3,25	3,60	4,30			
	Allow. deviation	-0,30 / +0,10						
h	Head height	2,50	2,70	3,00	3,80			
p	Thread pitch	2,00	2,20	2,50	3,00-4,50			
	Allow. deviation	±10%						
d_{s1}	Shank diameter	3,70	3,85	4,50	4,20			
	Allow. deviation	-0,10						
Drive PZ		2			3			

Screw length l_s			Standard thread length | l_{gf} = Full thread | l_{gp} =Partial thread | Tolerance: ± 2,0[2)]													
Nominal length	min	max	l_{gf}	l_{gp}	l_{gf}	l_{gp}	l_{gf}	l_{gp}	l_{gf}	l_{gp}						
25	23,75	26,25	17,5													
27	25,75	28,25	19,5													
30	28,75	31,25	22,5		19											
35	33,50	36,50	27,5		24											
40	38,50	41,50	32,5		29		29									
45	43,50	46,50	37,5		34		34									
50	48,50	51,50	42,5		39		39		41							
55	53,50	56,50	47,5		44		44		46							
60	58,50	61,50	50,0		49		49		51							
70	68,50	71,50			59		60		60							
80	78,50	81,50			59		60		60							
90	88,25	91,75			59		60		60							
100	98,25	101,75					60		60							

All sizes in mm

- Intermediate lengths at l_s are possible
- Threaded lengths between $4 \times d \leq l_g \leq l_{gmax}$ are possible

[2)] $10mm \geq l_g \leq 18mm \triangleq \pm 1,5mm$
$18mm \geq l_g \leq 30mm \triangleq \pm 1,7mm$

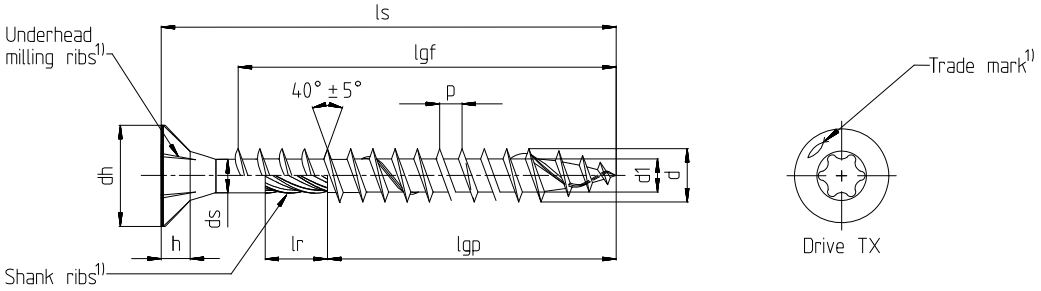

1) optional

Power-Fast wood construction screw - Countersunk head with full- or partial thread

- Carbon steel
- Possible surface treatments: yellow or blue zinc-plated, blue zinc-plated ≥12µm, bonus-zinced

Nominal diameter		6,0	8,0	10,0	12,0			
d	Outer diameter	6,00	8,00	10,00	12,00			
	Allow. deviation	±0,30		±0,40	±0,50			
d_1	Core diameter	4,00	5,40	6,40	7,60			
	Allow. deviation	±0,20			±0,30			
d_h	Head diameter	12,00	14,40	18,40	22,40			
	Allow. deviation	-0,50 /+0,10	±0,40		±0,50			
d_s	Shank diameter	4,30	5,90	7,10	8,30			
	Allow. deviation	-0,30 /+0,10	±0,20					
h	Head height	3,80	5,10	6,10	7,20			
p	Thread pitch	3,00-4,50	6,00	7,50				
	Allow. deviation	±10%						
l_r 1)	Shank ribs length	8,00	13,00					
	Allow. deviation	-2,00						
Drive TX		30	40		50			

Standard thread length | l_{gf} = Full thread | l_{gp}=Partial thread | Tolerance: ± 2,0

Nominal length	min	max	l_{gf}	l_{gp}	l_{gf}	l_{gp}	l_{gf}	l_{gp}	l_{gf}	l_{gp}						
60	58,50	61,50	50	36												
80	78,50	81,50	70	50	70	50		52								
90	88,25	91,75		60	80	50										
100	98,25	101,75		60	80	50		52		60						
120	118,25	121,75		70	100	75		80		80						
140	138,00	142,00		70		75		80		80						
160	158,00	162,00		70		75		80		80						
180	178,00	182,00		70		75		100		100						
200	198,00	202,00		70		100		100		100						
220	218,00	222,00		70		100		100		100						
240	238,00	242,00		70		100		100		120						
260	258,00	262,00		70		100		100		120						
280	278,00	282,00		70		100		115		120						
300	298,00	302,00		70		100		115		120						
320	317,00	323,00				100		115								
330	327,00	333,00						115								
340	337,00	343,00				100		115								
350	347,00	353,00								145						
360	357,00	363,00				100		115								
380	377,00	383,00				100		115								
400	397,00	403,00														
450/500	l_s –3,00	l_s +3,00				100		115		145						
550/600	l_s –3,00	l_s +3,00								145						

All sizes in mm

- Intermediate lengths at l_s are possible
- Threaded lengths between $4 \times d \leq l_g \leq l_{gmax}$ are possible

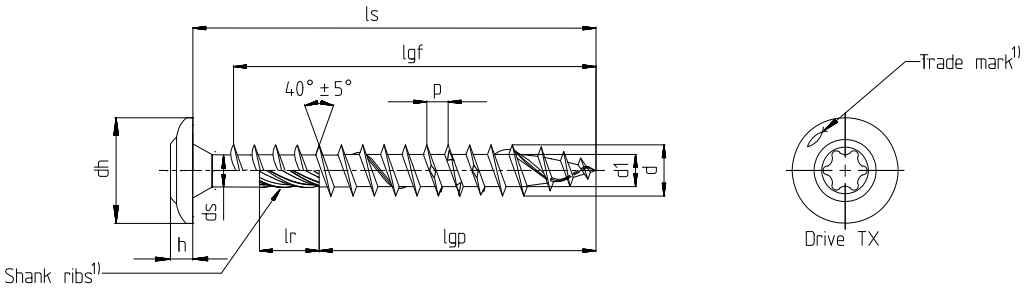

1) optional

Power-Fast wood construction screw - Flange head with full- or partial thread

- Carbon steel
- Possible surface treatments: yellow or blue zinc-plated, blue zinc-plated ≥12µm, bonus-zinced

Nominal diameter		**6,0**	**8,0**	**10,0**	**12,0**			
d	Outer diameter	6,00	8,00	10,00	12,00			
	Allow. deviation	±0,30		±0,40	±0,50			
d_1	Core diameter	4,00	5,40	6,40	7,60			
	Allow. deviation	±0,20			±0,30			
d_h	Head diameter	13,70	21,00	24,70	27,90			
	Allow. deviation	-0,70/+1,30	±1,00	-1,20/+2,80	-1,40/+2,60			
d_s	Shank diameter	4,30	5,90	7,10	8,30			
	Allow. deviation	-0,30/+0,10	±0,20		±0,30			
h	Head height	3,50		5,60	6,70			
	Allow. deviation	±1,00		±0,50				
p	Thread pitch	3,00-4,50	6,00	7,50				
	Allow. deviation	±10%						
l_r 1)	Shank rib length	8,00	13,00					
	Allow. deviation	-2,00						
Drive TX		30	40		50			

Screw length l_s			Standard thread length | l_{gf} = Full thread | l_{gp} =Partial thread | Tolerance: ± 2,0													
Nominal length	min	max	l_{gf}	l_{gp}	l_{gf}	l_{gp}	l_{gf}	l_{gp}	l_{gf}	l_{gp}						
60	58,50	61,50	50	36												
80	78,50	81,50	70	50	70	50		52								
90	88,25	91,75		60	80	50										
100	98,25	101,75		60	80	50		52		60						
120	118,25	121,75		70	100	75		80		80						
140	138,00	142,00		70		75		80		80						
160	158,00	162,00		70		75		80		80						
180	178,00	182,00		70		75		100		100						
200	198,00	202,00		70		100				100						
220	218,00	222,00		70		100		100		100						
240	238,00	242,00		70		100		100		100						
260	258,00	262,00		70		100		100		100						
280	278,00	282,00		70		100		115		120						
300	298,00	302,00		70		100		115		120						
320	317,00	323,00				100		115								
330	327,00	333,00						115								
340	337,00	343,00				100		115								
350	347,00	353,00								145						
in steps of 10mm																
360-500	l_s -3,00	l_s +3,00				100		115								
in steps of 50mm																
550-600	l_s -3,00	l_s +3,00								145						

All sizes in mm

- Intermediate lengths at l_s are possible
- Threaded lengths between $4 \times d \leq l_g \leq l_{gmax}$ are possible

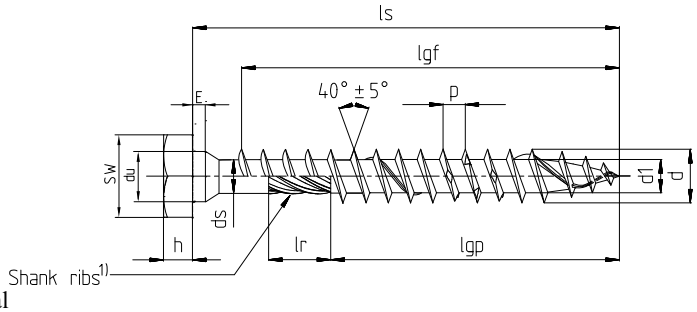

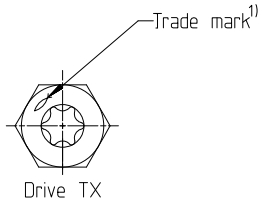

1) optional

Power-Fast wood construction screw - Hexagon head with full- or partial thread

- Carbon steel
- Possible surface treatments: yellow or blue zinc-plated, blue zinc-plated ≥12µm, bonus-zinced

Nominal diameter		**6,0**	**8,0**	**10,0**	**12,0**			
d	Outer diameter	6,00	8,00	10,00	12,00			
	Allow. deviation	±0,30		±0,40	±0,50			
d_1	Core diameter	4,00	5,40	6,40	7,60			
	Allow. deviation	±0,20			±0,30			
d_u	Underhead diameter	6,25	8,25	10,30	12,40			
	Allow. deviation	-0,80		-0,90	-1,00			
SW	Wrench size	9,90	12,80	14,80	16,80			
	Allow. deviation	±0,30						
E	Height	2,00	2,10	2,30	3,30			
	Allow. deviation	±0,50						
d_s	Shank diameter	4,30	5,90	7,10	8,30			
	Allow. deviation	-0,30/+0,10	±0,20					
h	Head height	4,00	4,50	5,20	5,70			
	Allow. deviation	±0,30	±0,40	±0,50				
p	Thread pitch	3,00-4,50	6,00	7,50				
	Allow. deviation	±10%						
l_r1)	Shank rib length	8,00		13,00				
	Allow. deviation	-2,00						
Drive TX		30	40		50			

Screw length l_s			Standard thread length | l_{gf} = Full thread | l_{gp} =Partial thread | Tolerance: ± 2,0[2]													
Nominal length	min	max	l_{gf}	l_{gp}	l_{gf}	l_{gp}	l_{gf}	l_{gp}	l_{gf}	l_{gp}						
60	58,5	61,5	50	30												
80	78,5	81,5	70	50	70	50		52								
90	88,25	91,75		60	80	50										
100	98,25	101,75		60	80	50		52		60						
120	118,25	121,75		70	100	75		80		80						
140/160	l_s –2,00	l_s +2,00		70		75		80		80						
180	178,00	182,00		70		75		100		100						
200/220	l_s –2,00	l_s +2,00		70		100		100		100						
240/260	l_s –2,00	l_s +2,00		70		100		100		120						
280/300	l_s –2,00	l_s +2,00		70		100		115		120						
320	317,00	323,00				100		115								
330	327,00	333,00						115								
340	337,00	343,00				100		115								
350	347,00	353,00								145						
360/380	l_s –3,00	l_s +3,00				100		115								
in steps of 50mm																
400-500	l_s –3,00	l_s +3,00				100		115		145						
550/600	l_s –3,00	l_s +3,00								145						

All sizes in mm

- Intermediate lengths at l_s are possible
- Threaded lengths between $4 \times d \leq l_g \leq l_{gmax}$ are possible

[2] 18mm ≥ l_g ≤ 30mm ≙ ±1,7mm

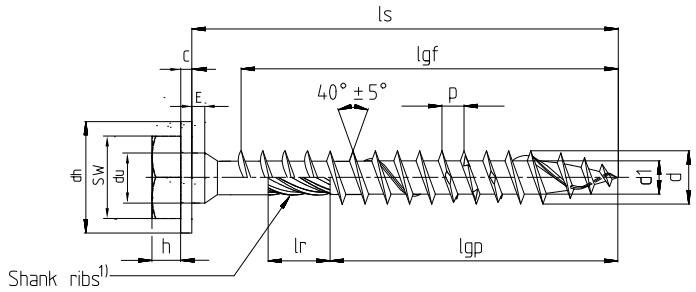

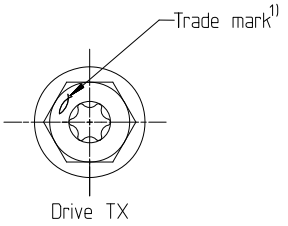

1) optional

Power-Fast wood construction screw - Hexagon head with washer and full- or partial thread

- Carbon steel
- Possible surface treatments: yellow or blue zinc-plated, blue zinc-plated ≥12µm, bonus-zinced

Nominal diameter		**6,0**	**8,0**	**10,0**	**12,0**
d	Outer diameter	6,00	8,00	10,00	12,00
	Allow. deviation	±0,30		±0,40	±0,50
d_1	Core diameter	4,00	5,40	6,40	7,60
	Allow. deviation	±0,20			±0,30
d_h	Head diameter	15,00	18,00	21,50	23,40
	Allow. deviation	1,20		1,50	
d_u	Underhead diameter	6,25	8,25	10,30	12,40
	Allow. deviation	-0,80		-0,90	-1,00
SW	Wrench size	9,90	12,80	14,80	16,80
	Allow. deviation	±0,30			
c	Washer height	1,80	2,00	2,20	2,50
E	Height	2,00	2,10	2,30	3,30
	Allow. deviation	±0,50			
d_s	Shank diameter	4,30	5,90	7,10	8,30
	Allow. deviation	-0,30/+0,10	±0,20		
h	Head height	4,00	4,50	5,20	5,70
	Allow. deviation	±0,30	±0,40	±0,50	
p	Thread pitch	3,00-4,50	6,00	7,50	
	Allow. deviation	±10%			
l_r1)	Shank rib length	8,00		13,00	
	Allow. deviation	-2,00			
Drive TX		30	40		50

Screw length l_s			Standard thread length | l_{gf} = Full thread | l_{gp} =Partial thread | Tolerance: ± 2,0[2)]													
Nominal length	min	max	l_{gf}	l_{gp}	l_{gf}	l_{gp}	l_{gf}	l_{gp}	l_{gf}	l_{gp}						
60	58,50	61,50	50	30												
80	78,50	81,50	70	50	70	50		52								
90	88,25	91,75		60	80	50										
100	98,25	101,75		60	80	50		52		60						
120	118,25	121,75		70	100	75		80		80						
140/160	l_s –2,00	l_s +2,00		70		75		80		80						
180	178,00	182,00		70		75		100		100						
200/220	l_s –2,00	l_s +2,00		70		100		100		100						
240/260	l_s –2,00	l_s +2,00		70		100		100		120						
280/300	l_s –2,00	l_s +2,00		70		100		115		120						
320	317,00	323,00				100		115								
330	327,00	333,00						115								
340	337,00	343,00				100		115								
350	347,00	353,00								145						
360/380	l_s –3,00	l_s +3,00				100		115								
in steps of 50mm																
400-500	l_s –3,00	l_s +3,00				100		115		145						
550/600	l_s –3,00	l_s +3,00								145						

All sizes in mm

- Intermediate lengths at l_s are possible
- Threaded lengths between $4 \times d \leq l_g \leq l_{gmax}$ are possible

[2)] 18mm ≥ l_g ≤ 30mm ≙ ±1,7mm

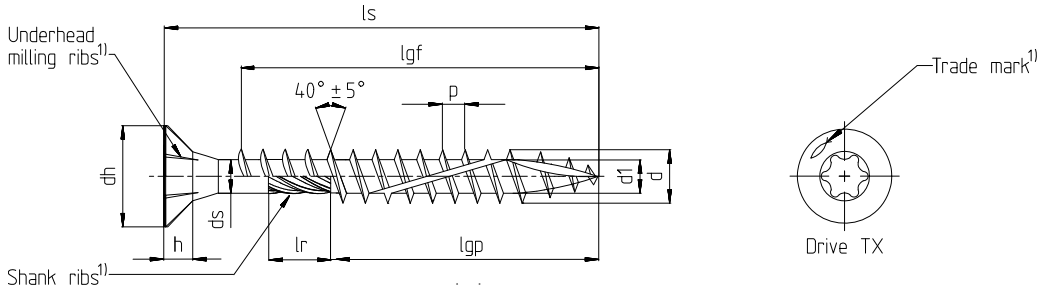

1) optional

FCS wood construction screw - Countersunk head with full- or partial thread

- Carbon steel
- Possible surface treatments: yellow or blue zinc-plated, blue zinc-plated ≥12µm, bonus-zinced

Nominal diameter		**8,0**	**10,0**					
d	Outer diameter	8,00	10,00					
	Allow. deviation	±0,30	±0,40					
d_1	Core diameter	5,40	6,35					
	Allow. deviation	-0,30/+0,20						
d_h	Head diameter	14,40	18,40					
	Allow. deviation	±0,40						
d_s	Shank diameter	5,90	7,10					
	Allow. deviation	-0,30/+0,10						
h	Head height	6,00-7,00	7,50-8,50					
p	Thread pitch	5,20	5,60					
	Allow. deviation	±10%						
l_r 1)	Shank rib length	13,0						
	Allow. deviation	-2,00						
Drive TX		40						

Screw length l_s			Standard thread length | l_{gf} = Full thread | l_{gp} =Partial thread | Tolerance: ± 2,0													
Nominal length	min	max	l_{gf}	l_{gp}	l_{gf}	l_{gp}										
80	78,50	81,50	70	50		52										
90	88,25	91,75	80	50		52										
100	98,25	101,75	80	50		52										
110	108,25	111,75	100	75		80										
120	118,25	121,75		75		80										
in steps of 10mm																
130-400	l_s -2,00	l_s +2,00		75		80										

All sizes in mm

- Intermediate lengths at l_s are possible
- Threaded lengths between $4 \times d \leq l_g \leq l_{gmax}$ are possible

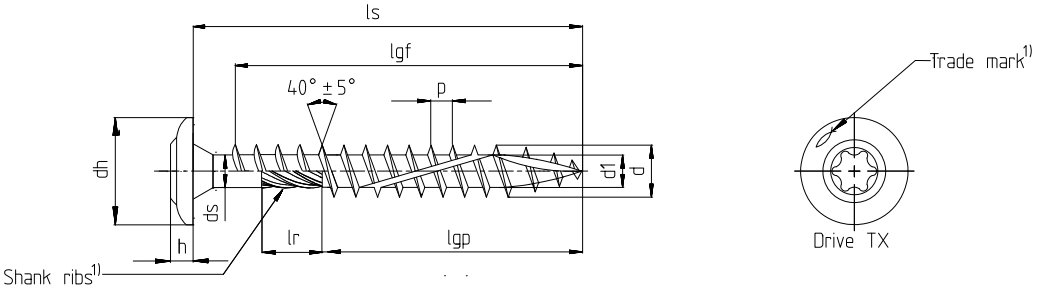

1) optional

FCS wood construction screw - Flange head with partial thread

- Carbon steel
- Possible surface treatments: yellow or blue zinc-plated, blue zinc-plated ≥12µm

Nominal diameter		8,0	10,0					
d	Outer diameter	8,00	10,00					
	Allow. deviation	-0,40/+0,30	±0,40					
d_1	Core diameter	5,40	6,35					
	Allow. deviation	±0,30						
d_h	Head diameter	21,00	24,70					
	Allow. deviation	±1,00	-1,20/+2,80					
d_s	Shank diameter	5,90	7,10					
	Allow. deviation	-0,30/+0,20						
h	Head height	2,50-4,50	3,70-5,70					
p	Thread pitch	5,20	5,60					
	Allow. deviation	±10%						
l_r 1)	Shank rib length	12,00						
	Allow. deviation	±1,00						
Drive TX		40						

Screw length l_s			Standard thread length | l_{gf} = Full thread | l_{gp} =Partial thread | Tolerance: ± 2,0													
Nominal length	min	max	l_{gf}	l_{gp}	l_{gf}	l_{gp}												
80	78,50	81,50	70	50		52												
90	88,25	91,75	80	50		52												
100	98,25	101,75	80	50		52												
110	108,25	111,75	100	75		80												
120	118,25	121,75		75		80												
in steps pf 10mm																		
130-400	l_s -2,00	l_s +2,00		75		80												

All sizes in mm

- Intermediate lengths at l_s are possible
- Threaded lengths between $4 \times d \leq l_g \leq l_{gmax}$ are possible

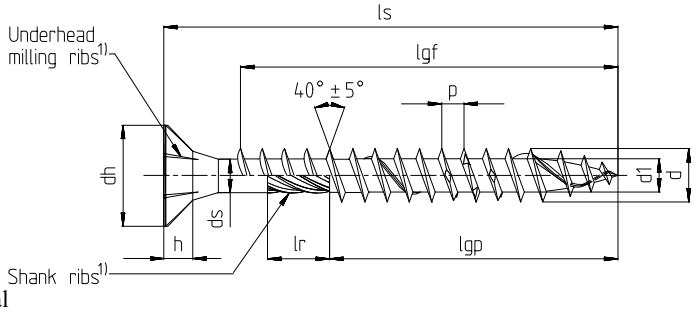

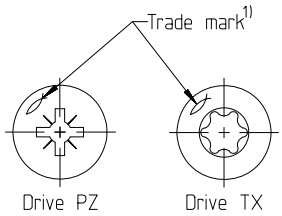

1) optional

Power-Fast self-drilling screw - Countersunk head with full- or partial thread

- Stainless steel

Nominal diameter		3,0	3,5	4,0	4,5	5,0	6,0
d	Outer diameter	3,00	3,50	4,00	4,50	5,00	6,00
	Allow. deviation	±0,30					
d_1	Core diameter	2,00	2,20	2,50	2,70	3,00	4,00
	Allow. deviation	-0,25 / +0,10				±0,20	
d_h	Head diameter	6,00	7,00	8,00	9,00	10,00	12,00
	Allow. deviation	-0,50 / +0,10					
d_s	Shank diameter	2,25	2,60	2,90	3,25	3,60	4,30
	Allow. deviation	-0,30 / +0,10					
h	Head height	1,90	2,10	2,50	2,70	3,00	3,80
p	Thread pitch	1,50	1,80	2,00	2,20	2,50	3,00-4,50
	Allow. deviation	±10%					
l_r 1)	Shank rib length	3,75	4,25	4,75	5,50	6,00	7,00
	Allow. deviation	±0,75			±1,00		
Drive TX		10		20		20 / 25	30
Drive PZ		1	2				3

Screw length l_s	Standard thread length | l_{gf} = Full- thread | l_{gp} =Partial thread | Tolerance: ± 2,0 2)

Nominal length	min	max	l_{gf}	l_{gp}	l_{gf}	l_{gp}	l_{gf}	l_{gp}	l_{gf}	l_{gp}	l_{gf}	l_{gp}	l_{gf}	l_{gp}
20	18,95	21,05	16		16		16		16					
25	23,75	26,25	21		21	18	20	18	20					
30	28,75	31,25	26	18	26	18	25	18	25	18	24			
35	33,50	36,50	31	24	31	24	30	24	30	24	29	24	28	
40	38,50	41,50	36	24	36	24	35	24	35	24	34	24	33	24
45	43,50	46,50	41	30	41	30	40	30	40	30	39	30	38	30
50	48,50	51,50			46	30	45	30	45	30	44	30	43	30
55	53,50	56,50					50	36	50	36	49	36	48	
60	58,50	61,50						36		36		36	53	36
70	68,50	71,50						42		42		42	63	42
80	78,50	81,50						50		50		50	73	50
90	88,25	91,75										60		60
100	98,25	101,75										60		60
110	108,25	111,75										70		70
120	118,25	121,75										70		70
in steps of 10mm														
130-300	l_s –2,00	l_s +2,00												70

All sizes in mm

- Intermediate lengths at l_s are possible
- Screws with partial thread > 50 mm length with shank ribs
- Threaded lengths between $4 \times d \leq l_g \leq l_{gmax}$ are possible

2) 10mm ≥ l_g ≤18mm ≙ ±1,5mm
18mm ≥ l_g ≤ 30mm ≙ ±1,7mm

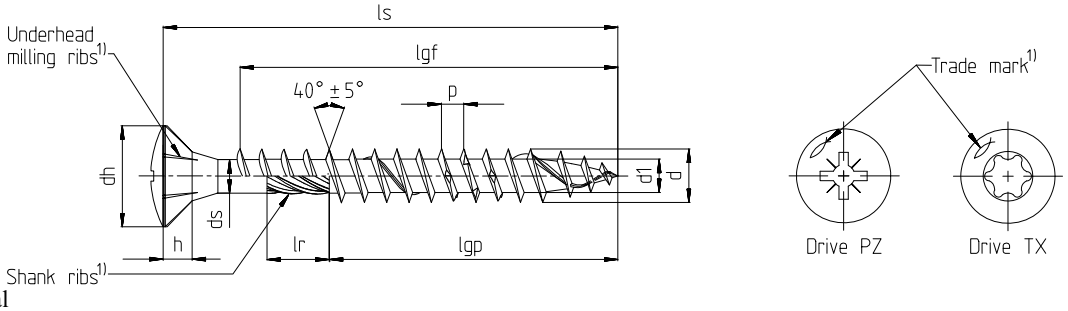

1) optional

Power-Fast self-drilling screw - Raised countersunk head with full- or partial thread

▪ Stainless steel																
Nominal diameter		**3,0**		**3,5**		**4,0**		**4,5**		**5,0**		**6,0**				
d	Outer diameter	3,00		3,50		4,00		4,50		5,00		6,00				
	Allow. deviation	±0,30														
d_1	Core diameter	2,00		2,20		2,50		2,70		3,00		4,00				
	Allow. deviation	-0,25 / +0,10								±0,20						
d_h	Head diameter	6,00		7,00		8,00		9,00		10,00		12,00				
	Allow. deviation	-0,50 /+0,10														
d_s	Shank diameter	2,25		2,60		2,90		3,25		3,60		4,30				
	Allow. deviation	-0,30 / +0,10														
h	Head height	1,90		2,10		2,50		2,70		3,00		3,80				
p	Thread pitch	1,50		1,80		2,00		2,20		2,50		3,00-4,50				
	Allow. deviation	±10%														
l_r 1)	Shank ribs length	3,75		4,25		4,75		5,50		6,00		7,00				
	Allow. deviation	±0,75						±1,00								
Drive TX		10				20				20	25	30				
Drive PZ		1		2								3				
Screw length l_s		Standard thread length | l_{gf}= Full thread | l_{gp} =Partial thread | Tolerance: ± 2,0[2)]														
Nominal length	min	max	l_{gf}	l_{gp}	l_{gf}	l_{gp}	l_{gf}	l_{gp}	l_{gf}	l_{gp}	l_{gf}	l_{gp}	l_{gf}	l_{gp}		
20	18,95	21,05	16		16		16		16							
25	23,75	26,25	21		21	18	21	18	20							
30	28,75	31,25	26	18	26	18	26	18	25	18	24					
35	33,50	36,50	31	24	31	24	31	24	30	24	29	24	28			
40	38,50	41,50		24	36	24	36	24	35	24	34	24	33			
45	43,50	46,50		30		30	41	30	40	30	39	30	38			
50	48,50	51,50				30	46	30	45	30	44	30	43			
55	53,50	56,50						36		36		36				
60	58,50	61,50						36		36		36	53			
70	68,50	71,50						42		42		42	63			
80	78,50	81,50						50		50		50	73			

All sizes in mm

- Intermediate lengths at l_s are possible
- Screws with partial thread > 50 mm length with shank ribs
- Threaded lengths between $4 \times d \leq l_g \leq l_{gmax}$ are possible

2) $10mm \geq l_g \leq 18mm \triangleq \pm 1,5mm$
$18mm \geq l_g \leq 30mm \triangleq \pm 1,7mm$

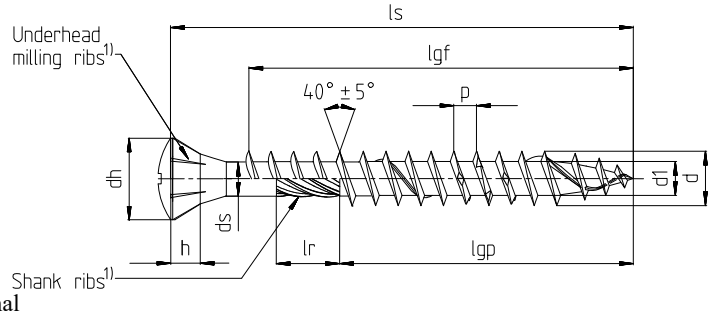

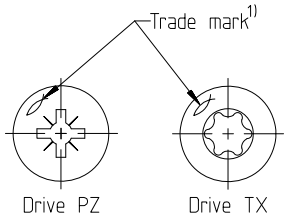

1) optional

Power-Fast self-drilling screw – Facade screw with full- or partial thread

- Stainless steel

Nominal diameter		4,0	4,5	5,0				
d	Outer diameter	4,00	4,50	5,00				
	Allow. deviation	±0,30						
d_1	Core diameter	2,50	2,70	3,00				
	Allow. deviation	-0,25 / +0,10		±0,20				
d_h	Head diameter	6,90	6,90	7,80				
	Allow. deviation	±0,50						
d_s	Shank diameter	2,90	3,25	3,60				
	Allow. deviation	-0,30 / +0,10						
h	Head height	2,50	2,70	3,00				
p	Thread pitch	2,00	2,20	2,50				
	Allow. deviation	±10%						
l_r 1)	Shank ribs length	4,75	5,50	6,00				
	Allow. deviation	±0,75	±1,00					
Drive TX		20		20	25			
Drive PZ		2						

Screw length l_s			Standard thread length | l_{gf} = Full thread | l_{gp} =Partial thread | Tolerance: ± 2,0 2)													
Nominal length	min	max	l_{gf}	l_{gp}	l_{gf}	l_{gp}	l_{gf}	l_{gp}								
20	18,95	21,05	16		16											
25	23,75	26,25	21	18	20											
30	28,75	31,25	26	18	25	18	24									
35	33,50	36,50	31	24	30	24	29	24								
40	38,50	41,50	36	24	35	24	34	24								
45	43,50	46,50	41	30	40	30	39	30								
50	48,50	51,50	46	30	45	30	44	30								
55	53,50	56,50		36		36		36								
60	58,50	61,50		36		36		36								
70	68,50	71,50		42		42		42								
80	78,50	81,50		50		50		50								
90	88,25	91,75						60								
100	98,25	101,75						60								
110	108,25	111,75						70								
120	118,25	121,75						70								

All sizes in mm

- Intermediate lengths at l_s are possible
- Screws with partial thread > 50 mm length with shank ribs
- Threaded lengths between $4 \times d \leq l_g \leq l_{gmax}$ are possible

2) 10mm ≥ l_g ≤18mm ≙ ±1,5mm
18mm ≥ l_g ≤ 30mm ≙ ±1,7mm

fischer Power-Fast and Construction Screws	
Sizes and Material	

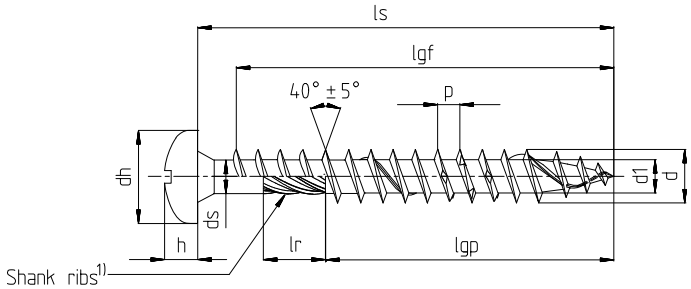

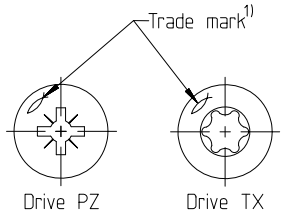

1) optional

Power-Fast self-drilling screw - Pan head with full- or partial thread

▪ Stainless steel																	
Nominal diameter		**3,0**		**3,5**		**4,0**		**4,5**		**5,0**			**6,0**				
d	Outer diameter	3,00		3,50		4,00		4,50		5,00			6,00				
	Allow. deviation	±0,30															
d_1	Core diameter	2,00		2,20		2,50		2,70		3,00			4,00				
	Allow. deviation	-0,25 / +0,10								±0,20							
d_h	Head diameter	6,00		7,00		8,00		9,00		10,00			12,00				
	Allow. deviation	-0,50 / +0,10															
d_s	Shank diameter	2,25		2,60		2,90		3,25		3,60			4,30				
	Allow. deviation	-0,30 / +0,10															
h	Head height	2,30		2,50		2,90		3,10		3,40			3,80				
p	Thread pitch	1,50		1,80		2,00		2,20		2,50			3,00-4,50				
	Allow. deviation	±10%															
l_r1)	Shank ribs length	3,75		4,25		4,75		5,50		6,00			7,00				
	Allow. deviation	±0,75						±1,00									
Drive TX		10				20				20		25	30				
Drive PZ		1		2									3				

Screw length l_s			Standard thread length | l_{gf} = Full thread | l_{gp} =Partial thread | Tolerance: ± 2,0[2)]													
Nominal length	min	max	l_{gf}	l_{gp}	l_{gf}	l_{gp}	l_{gf}	l_{gp}	l_{gf}	l_{gp}	l_{gf}	l_{gp}	l_{gf}	l_{gp}		
20	18,95	21,05	16		16		16									
25	23,75	26,25	21		21	18	20	18	20							
30	28,75	31,25	26	18	26	18	25	18	25	18	24					
35	33,50	36,50	31	24	31	24	30	24	30	24	29	24	28			
40	38,50	41,50		24	36	24	35	24	35	24	34	24	33	24		
45	43,50	46,50		30		30	40	30	40	30	39	30	38	30		
50	48,50	51,50				30	45	30	45	30	44	36	43	30		
55	53,50	56,50					50	36	50	36	49	36	48			
60	58,50	61,50						36		36		42	53	36		
70	68,50	71,50						42		42		50	63	42		
80	78,50	81,50						50		50		50	73	50		
90	88,25	91,75										60		60		
100	98,25	101,75										60		60		

All sizes in mm

- Intermediate lengths at l_s are possible
- Screws with partial thread > 50 mm length with shank ribs
- Threaded lengths between $4 \times d \leq l_g \leq l_{gmax}$ are possible

2) 10mm ≥ l_g ≤18mm ≙ ±1,5mm
18mm ≥ l_g ≤ 30mm ≙ ±1,7mm

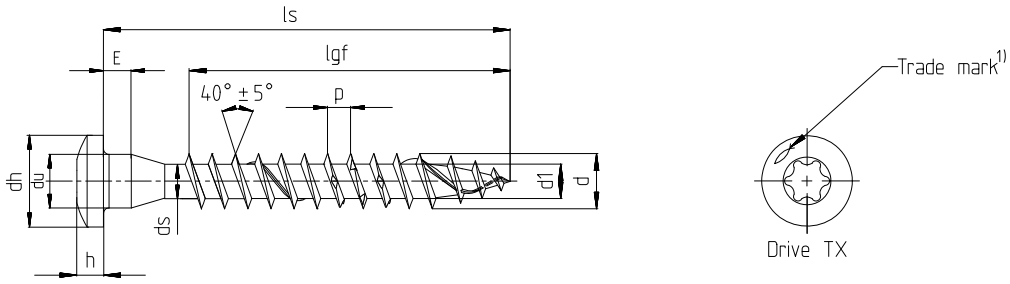

1) optional

Power-Fast self-drilling screw - Wood connector screw with full thread

- Stainless steel

Nominal diameter		5,0							
d	Outer diameter	5,00							
	Allow. deviation	-0,30							
d_1	Core diameter	3,00							
	Allow. deviation	±0,20							
d_u	Underhead diameter	5,00							
	Allow. deviation	-0,35							
d_h	Head diameter	8,25							
	Allow. deviation	±0,40							
E	Height	2,50							
	Allow. deviation	±0,30							
h	Head height	2,60							
p	Thread pitch	2,50							
	Allow. deviation	±10%							
Drive TX		20	25						

Screw length l_s			Standard thread length | l_{gf} = Full thread | l_{gp} =Partial thread | Tolerance: ± 2,0[2)]													
Nominal length	min	max	l_{gf}	l_{gp}												
20	18,95	21,05	14													
25	23,75	26,25	19													
30	28,75	31,25	24													
35	33,50	36,50	29													
40	38,50	41,50	34													
45	43,50	46,50	39													
50	48,50	51,50	44													
55	53,50	56,50	49													
60	58,50	61,50	54													
70	68,50	71,50	64													
80	78,50	81,50	74													

All sizes in mm

- Intermediate lengths at l_s are possible
- Threaded lengths between $4 \times d \leq l_g \leq l_{gmax}$ are possible

2) $10mm \geq l_g \leq 18mm \triangleq \pm 1{,}5mm$
$18mm \geq l_g \leq 30mm \triangleq \pm 1{,}7mm$

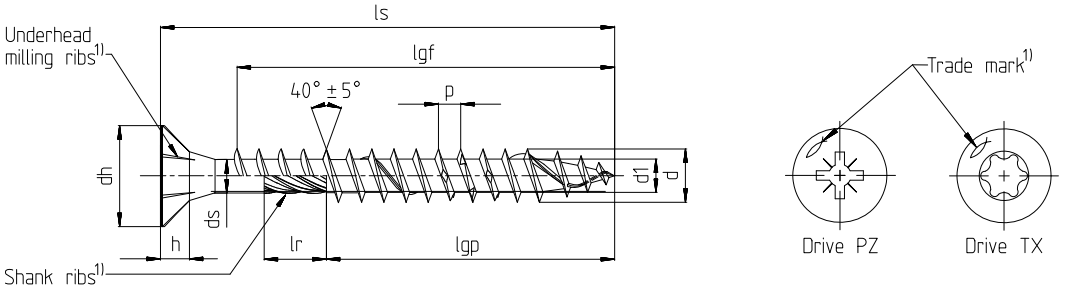

1) optional

Power-Fast wood construction screw - Countersunk head with full- or partial thread

- Stainless steel

Nominal diameter		6,0	8,0					
d	Outer diameter	6,00	8,00					
	Allow. deviation	±0,30						
d_1	Core diameter	4,00	5,40					
	Allow. deviation	±0,20						
d_h	Head diameter	12,00	14,40					
	Allow. deviation	-0,50/+0,10	±0,40					
d_s	Shank diameter	4,30	5,90					
	Allow. deviation	-0,30/+0,10	±0,20					
h	Head height	3,80	5,10					
p	Thread pitch	3,00-4,50	6,00					
	Allow. deviation	±10%						
l_r1)	Shank rib length	7,00	13,00					
	Allow. deviation	±1,00	-2,00					
Drive TX		30	40					
Drive PZ		3	-					

Screw length l_s			Standard thread length | l_{gf} = Full thread | l_{gp} =Partial thread | Tolerance: ± 2,0															
Nominal length	min	max	l_{gf}	l_{gp}	l_{gf}	l_{gp}												
60	58,50	61,50	50	36														
80	78,50	81,50	70	50	70	50												
90	88,25	91,75		60	80	50												
100	98,25	101,75		60	80	50												
120	118,25	121,75		70	100	75												
140	138,00	142,00		70		75												
160	158,00	162,00		70		75												
180	178,00	182,00		70		75												
in steps of 20mm																		
200-300	l_s –2,00	l_s +2,00		70		100												
in steps of 20mm																		
320-500	l_s –3,00	l_s +3,00				100												

All sizes in mm

- Intermediate lengths at l_s are possible
- Screws with partial thread > 50 mm length with shank ribs
- Threaded lengths between $4 \times d \leq l_g \leq l_{gmax}$ are possible

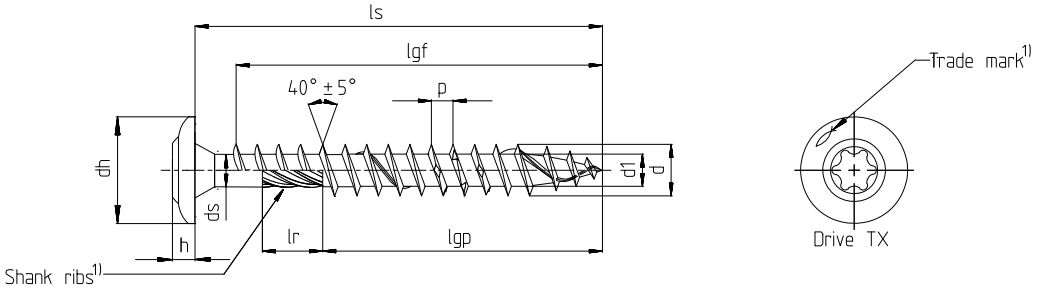

1) optional

Power-Fast wood construction screw - Flange head with full- or partial thread

- Stainless steel

Nominal diameter		6,0	8,0					
d	Outer diameter	6,00	8,00					
	Allow. deviation	±0,30						
d_1	Core diameter	4,00	5,40					
	Allow. deviation	-0,30/+0,20						
d_h	Head diameter	13,70	21,00					
	Allow. deviation	-0,70/+1,30	±1,00					
d_s	Shank diameter	4,30	5,90					
	Allow. deviation	-0,30/+0,10						
h	Head height	3,50						
	Allow. deviation	±1,00						
p	Thread pitch	3,00-4,50	6,00					
	Allow. deviation	±10%						
l_r 1)	Shank rib length	8,00	13,00					
	Allow. deviation	-2,00						
Drive TX		30	40					

Screw length l_s			Standard thread length | l_{gf} = Full thread | l_{gp} =Partial thread | Tolerance: ± 2,0															
Nominal length	min	max	l_{gf}	l_{gp}	l_{gf}	l_{gp}												
60	58,50	61,50	50	36														
80	78,50	81,50	70	50	70	50												
90	88,25	91,75		60	80	50												
100	98,25	101,75		60	80	50												
120	118,25	121,75		70	100	75												
140	138,00	142,00		70		75												
160	158,00	162,00		70		75												
180	178,00	182,00		70		75												
in steps of 20mm																		
200-300	l_s –2,00	l_s +2,00		70		100												
in steps of 20mm																		
320-500	l_s –3,00	l_s +3,00				100												

All sizes in mm

- Intermediate lengths at l_s are possible
- Threaded lengths between $4 \times d \leq l_g \leq l_{gmax}$ are possible

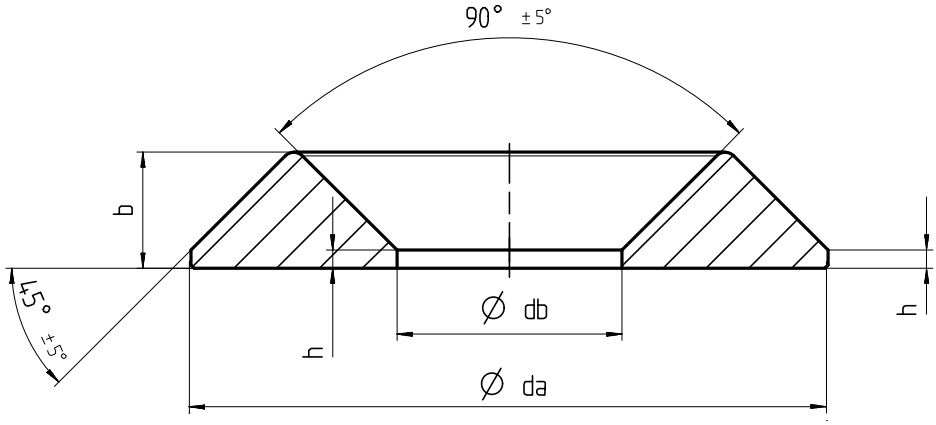

Washer for Power-Fast and construction screws

- Carbon Steel - possible surface treatments: yellow or blue zinc-plated, bonus- zinced, ≥12µm blue zinc-plated
- Stainless steel

Nominal diameter		Type 1				Type 2		
Size		6	8	10	12	6	8	10
db	Inner diameter	6,70	8,70	11,20	6,70	6,70	8,70	11,20
	Allow. deviation	-0,40						
da	Outer diameter	21	30	35	43	21	25,50	30,50
	Allow. deviation	±2,0						
b	Height	4,70	5,20	6,20	8,30	4,70	5,20	6,20
	Allow. deviation	-0,40						
h	Height	1,50	1,80	2,00	2,20	1,50	1,80	2,00
	Allow. deviation	-0,15						

All sizes in mm

Fixing of on-roof insulation system

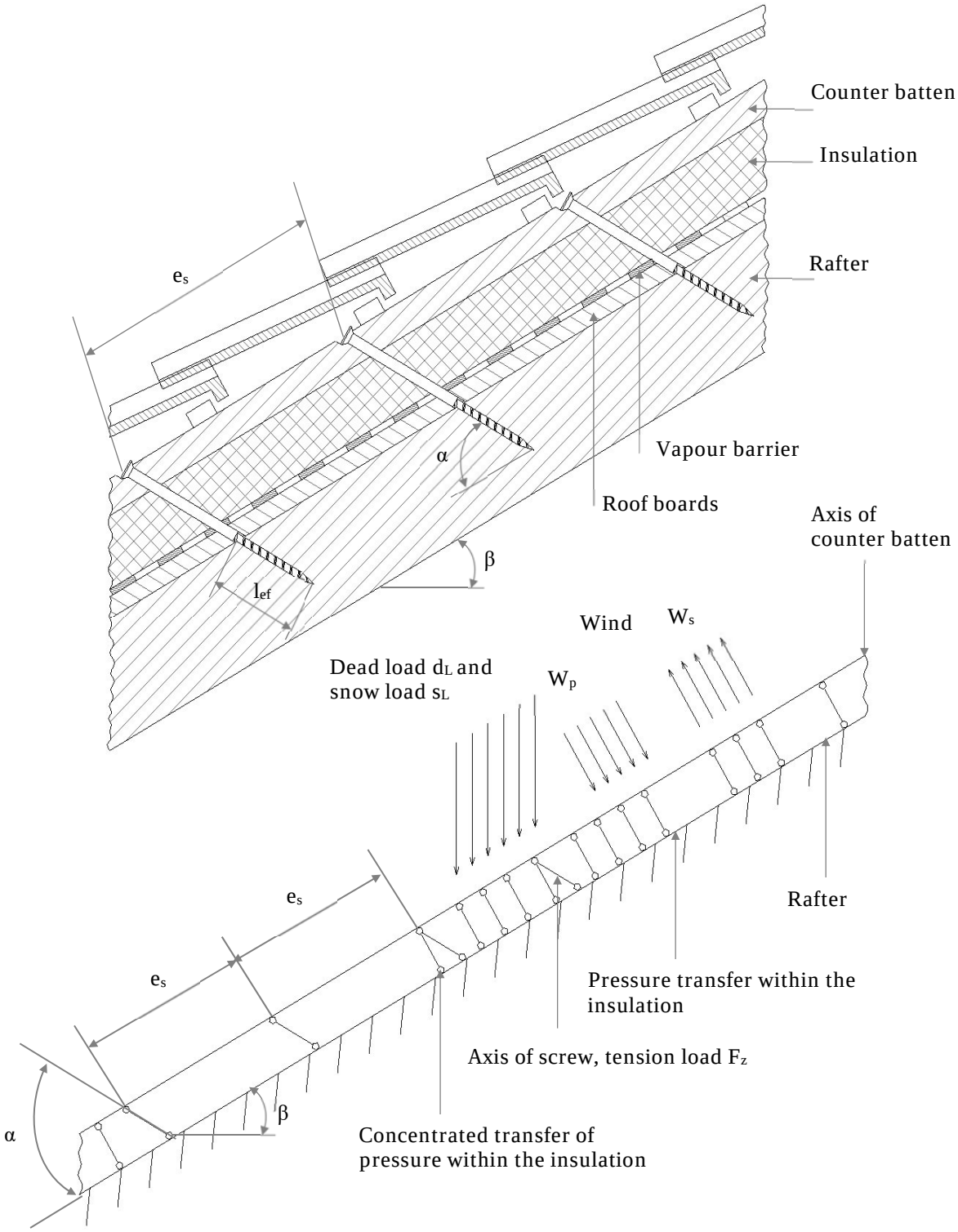

W_S	=	Wind suction	W_P	=	Wind pressure
e_s	=	Spacing of screws	l_{ef}	=	Thread part part of screw in rafter
β	=	Roof inclination	α	=	Angle between axis of screw and axis of rafter

Fixing of on-roof insulation system
Point loads F_b perpendicular to the battens

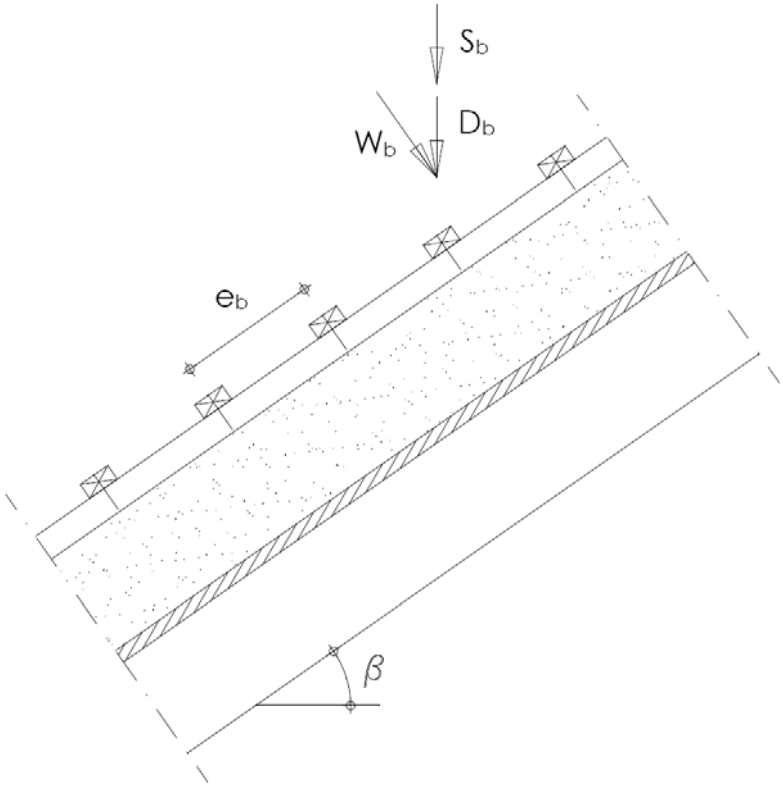

$D_b = d \cdot e_b \cdot e_r$
$S_b = s \cdot e_b \cdot e_r \cdot \cos ß$
$W_b = w_p \cdot e_b \cdot e_r$
$F_b = W_b + (D_b + S_b) \cdot \cos ß$

where

D_b = point load by dead load
S_b = point load by snow load
W_b = point load perpendicular to the batten by wind load (pressure)
e_b = distance of the battens
e_r = distance of the rafters
s = snow load per m² ground area
w_p = wind pressure on the roof area
d = dead load per m² roof area
ß = roof angle

Point loads F_s perpendicular to the battens by screws

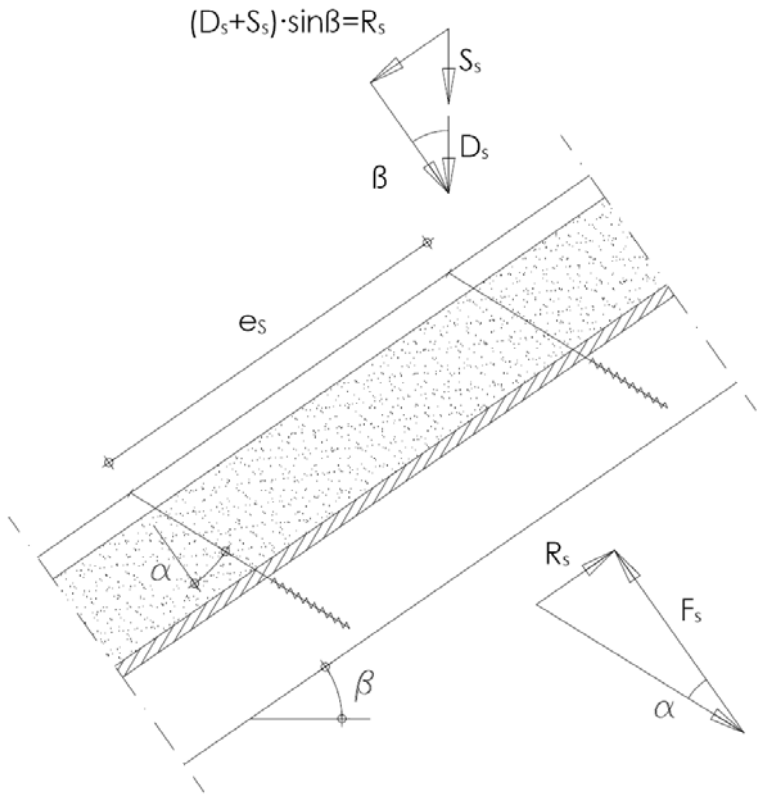

$D_s = d \cdot e_s \cdot e_r$
$S_s = s \cdot e_s \cdot e_r \cdot \cos ß$
$R_s = (D_s + S_s) \cdot \sin ß$
$F_s = R_s / \tan \alpha$

where

D_s = point load by dead load
S_s = point load by snow load
R_s = shear load of the roof by dead load and snow load
e_s = distance of the screws
e_r = distance of the rafters
α = angle between screw axis and perpendicular to rafter axis

Design of the battens

The bending stresses are calculated as:

$$M = \frac{(F_b + F_s) \cdot \ell_{char}}{4}$$

Where

ℓ_{char} = characteristic length $\ell_{char} = \sqrt[4]{\frac{4 \cdot EI}{w_{ef} \cdot K}}$

EI = bending stiffness of the batten
K = coefficient of subgrade
w_{ef} = effective width of the heat insulation
F_b = Point loads perpendicular to the battens
F_s = Point loads perpendicular to the battens, load application in the area of the screw heads

The coefficient of subgrade K may be calculated from the modulus of elasticity E_{HI} and the thickness t_{HI} of the heat insulation if the effective width w_{ef} of the heat insulation under compression is known. Due to the load extension in the heat insulation the effective width w_{ef} is greater than the width of the batten or rafter, respectively. For further calculations, the effective width w_{ef} of the heat insulation may be determined according to:

$$w_{ef} = w + t_{HI} / 2$$

where
w = minimum width of the batten or rafter, respectively
t_{HI} = thickness of the heat insulation

$$K = \frac{E_{HI}}{t_{HI}}$$

The following condition shall be satisfied:

$$\frac{\sigma_{m,d}}{f_{m,d}} = \frac{M_d}{W \cdot f_{m,d}} \leq 1$$

For the calculation of the section modulus W the net cross section has to be considered.

The shear stresses shall be calculated according to:

$$V = \frac{(F_b + F_s)}{2}$$

The following condition shall be satisfied:

$$\frac{\tau_d}{f_{v,d}} = \frac{1{,}5 \cdot V_d}{A \cdot f_{v,d}} \leq 1$$

For the calculation of the cross section area the net cross section has to be considered.

Design of the heat insulation

The compressive stresses in the heat insulation shall be calculated according to:

$$\sigma = \frac{1{,}5 \cdot F_b + F_s}{2 \cdot \ell_{char} \cdot w}$$

The design value of the compressive stress shall not be greater than 110 % of the compressive stress at 10 % deformation calculated according to EN 826.

Design of the screws

The screws are loaded predominantly axially. The axial tension force in the screw may be calculated from the shear loads of the roof R_s:

$$T_S = \frac{R_S}{\cos \alpha}$$

The load-carrying capacity of axially loaded screws is the minimum design value of the axial withdrawal capacity of the threaded part of the screw, the head pull-through capacity of the screw and the tensile capacity of the screw.

In order to limit the deformation of the screw head for heat insulation thicknesses over 200 mm or with compressive strength below 0,12 N/mm², respectively, the axial withdrawal capacity of the screws shall be reduced by the factors k_1 and k_2:

$$F_{ax,\alpha,Rd} = \min \begin{cases} k_{ax} \cdot f_{ax,d} \cdot d \cdot \ell_{ef} \cdot k_1 \cdot k_2 \left(\frac{\rho_k}{350} \right)^{0,8} \\ f_{head,d} \cdot d_h^2 \cdot \left(\frac{\rho_k}{350} \right)^{0,8} \end{cases}$$

where:

$f_{ax,d}$	design value of the axial withdrawal parameter of the threaded part of the screw
d	outer thread diameter of the screw
ℓ_{ef}	Point side penetration length of the threaded part of the screw in the rafter, $l_{ef} \geq 40$ mm
α	Angle between grain and screw axis ($\alpha \geq 30°$)
ρ_k	characteristic density of the wood-based member [kg/m³]
$f_{head,d}$	design value of the head pull-through capacity of the screw
d_h	head diameter
k_1	min {1; 200/t_{HI}}
k_2	min {1; $\sigma_{10\%}$/0,12}
t_{HI}	thickness of the heat insulation [mm]
$\sigma_{10\%}$	compressive stress of the heat insulation under 10 % deformation [N/mm²]

If equation k_1 and k_2 are considered, the deflection of the battens does not need to be considered. Alternatively to the battens, panels with a minimum thickness of 20 mm from plywood according to EN 636 or an ETA or national provisions that apply at the installation site, particle board according to EN 312 or an ETA or national provisions that apply at the installation site, oriented strand board according to EN 300 or an ETA or national provisions that apply at the installation site and solid wood panels according to EN 13353 or an ETA or national provisions that apply at the installation site or cross laminated timber according to an ETA may be used.

Thermal insulation material on rafters with parallel screws perpendicular to the roof plane

Alternatively to the battens, panels with a minimum thickness of 20 mm from plywood according to EN 636, particleboard according to EN 312, oriented strand board OSB/3 and OSB/4 according to EN 300 or European Technical Approval and solid wood panels according to EN 13353 may be used.

Characteristic load-carrying capacity of a screw loaded in shear:

$$F_{v,Rk} = \min \begin{cases} f_{h,b,k} \cdot d \cdot t_b \\ f_{h,r,k} \cdot d \cdot t_r \\ \frac{f_{h,b,k} \cdot d \cdot \beta}{1+\beta} \cdot \left(\sqrt{4t_{il}^2 + (2+\frac{1}{\beta})t_b^2 + (2+\beta)t_r^2 + 4t_{il}(t_b + t_r) + 2t_b t_r} - 2t_{il} - t_b - t_r \right) + \frac{F_{ax,Rk}}{4} \\ 1{,}05 \cdot \frac{f_{h,b,k} \cdot d \cdot \beta}{\frac{1}{2}+\beta} \left(\sqrt{t_{il}^2 + t_{il}t_b + \frac{t_b^2}{2}\left(1+\frac{1}{\beta}\right) + \frac{M_{y,k}}{f_{h,b,k} d}\left(1+\frac{2}{\beta}\right)} - t_{il} - \frac{t_b}{2} \right) + \frac{F_{ax,Rk}}{4} \\ 1{,}05 \cdot \frac{f_{h,b,k} \cdot d \cdot \beta}{\frac{1}{2}+\beta} \left(\sqrt{t_{il}^2 + t_{il}t_r + \frac{t_r^2}{2}(1+\beta) + \frac{M_{y,k}}{f_{h,b,k} d}\left(2+\frac{1}{\beta}\right)} - t_{il} - \frac{t_r}{2} \right) + \frac{F_{ax,Rk}}{4} \\ 1{,}15 \cdot \frac{f_{h,b,k} \cdot d}{1+\beta} \left(\sqrt{\beta^2 t_{il}^2 + 4\beta(\beta+1) \cdot \frac{M_{y,k}}{f_{h,b,k} d}} - \beta t_{il} \right) + \frac{F_{ax,Rk}}{4} \end{cases}$$

Where:

$f_{h,b,k}$	Characteristic batten embedding strength [N/mm²]
$f_{h,r,k}$	Characteristic rafter embedding strength [N/mm²]
β	$f_{h,r,k}/f_{h,b,k}$
d	Outer thread diameter [mm]
t_b	Batten thickness [mm]
t_r	The lower value of rafter thickness or screw penetration length [mm]
t_{il}	Interlayer thickness [mm]
$M_{y,k}$	Characteristic fastener yield moment [Nmm]
$F_{ax,Rk}$	Characteristic axial tensile capacity of the screw [N]

Minimum distances and spacing

Axially or laterally loaded screws in the plane surface or edge surface of cross laminated timber
Definition of spacing, end and edge distances in the plane surface unless otherwise specified in the technical specification (ETA or hEN) for the cross laminated timber:

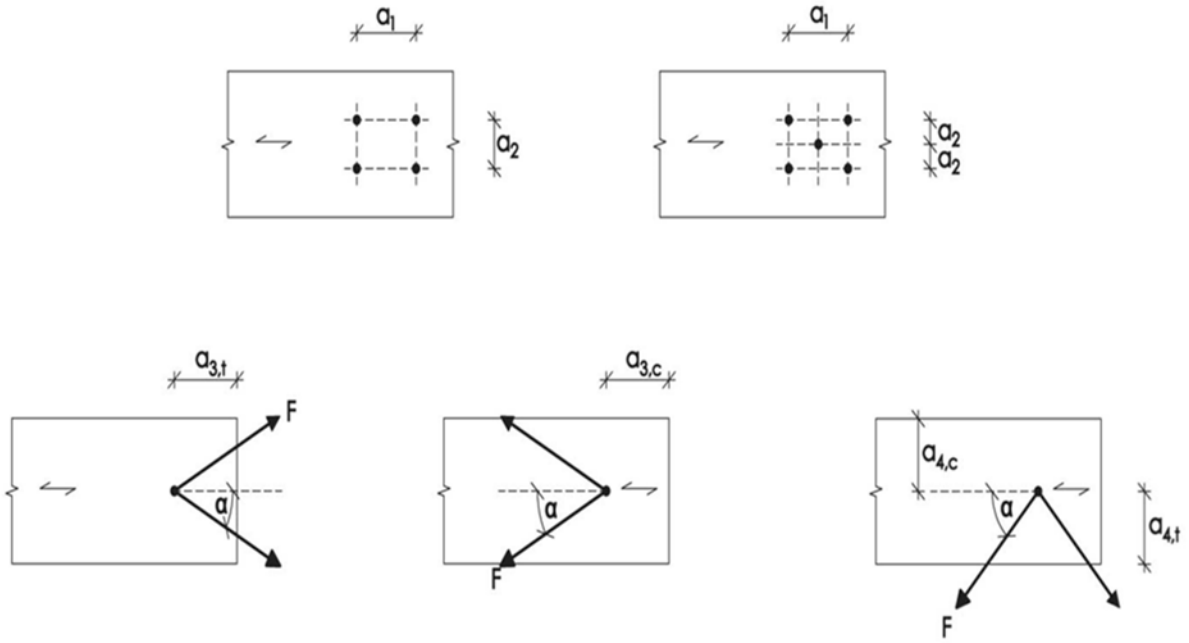

Definition of spacing, end and edge distances in the edge surface unless otherwise specified in the technical specification (ETA or hEN) for the cross laminated timber.

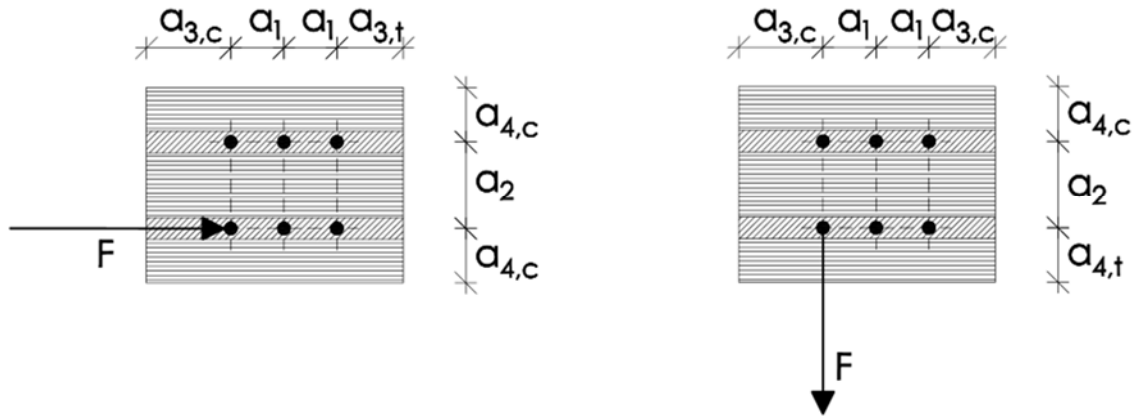

For screws in the edge surface, a_1 and a_3 are parallel to the CLT plane surface, a_2 and a_4 perpendicular to CLT plane surface.

Table C1: Minimum spacing, end and edge distances of screws in the plane or edge surfaces of cross laminated timber

	a_1	$a_{3,t}$	$a_{3,c}$	a_2	$a_{4,t}$	$a_{4,c}$
Plane surface (see Figure 1)	4 · d	6 · d	6 · d	2,5 · d	6 · d	2,5 · d
Edge surface (see Figure 2)	10 · d	12 · d	7 · d	4 · d	6 · d	3 · d

Visualisation of the Power-Fast screw head clamped between two metal plates

Metric screws with hexagon head, countersunk head or cylindric head or threaded rods with nut and washer – each according to the structural requirements – at least 2xM8 (≥4.6 respectively A2-50) for the connection of the two plates made of aluminium (mechanical properties at least like e.g. EN AW 6082, EN AW 5083, EN AW 6060 or EN AC-44100); made of carbon steel or made of stainless steel (each at least S235).

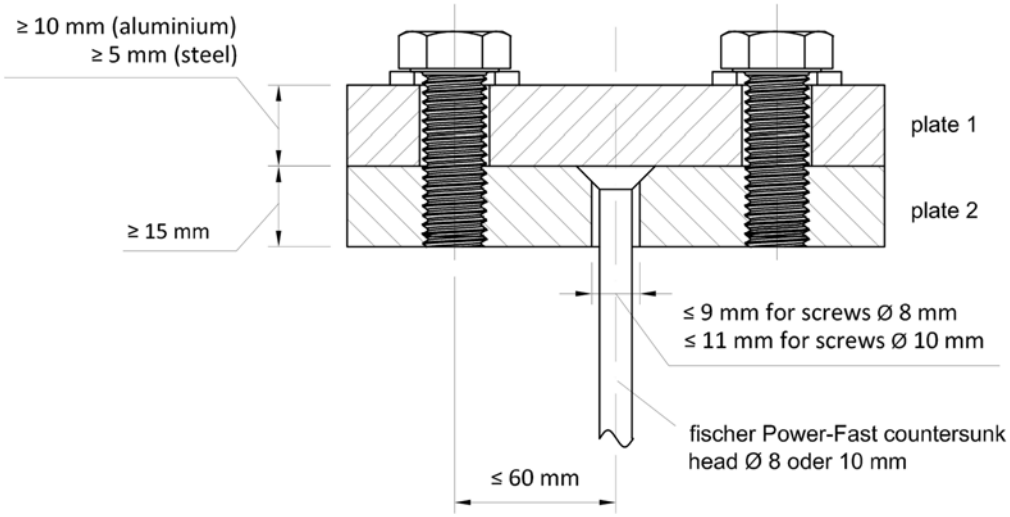

Information for the structural analysis of the metric screw connection and the metal plates are not part of this European Technical Assessment.

(Fig. not to scale)

fischer Power-Fast and Construction Screws	
clamping of the screw head for compression impact	