DECLARACIÓN DE PRESTACIONES

DoP 0251

para fischer termoz CN 8 / fischer termoz CN 8 R / fischer termoz CNplus 8 (Anclajes de plástico para el uso en hormigón y mampostería) ES

1. Código de identificación única del producto tipo:	**DoP 0251**
2. Usos previstos:	**Anclaje de plástico clavado para la fijación de sistemas compuestos de aislamiento térmico exterior (ETICS) con revoque en hormigón y mampostería, véase el apéndice, especialmente los anexos B1 - B3.**
3. Fabricante:	**fischerwerke GmbH & Co. KG, Klaus-Fischer-Str. 1, 72178 Waldachtal, Alemania**
4. Representante autorizado:	**–**
5. Sistemas de evaluación y verificación de la constancia de las prestaciones (EVCP):	**2+**
6. Documento de evaluación europeo:	**EAD 330196-01-0604**
Evaluación técnica europea:	**ETA-09/0394; 2017-12-19**
Organismo de evaluación técnica:	**DIBt- Deutsches Institut für Bautechnik**
Organismos notificados:	**2873 TU Darmstadt**

7. Prestaciones declaradas:

Seguridad en uso (BWR 4)		
Capacidad de carga característica:	**Resistencia característica bajo carga de tensión:**	**Anexos C1, C2**
	Distancia mínima al borde:	**Anexo B2**
	Espacio mínimo:	**Anexo B2**
Desplazamientos:	**Carga de tensión con factor parcial:**	**Anexo C4**
	Desplazamientos:	**Anexo C4**
Rigidez de la placa:	**Diámetro de la placa de anclaje:**	**Anexo C4**
	Resistencia a la carga de la placa de anclaje:	**Anexo C4**
	Rigidez de la placa:	**Anexo C4**
Economía de energía y retención de calor (BWR 6)		
Transmitancia térmica:	**Transmitancia térmica puntual de un anclaje:**	**Anexo C3**
	Espesor de la capa aislante del ETICS:	**Anexo C3**

8. Documentación técnica adecuada o documentación técnica específica: **–**

Las prestaciones del producto identificado anteriormente son conformes con el conjunto de prestaciones declaradas. La presente declaración de prestaciones se emite, de conformidad con el Reglamento (UE) no 305/2011, bajo la sola responsabilidad del fabricante arriba identificado.

Firmado por y en nombre del fabricante por:

Dr. Oliver Geibig, Director General Unidades de Negocio e Ingeniería

Jürgen Grün, Director General de Química y Calidad

Tumlingen, 2021-01-08

Esta DdR se ha preparado en distintos idiomas. En caso de que haya alguna controversia sobre la interpretación prevalecerá siempre la versión inglesa.

El Apéndice incluye información voluntaria y complementaria en idioma inglés que excede los requisitos legales (de idioma neutral).

Specific Part

1 Technical description of the product

The fischer nailed-in anchor termoz CN 8 and termoz CNplus 8 consists of an anchor sleeve with an enlarged shaft made of polypropylene (virgin material), an insulation plate made of glass fibre reinforced polyamide (virgin material) (termoz CN 8 / 250-390) and a special compound nail consisting of two parts, one made of glass fibre reinforced polyamide for the shaft element and the other part made of galvanised steel.

The specific nail for the anchor types termoz CN 8 / 250 – 390 and termoz CN 8 R / 250 – 310 is made of galvanized steel which is used together with a separate plastic cylinder made of glass fibre reinforced polyamide.

The serrated expanding part of the anchor sleeve is slotted.

The anchor may in addition be combined with the anchor plates DT 90, DT 110 and DT 140.

The product description is given in Annex A.

2 Specification of the intended use in accordance with the applicable European Assessment Document

The performances given in Section 3 are only valid if the anchor is used in compliance with the specifications and conditions given in Annex B.

The verification and assessment methods on which this European Technical Assessment is based lead to the assumption of a working life of the anchor of at least 25 years. The indications given on the working life cannot be interpreted as a guarantee given by the producer, but are to be regarded only as a means for choosing the right products in relation to the expected economically reasonable working life of the works.

3 Performance of the product and references to the methods used for its assessment

3.1 Safety and accessibility in use (BWR 4)

Essential characteristic	Performance
Characteristic tension resistance	See Annex C 1 and C 2
Edge distances and spacing	See Annex B 2
Plate stiffness	See Annex C 4
Displacements	See Annex C 4

3.2 Energy economy and heat retention (BWR 6)

Essential characteristic	Performance
Point thermal transmittance	See Annex C 3

4 Assessment and verification of constancy of performance (AVCP) system applied, with reference to its legal base

In accordance with EAD No. 330196-01-0604, the applicable European legal act is: [97/463/EC].

The system to be applied is: 2+

termoz CN 8 / 110 – 230 / termoz CNplus 8 / 110 – 230 – flush mounted

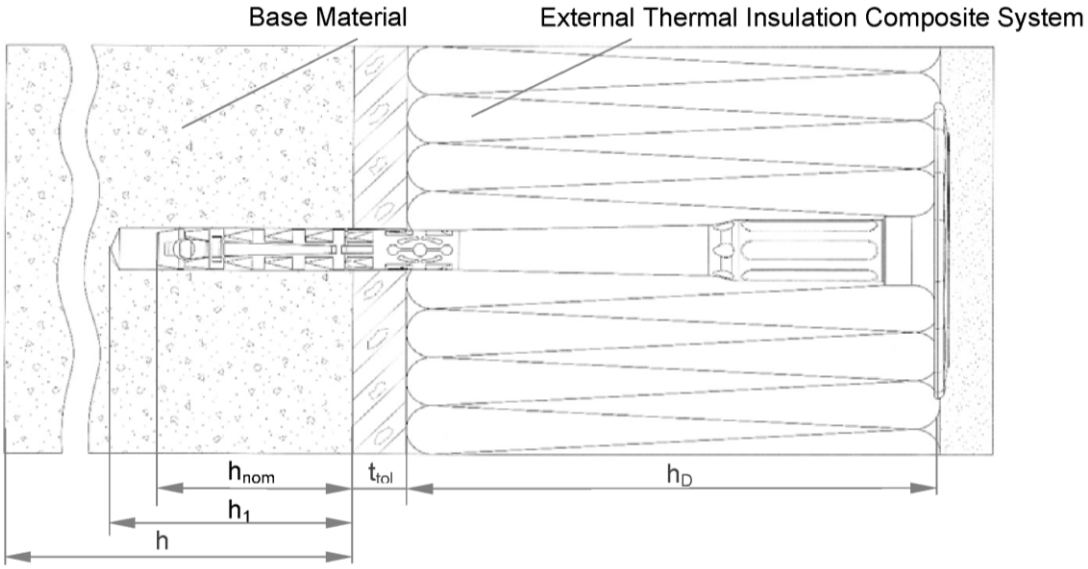

termoz CN 8 / 250 – 390 / termoz CN 8 R / 250 – 310 / termoz CNplus 8 / 250-390 – flush mounted

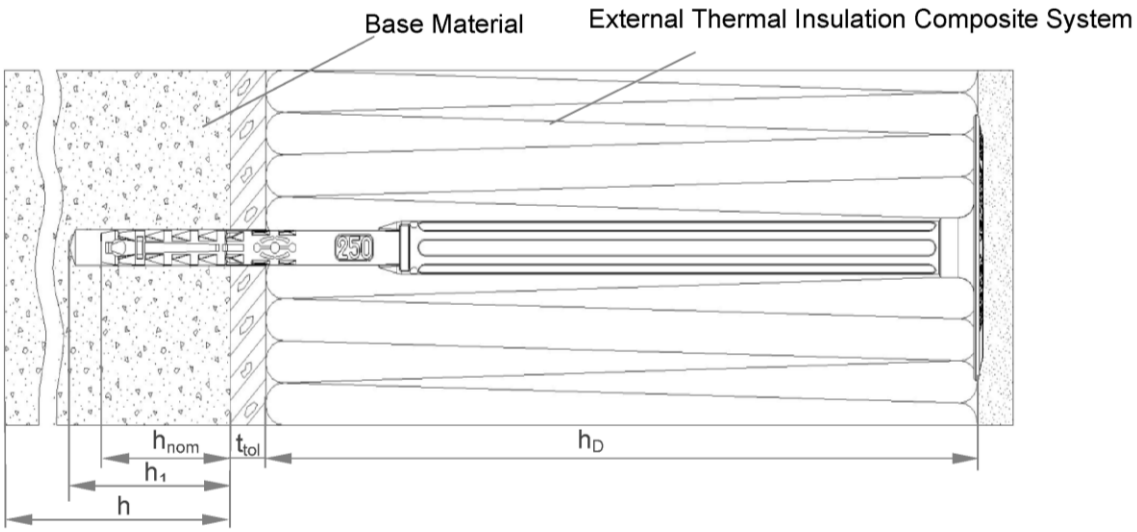

Legend

h_{nom} = Overall plastic anchor embedment depth in the base material
h_1 = Depth of drilled hole to deepest point
h = Thickness of member (wall)
h_D = Thickness of insulation material
t_{tol} = Thickness of equalizing layer or non–load bearing coating

termoz CNplus 8 / 110 – 230 – countersunk mounted

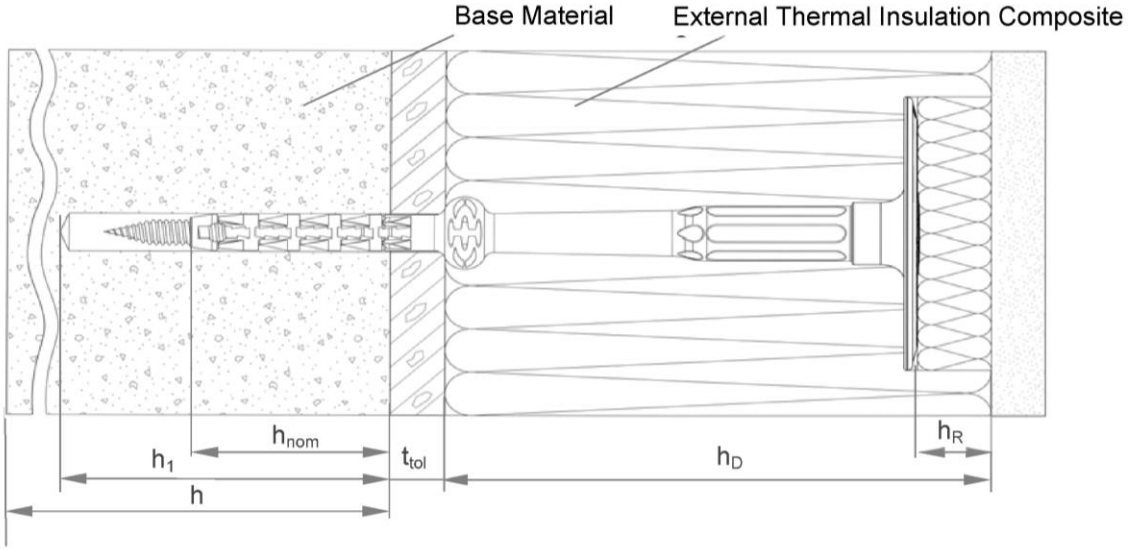

termoz CNplus 8 / 250 – 390 – countersunk mounted

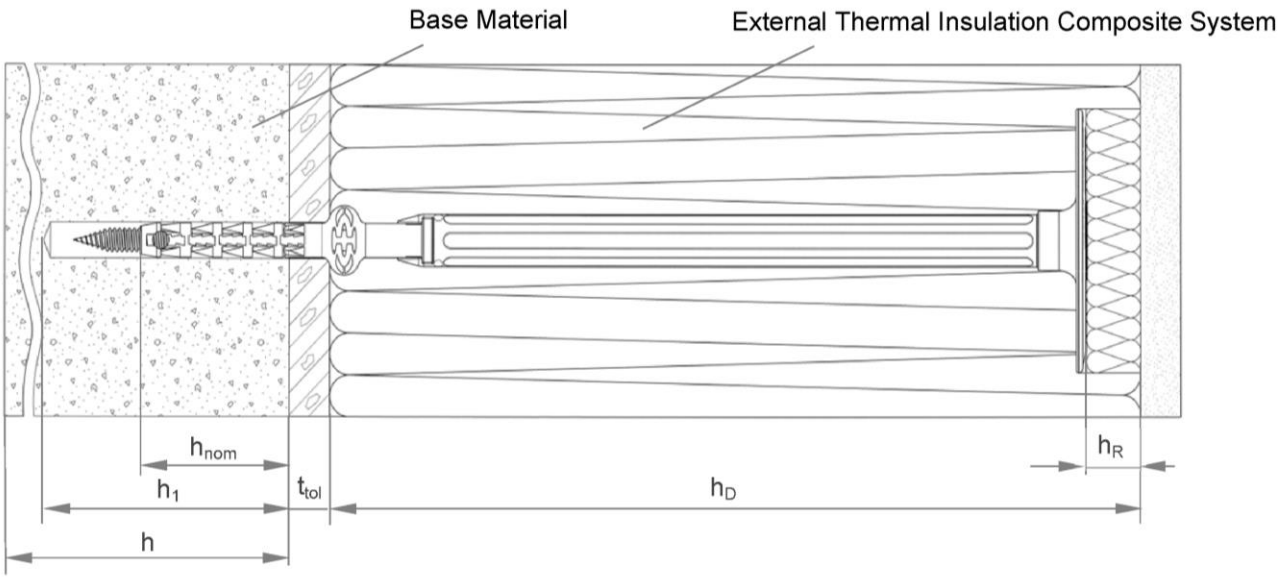

Legend

h_{nom} = Overall plastic anchor embedment depth in the base material
h_1 = Depth of drilled hole to deepest point
h = Thickness of member (wall)
h_D = Thickness of insulation material
h_R = Thickness of insulation cap
t_{tol} = Thickness of equalizing layer or non–load bearing coating

termoz CN 8 / 110-230

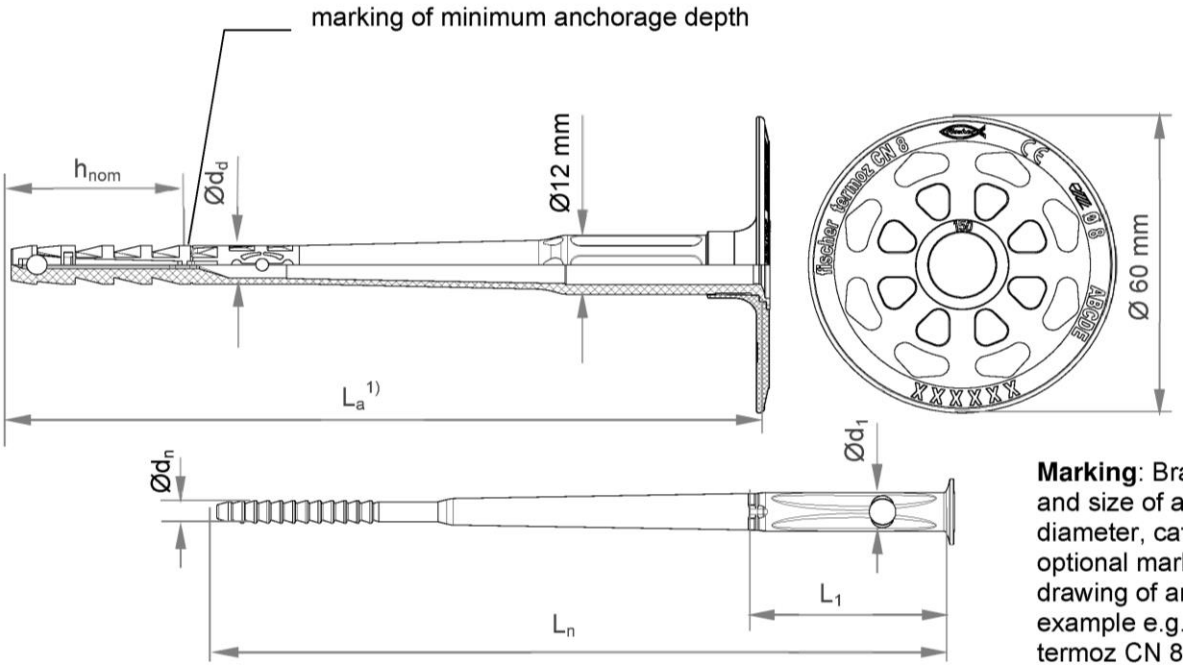

Marking: Brand, name and size of anchor, diameter, categories, optional markings see drawing of anchor plate, example e.g. termoz CN 8 ABCDE

1) Various length of the anchors are possible

e.g. for termoz CN 8 / 110-230:
110 mm ≥ L_a ≤ 230 mm
$L_a = L_n + 4$ mm

Determination of maximum thickness of insulation: $h_D = L_a - h_{nom} - t_{tol}$

e.g. for termoz CN 8x150: L_a = 148 mm, h_{nom} = 35 mm, t_{tol} = 10 mm

h_D = 148 - 35 - 10 ≈ 100

Table A3.1: Dimensions termoz CN 8 / 110-230

Anchor type	Anchor sleeve		Specific compound nail		
	Ø d_d [mm]	**h_{nom}** [mm]	**Ø d_n** [mm]	**L_1** [mm]	**Ø d_1** [mm]
termoz CN 8 / 110-230	8	35/55 2)	4,5	40	8

2) Only for use cat. E

termoz CN 8 / 250 – 390

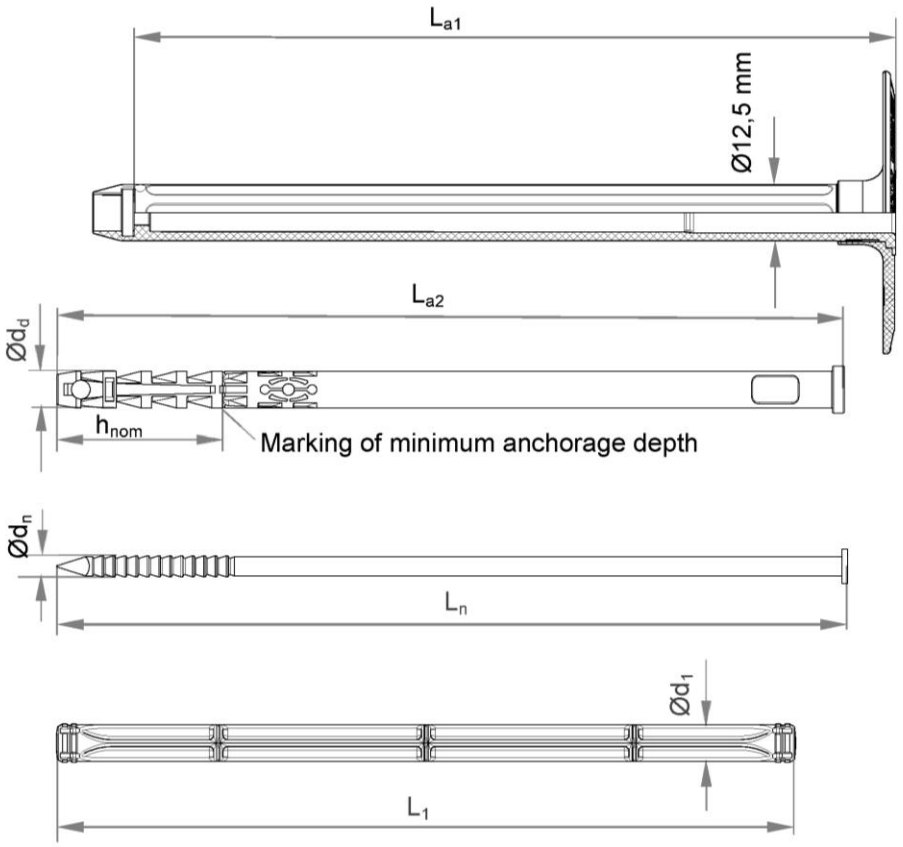

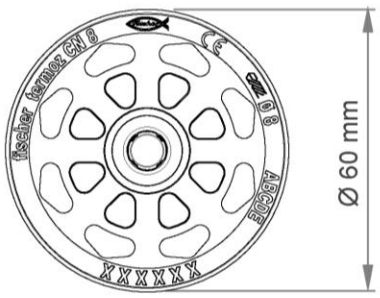

Marking: Brand, name and size of anchor, diameter, categories, optional markings see drawing of anchor plate, example e.g. termoz CN 8, ABCDE

Various lengths of the anchors are possible:

e.g. for termoz CN 8 / 250 – 390:
250 mm ≥ $L_{a1} + L_{a2}$ ≤ 390 mm
$L_a = L_{a1} + L_{a2} = L_n$ + 160,5 mm

Determination of maximum thickness of insulation: $h_D = L_a - h_{nom} - t_{tol}$

e.g. for termoz CN 8x330: L_a = 328 mm, h_{nom} = 35 mm, t_{tol} = 10 mm

h_D = 328 – 35 – 10 ≈ 280 mm

Table A4.1: Dimensions termoz CN 8 / 250 – 390

Anchor type	Shaft	Anchor sleeve			Nail		Plastic cylinder	
	L_{a1} [mm]	Ø d_d [mm]	h_{nom} [mm]	L_{a2} [mm]	Ø d_n [mm]	L_n [mm]	L_1 [mm]	Ø d_1 [mm]
termoz CN 8 / 250 – 390	161	8	35/55[1)]	87 - 247	4,5	(L_{a1}+L_{a2}) – 160,5	157	8

[1)] Only for use cat. E

termoz CN 8 R / 250 – 310

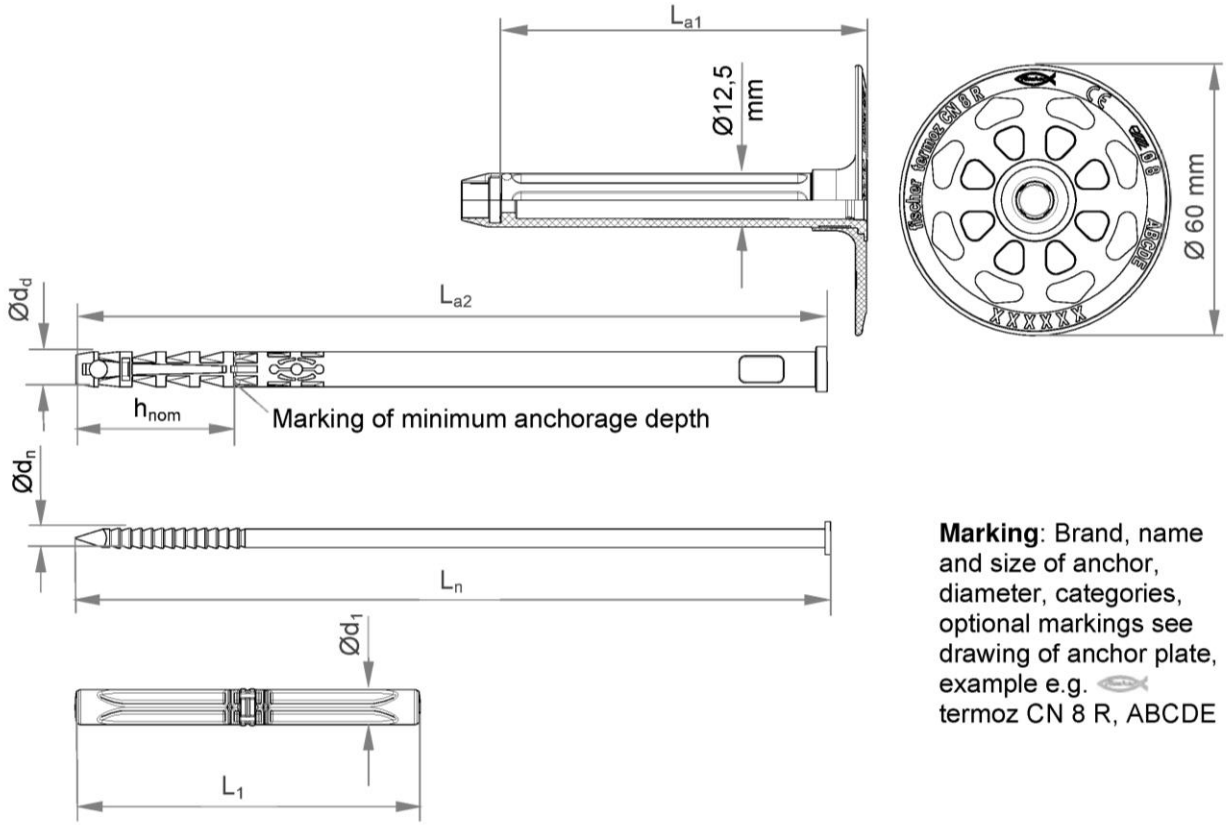

Marking: Brand, name and size of anchor, diameter, categories, optional markings see drawing of anchor plate, example e.g. termoz CN 8 R, ABCDE

Various lengths of the anchors are possible:

e.g. for termoz CN 8 R / 250 – 310:
250 mm ≥ $L_{a1} + L_{a2}$ ≤ 310 mm
$L_a = L_{a1} + L_{a2} = L_n + 80{,}5$ mm

Determination of maximum thickness of insulation: $h_D = L_a - h_{nom} - t_{tol}$

e.g. for termoz CN 8x250 R: $L_a = 248$ mm, $h_{nom} = 35$ mm, $t_{tol} = 10$ mm

$h_D = 248 - 35 - 10 \approx 200$ mm

Table A5.1: Dimensions termoz CN 8 R / 250 – 310

Anchor type	Shaft	Anchor sleeve			Nail		Plastic cylinder	
	L_{a1} [mm]	Ø d_d [mm]	h_{nom} [mm]	L_{a2} [mm]	Ø d_n [mm]	L_n [mm]	L_1 [mm]	Ø d_1 [mm]
termoz CN 8 R / 250 – 310	81	8	35/55[1)]	167 - 247	4,5	$(L_{a1}+L_{a2}) - 80{,}5$	77	8

[1)] Only for use cat. E

termoz CNplus 8 / 110–230

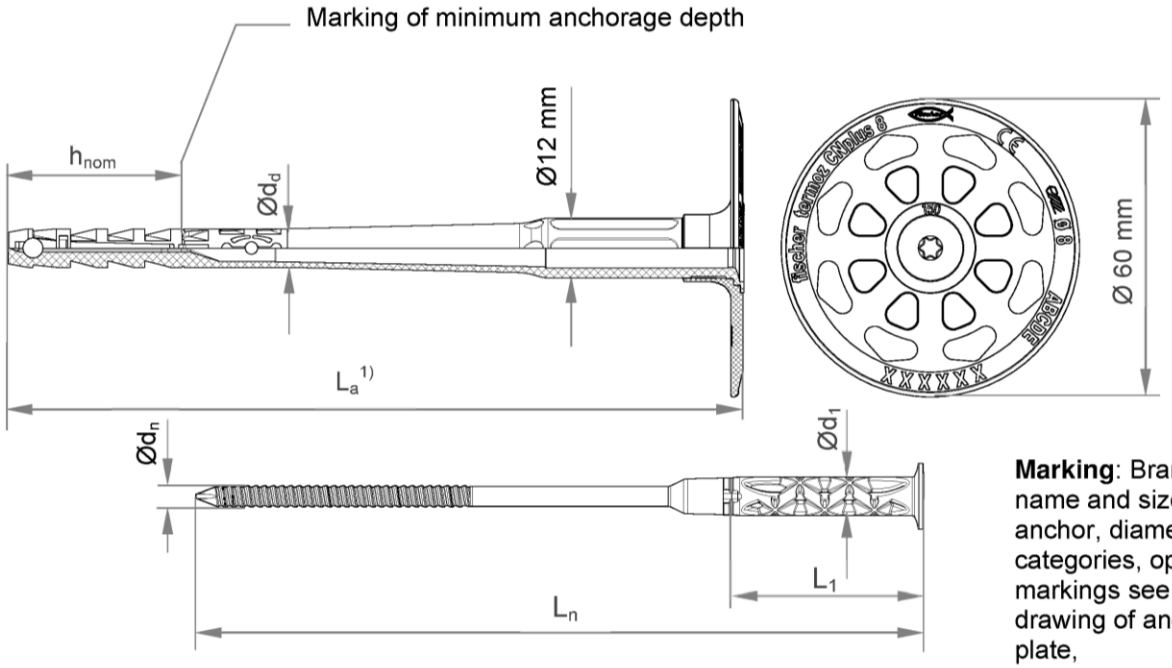

Marking: Brand, name and size of anchor, diameter, categories, optional markings see drawing of anchor plate, example e.g. termoz CNplus 8

[1)]Various lengths of the anchors are permissible:

e.g. for termoz CNplus 8 / 110 – 230: 110 mm ≥ L_a ≤ 230 mm
$L_a = L_n + 1{,}5$ mm

Determination of maximum thickness of insulation: $h_D = L_a - h_{nom} - t_{tol}$

e.g. for termoz CNplus 8x150: $L_a = 148$ mm, $h_{nom} = 35$ mm, $t_{tol} = 10$ mm

$h_D = 148 - 35 - 10 \approx 100$

Table A6.1: Dimensions termoz CNplus 8 / 110–230

Anchor type	Anchor sleeve		Specific compound nail			
	Ø d_d [mm]	**h_{nom}** [mm]	**Ø d_n** [mm]	**L_n** [mm]	**L_1** [mm]	**Ø d_1** [mm]
termoz CNplus 8 / 110-230	8	35/55[1)]	4,3	L_a – 1,5	40	8

[1)] Only for use cat. D & E

termoz CNplus 8 / 250–310

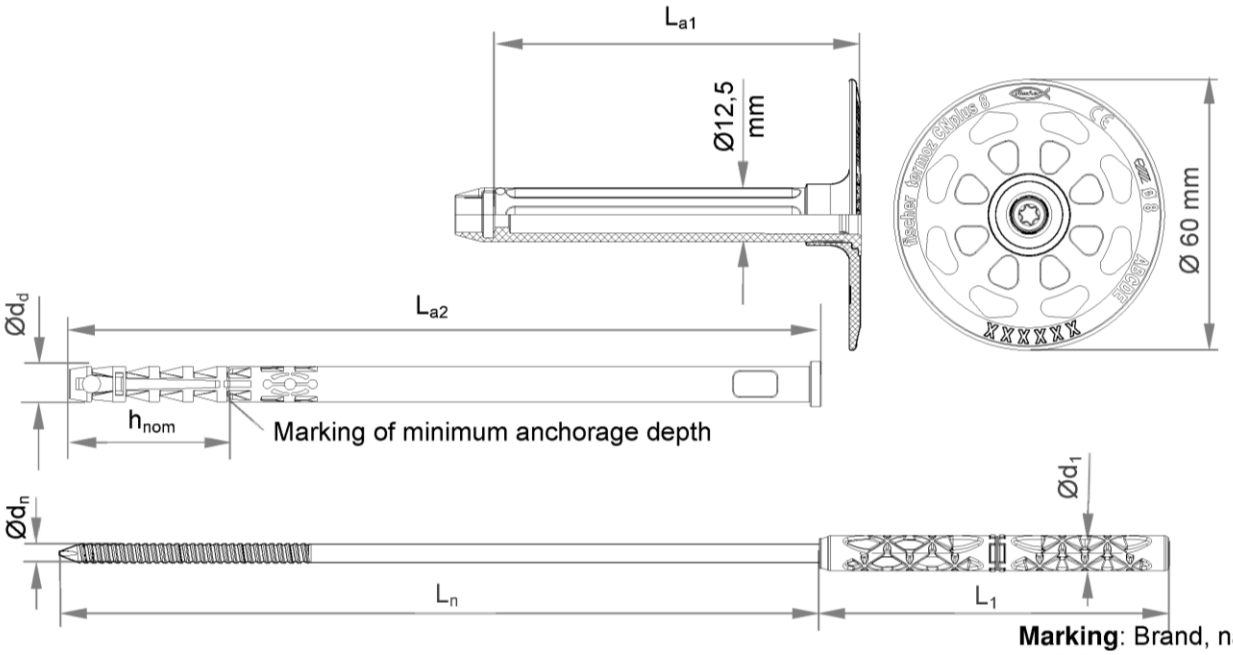

Marking: Brand, name and size of anchor, diameter, categories, optional markings see drawing of anchor plate, example e.g. termoz CNplus 8 ABCDE

Various lengths of the anchors are possible:

e.g. for termoz CN plus / 250 – 310:
250 mm ≥ $L_{a1} + L_{a2}$ ≤ 310 mm
$L_a = L_{a1} + L_{a2} = L_n + 79{,}5$ mm

Determination of maximum thickness of insulation: $h_D = L_a - h_{nom} - t_{tol}$

e.g. for termoz CNplus 8 x 250: $L_a = 248$ mm, $h_{nom} = 35$ mm, $t_{tol} = 10$ mm

$h_D = 248 - 35 - 10 \approx 200$ mm

Table A7.1: Dimensions termoz CNplus 8 / 250 – 310

Anchor type	Shaft	Anchor sleeve			Specific compound nail			
	L_{a1} [mm]	Ø d_d [mm]	h_{nom} [mm]	L_{a2} [mm]	Ø d_n [mm]	L_n [mm]	L_1 [mm]	Ø d_1 [mm]
termoz CNplus 8 / 250 – 310	81	8	35/55[1)]	167 - 247	4,3	$(L_{a1}+L_{a2}) - 79{,}5$	77,5	8

[1)] Only for use cat. D & E

termoz CNplus 8 / 330–390

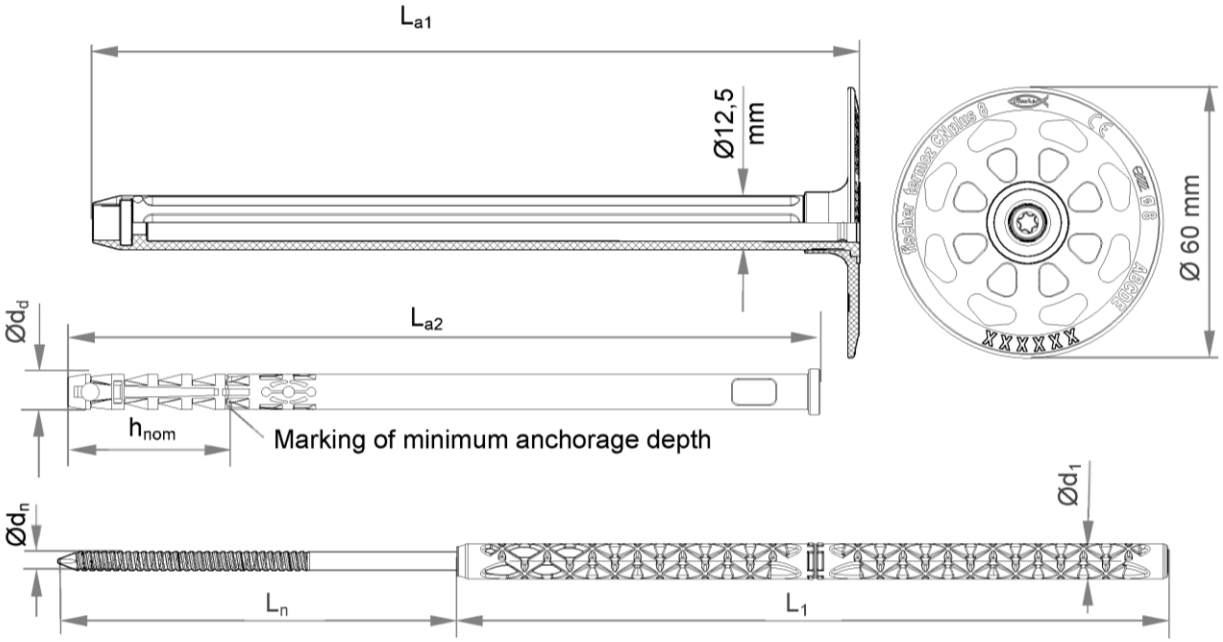

Marking: Brand, name and size of anchor, diameter, categories, optional markings see drawing of anchor plate, example e.g. termoz CNplus 8 ABCDE

Various lengths of the anchors are possible:

e.g. for termoz CNplus 8 / 330 – 390:
330 mm ≥ $L_{a1} + L_{a2}$ ≤ 390 mm
$L_a = L_{a1} + L_{a2} = L_n + 159{,}5$ mm

Determination of maximum thickness of insulation: $h_D = L_a - h_{nom} - t_{tol}$

e.g. for termoz CNplus 8 x 330: $L_a = 328$ mm, $h_{nom} = 35$ mm, $t_{tol} = 10$ mm

$h_D = 328 - 35 - 10 \approx 280$ mm

Table A8.1: Dimensions termoz CNplus 8 / 330 – 390

Anchor type	Shaft	Anchor sleeve			Specific compound nail			
	L_{a1} [mm]	Ø d_d [mm]	h_{nom} [mm]	L_{a2} [mm]	Ø d_n [mm]	L_n [mm]	L_1 [mm]	Ø d_1 [mm]
termoz CNplus 8/ 330 – 390	161	8	35/55[1)]	167 - 247	4,3	$(L_{a1}+L_{a2}) - 159{,}5$	157,5	8

[1)] Only for use cat. D & E

Setting tool with SDS adapter or hexagonal adapter available

fischer termoz CNplus 8

Countersunk setting [1)]

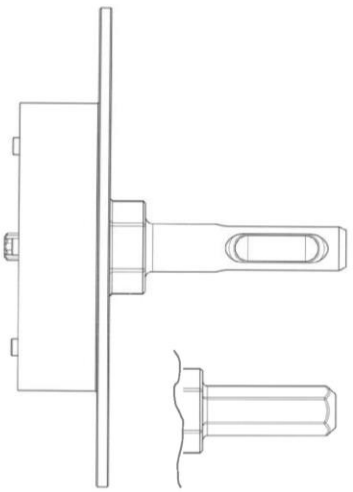

optional plain surface setting

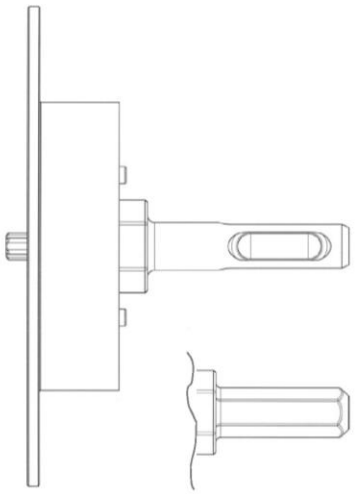

[1)] Alternatively, it is possible to mill the insulation material with a standard, market-available milling tool.

Polystyrene or mineral wool cap

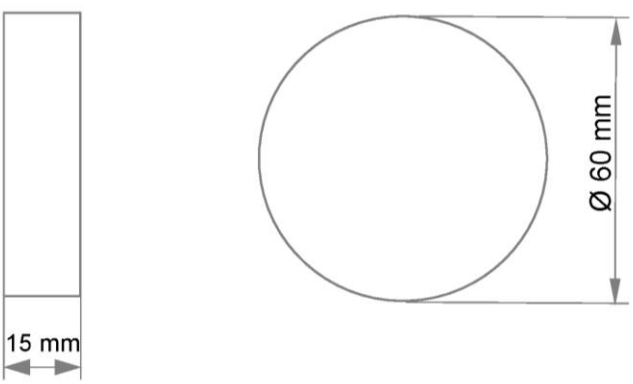

Table A10.1: Material

Designation	Material
Anchor sleeve	PP (virgin material), colour: grey
Shaft termoz CN 8 / 250 – 390 or CN 8 R / 250 – 310 or CNplus 8 / 250 - 390	PA6 (virgin material)GF, colour: grey
Plastic cylinder termoz CN 8 / 250 – 390 or CN 8 R / 250 – 310	PA6 (virgin material) GF
Specific nail termoz CN 8 / 250 – 390 or CN 8 R / 250 – 310	Steel gal Zn A2G or A2F according to EN ISO 4042 : 1999
Specific compound nail termoz CN 8 / 110 – 230 or CNplus 8 / 110 – 230 or CNplus 8 / 250 - 390	PA6 GF (plastic part of compound nail) Steel gal Zn A2G or A2F according to EN ISO 4042 : 1999
Anchor plate	PA6 (virgin material) GF colour: grey, orange, red, green, yellow, blue
Slip-on plate	PA6 (virgin material) GF colour: grey, orange, red, green, yellow, blue

Drawing of the slip-on plates

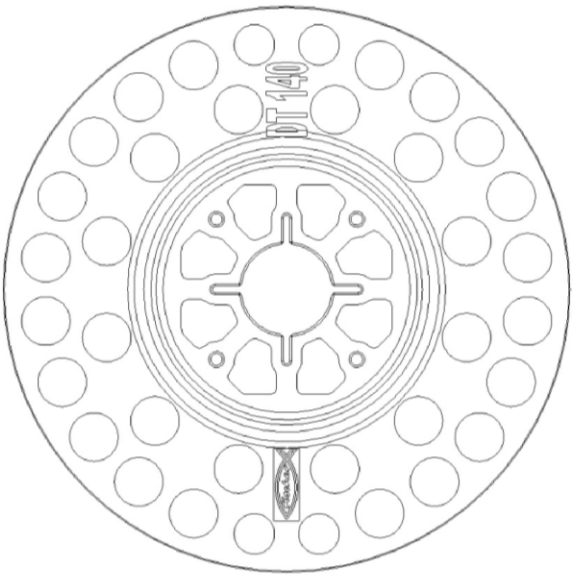

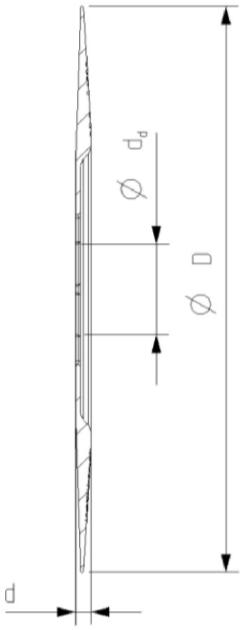

Table A10.2: Slip-on plate, diameters and material

Slip-on plate	Ø D [mm]	Ø d_d [mm]	d [mm]	Material
DT 90 / 110 / 140	90 / 110 / 140	22,5	3,9	PA6 GF

Specifications of intended use

Anchorages subject to:

- The anchor may only be used for transmission of wind suction loads and shall not be used for the transmission of dead loads of the external thermal insulation composite system (ETICS).

Base materials:

- Normal weight concrete (use category A), according to Annex C1 and C2.
- Solid masonry (use category B), according to Annex C1 and C2.
- Hollow or perforated masonry (use category C), according to Annex C1 and C2.
- Lightweight aggregate concrete (use category D), according to Annex C1 and C2.
- Autoclaved aerated concrete (use category E), according to Annex C1 and C2.
- For other base materials of the use categories A, B, C, D and E the characteristic resistance of the anchor may be determined by job site tests acc. to EOTA Technical Report TR 051 Edition December 2016.

Temperature Range:

- 0°C to +40°C (max. short term temperature +40°C and max. long term temperature +24°C).

Design:

- The anchorages are designed under the responsibility of an engineer experienced in anchorages and masonry work with the partial safety factors γ_M = 2,0 and γ_F = 1,5 in absence of other national regulations.
- Verifiable calculation notes and drawings are prepared taking account of the loads to be anchored. The position of the anchors is indicated on the design drawings.
- Fasteners are only to be used for multiple fixings of ETICS.

Installation:

- Hole drilling by the drill modes according to Annex C1 and C2.
- Anchor installation carried out by appropriately qualified personnel and under the supervision of the person responsible for technical matters on the site.
- Installation temperature from 0°C to +40°C
- Exposure to UV due to solar radiation of the anchor not protected by rendering ≤ 6 weeks.

Table B2.1: Installation parameters / flush mounted

Anchor type				termoz CN 8 | CN8 R termoz CNplus 8
Drill hole diameter	d_0	=	[mm]	8
Cutting diameter of drill bit	d_{cut}	≤	[mm]	8,45
Depth of drilled hole to deepest point	h_1	≥	[mm]	45/55[1)]/65[2)]
Overall plastic anchor embedment depth in the base material	h_{nom}	≥	[mm]	35/45[1)]/55[2)]

[1)] Only CNplus 8: for weather shell (thin concrete slabs) : 35 mm ≤ h_{nom} ≤ 45 mm
[2)] termoz CN 8 | CN8 R : Only for use cat. "E" | termoz CNplus 8: Only for use cat. "D" & "E"

Table B2.2: Installation parameters / countersunk mounted

Anchor type				termoz CNplus 8
Drill hole diameter	d_0	=	[mm]	8
Cutting diameter of drill bit	d_{cut}	≤	[mm]	8,45
Depth of drilled hole to deepest point	h_1	≥	[mm]	60/70[1)]/80[2)]
Overall plastic anchor embedment depth in the base material	h_{nom}	≥	[mm]	35/45[1)]/55[2)]

[1)] valid for weather shell (thin concrete slabs): 35 mm ≤ h_{nom} ≤ 45 mm
[2)] Only for use cat. "D" & "E"

Table B2.3: Minimum distances and spacing

				termoz CN 8 | CN8 R termoz CNplus 8
Minimum thickness of member	h_{min}	=	[mm]	100
Minimum spacing	s_{min}	=	[mm]	100
Minimum edge distance	c_{min}	=	[mm]	100

Scheme of distance and spacing

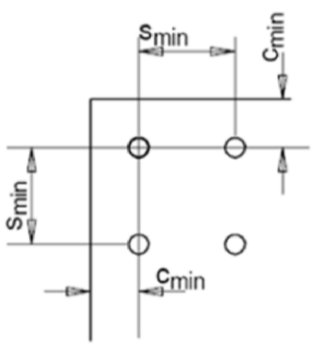

Installation instructions

Setting of anchor (flush mounted) by hammer / fischer termoz CN 8 | termoz CN 8 R | termoz CNplus 8

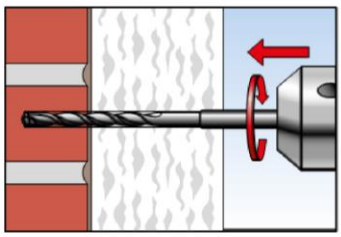

1.Drill hole by corresponding drilling method

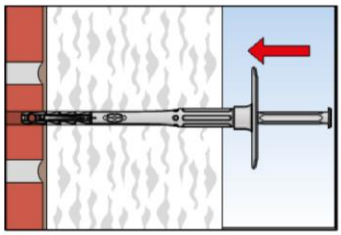

2.Insert anchor manually

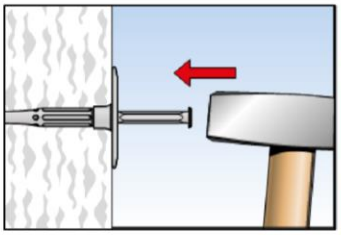

3.Set anchor by hammerblows

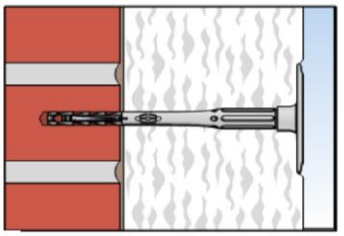

4.Correctly installed anchor

Setting of anchor (flush mounted) by machine / fischer termoz CNplus 8

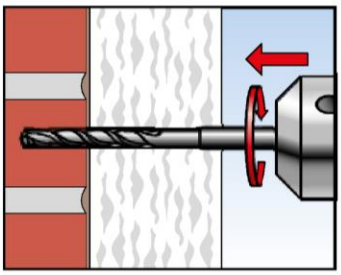

1.Drill hole by corresponding drilling method

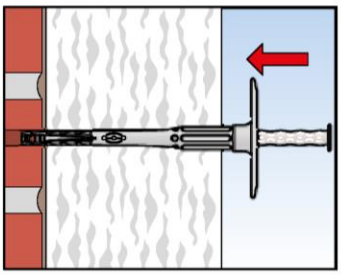

2.Insert anchor manually

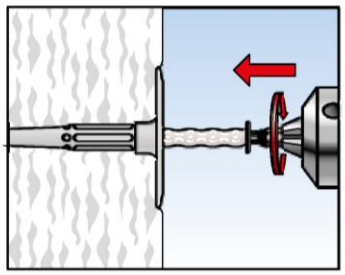

3.Set anchor by machine.

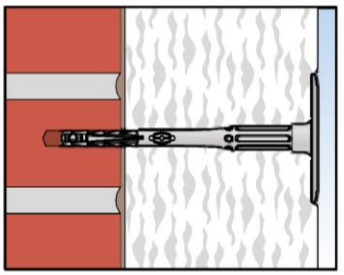

4.Correctly installed anchor

Setting of anchor (flush mounted) by setting tool \ fischer termoz CNplus 8

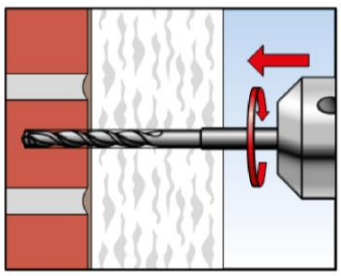

1.Drill hole by corresponding drilling method

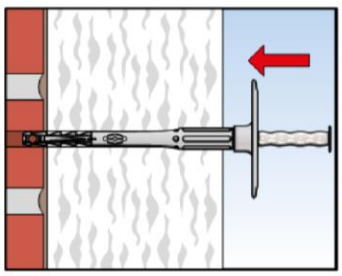

2.Insert anchor manually

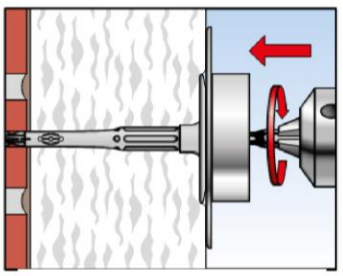

3.Set anchor by setting tool.

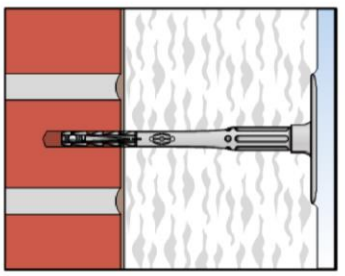

4.Correctly installed anchor

Setting of anchor (countersunk mounted) by setting tool / fischer termoz CNplus 8

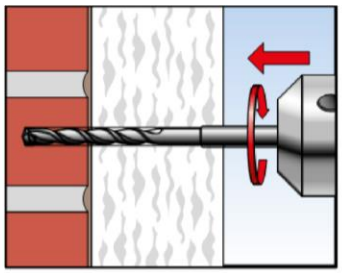

1.Drill hole by corresponding drilling method

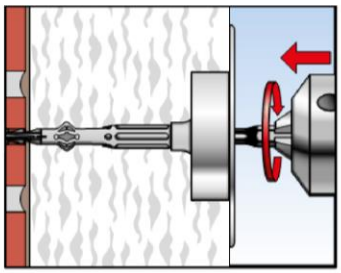

2.Insert anchor and set anchor by setting tool.

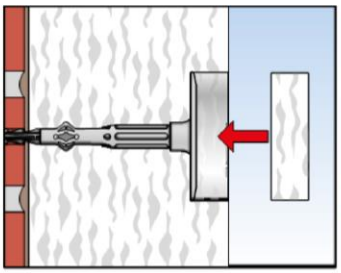

3.Put on polystyrene or mineral wool cap

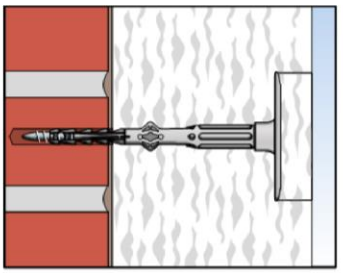

4.Correctly installed anchor

Table C1.1: Characteristic resistance N_{Rk} in [kN] to tension loads for single anchor

Base material	Use cat. [1]	Min. compressive strength f_b [N/mm²]	Bulk density ρ [kg/dm³]	Remarks	Drill method [2]	Characteristic resistance N_{Rk} [kN] **termoz CN 8 termoz CN 8 R**
Concrete ≥ C12/15 - C50/60 EN 206-1:2000	A	-	-	-	H	**0,9**
Solid clay bricks **Mz** acc. to EN 771-1:2011	B	12	≥ 2,0	Cross section reduced up to 15% by perforation vertically to the resting area	H	**0,9**
Calcium silicate solid bricks **KS** e.g. acc. to EN 771-2:2011	B	12	≥ 1,8		H	**0,9**
Solid concrete blocks **Vbn** acc. to EN 771-3:2011	B	20	≥ 2,0		H	**0,75**
Lightweight concrete blocks **Vbl** acc. to EN 771-3:2011	B	8	≥ 1,4		H	**0,6**
Vertically perforated clay bricks **Hlz** acc. to EN 771-1:2011	C	12	≥ 1,0	Cross section reduced between 15% and 50% by perforation vertically to the resting area. Exterior web thickness ≥ 15 mm	R	**0,6**
Hollow calcium silicate brick **KSL** acc. to EN 771-2:2011	C	20	≥ 1,4	Cross section reduced between 15% and 50% by perforation vertically to the resting area. Exterior web thickness ≥ 23 mm	H	**0,75**
		12				**0,5**
Lightweight concrete hollow blocks **Hbl**, acc. to EN 771-3:2011	C	10	≥ 1,2	Cross section reduced between 15% and 50% by perforation vertically to the resting area. Exterior web thickness ≥ 38 mm	H	**0,6**
Lightweight aggregate concrete **LAC**, acc. to EN 1520:2011, EN 771-3:2011	D	6	≥ 0,8	-	H	**0,6**
		4				**0,4**
Autoclaved aerated concrete blocks, **AAC** acc. to EN 771-4:2011	E	6	> 0,6	-	R	**0,3** [3]
		4	> 0,4			**0,3** [3]

[1] See Annex B1
[2] R = Rotary drilling | H = Hammer drilling
[3] Only valid for h_{nom} ≥ 55 mm

Table C2.1: Characteristic resistance N_{Rk} in [kN] to tension loads for single anchor

Base material	Use cat. [1]	Min. compressive strength f_b [N/mm²]	Bulk density ρ [kg/dm³]	Remarks	Drill method [2]	Characteristic resistance N_{Rk} [kN] **termoz CNplus 8**
Concrete ≥ C12/15 - C50/60 EN 206-1:2000	A	-	-	-	H	**0,9**
Weather resistant concrete shell ≥ C20/25 EN 206-1:2000	A	-	-	h ≥ 42 mm ; t_{fix} ≥ 35mm	H	**0,9**
Solid clay bricks **Mz** acc. to EN 771-1:2011	B	20	≥ 1,8	Cross section reduced up to 15% by perforation vertically to the resting area	H	**0,9**
Calcium silicate solid bricks **KS** acc. to EN 771-2:2011	B	20	≥ 1,8		H	**0,9**
Solid concrete blocks **Vbn** acc. to EN 771-3:2011	B	20	≥ 2,0		H	**0,9**
Lightweight concrete blocks **Vbl** acc. to EN 771-3:2011	B	10	≥ 1,6		H	**0,75**
Vertically perforated clay bricks **Hlz** acc. to EN 771-1:2011	C	48	≥ 1,6	Cross section reduced between 15% and 50% by perforation vertically to the resting area. Exterior web thickness ≥ 17 mm	R	**0,75**
		12	≥ 1,0	Cross section reduced between 15% and 50% by perforation vertically to the resting area. Exterior web thickness ≥ 15 mm		**0,5**
Hollow calcium silicate brick **KSL** acc. to EN 771-2:2011	C	16	≥ 1,4	Cross section reduced between 15% and 50% by perforation vertically to the resting area. Exterior web thickness ≥ 16 mm	H	**0,5**
Lightweight concrete hollow blocks **Hbl**, acc. to EN 771-3:2011	C	10	≥ 1,2	Cross section reduced between 15% and 50% by perforation vertically to the resting area. Exterior web thickness ≥ 38 mm	H	**0,6**
Lightweight aggregate concrete **LAC**, acc. to EN 1520:2011, EN 771-3:2011	D	6	≥ 0,9	-	H	**0,4** [3]
Autoclaved aerated concrete blocks, **AAC** acc. to EN 771-4:2011	E	4	> 0,4	-	R	**0,3** [3]

[1] See Annex B1

[2] R = Rotary drilling | H = Hammer drilling

[3] Only valid for h_{nom} ≥ 55 mm

Table C3.1: Point thermal transmittance acc. to EOTA Technical Report TR 025 : 2016 – 05
fischer termoz CN 8 | fischer termoz CN 8 R

Anchor type	Thickness of insulation material h_D [mm]	Point thermal transmittance χ [W/K]
termoz CN 8 / 110-230	60 - 80	0,001
	> 80 - 180	0,000
termoz CN 8 / 250-350	200 - 300	0,000
termoz CN 8 / 370-390	> 300 - 340	0,001
termoz CN 8 R / 250-310	200 - 260	0,001

Table C3.2: Point thermal transmittance acc. to EOTA Technical Report TR 025 : 2016 – 05
fischer termoz CNplus 8 - flush mounted

<table>
<tr><th rowspan="2">Thickness of insulation material h_D [mm]</th><th colspan="5">Point thermal transmittance χ [W/K]</th></tr>
<tr><th>cat. A</th><th>cat. B</th><th>cat. C</th><th>cat. D</th><th>cat. E</th></tr>
<tr><td>60</td><td rowspan="2">0,001</td><td rowspan="2">0,001</td><td rowspan="3">0,001</td><td rowspan="3">0,001</td><td>0</td></tr>
<tr><td>80</td><td rowspan="9">0,001</td></tr>
<tr><td>100</td><td rowspan="8">0,002</td><td rowspan="8">0,002</td></tr>
<tr><td>120</td><td rowspan="3">0,002</td></tr>
<tr><td>140</td><td rowspan="2">0,002</td></tr>
<tr><td>160</td></tr>
<tr><td>180</td><td rowspan="4">0,001</td></tr>
<tr><td>200</td><td rowspan="4">0,001</td></tr>
<tr><td>220</td></tr>
<tr><td>240</td></tr>
<tr><td>260</td><td rowspan="3">0,001</td><td>0</td><td rowspan="3">0</td></tr>
<tr><td>280</td><td rowspan="3">0,001</td><td rowspan="3">0,001</td></tr>
<tr><td>300</td><td rowspan="2">0,001</td></tr>
<tr><td>320</td></tr>
<tr><td>340</td><td>-</td><td>-</td></tr>
</table>

Table C3.3: Point thermal transmittance acc. to EOTA Technical Report TR 025 : 2016 – 05
fischer termoz CNplus 8 - countersunk mounted

<table>
<tr><th rowspan="2">Thickness of insulation material h_D [mm]</th><th colspan="5">Point thermal transmittance χ [W/K]</th></tr>
<tr><th>cat. A</th><th>cat. B</th><th>cat. C</th><th>cat. D</th><th>cat. E</th></tr>
<tr><td>80</td><td rowspan="4">0,001</td><td>0</td><td>0</td><td>0</td><td rowspan="2">0</td></tr>
<tr><td>100</td><td rowspan="6">0,001</td><td rowspan="9">0,001</td><td rowspan="9">0,001</td></tr>
<tr><td>120</td><td rowspan="8">0,001</td></tr>
<tr><td>140</td></tr>
<tr><td>160</td><td rowspan="2">0,002</td></tr>
<tr><td>180</td><td>0,002</td></tr>
<tr><td>200</td><td rowspan="4">0,001</td><td rowspan="4">0,001</td></tr>
<tr><td>220</td></tr>
<tr><td>240</td></tr>
<tr><td>260</td><td rowspan="4">0</td><td rowspan="4">0</td></tr>
<tr><td>280</td><td>0</td><td>0</td><td rowspan="2">0</td></tr>
<tr><td>300</td><td rowspan="3">0,001</td><td rowspan="3">0,001</td></tr>
<tr><td>320</td><td rowspan="2">0,001</td></tr>
<tr><td>340</td><td>-</td><td>-</td></tr>
</table>

Table C4.1: Plate stiffness acc. to EOTA Technical Report TR 026 : 2016 – 05

Anchor type	Size of the anchor plate [mm]	Load resistance of the anchor plate [kN]	Plate stiffness [kN/mm]
termoz CN 8 | termoz CN 8 R	60	1,7	0,6

Table C4.2: Displacements termoz CN 8 | termoz CN 8 R

Base material		termoz CN 8 | termoz CN 8 R	
		Tension load **F** [kN]	Displacements δ [mm]
Concrete ≥ C12/15 – C50/60 (EN 206-1:2000)		0,30	< 0,3
Clay brick (EN 771-1:2011), Mz 12		0,30	< 0,5
Calcium silicate solid bricks (EN 771-2:2011), KS 12		0,30	< 0,3
Vertically perforated clay brick (EN 771-1:2011), Hlz 12		0,2	< 0,2
Hollow calcium silicate brick (EN 771-2:2011), KSL 12		0,15	< 0,2
Hollow calcium silicate brick (EN 771-2:2011), KSL 20		0,25	< 0,3
Solid concrete blocks (EN 771-3:2011), Vbn 20		0,25	< 0,3
Hollow brick lightweight concrete (EN 771-3:2011), Hbl 4		0,2	< 0,2
Lightweight concrete solid blocks (EN 771-3:2011), Vbl 8		0,2	< 0,2
Lightweight aggregate concrete (EN 1520:2011, EN 771-3:2011)	LAC 4	0,15	< 0,3
	LAC 6	0,20	
Autoclaved aerated concrete blocks EN 771-4:2011	AAC 4	0,10	< 0,2
	AAC 6	0,13	< 0,3

Table C4.3: Displacements termoz CNplus 8

Base material		termoz CNplus 8	
		Tension load **F** [kN]	Displacements δ [mm]
Concrete ≥ C12/15 – C50/60 (EN 206-1:2000)		0,30	< 0,1
Weather resistant concrete shell ≥ C20/25 (EN 206-1:2000)		0,30	< 0,1
Clay brick (EN 771-1:2011), Mz 20		0,30	< 0,2
Calcium silicate solid bricks (EN 771-2:2011), KS 20		0,30	< 0,2
Solid concrete blocks (EN 771-3:2011), Vbn 20		0,30	< 0,2
Lightweight concrete solid blocks (EN 771-3:2011), Vbl 10		0,25	< 0,1
Vertically perforated clay brick (EN 771-1:2011), Hlz 48		0,25	< 0,2
Vertically perforated clay brick (EN 771-1:2011), Hlz 12		0,17	< 0,1
Hollow calcium silicate brick (EN 771-2:2011), KSL 16		0,17	< 0,1
Hollow brick lightweight concrete (EN 771-3:2011), Hbl 10		0,20	< 0,1
Lightweight aggregate concrete (EN 1520:2011, EN 771-3:2011)	LAC 6	0,13	< 0,2
Autoclaved aerated concrete blocks (EN 771-4:2011)	AAC 4	0,10	< 0,1