# DECLARACIÓN DE PRESTACIONES

## DoP 0349

para el sistema de inyección de fischer Superbond (Anclaje químico para uso en hormigón) ES

1. Código de identificación única del producto tipo: **DoP 0349**

2. Usos previstos: **Fijación a posteriori en hormigón fisurado y no fisurado, véase el apéndice, especialmente los anexos B1 - B17.**

3. Fabricante: **fischerwerke GmbH & Co. KG, Otto-Hahn-Straße 15, 79211 Denzlingen, Alemania**

4. Representante autorizado: **–**

5. Sistemas de evaluación y verificación de la constancia de las prestaciones (EVCP): **1**

6. Documento de evaluación europeo: **EAD 330499-01-0601, Edition 04/2020**
   Evaluación técnica europea: **ETA-12/0258; 2023-10-24**
   Organismo de evaluación técnica: **DIBt- Deutsches Institut für Bautechnik**
   Organismos notificados: **2873 TU Darmstadt**

7. Prestaciones declaradas:

**Resistencia mecánica y estabilidad (BWR 1)**

**Resistencia característica a tracción (carga estática y cuasi-estática):**
- Resistencia de rotura del acero: Anexos C1 - C3
- Resistencia para la combinación de rotura por cono de hormigón y extracción: Anexos C4-C10
- Resistencia de rotura por cono de hormigón: Anexo C4
- Distancia al borde para evitar la rotura del acero sometido a carga: Anexo C4
- Robustez: Anexos C4-C10
- Par máximo de montaje: Anexos B4-B6,B8
- Distancia mínima entre el borde y el centro: Anexos B4 - B8

**Resistencia característica a cortante (carga estática y cuasi-estática):**
- Resistencia de rotura del acero: Anexos C2, C3
- Resistencia falla por arrancamiento lateral: Anexo C4
- Resistencia de rotura del hormigón al borde: Anexo C4

**Desplazamientos bajo carga a corto y largo plazo:**
- Desplazamientos bajo carga a corto y largo plazo: Anexos C11, C12

**Resistencia y desplazamientos característicos para las categorías sísmicas C1 y C2:**
- Resistencia a carga de tracción, desplazamientos, categoría C1: Anexos C13 - C15
- Resistencia a carga de tracción, desplazamientos, categoría C2: Anexos C13, C16
- Resistencia a esfuerzo cortante, desplazamientos, categoría C1: Anexos C13, C14
- Resistencia a esfuerzo cortante, desplazamientos, categoría C2: Anexos C13, C16
- Factor espacio anular: Anexo C13

**Higiene, salud y medio ambiente (BWR 3)**
- Contenido, emisión y/o desprendimiento de sustancias peligrosas: NPD

8. Documentación técnica adecuada o documentación técnica específica: **–**

Las prestaciones del producto identificado anteriormente son conformes con el conjunto de prestaciones declaradas. La presente declaración de prestaciones se emite, de conformidad con el Reglamento (UE) no 305/2011, bajo la sola responsabilidad del fabricante arriba identificado.

Firmado por y en nombre del fabricante por:

Dr.-Ing. Oliver Geibig, Director General Unidades de Negocio e Ingeniería

Jürgen Grün, Director General de Química y Calidad

Tumlingen, 2023-11-17

Esta DdR se ha preparado en distintos idiomas. En caso de que haya alguna controversia sobre la interpretación prevalecerá siempre la versión inglesa.

El Apéndice incluye información voluntaria y complementaria en idioma inglés que excede los requisitos legales (de idioma neutral).

Translation guidance Essential Characteristics and Performance Parameters for Annexes

**Glosario de parámetros esenciales, característicos y de prestaciones para los anexos**

| | | | |
|---|---|---|---|
| Mechanical resistance and stability (BWR 1)<br>**Resistencia mecánica y estabilidad (BWR 1)** | | | |
| Characteristic resistance to tension load (static and quasi-static loading):<br>**Resistencia característica a tracción (carga estática y cuasi-estática):** | | | |
| 1 | Resistance to steel failure:<br>**Resistencia de rotura del acero:** | | $N_{Rk,s}$ [kN] |
| 2 | Resistance to combined pull- out and concrete cone failure:<br>**Resistencia para la combinación de rotura por cono de hormigón y extracción:** | | $T_{Rk}$ and/or $T_{Rk,100}$ [N/mm$^2$], $\psi^0_{sus}$ [-] (BF)<br>$N_{Rk,p}$ and/or $N_{Rk,p,100}$ [kN] (BEF) |
| 3 | Resistance to concrete cone failure:<br>**Resistencia de rotura por cono de hormigón:** | | $c_{cr,N}$ [mm], $k_{cr,N}$, $k_{ucr,N}$ [-] |
| 4 | Edge distance to prevent splitting under load:<br>**Distancia al borde para evitar la rotura del acero sometido a carga:** | | $c_{cr,sp}$ [mm] |
| 5 | Robustness:<br>**Robustez:** | | $\gamma_{inst}$ [-] |
| 6 | Maximum installation torque:<br>**Par máximo de montaje:** | | max $T_{inst}$ [Nm] (BF) |
| | Installation torque:<br>**Par de montaje:** | | $T_{inst}$ [Nm] (BEF) |
| 7 | Minimum edge distance and spacing:<br>**Distancia mínima entre el borde y el centro:** | | $c_{min}$, $s_{min}$, $h_{min}$ [mm] |
| Characteristic resistance to shear load (static and quasi-static loading):<br>**Resistencia característica a cortante (carga estática y cuasi-estática):** | | | |
| 8 | Resistance to steel failure:<br>**Resistencia de rotura del acero:** | | $V^0_{Rk,s}$ [kN], $M^0_{Rk,s}$ [Nm], $k_7$ [-] |
| 9 | Resistance to pry-out failure:<br>**Resistencia falla por arrancamiento lateral:** | | $k_8$ [-] |
| 10 | Resistance to concrete edge failure:<br>**Resistencia de rotura del hormigón al borde:** | | $d_{nom}$, $l_f$ [mm] |
| Displacements under short-term and long-term loading:<br>**Desplazamientos bajo carga a corto y largo plazo:** | | | |
| 11 | Displacements under short-term and long-term loading:<br>**Desplazamientos bajo carga a corto y largo plazo:** | | $\delta_0$, $\delta_\infty$ [mm or mm/(N/mm$^2$)] |
| Characteristic resistance and displacements for seismic performance categories C1 and C2:<br>**Resistencia y desplazamientos característicos para las categorías sísmicas C1 y C2:** | | | |
| 12 | Resistance to tension load, displacements: | | |
| | **Resistencia a carga de tracción, desplazamientos, categoría C1:** | C1 | $N_{Rk,s,C1}$ [kN] (all)<br>$\tau_{Rk,C1}$ [N/mm$^2$] (BF)<br>$N_{Rk,p,C1}$ [kN] (BEF) |
| | **Resistencia a carga de tracción, desplazamientos, categoría C2:** | C2 | $N_{Rk,s,C2}$ [kN] (all)<br>$\tau_{Rk,C2}$ [N/mm$^2$] (BF)<br>$N_{Rk,p,C2}$ [kN] (BEF)<br>$\delta_{N,C2}$ [mm] (all) |
| 13 | Resistance to shear load, displacements: | | |
| | **Resistencia a esfuerzo cortante, desplazamientos, categoría C1:** | C1 | $V_{Rk,s,C1}$ [kN] (all) |
| | **Resistencia a esfuerzo cortante, desplazamientos, categoría C2:** | C2 | $V_{Rk,s,C2}$ [kN] (all)<br>$\delta_{V,C2}$ [mm] (all) |
| 14 | Factor annular gap:<br>**Factor espacio anular:** | | $\alpha_{gap}$ [-] |
| Hygiene, health and the environment (BWR 3)<br>**Higiene, salud y medio ambiente (BWR 3)** | | | |
| 15 | Content, emission and/or release of dangerous substances:<br>**Contenido, emisión y/o desprendimiento de sustancias peligrosas:** | | - |

**Specific Part**

## 1 Technical description of the product

The injection system fischer Superbond is a bonded anchor for use in concrete consisting of a cartridge with injection mortar fischer FIS SB or a resin capsule fischer RSB and a steel element according to Annex A 5.

The steel element is placed into a drilled hole filled with injection mortar and is anchored via the bond between metal part, injection mortar and concrete.

The resin capsule is placed into a drilled hole and the steel element is driven by rotary hammer drill or tangential impact screw driver or cordless drill screw driver. The anchor rod is anchored via the bond between steel element, chemical mortar and concrete.

The product description is given in Annex A.

## 2 Specification of the intended use in accordance with the applicable European Assessment Document

The performances given in Section 3 are only valid if the anchor is used in compliance with the specifications and conditions given in Annex B.

The verifications and assessment methods on which this European Technical Assessment is based lead to the assumption of a working life of the anchor of at least 50 years. The indications given on the working life cannot be interpreted as a guarantee given by the producer, but are to be regarded only as a means for choosing the right products in relation to the expected economically reasonable working life of the works.

## 3 Performance of the product and references to the methods used for its assessment

### 3.1 Mechanical resistance and stability (BWR 1)

| Essential characteristic | Performance |
|---|---|
| Characteristic resistance to tension load (static and quasi-static loading) | See Annex B 4 to B 8, C 1 to C 10 |
| Characteristic resistance to shear load (static and quasi-static loading) | See Annex C 1 to C 4 |
| Displacements under short-term and long-term loading | See Annex C 11 and C 12 |
| Characteristic resistance and displacements for seismic performance categories C1 and C2 | See Annex C 13 to C 16 |

### 3.2 Hygiene, health and the environment (BWR 3)

| Essential characteristic | Performance |
|---|---|
| Content, emission and/or release of dangerous substances | No performance assessed |

## 4 Assessment and verification of constancy of performance (AVCP) system applied, with reference to its legal base

In accordance with the European Assessment Document EAD 330499-01-0601 the applicable European legal act is: [96/582/EC].

The system to be applied is: 1

# Installation conditions part 1

**anchor rod or fischer anchor rod RG M with fischer injection system FIS SB**

**Pre-positioned installation**

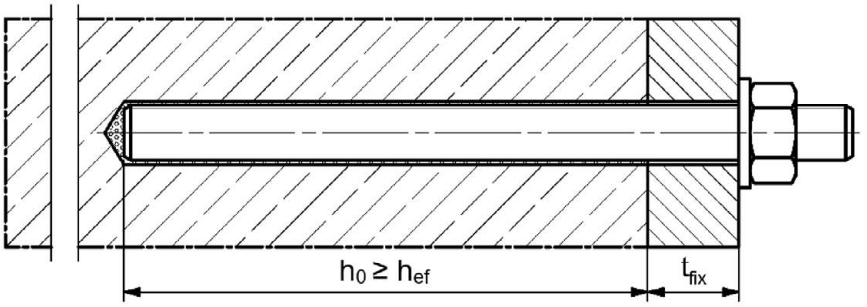


**Push through installation** (annular gap filled with mortar)

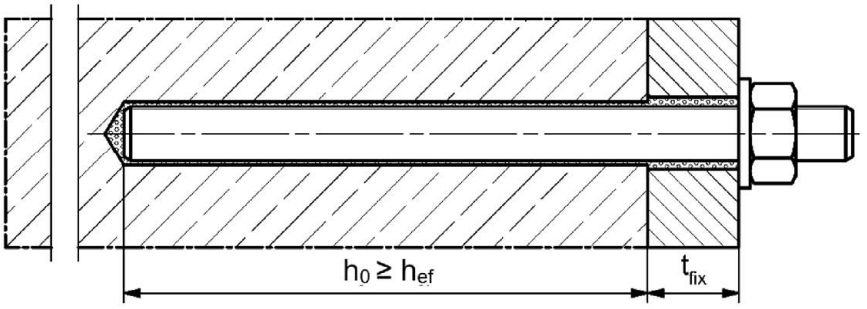


**Pre-positioned or push through installation with subsequently injected fischer filling disk**
(annular gap filled with mortar)

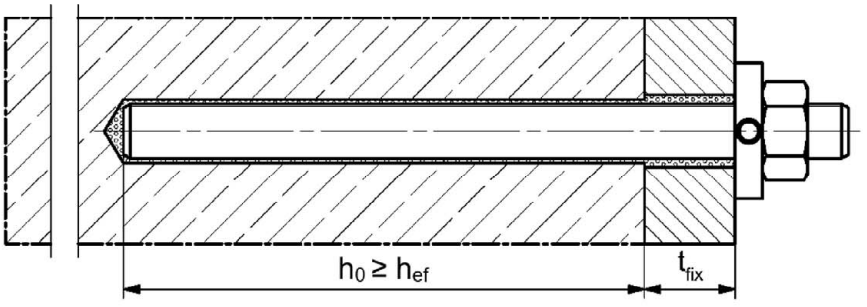


Figures not to scale

$h_0$ = drill hole depth

$h_{ef}$ = effective embedment depth

$t_{fix}$ = thickness of fixture

fischer Superbond

**Product description**
Installation conditions part 1

**Annex A 1**

## Installation conditions part 2

**Reinforcing bar with fischer injection system FIS SB**

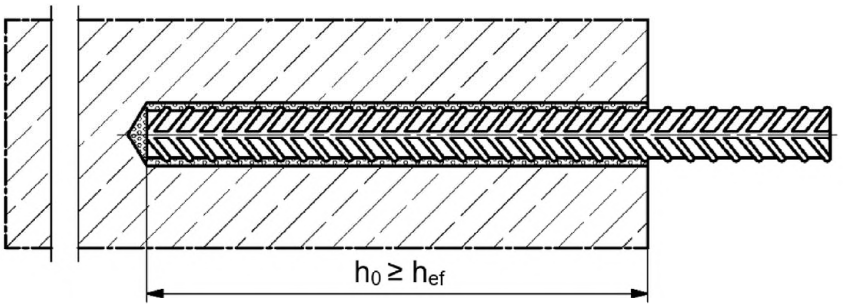


**fischer rebar anchor FRA with fischer injection system FIS SB**

**Pre-positioned installation**

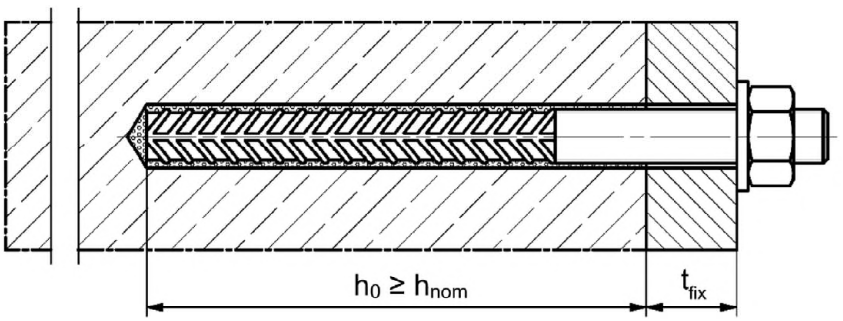


**Push through installation** (annular gap filled with mortar)

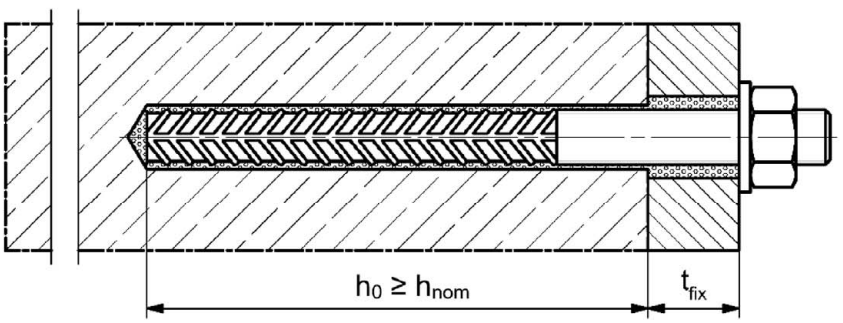


Figures not to scale

| | | | |
|---|---|---|---|
| $h_0$ | = drill hole depth | $h_{ef}$ | = effective embedment depth |
| $t_{fix}$ | = thickness of fixture | $h_{nom}$ | = overall fastener embedment depth in the concrete |

## Installation conditions part 3

**fischer internal threaded anchor RG M I with fischer resin capsule system RSB or fischer injection system FIS SB**

**Pre-positioned installation**

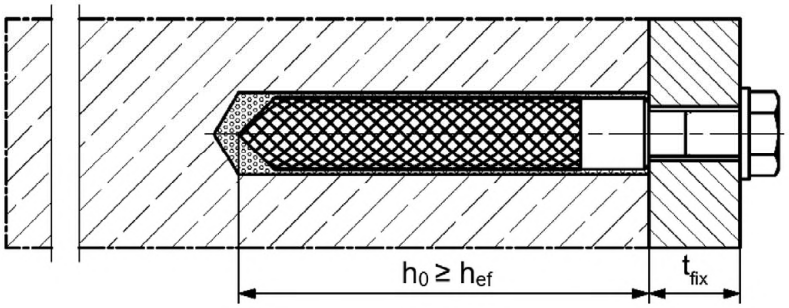


**Pre-positioned installation with subsequently injected fischer filling disk** (annular gap filled with mortar)

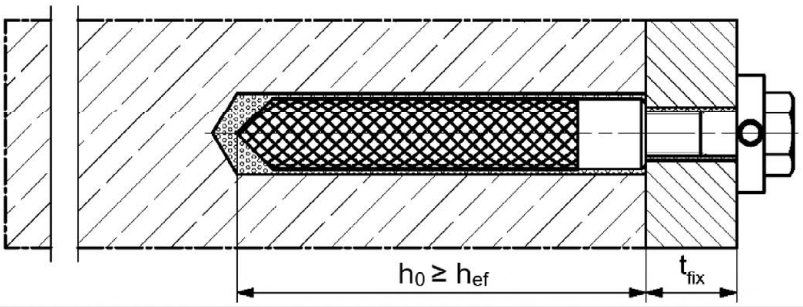


**fischer anchor rod RG M with fischer resin capsule system RSB**

**Pre-positioned installation**

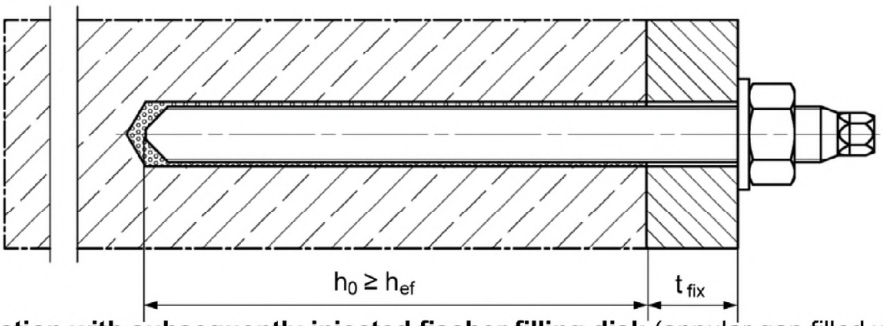


**Pre-positioned installation with subsequently injected fischer filling disk** (annular gap filled with mortar)

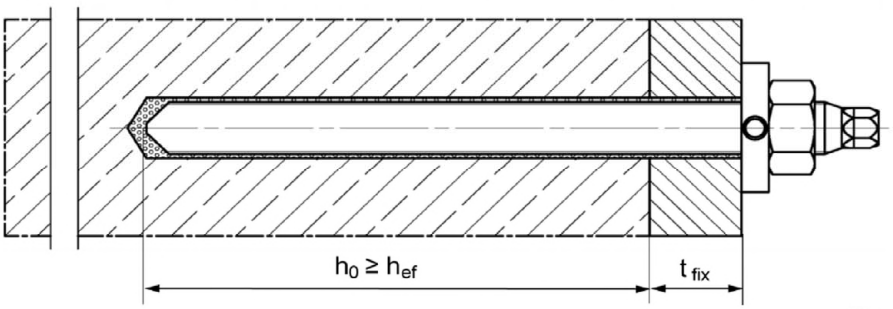


Figures not to scale

$h_0$ = drill hole depth

$h_{ef}$ = effective embedment depth

$t_{fix}$ = thickness of fixture

fischer Superbond

**Product description**
Installation conditions part 3

**Annex A 3**

## Overview system components Part 1

**Injection cartridge (shuttle cartridge) with sealing cap; Size: 390 ml, 585 ml, 1500 ml**

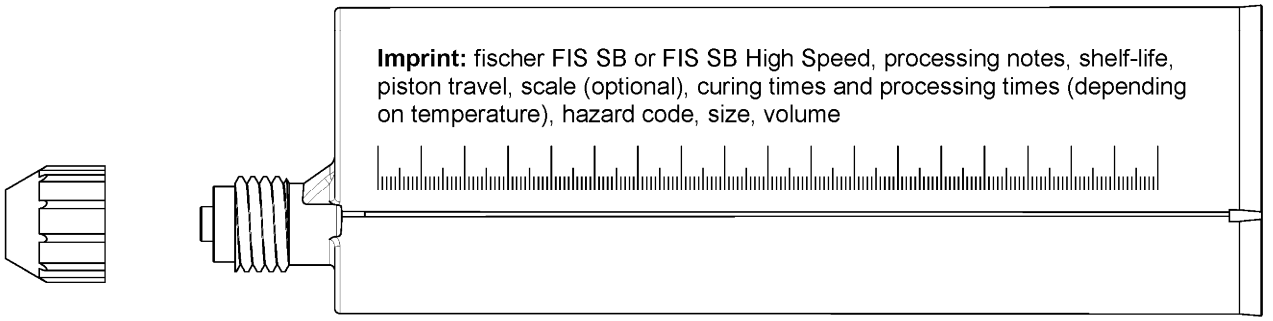


**Resin capsule**

Sizes: 8, 10 mini, 10, 12 mini, 12, 16 mini, 16, 16 E, 20, 20 E / 24, 30

**Static mixer FIS MR Plus for Injection cartridge 390 ml**

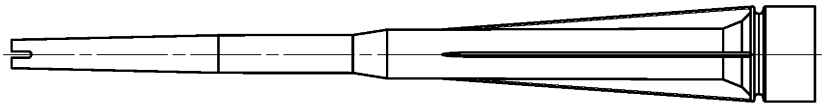

**Static mixer FIS UMR Injection cartridges ≥ 585 ml**

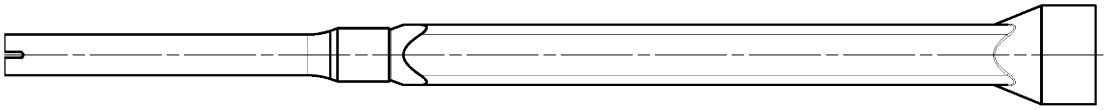

**Injection adapter and extension tube Ø 9 for static mixer FIS MR Plus;**
**Injection adapter and extension tube Ø 9 or Ø 15 for static mixer FIS UMR**

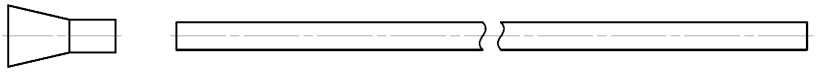

Figures not to scale

## Overview system components Part 2

**anchor rod**

Sizes: M8, M10, M12, M16, M20, M24, M27, M30

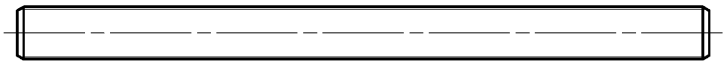

**fischer anchor rod RG M**

Sizes: M8, M10, M12, M16, M20, M24, M30

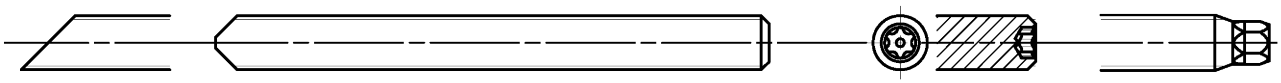

**fischer internal threaded anchor RG M I**

Size: M8, M10, M12, M16, M20

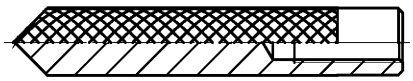

**Screw / threaded rod / washer / hexagon nut**

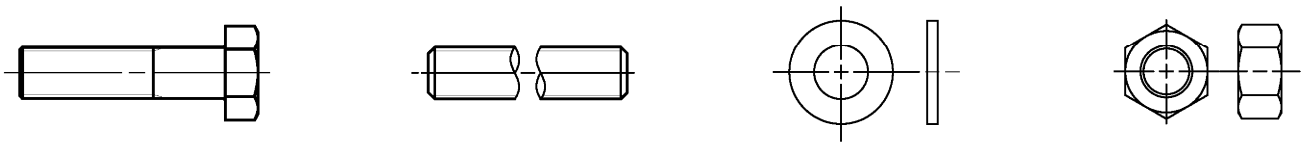

**fischer filling disc with injection adapter**

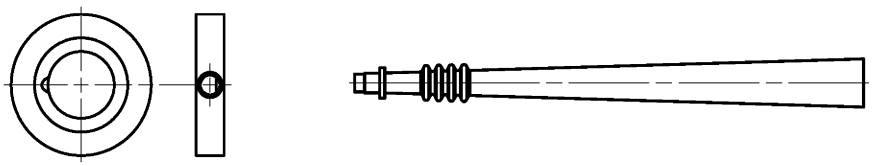

**Reinforcing bar**

Nominal diameters: ϕ8, ϕ10, ϕ12, ϕ14, ϕ16, ϕ20, ϕ25, ϕ28, ϕ32

**fischer rebar anchor FRA**

Sizes: M12, M16, M20, M24

Figures not to scale

fischer Superbond

**System description**
Overview system components part 2;
steel components, injection adapter

**Annex A 5**

## Overview system components Part 3

**Cleaning brush BS**

**Blow-out pump AB G**

**Compressed-air cleaning tool ABP**

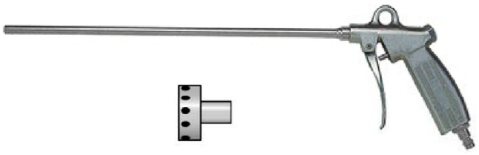

Figures not to scale

fischer Superbond

**System description**
Overview system components part 3;
cleaning brush / blow-out pump

**Annex A 6**

## Table A7.1: Materials

| Part | Designation | Material | | |
|---|---|---|---|---|
| 1 | Injection cartridge | Mortar, hardener, filler | | |
| | Steel grade | Steel | Stainless steel R | High corrosion resistant steel HCR [2)] |
| | | zinc plated | acc. to EN 10088-1:2014 Corrosion resistance class CRC III acc. to EN 1993-1-4:2006+A1:2015 | acc. to EN 10088-1:2014 Corrosion resistance class CRC V acc. to EN 1993-1-4:2006+A1:2015 |
| 2 | Anchor rod | Property class 4.8, 5.8 or 8.8; EN ISO 898-1:2013 zinc plated ≥ 5 µm, EN ISO 4042:2022/Zn5/An(A2K) or hot dip galvanised ≥ 40 µm EN ISO 10684:2004 $f_{uk}$ ≤ 1000 N/mm² $A_5$ > 12% fracture elongation | Property class 50, 70 or 80 EN ISO 3506-1:2020 1.4401; 1.4404; 1.4578; 1.4571; 1.4439; 1.4362; 1.4062, 1.4662, 1.4462; EN 10088-1:2014 $f_{uk}$ ≤ 1000 N/mm² $A_5$ > 12% fracture elongation | Property class 50 or 80 EN ISO 3506-1:2020 or property class 70 with $f_{yk}$= 560 N/mm² 1.4565; 1.4529; EN 10088-1:2014 $f_{uk}$ ≤ 1000 N/mm² $A_5$ > 12% fracture elongation |
| | | Fracture elongation $A_5$ > 8 %, for applications without requirements for seismic performance category C2 | | |
| 3 | Washer ISO 7089:2000 | zinc plated ≥ 5 µm, EN ISO 4042:2022/Zn5/An(A2K), or hot dip galvanised ≥ 40 µm EN ISO 10684:2004 | 1.4401; 1.4404; 1.4578;1.4571; 1.4439; 1.4362; EN 10088-1:2014 | 1.4565; 1.4529; EN 10088-1:2014 |
| 4 | Hexagon nut | Property class 4, 5 or 8; EN ISO 898-2:2012 zinc plated ≥ 5 µm, EN ISO 4042:2022/Zn5/An(A2K), or hot dip galvanised ≥ 40 µm EN ISO 10684:2004 | Property class 50, 70 or 80 EN ISO 3506-2:2020 1.4401; 1.4404; 1.4578; 1.4571; 1.4439; 1.4362; EN 10088-1:2014 | Property class 50, 70 or 80 EN ISO 3506-2:2020 1.4565; 1.4529 EN 10088-1:2014 |
| 5 | fischer internal threaded anchor RG M I | Property class 5.8 ISO 898-1:2013 zinc plated ≥ 5 µm, EN ISO 4042:2022/Zn5/An(A2K) | Property class 70 EN ISO 3506-1:2020 1.4401; 1.4404; 1.4578; 1.4571; 1.4439; 1.4362; EN 10088-1:2014 | Property class 70 EN ISO 3506-1:2020 1.4565; 1.4529; EN 10088-1:2014 |
| 6 | Commercial standard screw or threaded rod for fischer internal threaded anchor RG M I | Property class 5.8 or 8.8; EN ISO 898-1:2013 zinc plated ≥ 5 µm, EN ISO 4042:2022/Zn5/An(A2K) $A_5$ > 8 % fracture elongation | Property class 70 EN ISO 3506-1:2020 1.4401; 1.4404; 1.4578; 1.4571; 1.4439; 1.4362; EN 10088-1:2014 $A_5$ > 8 % fracture elongation | Property class 70 EN ISO 3506-1:2020 1.4565; 1.4529; EN 10088-1:2014 $A_5$ > 8 % fracture elongation |
| 7 | fischer filling disk similar to DIN 6319-G | zinc plated ≥ 5 µm, EN ISO 4042:2022/Zn5/An(A2K) or hot dip galvanised ≥ 40 µm EN ISO 10684:2004 | 1.4401; 1.4404; 1.4578; 1.4571; 1.4439; 1.4362; EN 10088-1:2014 | 1.4565;1.4529; EN 10088-1:2014 |
| 8 | Reinforcing bar EN 1992-1-1:2004 and AC:2010, Annex C | Bars and de-coiled rods, class B or C with $f_{yk}$ and k according to NDP or NCI according to EN 1992-1-1/NA $f_{uk} = f_{tk} = k \cdot f_{yk}$ ($A_5$ > 8%) | | |
| 9 | fischer rebar anchor FRA | Rebar part: Bars and de-coiled rods class B or C with $f_{yk}$ and k according to NDP or NCI of EN 1992-1-1:2004+AC:2010 / $f_{uk} = f_{tk} = k \cdot f_{yk}$ ($A_5$ > 8%) Threaded part: Property class 80 EN ISO 3506-1:2020 | 1.4401, 1.4404, 1.4571, 1.4578, 1.4439, 1.4362, 1.4062 acc. to EN 10088-1:2014 Corrosion resistance class CRC III acc. to EN 1993-1-4:2006+A1:2015 1.4565; 1.4529 acc. to EN 10088-1:2014 Corrosion resistance class CRC V acc. to EN 1993-1-4: 2006+A1:2015 $f_{uk}$ ≤ 1000 N/mm²; ($A_5$ > 8%) | |

## Specifications of intended use part 1

**Table B1.1:** Overview use and performance categories, **injection mortar system FIS SB**

| Anchorages subject to | | **FIS SB with …** | | | | | | | |
|---|---|---|---|---|---|---|---|---|---|
| | | Anchor rod | | fischer internal threaded anchor RG M I | | Reinforcing bar | | fischer rebar anchor FRA | |
| Hammer drilling with standard drill bit | | all sizes | | | | | | | |
| Hammer drilling with hollow drill bit (fischer "FHD", Heller "Duster Expert"; Bosch „Speed Clean"; Hilti "TE-CD, TE-YD", DreBo „D-Plus", DreBo „D-Max") | | Nominal drill bit diameter ($d_0$) 12 mm to 35 mm | | | | | | | |
| Diamond drilling | | -[1] | | | | | | | |
| Static and quasi static loading, in | uncracked concrete | all sizes | Tables: C1.1 C4.1 C5.1 C11.1 | all sizes | Tables: C2.1 C4.1 C7.1 C11.2 | all sizes | Tables: C3.1 C4.1 C9.1 C12.1 | all sizes | Tables: C3.2 C4.1 C10.1 C12.2 |
| | cracked concrete | | | | | | | | |
| Seismic performance category (only hammer drilling with standard / hollow drill bits) | C1 | all sizes | Tables: C13.1 C14.2 C15.1 | -[1] | | all sizes | Tables: C14.1 C14.2 C15.2 | -[1] | |
| | C2 | M12 M16 M20 M24 | Tables: C13.1 C14.2 C16.1 | | | -[1] | -[1] | | |
| Use category | I1 dry or wet concrete | all sizes | | | | | | | |
| | I2 water filled hole | -[1] | | | | | | | |
| Installation direction | | D3 (downward and horizontal and upwards (e.g., overhead)) | | | | | | | |
| Installation method | | pre-positioned or push through installation | | | | | | | |
| Installation temperature | | FIS SB: $T_{i,min}$ = -15 °C to $T_{i,max}$ = +40 °C<br>FIS SB High Speed: $T_{i,min}$ = -20 °C to $T_{i,max}$ = +40 °C | | | | | | | |
| Service temperature | Temperature range I | -40 °C to +40 °C | $T_{st}$ = +40 °C / $T_{lt}$ = +24 °C | | | | | | |
| | Temperature range II | -40 °C to +80 °C | $T_{st}$ = +80 °C / $T_{lt}$ = +50 °C | | | | | | |
| | Temperature range III | -40 °C to +120 °C | $T_{st}$ = +120 °C / $T_{lt}$ = +72 °C | | | | | | |
| | Temperature range IV | -40 °C to +150 °C | $T_{st}$ = +150 °C / $T_{lt}$ = +90 °C | | | | | | |

[1] No performance assessed.

## Specifications of intended use part 2

**Table B2.1:** Overview use and performance categories, **resin capsule system RSB**

| Anchorages subject to | | | **RSB with …** | | | |
|---|---|---|---|---|---|---|
| | | | fischer anchor rod RG M | | fischer internal threaded anchor RG MI | |
| Hammer drilling with standard drill bit  | | | all sizes | | | |
| Hammer drilling with hollow drill bit (fischer "FHD", Heller "Duster Expert"; Bosch „Speed Clean"; Hilti "TE-CD, TE-YD", DreBo „D-Plus", DreBo „D-Max") | | | Nominal drill bit diameter ($d_0$) 12 mm to 35 mm | | all sizes | |
| Diamond drilling | | | all sizes [1] | | | |
| Static and quasi static loading, in | uncracked concrete | | all sizes | Tables: C1.1 C4.1 C6.1 C11.1 | all sizes | Tables: C2.1 C4.1 C8.1 C11.2 |
| | cracked concrete | | all sizes [1] | | all sizes [1] | |
| Seismic performance category (only hammer drilling with standard / hollow drill bits) | C1 | | all sizes | Tables: C13.1 C14.2 C15.1 | -[2] | |
| | C2 | | -[2] | | | |
| Use category | I1 | dry or wet concrete | all sizes | | | |
| | I2 | water filled hole | all sizes | | | |
| Installation direction | | | D3 (downward and horizontal and upwards (e.g. overhead)) | | | |
| Installation method | | | only pre-positioned installation | | | |
| Installation temperature | | | $T_{i,min}$ = -30 °C to $T_{i,max}$ = +40 °C | | | |
| Service temperature | Temperature range I | | -40 °C to +40 °C | $T_{st}$ = +40 °C / $T_{lt}$ = +24 °C | | |
| | Temperature range II | | -40 °C to +80 °C | $T_{st}$ = +80 °C / $T_{lt}$ = +50 °C | | |
| | Temperature range III | | -40 °C to +120 °C | $T_{st}$ = +120 °C / $T_{lt}$ = +72 °C | | |
| | Temperature range IV | | -40 °C to +150 °C | $T_{st}$ = +150 °C / $T_{lt}$ = +90 °C | | |

[1] For diamond drilling in cracked concrete only nominal drill bit diameters ($d_0$) ≥ 18 mm are permitted.
[2] No performance assessed.

## Specifications of intended use part 3

**Base materials:**

- Compacted reinforced or unreinforced normal weight concrete without fibres of strength classes C20/25 to C50/60 according to EN 206:2013+A1:2016

**Use conditions (Environmental conditions):**

- Structures subject to dry internal conditions
  (zinc coated steel, stainless steel or high corrosion resistant steel).
- For all other conditions according to EN1993-1-4:2006+A1:2015 corresponding to corrosion resistance classes to Annex A 7 Table A7.1.

**Design:**

- Fastenings have to be designed by a responsible engineer with experience of concrete anchor design.
- Verifiable calculation notes and drawings are to be prepared taking account of the loads to be anchored. The position of the anchor is indicated on the design drawings (e. g. position of the anchor relative to reinforcement or to supports, etc.).
- Fastenings are designed in accordance with:
  EN 1992-4:2018 and EOTA Technical Report TR 055, Edition February 2018.

**Installation:**

- Fastener installation is to be carried out by appropriately qualified personnel and under the supervision of the person responsible for technical matters of the site.
- In case of aborted hole: The hole shall be filled with mortar.
- Fastening depth should be marked and adhered to on installation.
- Overhead installation is allowed (necessary equipment see installation instruction).

**Table B4.1:** Installation parameters for **anchor rods** in combination with **injection mortar system FIS SB**

| Anchor rods | | Thread | M8 | M10 | M12 | M16 | M20 | M24 | M27 | M30 |
|---|---|---|---|---|---|---|---|---|---|---|
| Nominal drill hole diameter | $d_0$ | | 10 | 12 | 14 | 18 | 24 | 28 | 30 | 35 |
| Drill hole depth | $h_0$ | | $h_0 \geq h_{ef}$ | | | | | | | |
| Effective embedment depth | $h_{ef,\,min}$ | | 60 | 60 | 70 | 80 | 90 | 96 | 108 | 120 |
| | $h_{ef,\,max}$ | | 160 | 200 | 240 | 320 | 400 | 480 | 540 | 600 |
| Minimum spacing and minimum edge distance | $s_{min}$ = $c_{min}$ | [mm] | 40 | 45 | 55 | 65 | 85 | 105 | 120 | 140 |
| Diameter of the clearance hole of the fixture – pre-positioned installation | $d_f$ | | 9 | 12 | 14 | 18 | 22 | 26 | 30 | 33 |
| Diameter of the clearance hole of the fixture – push through installation | $d_f$ | | 11 | 14 | 16 | 20 | 26 | 30 | 33 | 40 |
| Min. thickness of concrete member | $h_{min}$ | | $h_{ef}$ + 30 (≥ 100) | | | $h_{ef} + 2d_0$ | | | | |
| Maximum setting torque | max $T_{inst}$ | [Nm] | 10 | 20 | 40 | 60 | 120 | 150 | 200 | 300 |

**fischer anchor rod**

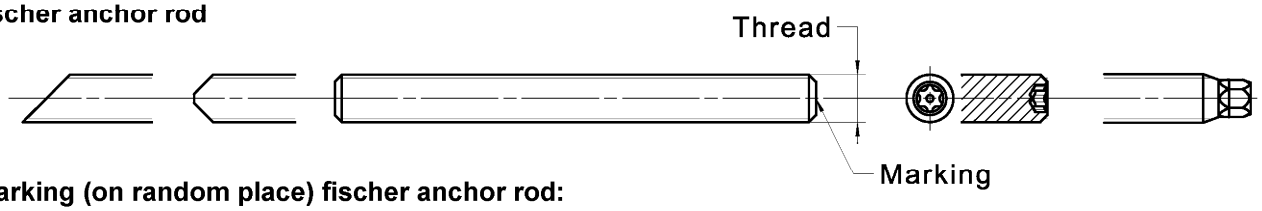


**Marking (on random place) fischer anchor rod:**

| | | | |
|---|---|---|---|
| Steel zinc plated PC[1] 8.8 | ● or + | Steel hot-dip PC[1] 8.8 | ● |
| High corrosion resistant steel HCR PC[1] 50 | ● | High corrosion resistant steel HCR PC[1] 70 | - |
| High corrosion resistant steel HCR PC[1] 80 | ( | Stainless steel R property class 50 | ~ |
| Stainless steel R property class 80[1] | * | | |
| Alternatively: Colour coding according to DIN 976-1: 2016 | | | |

[1] PC = property class

**Installation conditions:**

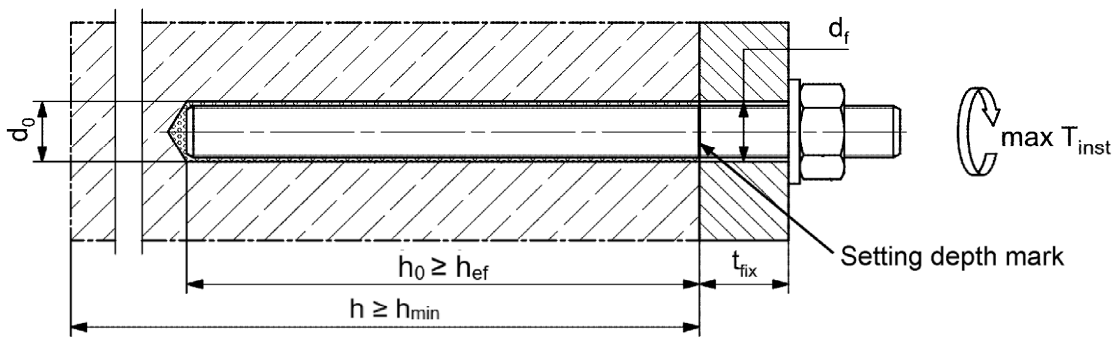


**Commercial standard threaded rods, washers and hexagon nuts may also be used if the following requirements are fulfilled:**

- Materials, dimensions and mechanical properties according to **Annex A 7, Table A7.1**.
- Inspection certificate 3.1 according to EN 10204:2004, the documents have to be stored.
- Setting depth is marked.

Figures not to scale

**Table B5.1:** Installation parameters for **fischer anchor rods RG M** in combination with **resin capsule system RSB**

| Anchor rod RG M | | Thread | M8 | M10 | M12 | M16 | M20 | M24 | M30 |
|---|---|---|---|---|---|---|---|---|---|
| Nominal drill hole diameter | $d_0$ | [mm] | 10 | 12 | 14 | 18 | 25 | 28 | 35 |
| Drill hole depth | $h_0$ | | $h_0 \geq h_{ef}$ | | | | | | |
| Effective embedment depth | $h_{ef,1}$ | | --- | 75 | 75 | 95 | --- | --- | --- |
| | $h_{ef,2}$ | | 80 | 90 | 110 | 125 | 170 | 210 | 280 |
| | $h_{ef,3}$ | | --- | 150 | 150 | 190 | 210 | --- | --- |
| Minimum spacing and minimum edge distance | $s_{min}$ = $c_{min}$ | | 40 | 45 | 55 | 65 | 85 | 105 | 140 |
| Diameter of the clearance hole of the fixture pre-positioned installation | $d_f$ | | 9 | 12 | 14 | 18 | 22 | 26 | 33 |
| Min. thickness of concrete member | $h_{min}$ | | $h_{ef}$ + 30 (≥ 100) | | | $h_{ef} + 2d_0$ | | | |
| Maximum setting torque | max $T_{inst}$ | [Nm] | 10 | 20 | 40 | 60 | 120 | 150 | 300 |

**fischer anchor rod RG M**

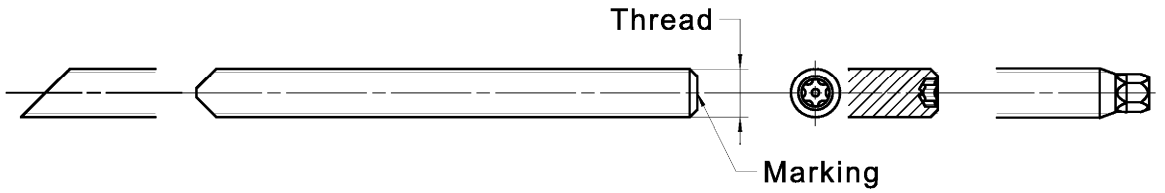


**Marking (on random place) fischer anchor rod RG M:**

| | | | |
|---|---|---|---|
| Steel zinc plated PC[1)] 8.8 | • or + | Steel hot-dip PC[1)] 8.8 | • |
| High corrosion resistant steel HCR PC[1)] 50 | • | High corrosion resistant steel HCR PC[1)] 70 | - |
| High corrosion resistant steel HCR PC[1)] 80 | ( | Stainless steel R property class 50 | ~ |
| Stainless steel R property class 80 | * | | |

Alternatively: Colour coding according to DIN 976-1:2016

[1)] PC = property class

**Installation conditions:**

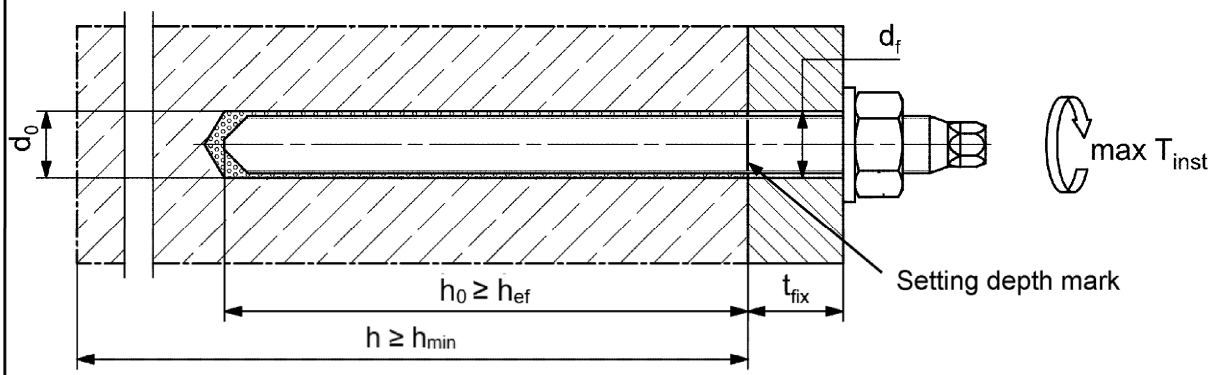


Figures not to scale

fischer Superbond

**Intended use**
Installation parameters for fischer anchor rods RG M in combination with resin capsule system RSB

**Annex B 5**

**Table B6.1:** Installation parameters for **fischer internal threaded anchors RG M I**

| Internal threaded anchor RG M I | | Thread | M8 | M10 | M12 | M16 | M20 |
|---|---|---|---|---|---|---|---|
| Sleeve diameter | $d_{nom} = d_H$ | [mm] | 12 | 16 | 18 | 22 | 28 |
| Nominal drill hole diameter | $d_0$ | | 14 | 18 | 20 | 24 | 32 |
| Drill hole depth | $h_0$ | | $h_0 \geq h_{ef} = L_H$ | | | | |
| Effective embedment depth ($h_{ef} = L_H$) | $h_{ef}$ | | 90 | 90 | 125 | 160 | 200 |
| Minimum spacing and minimum edge distance | $s_{min}$ = $c_{min}$ | | 55 | 65 | 75 | 95 | 125 |
| Diameter of clearance hole in the fixture | $d_f$ | | 9 | 12 | 14 | 18 | 22 |
| Minimum thickness of concrete member | $h_{min}$ | | 120 | 125 | 165 | 205 | 260 |
| Maximum screw-in depth | $l_{E,max}$ | | 18 | 23 | 26 | 35 | 45 |
| Minimum screw-in depth | $l_{E,min}$ | | 8 | 10 | 12 | 16 | 20 |
| Maximum installation torque | max $T_{inst}$ | [Nm] | 10 | 20 | 40 | 80 | 120 |

**fischer internal threaded anchor RG M I**

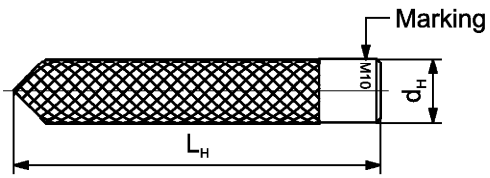


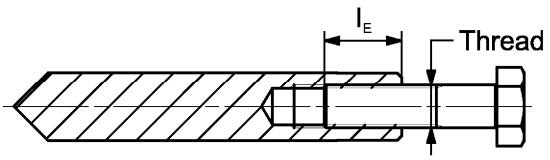


**Marking:** Anchor size e. g.: **M10**
Stainless steel → additional R; e.g.: **M10 R**
High corrosion resistant steel R→ additional C; e.g.: **M10 HCR**

Retaining bolt or threaded rods (including nut and washer) must comply with the appropriate material and strength class of **Annex A 7**, **Table A7.1**.

**Installation conditions:**

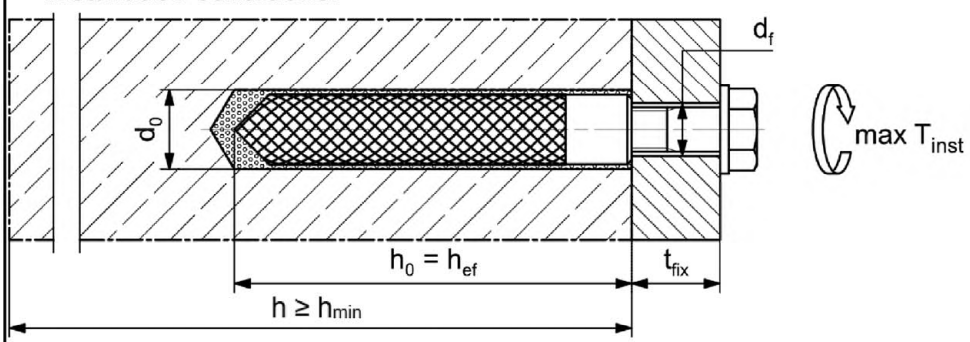


Figures not to scale

**Table B7.1:** Installation parameters for **reinforcing bars**

| **Nominal diameter of the bar** | | **ϕ** | **8[1)]** | **10[1)]** | **12[1)]** | **14** | **16** | **20** | **25** | **28** | **32** |
|---|---|---|---|---|---|---|---|---|---|---|---|
| Nominal drill hole diameter | $d_0$ | [mm] | 10 / 12 | 12 / 14 | 14 / 16 | 18 | 20 | 25 | 30 | 35 | 40 |
| Drill hole depth | $h_0$ | | $h_0 \geq h_{ef}$ | | | | | | | | |
| Effective embedment depth | $h_{ef,min}$ | | 60 | 60 | 70 | 75 | 80 | 90 | 100 | 112 | 128 |
| | $h_{ef,max}$ | | 160 | 200 | 240 | 280 | 320 | 400 | 500 | 560 | 640 |
| Minimum spacing and minimum edge distance | $s_{min}$ = $c_{min}$ | | 40 | 45 | 55 | 60 | 65 | 85 | 110 | 130 | 160 |
| Minimum thickness of concrete member | $h_{min}$ | | $h_{ef}$ + 30 (≥ 100) | | | $h_{ef} + 2d_0$ | | | | | |

[1)] Both drill hole diameters can be used

**Reinforcing bar**

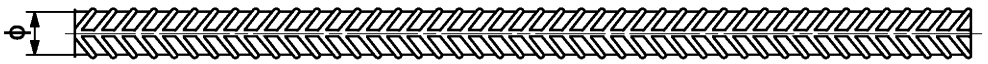


- The minimum value of related rib area $f_{R,min}$ must fulfil the requirements of EN 1992-1-1:2004+AC:2010
- The rib height must be within the range: $0{,}05 \cdot \phi \leq h_{rib} \leq 0{,}07 \cdot \phi$
  ($\phi$ = Nominal diameter of the bar, $h_{rib}$ = rib height)

**Installation conditions:**

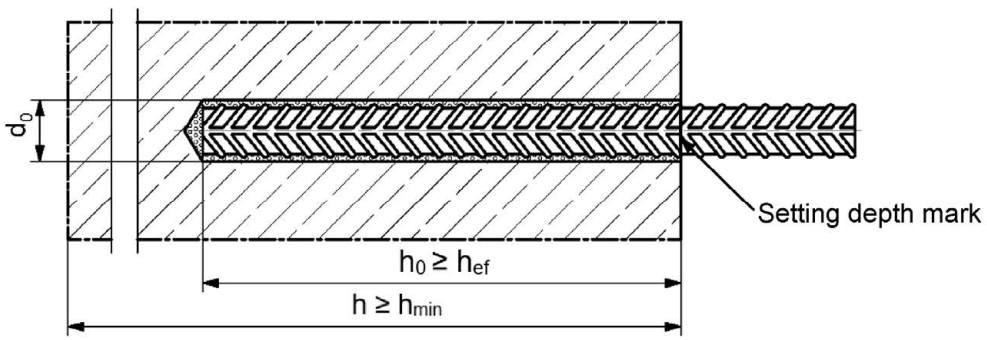


Figures not to scale

**Table B8.1:** Installation parameters for **fischer rebar anchor FRA**

| Rebar anchor FRA | | Thread | M12[1)] | | M16 | M20 | M24 |
|---|---|---|---|---|---|---|---|
| Nominal diameter of the bar | $\phi$ | [mm] | 12 | | 16 | 20 | 25 |
| Nominal drill hole diameter | $d_0$ | | 14 | 16 | 20 | 25 | 30 |
| Drill hole depth | $h_0$ | | $h_{ef} + l_e$ | | | | |
| Effective embedment depth | $h_{ef,min}$ | | 70 | | 80 | 90 | 96 |
| | $h_{ef,max}$ | | 140 | | 220 | 300 | 380 |
| Distance concrete surface to welded joint | $l_e$ | | 100 | | | | |
| Minimum spacing and minimum edge distance | $s_{min}$ = $c_{min}$ | | 55 | | 65 | 85 | 105 |
| Diameter of clearance hole in the fixture – pre-positioned anchorage | $\leq d_f$ | | 14 | | 18 | 22 | 26 |
| Diameter of clearance hole in the fixture – push through anchorage | $\leq d_f$ | | 18 | | 22 | 26 | 32 |
| Minimum thickness of concrete member | $h_{min}$ | | $h_0 + 30$ ($\geq 100$) | $h_0 + 2d_0$ | | | |
| Maximum installation torque | max $T_{inst}$ | [Nm] | 40 | | 60 | 120 | 150 |

[1)] Both drill hole diameters can be used

**fischer rebar anchor FRA**

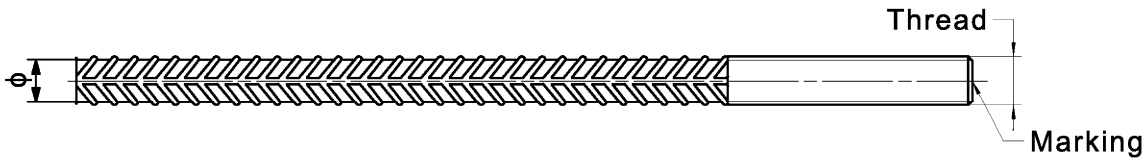


Marking frontal e. g: FRA (for stainless steel);
FRA HCR (for high corrosion resistant steel)

**Installation conditions:**

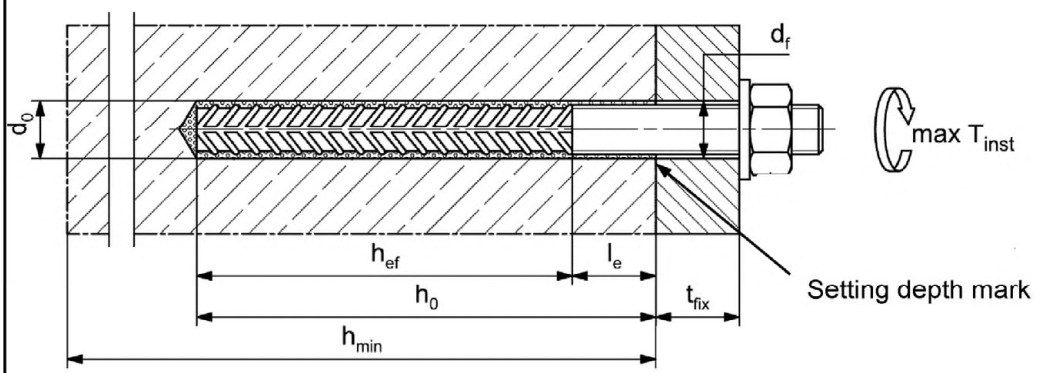


Figures not to scale

fischer Superbond

**Intended use**
Installation parameters rebar anchor FRA

**Annex B 8**

**Table B9.1:** Dimension of **resin capsule RSB**

| **Resin capsule RSB** | | | **RSB 8** | **RSB 10 mini** | **RSB 10** | **RSB 12 mini** | **RSB 12** | **RSB 16 mini** | **RSB 16** | **RSB 16 E** | **RSB 20** | **RSB 20 E / 24** | **RSB 30** |
|---|---|---|---|---|---|---|---|---|---|---|---|---|---|
| Capsule diameter | $d_P$ | [mm] | 9,0 | 10,5 | | 12,5 | | 16,5 | | | 23,0 | | 27,5 |
| Capsule length | $L_P$ | [mm] | 85 | 72 | 90 | 72 | 97 | 72 | 95 | 123 | 160 | 190 | 260 |

**Table B9.2:** Assignment of **resin capsule RSB** to **fischer anchor rod RG M**

| **Anchor rod RG M** | | | **M8** | **M10** | **M12** | **M16** | **M20** | **M24** | **M30** |
|---|---|---|---|---|---|---|---|---|---|
| Effective embedment depth | $h_{ef,1}$ | [mm] | --- | 75 | 75 | 95 | --- | --- | --- |
| Related capsule RSB | | [-] | --- | 10 mini | 12 mini | 16 mini | --- | --- | --- |
| Effective embedment depth | $h_{ef,2}$ | [mm] | 80 | 90 | 110 | 125 | 170 | 210 | 280 |
| Related capsule RSB | | [-] | 8 | 10 | 12 | 16 | 20 | 20 E/ 24 | 30 |
| Effective embedment depth | $h_{ef,3}$ | [mm] | --- | 150 | 150 | 190 | 210 | --- | --- |
| Related capsule RSB | | [-] | --- | 2 x 10 mini | 2 x 12 mini | 2 x 16 mini | 20 E / 24 | --- | --- |

**Table B9.3:** Assignment of **resin capsule RSB** to **fischer internal threaded anchor RG M I**

| **Internal threaded anchor RG M I** | | | **M8** | **M10** | **M12** | **M16** | **M20** |
|---|---|---|---|---|---|---|---|
| Effective embedment depth | $h_{ef}$ | [mm] | 90 | 90 | 125 | 160 | 200 |
| Related capsule RSB | | [-] | 10 | 12 | 16 | 16 E | 20 E / 24 |

**Table B10.1:** Combined setting methods for **resin capsule RSB** with **fischer anchor rod RG M**

| **Anchor rod RG M** | Minimum temperature at anchoring base [°C] | Minimum temperature of the resin capsule [°C] | **M8** | **M10** | **M12** | **M16** | **M20** | **M24** | **M30** |
|---|---|---|---|---|---|---|---|---|---|
| Rotary hammer | -30 | -15 | ✓ | ✓ | ✓ | ✓ | ✓ | ✓ | ✓ |
| Tangential impact screw driver | -10 | -10 | - | ✓ | ✓ | ✓ | - | - | - |
| Cordless drill screw driver | -10 | 5 | ✓ | ✓ | ✓ | ✓ | - | - | - |

**Table B10.2:** Combined setting methods for **resin capsule RSB** with **fischer internal threaded anchor RG M I**

| **fischer internal threaded anchor RG M I** | Minimum temperature at anchoring base [°C] | Minimum temperature of the resin capsule [°C] | **M8** | **M10** | **M12** | **M16** | **M20** |
|---|---|---|---|---|---|---|---|
| Rotary hammer | -30 | -15 | ✓ | ✓ | ✓ | ✓ | ✓ |
| Tangential impact screw driver | -10 | -10 | ✓ | ✓ | ✓ | - | - |
| Cordless drill screw driver | -10 | 5 | ✓ | ✓ | ✓ | - | - |

**Table B11.1:** Parameters of the cleaning brush BS (steel brush with steel bristles)

The size of the cleaning brush refers to the drill hole diameter

| | | | | | | | | | | | | | | | |
|---|---|---|---|---|---|---|---|---|---|---|---|---|---|---|---|
| Nominal drill hole diameter | $d_0$ | [mm] | 10 | 12 | 14 | 16 | 18 | 20 | 24 | 25 | 28 | 30 | 32 | 35 | 40 |
| Steel brush diameter BS | $d_b$ | | 11 | 14 | 16 | 20 | | 25 | 26 | 27 | 30 | 40 | | | - |
| Steel brush diameter BSB | $d_b$ | | - | - | - | - | | - | - | - | - | - | | | 42 |

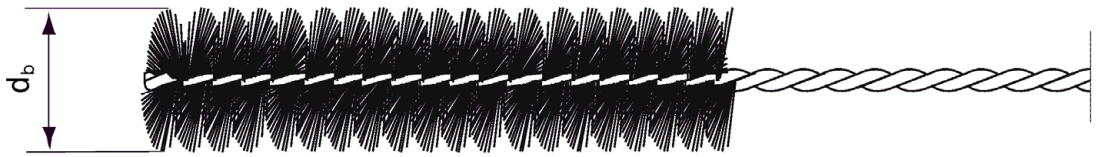


**Table B11.2:** Conditions for use **static mixer** without an **extension tube**

| | | | | | | | | | | | | | | |
|---|---|---|---|---|---|---|---|---|---|---|---|---|---|---|
| Nominal drill hole diameter | $d_0$ | [mm] | 10 | 12 | 14 | 16 | 18 | 20 | 24 | 25 | 28 | 30 | 35 | 40 |
| Drill hole depth $h_0$ by using | FIS MR Plus | | ≤ 90 | | ≤ 120 | ≤ 140 | ≤ 150 | ≤ 160 | ≤ 190 | ≤ 210 | | | | |
| | FIS UMR | | - | - | ≤ 90 | ≤ 160 | ≤ 180 | ≤ 190 | ≤ 220 | | ≤ 250 | | | |

**Table B11.3:** Maximum **processing time** of the mortar and minimum **curing time** (During the curing time of the mortar the concrete temperature may not fall below the listed minimum temperature. Minimal cartridge temperature +5 °C; minimal resin capsule temperature -15 °C)

| Temperature at anchoring base [°C] | Maximum processing time $t_{work}$ | | Minimum curing time $t_{cure}$ | | |
|---|---|---|---|---|---|
| | FIS SB | FIS SB High Speed | FIS SB | FIS SB High Speed | RSB |
| -30 to -20 | --- | --- | --- | --- | 120 h |
| > -20 to -15 | --- | 60 min | --- | 24 h | 48 h |
| > -15 to -10 | 60 min | 30 min | 36 h | 8 h | 30 h |
| > -10 to -5 | 30 min | 15 min | 24 h | 3 h | 16 h |
| > -5 to 0 | 20 min | 10 min | 8 h | 2 h | 10 h |
| > 0 to 5 | 13 min | 5 min | 4 h | 1 h | 45 min |
| > 5 to 10 | 9 min | 3 min | 2 h | 45 min | 30 min |
| > 10 to 20 | 5 min | 2 min | 1 h | 30 min | 20 min |
| > 20 to 30 | 4 min | 1 min | 45 min | 15 min | 5 min |
| > 30 to 40 | 2 min | --- | 30 min | --- | 3 min |

Figures not to scale

## Installation instructions part 1; Injection mortar system FIS SB

### Drilling and cleaning the hole (hammer drilling with standard drill bit)

| | | |
|---|---|---|
| 1 | 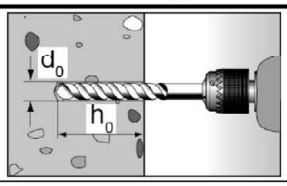 | Drill the hole.<br>Nominal drill hole diameter $\mathbf{d_0}$ and drill hole depth $\mathbf{h_0}$<br>see **Tables B4.1, B6.1, B7.1, B8.1**. |
| 2 | 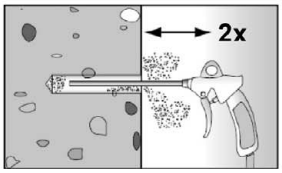 | Clean the drill hole:<br>Blow out the drill hole twice, with oil free compressed air (p ≥ 6 bar)<br>In uncracked concrete the use of the manual blow-out pump ABG is possible<br>(Installation parameters:<br>$d_0$ < 18 mm and $h_{ef}$ < 10d)<br> |
| 3 | 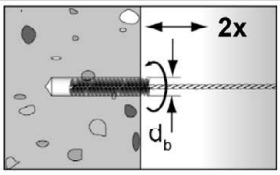 | Brush the drill hole twice. For drill hole diameter ≥ 30 mm use a power drill.<br>For deep holes use an extension. Corresponding brushes see **Table B11.1**. |
| 4 | 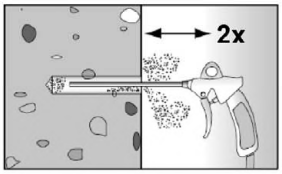 | Clean the drill hole:<br>Blow out the drill hole twice, with oil free compressed air (p ≥ 6 bar)<br>In uncracked concrete the use of the manual blow-out pump ABG is possible<br>(Installation parameters:<br>$d_0$ < 18 mm and $h_{ef}$ < 10d)<br> |

Go to step 5 (Annex B 12)

### Drilling and cleaning the hole (hammer drilling with hollow drill bit)

| | | |
|---|---|---|
| 1 | 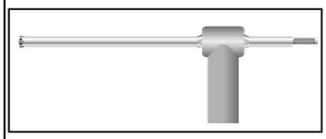 | Check a suitable hollow drill (see **Table B1.1**) for correct operation of the dust extraction. |
| 2 | 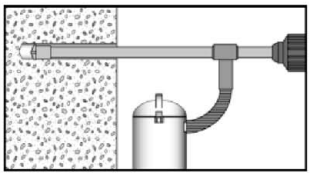 | Use a suitable dust extraction system, e. g. fischer FVC 35 M or a comparable dust extraction system with equivalent performance data.<br><br>Drill the hole with hollow drill bit. The dust extraction system has to extract the drill dust nonstop during the drilling process and must be adjusted to maximum power. Nominal drill hole diameter $\mathbf{d_0}$ and drill hole depth $\mathbf{h_0}$<br>see **Tables B4.1, B6.1, B7.1, B8.1**. |

Go to step 5 (Annex B 12)

## Installation instructions part 2; injection mortar system FIS SB

### Preparing the cartridge

| | | | |
|---|---|---|---|
| **5** | 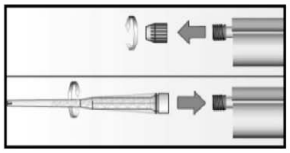 | | Remove the sealing cap<br>Screw on the static mixer<br>(the spiral in the static mixer must be clearly visible). |
| **6** | 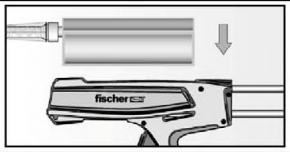 | 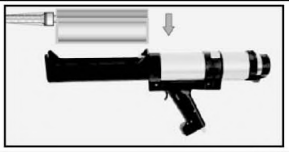 | Place the cartridge into the dispenser. |
| **7** | 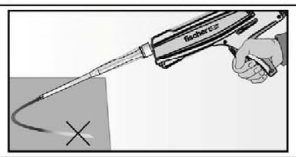 | 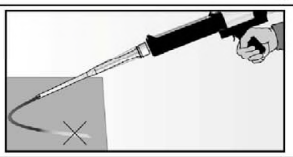 | Extrude approximately 10 cm of material out until the resin is evenly grey in colour. Do not use mortar that is not uniformly grey. |

### Injection of the mortar

| | | | |
|---|---|---|---|
| **8** | 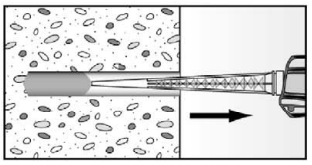 <br>For $h_0 = h_{ef}$ fill approximately 2/3 of the drill hole with mortar. For $h_0 > h_{ef}$ more mortar is needed. Always begin from the bottom of the hole and avoid bubbles. | 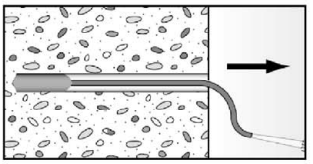 <br>The conditions for mortar injection without extension tube can be found in **Table B11.2.**<br>For deeper drill holes, than those mentioned in **Table B11.2,** use a suitable extension tube. | 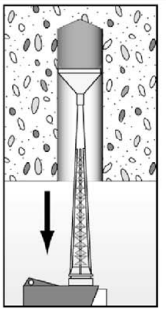 <br>For overhead installation, deep holes ($h_0$ > 250 mm) or drill hole diameter ($d_0$ ≥ 30 mm) use an injection-adapter. |

Go to step 9 (Annex B 13)

## Installation instructions part 3; injection mortar system FIS SB

### Installation of anchor rods or fischer internal threaded anchors RG M I

| | | | | |
|---|---|---|---|---|
| **9** | 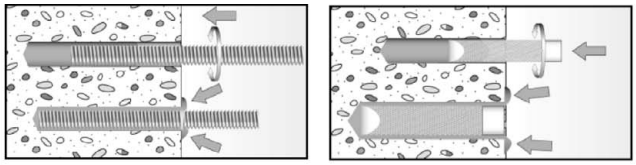 | Only use clean and oil-free metal part. Mark the setting depth of the metal part. Push the anchor rod or fischer internal threaded RG M I anchor down to the bottom of the hole, turning it slightly while doing so. After inserting the metal part, excess mortar must be emerged around the anchor element. If not, pull out the metal part immediately and reinject mortar. | | |
| 9a | 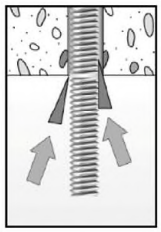 | For overhead installations support the metal part with wedges. (e. g. fischer centering wedges). | 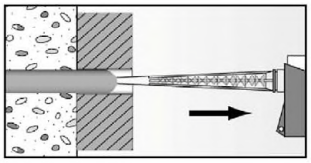 | For push through installation fill the annular gap with mortar. |
| **10** | | Wait for the specified curing time $t_{cure}$ see **Table B11.3**. | **11** | 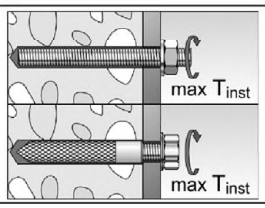  Mounting the fixture max $T_{inst}$ see **Tables B4.1** and **B6.1**. |
| **Option** | 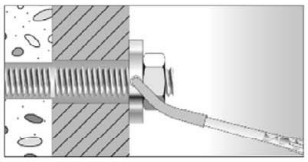 | After the minimum curing time is reached, the gap between metal part and fixture (annular clearance) may be filled with mortar via the fischer filling disc. Compressive strength ≥ 50 N/mm² (e.g. fischer injection mortars FIS HB, FIS SB, FIS V, FIS EM Plus). ATTENTION: Using fischer filling disc reduces $t_{fix}$ (usable length of the anchor). | | |

### Installation reinforcing bars and fischer rebar anchor FRA

| | | | | |
|---|---|---|---|---|
| **9** | 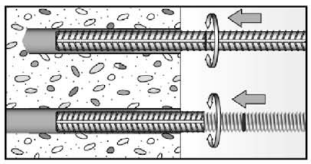 | Only use clean and oil-free reinforcing bars or fischer FRA. Mark the setting depth. Turn while using force to push the reinforcement bar or the fischer FRA into the filled hole up to the setting depth mark. | | |
| | 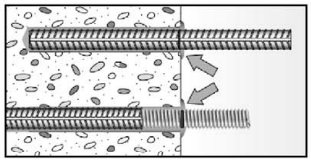 | When the setting depth mark is reached, excess mortar must be emerged from the mouth of the drill hole. If not, pull out the anchor element immediately and reinject mortar. | | |
| **10** | | Wait for the specified curing time $t_{cure}$ see **Table B11.3**. | **11** | 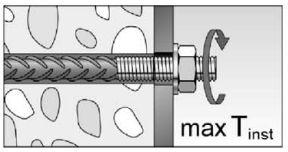  Mounting the fixture max $T_{inst}$ see **Table B8.1**. |

## Installation instructions part 4; resin capsule RSB

### Drilling and cleaning the hole (hammer drilling with standard drill bit)

| | | |
|---|---|---|
| 1 | 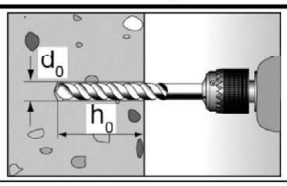 | Drill the hole.<br>Nominal drill hole diameter $\mathbf{d_0}$ and drill hole depth $\mathbf{h_0}$<br>see **Tables B5.1** and **B6.1** |
| 2 | 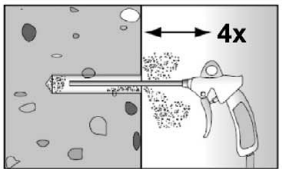 | Clean the drill hole:<br>Blow out the drill hole four times, with oil free compressed air (p ≥ 6 bar)<br>In uncracked concrete the use of the manual blow-out pump ABG is possible (Installation parameters:<br>$d_0$ < 18 mm and $h_{ef}$ < 10d)<br> |

Go to step 6 (Annex B 16)

### Drilling and cleaning the hole (wet drilling with diamond drill bit)

| | | | |
|---|---|---|---|
| 1 | 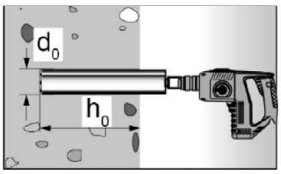 | Drill the hole.<br>Drill hole diameter $\mathbf{d_0}$ and drill hole depth $\mathbf{h_0}$<br>see **Tables B5.1** and **B6.1**. | 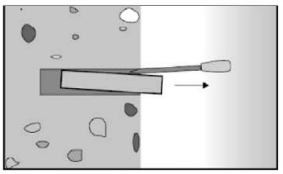 Break the drill core and remove it. |
| 2 | 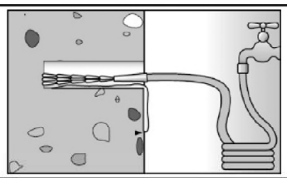 | Flush the drill hole with clean water until it flows clear. | |
| 3 | 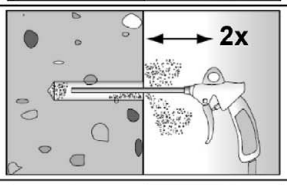 | Blow out the drill hole twice, using oil-free compressed air (p > 6 bar). | |
| 4 | 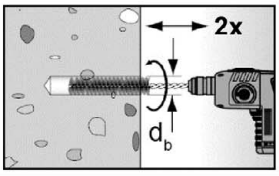 | Brush the drill hole twice using a power drill. Corresponding brushes see **Table B11.1**. | |
| 5 | 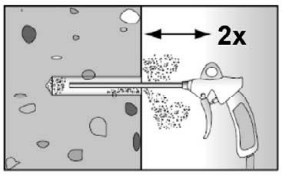 | Blow out the drill hole twice, using oil-free compressed air (p > 6 bar). | |

Go to step 6 (Annex B 16)

## Installation instructions part 5; resin capsule RSB

Drilling and cleaning the hole (hammer drilling with hollow drill bit)

| | | |
|---|---|---|
| 1 | 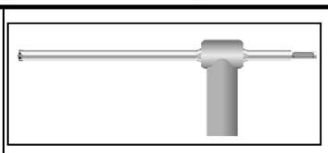 | Check a suitable hollow drill (see **Table B2.1**) for correct operation of the dust extraction. |
| 2 | 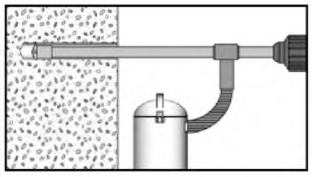 | Use a suitable dust extraction system, e. g. fischer FVC 35 M or a comparable dust extraction system with equivalent performance data. Drill the hole with hollow drill bit. The dust extraction system has to extract the drill dust nonstop during the drilling process and must be adjusted to maximum power. Nominal drill hole diameter $d_0$ and drill hole depth $h_0$ see **Tables B5.1** and **B6.1**. |

Go to step 6 (Annex B 16)

Installation fischer anchor rod RG M or fischer internal threaded anchor RG M I

| | | |
|---|---|---|
| 6 | 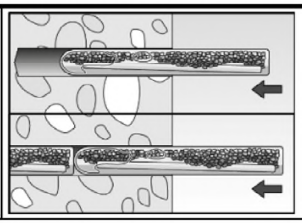 | Insert the resin capsule into the drill hole by hand. Suitable resin capsule RSB or RSB mini see **Table B9.2**. |

Installation with rotary hammer

| | | | |
|---|---|---|---|
| 7a | 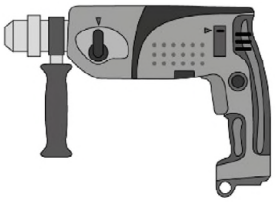 | 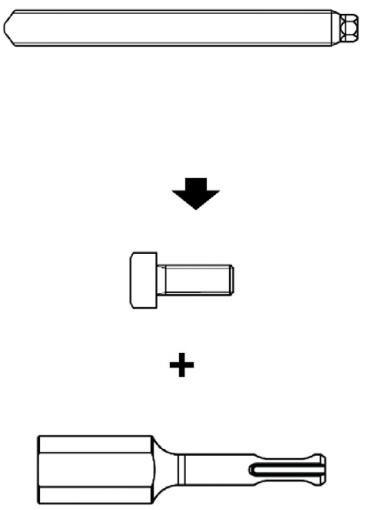  SK SW 8 ½" VK (M8-M22) | 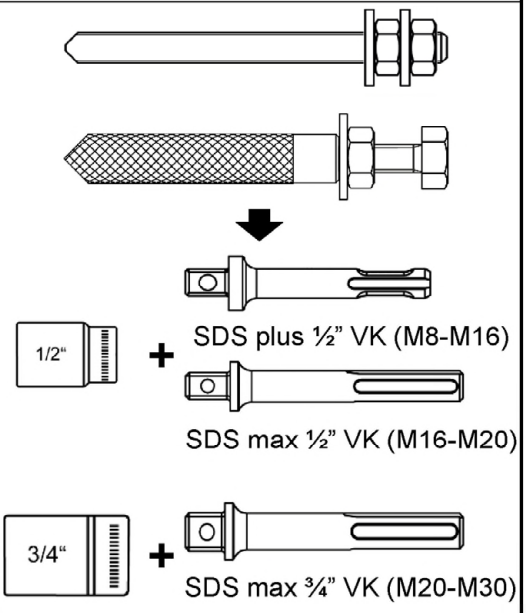  |
| | 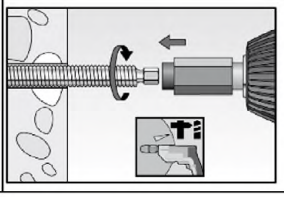 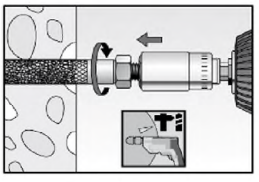 | Only use clean and grease-free metal parts. Using a suitable adapter, drive the fischer anchor rod RG M or the fischer internal threaded anchor RG M I into the capsule using a rotary hammer on rotary hammer mode. Stop when the metal parts reaches the bottom of the hole and is set to the correct embedment depth. | |

## Installation instructions part 6; resin capsule RSB
Installation fischer anchor rod RG M or fischer internal threaded anchor RG M I (continue)

Installation with cordless drill or tangential impact screwdriver (Specification according to step 7c)

**7b**

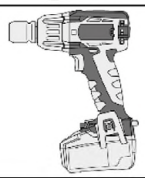

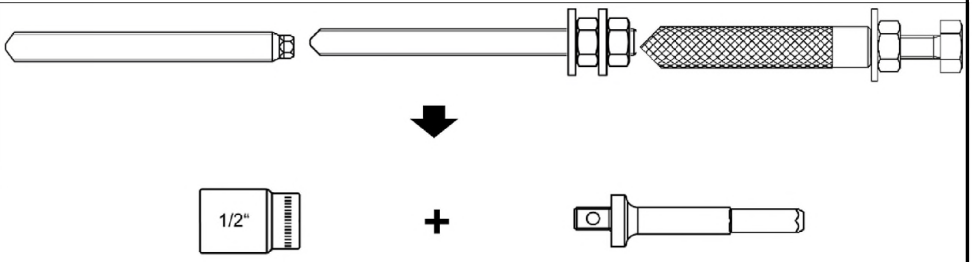


Anchor rod RG M: SK SW 8 ½" VK (M8-M16)
Internal threaded anchor RG M I: SK SW 8 ½" VK (M8-M12)

**7c**

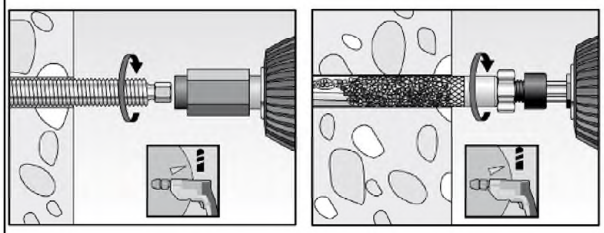

Only use clean and grease-free metal parts. Using a suitable adapter, drive the fischer anchor rod RG M or the fischer internal threaded anchor RG M I into the capsule using a cordless drill screwdriver (only drilling operation, torque = 0 - 32 Nm and idle speed = 0 - 450 revolutions per minute, e.g., FEIN ASB 18, 1st gear or equivalent power tool) or tangential impact screw driver (torque = 0 - 400 Nm and idle speed = 0-2.150 revolutions per minute; e.g. fischer FSS 18V 400BL, torque setting 12 or equivalent power tool).
Stop when the metal parts reaches the bottom of the hole and is set to the correct embedment depth.

**8**

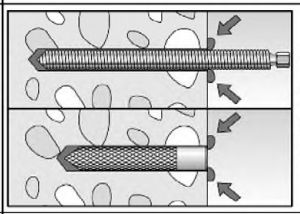

When reaching the correct embedment depth, excess mortar must emerge from the mouth of the drill hole. If not, the metal parts must be pulled out directly and a second resin capsule must be pushed into the drill hole. Setting process must be repeated (Step 7).

**9**

Wait for the specified curing time, $t_{cure}$ see **Table B11.3**.

**10**

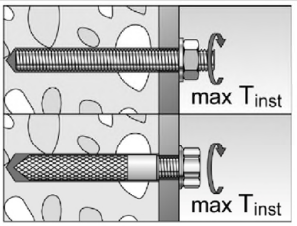


Mounting the fixture max $T_{inst}$ see **Tables B5.1** and **B6.1**.

**Table C1.1:** Characteristic resistance to **steel failure** under tension / shear loading of **fischer anchor rods** and **standard threaded rods**

| Anchor rod / standard threaded rod | | | | M8 | M10 | M12 | M16 | M20 | M24 | M27 | M30 |
|---|---|---|---|---|---|---|---|---|---|---|---|
| **Characteristic resistance to steel failure under tension loading** [3] | | | | | | | | | | | |
| Characteristic resistance $N_{Rk,s}$ | Steel zinc plated | Property class | 4.8 | [kN] | 15(13) | 23(21) | 33 | 63 | 98 | 141 | 184 | 224 |
| | | | 5.8 | | 19(17) | 29(27) | 43 | 79 | 123 | 177 | 230 | 281 |
| | | | 8.8 | | 29(27) | 47(43) | 68 | 126 | 196 | 282 | 368 | 449 |
| | Stainless steel R and high corrosion resistant steel HCR | | 50 | | 19 | 29 | 43 | 79 | 123 | 177 | 230 | 281 |
| | | | 70 | | 26 | 41 | 59 | 110 | 172 | 247 | 322 | 393 |
| | | | 80 | | 30 | 47 | 68 | 126 | 196 | 282 | 368 | 449 |
| **Partial factors** [1] | | | | | | | | | | | |
| Partial factor $\gamma_{Ms,N}$ | Steel zinc plated | Property class | 4.8 | [-] | 1,50 | | | | | | |
| | | | 5.8 | | 1,50 | | | | | | |
| | | | 8.8 | | 1,50 | | | | | | |
| | Stainless steel R and high corrosion resistant steel HCR | | 50 | | 2,86 | | | | | | |
| | | | 70 | | 1,87 / fischer HCR: 1,50 | | | | | | |
| | | | 80 | | 1,60 | | | | | | |
| **Characteristic resistance to steel failure under shear loading** [3] | | | | | | | | | | | |
| **without lever arm** | | | | | | | | | | | |
| Characteristic resistance $V^0_{Rk,s}$ | Steel zinc plated | Property class | 4.8 | [kN] | 9(8) | 14(13) | 20 | 38 | 59 | 85 | 110 | 135 |
| | | | 5.8 | | 11(10) | 17(16) | 25 | 47 | 74 | 106 | 138 | 168 |
| | | | 8.8 | | 15(13) | 23(21) | 34 | 63 | 98 | 141 | 184 | 225 |
| | Stainless steel R and high corrosion resistant steel HCR | | 50 | | 9 | 15 | 21 | 39 | 61 | 89 | 115 | 141 |
| | | | 70 | | 13 | 20 | 30 | 55 | 86 | 124 | 161 | 197 |
| | | | 80 | | 15 | 23 | 34 | 63 | 98 | 141 | 184 | 225 |
| Ductility factor | | | $k_7$ | [-] | 1,0 | | | | | | |
| **with lever arm** | | | | | | | | | | | |
| Characteristic resistance $M^0_{Rk,s}$ | Steel zinc plated | Property class | 4.8 | [Nm] | 15(13) | 30(27) | 52 | 133 | 259 | 448 | 665 | 899 |
| | | | 5.8 | | 19(16) | 37(33) | 65 | 166 | 324 | 560 | 833 | 1123 |
| | | | 8.8 | | 30(26) | 60(53) | 105 | 266 | 519 | 896 | 1333 | 1797 |
| | Stainless steel R and high corrosion resistant steel HCR | | 50 | | 19 | 37 | 65 | 166 | 324 | 560 | 833 | 1123 |
| | | | 70 | | 26 | 52 | 92 | 232 | 454 | 784 | 1167 | 1573 |
| | | | 80 | | 30 | 60 | 105 | 266 | 519 | 896 | 1333 | 1797 |
| **Partial factors** [1] | | | | | | | | | | | |
| Partial factor $\gamma_{Ms,V}$ | Steel zinc plated | Property class | 4.8 | [-] | 1.25 | | | | | | |
| | | | 5.8 | | 1.25 | | | | | | |
| | | | 8.8 | | 1.25 | | | | | | |
| | Stainless steel R and high corrosion resistant steel HCR | | 50 | | 2.38 | | | | | | |
| | | | 70 | | 1.56 / fischer HCR: 1.25[2] | | | | | | |
| | | | 80 | | 1.33 | | | | | | |

[1] In absence of other national regulations
[2] Only admissible for high corrosion resistant steel C, with $f_{yk} / f_{uk} \geq 0{,}8$ and $A_5 > 12$ % (e.g. fischer anchor rods)
[3] Values in brackets are valid for undersized threaded rods with smaller stress area $A_s$ for hotdip galvanized standard threaded rods according to EN ISO 10684:2004+AC:2009

**Table C2.1:** Characteristic resistance to **steel failure** under tension / shear loading of **fischer internal threaded anchors RG M I**

| fischer internal threaded anchors RG M I | | | | | M8 | M10 | M12 | M16 | M20 |
|---|---|---|---|---|---|---|---|---|---|
| **Characteristic resistance to steel failure under tension loading** | | | | | | | | | |
| Charact. resistance with screw | $N_{Rk,s}$ | Property class | 5.8 | [kN] | 19 | 29 | 43 | 79 | 123 |
| | | | 8.8 | | 29 | 47 | 68 | 108 | 179 |
| | | Property class 70 | R | | 26 | 41 | 59 | 110 | 172 |
| | | | HCR | | 26 | 41 | 59 | 110 | 172 |
| **Partial factors**[1] | | | | | | | | | |
| Partial factors | $\gamma_{Ms,N}$ | Property class | 5.8 | [-] | 1,50 | | | | |
| | | | 8.8 | | 1,50 | | | | |
| | | Property class 70 | R | | 1,87 | | | | |
| | | | HCR | | 1,87 | | | | |
| **Characteristic resistance to steel failure under shear loading** | | | | | | | | | |
| **Without lever arm** | | | | | | | | | |
| Charact. resistance with screw | $V^0_{Rk,s}$ | Property class | 5.8 | [kN] | 9,2 | 14,5 | 21,1 | 39,2 | 62,0 |
| | | | 8.8 | | 14,6 | 23,2 | 33,7 | 54,0 | 90,0 |
| | | Property class 70 | R | | 12,8 | 20,3 | 29,5 | 54,8 | 86,0 |
| | | | HCR | | 12,8 | 20,3 | 29,5 | 54,8 | 86,0 |
| Ductility factor | | | $k_7$ | [-] | 1,0 | | | | |
| **With lever arm** | | | | | | | | | |
| Charact. resistance with screw | $M^0_{Rk,s}$ | Property class | 5.8 | [Nm] | 20 | 39 | 68 | 173 | 337 |
| | | | 8.8 | | 30 | 60 | 105 | 266 | 519 |
| | | Property class 70 | R | | 26 | 52 | 92 | 232 | 454 |
| | | | HCR | | 26 | 52 | 92 | 232 | 454 |
| **Partial factors**[1] | | | | | | | | | |
| Partial factors | $\gamma_{Ms,V}$ | Property class | 5.8 | [-] | 1,25 | | | | |
| | | | 8.8 | | 1,25 | | | | |
| | | Property class 70 | R | | 1,56 | | | | |
| | | | HCR | | 1,56 | | | | |

[1] In absence of other national regulations

**Table C3.1:** Characteristic resistance to **steel failure** under tension and shear loading of **reinforcing bars**

| **Nominal diameter of the bar** | | **ϕ** | **8** | **10** | **12** | **14** | **16** | **20** | **25** | **28** | **32** |
|---|---|---|---|---|---|---|---|---|---|---|---|
| **Characteristic resistance to steel failure under tension loading** | | | | | | | | | | | |
| Characteristic resistance | $N_{Rk,s}$ | [kN] | $A_s \cdot f_{uk}$ 2) | | | | | | | | |
| **Characteristic resistance to steel failure under shear loading** | | | | | | | | | | | |
| **Without lever arm** | | | | | | | | | | | |
| Characteristic resistance | $V^0_{Rk,s}$ | [kN] | $k_6$ 1) $\cdot A_s \cdot f_{uk}$ 2) | | | | | | | | |
| Ductility factor | $k_7$ | [-] | 1,0 | | | | | | | | |
| **With lever arm** | | | | | | | | | | | |
| Characteristic resistance | $M^0_{Rk,s}$ | [Nm] | $1{,}2 \cdot W_{el} \cdot f_{uk}$ 2) | | | | | | | | |

1) In accordance with EN 1992-4:2018 section 7.2.2.3.1
$k_6$ = 0,6 for fasteners made of carbon steel with $f_{uk} \leq 500$ N/mm²
= 0,5 for fasteners made of carbon steel with $500 < f_{uk} \leq 1000$ N/mm²
= 0,5 for fasteners made of stainless steel

2) $f_{uk}$ respectively shall be taken from the specifications of the rebar.

**Table C3.2:** Characteristic resistance to **steel failure** under tension and shear loading of **fischer rebar anchors FRA**

| **fischer rebar anchor FRA** | | | **M12** | **M16** | **M20** | **M24** |
|---|---|---|---|---|---|---|
| **Characteristic resistance to steel failure under tension loading** | | | | | | |
| Characteristic resistance | $N_{Rk,s}$ | [kN] | 62,1 | 110,5 | 172,7 | 263,0 |
| **Partial factor** 1) | | | | | | |
| Partial factor | $\gamma_{Ms,N}$ | [-] | 1,4 | | | |
| **Characteristic resistance to steel failure under shear loading** | | | | | | |
| **Without lever arm** | | | | | | |
| Characteristic resistance | $V^0_{Rk,s}$ | [kN] | 33,7 | 62,8 | 98,0 | 141,2 |
| Ductility factor | $k_7$ | [-] | 1,0 | | | |
| **With lever arm** | | | | | | |
| Characteristic resistance | $M^0_{Rk,s}$ | [Nm] | 104,8 | 266,3 | 519,2 | 898,0 |
| **Partial factor** 1) | | | | | | |
| Partial factor | $\gamma_{Ms,V}$ | [-] | 1,25 | | | |

1) In absence of other national regulations

**Table C4.1:** Characteristic resistance to **concrete failure** under tension / shear loading

| **Size** | | | | **All sizes** | | | | | | | |
|---|---|---|---|---|---|---|---|---|---|---|---|
| **Tension loading** | | | | | | | | | | | |
| Installation factor | | $\gamma_{inst}$ | [-] | See annex C 5 to C 10 and C 15 to C16 | | | | | | | |
| **Factors for the compressive strength of concrete > C20/25** | | | | | | | | | | | |
| Increasing factor $\psi_c$ for cracked or uncracked concrete $\tau_{Rk(X,Y)} = \psi_c \cdot \tau_{Rk(C20/25)}$ | C25/30 | $\Psi_c$ | [-] | 1,02 | | | | | | | |
| | C30/37 | | | 1,04 | | | | | | | |
| | C35/45 | | | 1,07 | | | | | | | |
| | C40/50 | | | 1,08 | | | | | | | |
| | C45/55 | | | 1,09 | | | | | | | |
| | C50/60 | | | 1,10 | | | | | | | |
| **Splitting failure** | | | | | | | | | | | |
| Edge distance | $h / h_{ef} \geq 2{,}0$ | $c_{cr,sp}$ | [mm] | $1{,}0\ h_{ef}$ | | | | | | | |
| | $2{,}0 > h / h_{ef} > 1{,}3$ | | | $4{,}6\ h_{ef} - 1{,}8\ h$ | | | | | | | |
| | $h / h_{ef} \leq 1{,}3$ | | | $2{,}26\ h_{ef}$ | | | | | | | |
| Spacing | | $s_{cr,sp}$ | | $2\ c_{cr,sp}$ | | | | | | | |
| **Concrete cone failure** | | | | | | | | | | | |
| Uncracked concrete | | $k_{ucr,N}$ | [-] | 11,0 | | | | | | | |
| Cracked concrete | | $k_{cr,N}$ | | 7,7 | | | | | | | |
| Edge distance | | $c_{cr,N}$ | [mm] | $1{,}5\ h_{ef}$ | | | | | | | |
| Spacing | | $s_{cr,N}$ | | $2\ c_{cr,N}$ | | | | | | | |
| **Factors for sustained tension loading** | | | | | | | | | | | |
| Temperature range | | | [-] | 24 °C / 40 °C | 50 °C / 80 °C | 72 °C / 120 °C | 90 °C / 150 °C | | | | |
| Factor | | $\Psi^0_{sus}$ | [-] | 0,84 | 0,86 | 0,84 | 0,91 | | | | |
| **Shear loading** | | | | | | | | | | | |
| Installation factor | | $\gamma_{inst}$ | [-] | 1,0 | | | | | | | |
| **Concrete pry-out failure** | | | | | | | | | | | |
| Factor for pry-out failure | | $k_8$ | [-] | 2,0 | | | | | | | |
| **Concrete edge failure** | | | | | | | | | | | |
| Effective length of fastener in shear loading | | $l_f$ | [mm] | for $d_{nom} \leq 24$ mm: min ($h_{ef}$; 12 $d_{nom}$)<br>for $d_{nom} > 24$ mm: min ($h_{ef}$; 8 $d_{nom}$; 300 mm) | | | | | | | |
| **Calculation diameters** | | | | | | | | | | | |
| Size | | | | M8 | M10 | M12 | M16 | M20 | M24 | M27 | M30 |
| fischer anchor rods and standard threaded rods | | $d_{nom}$ | [mm] | 8 | 10 | 12 | 16 | 20 | 24 | 27 | 30 |
| fischer internal threaded anchors RG M I | | $d_{nom}$ | | 12 | 16 | 18 | 22 | 28 | -[1] | -[1] | -[1] |
| fischer rebar anchor FRA | | $d_{nom}$ | | -[1] | -[1] | 12 | 16 | 20 | 25 | -[1] | -[1] |
| Size (nominal diameter of the bar) | | | $\phi$ | 8 | 10 | 12 | 14 | 16 | 20 | 25 | 28 | 32 |
| Reinforcing bar | | $d_{nom}$ | [mm] | 8 | 10 | 12 | 14 | 16 | 20 | 25 | 28 | 32 |

[1] Anchor type not part of the ETA

**Table C5.1:** Characteristic resistance to **combined pull-out** and **concrete failure** for **fischer anchor rods** and **standard threaded rods** in hammer drilled holes in combination with **injection mortar FIS SB**; **uncracked or cracked concrete**

| **Anchor rod / standard threaded rod** | | | | **M8** | **M10** | **M12** | **M16** | **M20** | **M24** | **M27** | **M30** |
|---|---|---|---|---|---|---|---|---|---|---|---|
| **Combined pullout and concrete cone failure** | | | | | | | | | | | |
| Thread diameter | | d | [mm] | 8 | 10 | 12 | 16 | 20 | 24 | 27 | 30 |
| **Uncracked concrete** | | | | | | | | | | | |
| **Characteristic bond resistance in uncracked concrete C20/25** | | | | | | | | | | | |
| Hammer-drilling with standard drill bit or hollow drill bit (dry or wet concrete) | | | | | | | | | | | |
| Temperature range | I: 24 °C / 40 °C | $\tau_{Rk,ucr}$ | [N/mm²] | 12 | 13 | 13 | 13 | 13 | 12 | 10 | 10 |
| | II: 50 °C / 80 °C | | | 12 | 12 | 12 | 13 | 13 | 12 | 10 | 10 |
| | III: 72 °C / 120 °C | | | 10 | 11 | 11 | 11 | 11 | 11 | 9,0 | 9,0 |
| | IV: 90 °C / 150 °C | | | 10 | 10 | 10 | 11 | 10 | 10 | 8,0 | 8,0 |
| **Installation factors** | | | | | | | | | | | |
| Dry or wet concrete | | $\gamma_{inst}$ | [-] | 1,0 | | | | | | | |
| **Cracked concrete** | | | | | | | | | | | |
| **Characteristic bond resistance in cracked concrete C20/25** | | | | | | | | | | | |
| Hammer-drilling with standard drill bit or hollow drill bit (dry or wet concrete) | | | | | | | | | | | |
| Temperature range | I: 24 °C / 40 °C | $\tau_{Rk,cr}$ | [N/mm²] | 6,5 | 7,0 | 7,5 | 7,5 | 7,5 | 7,5 | 7,5 | 7,5 |
| | II: 50 °C / 80 °C | | | 6,0 | 6,5 | 7,5 | 7,5 | 7,5 | 7,5 | 7,0 | 7,0 |
| | III: 72 °C / 120 °C | | | 5,5 | 6,0 | 6,5 | 6,5 | 6,5 | 6,5 | 6,0 | 6,0 |
| | IV: 90 °C / 150 °C | | | 5,0 | 5,5 | 6,0 | 6,0 | 6,0 | 6,0 | 5,5 | 5,5 |
| **Installation factors** | | | | | | | | | | | |
| Dry or wet concrete | | $\gamma_{inst}$ | [-] | 1,0 | | | | | | | |

**Table C6.1:** Characteristic resistance to **combined pull-out** and concrete failure for **fischer anchor rods RG M** in hammer or diamond drilled holes in combination with **resin capsule RSB**; **uncracked or cracked concrete**

| **Anchor rod RG M** | | | | **M8** | **M10** | **M12** | **M16** | **M20** | **M24** | **M30** |
|---|---|---|---|---|---|---|---|---|---|---|
| **Combined pullout and concrete cone failure** | | | | | | | | | | |
| Thread diameter | | d | [mm] | 8 | 10 | 12 | 16 | 20 | 24 | 30 |
| **Uncracked concrete** | | | | | | | | | | |
| **Characteristic bond resistance in uncracked concrete C20/25** | | | | | | | | | | |
| Hammer-drilling with standard drill bit or hollow drill bit (dry or wet concrete as well as water filled hole) | | | | | | | | | | |
| Temperature range | I: 24 °C / 40 °C | $\tau_{Rk,ucr}$ | [N/mm²] | 12 | 13 | 13 | 13 | 13 | 12 | 10 |
| | II: 50 °C / 80 °C | | | 12 | 12 | 12 | 13 | 13 | 12 | 10 |
| | III: 72 °C / 120 °C | | | 10 | 11 | 11 | 11 | 11 | 11 | 9,0 |
| | IV: 90 °C / 150 °C | | | 10 | 10 | 10 | 11 | 10 | 10 | 8,0 |
| Diamond-drilling (dry or wet concrete as well as water filled hole) | | | | | | | | | | |
| Temperature range | I: 24 °C / 40 °C | $\tau_{Rk,ucr}$ | [N/mm²] | 13 | 13 | 14 | 14 | 14 | 13 | 11 |
| | II: 50 °C / 80 °C | | | 12 | 13 | 13 | 14 | 13 | 13 | 10 |
| | III: 72 °C / 120 °C | | | 11 | 12 | 12 | 12 | 12 | 11 | 9,5 |
| | IV: 90 °C / 150 °C | | | 10 | 11 | 11 | 11 | 11 | 10 | 8,5 |
| **Installation factors** | | | | | | | | | | |
| Dry or wet concrete | | $\gamma_{inst}$ | [-] | 1,0 | | | | | | |
| Water filled hole | | | | 1,2 | | 1,0 | | | | |
| **Cracked concrete** | | | | | | | | | | |
| **Characteristic bond resistance in cracked concrete C20/25** | | | | | | | | | | |
| Hammer-drilling with standard drill bit or hollow drill bit (dry or wet concrete as well as water filled hole) | | | | | | | | | | |
| Temperature range | I: 24 °C / 40 °C | $\tau_{Rk,cr}$ | [N/mm²] | 6,5 | 7,0 | 7,5 | 7,5 | 7,5 | 7,5 | 7,5 |
| | II: 50 °C / 80 °C | | | 6,0 | 6,5 | 7,5 | 7,5 | 7,5 | 7,5 | 7,0 |
| | III: 72 °C / 120 °C | | | 5,5 | 6,0 | 6,5 | 6,5 | 6,5 | 6,5 | 6,0 |
| | IV: 90 °C / 150 °C | | | 5,0 | 5,5 | 6,0 | 6,0 | 6,0 | 6,0 | 5,5 |
| Diamond-drilling (dry or wet concrete as well as water filled hole) | | | | | | | | | | |
| Temperature range | I: 24 °C / 40 °C | $\tau_{Rk,cr}$ | [N/mm²] | -[1)] | -[1)] | -[1)] | 7,5 | 7,5 | 7,5 | 7,5 |
| | II: 50 °C / 80 °C | | | -[1)] | -[1)] | -[1)] | 7,5 | 7,5 | 7,5 | 7,0 |
| | III: 72 °C / 120 °C | | | -[1)] | -[1)] | -[1)] | 6,5 | 6,5 | 6,5 | 6,5 |
| | IV: 90 °C / 150 °C | | | -[1)] | -[1)] | -[1)] | 6,0 | 6,0 | 6,0 | 6,0 |
| **Installation factors** | | | | | | | | | | |
| Dry or wet concrete | | $\gamma_{inst}$ | [-] | 1,0 | | | | | | |
| Water filled hole | | | | 1,2 | | 1,0 | | | | |

[1)] No performance assessed

**Table C7.1:** Characteristic resistance to **combined pull-out** and concrete failure for **fischer internal threaded anchors RG M I** in hammer drilled holes in combination with **injection mortar FIS SB**; **uncracked or cracked concrete**

| **Internal threaded anchor RG M I** | | | | **M8** | **M10** | **M12** | **M16** | **M20** |
|---|---|---|---|---|---|---|---|---|
| **Combined pullout and concrete cone failure** | | | | | | | | |
| Sleeve diameter | | d | [mm] | 12 | 16 | 18 | 22 | 28 |
| **Uncracked concrete** | | | | | | | | |
| **Characteristic bond resistance in uncracked concrete C20/25** | | | | | | | | |
| Hammer-drilling with standard drill bit or hollow drill bit (dry or wet concrete) | | | | | | | | |
| Temperature range | I: 24 °C / 40 °C | $\tau_{Rk,ucr}$ | [N/mm²] | 12 | 12 | 11 | 11 | 9,5 |
| | II: 50 °C / 80 °C | | | 12 | 11 | 11 | 10 | 9,0 |
| | III: 72 °C / 120 °C | | | 11 | 10 | 10 | 9,0 | 8,0 |
| | IV: 90 °C / 150 °C | | | 10 | 9,5 | 9,0 | 8,5 | 7,5 |
| **Installation factors** | | | | | | | | |
| Dry or wet concrete | | $\gamma_{inst}$ | [-] | 1,0 | | | | |
| **Cracked concrete** | | | | | | | | |
| **Characteristic bond resistance in cracked concrete C20/25** | | | | | | | | |
| Hammer-drilling with standard drill bit or hollow drill bit (dry or wet concrete) | | | | | | | | |
| Temperature range | I: 24 °C / 40 °C | $\tau_{Rk,cr}$ | [N/mm²] | 5,0 | | | | |
| | II: 50 °C / 80 °C | | | 5,0 | | | | |
| | III: 72 °C / 120 °C | | | 4,5 | | | | |
| | IV: 90 °C / 150 °C | | | 4,0 | | | | |
| **Installation factors** | | | | | | | | |
| Dry or wet concrete | | $\gamma_{inst}$ | [-] | 1,0 | | | | |

**Table C8.1:** Characteristic resistance to **combined pull-out** and concrete failure for **fischer internal threaded anchors RG M I** in hammer or diamond drilled holes in combination with **resin capsule RSB**; **uncracked or cracked concrete**

| **Internal threaded anchor RG M I** | | | | **M8** | **M10** | **M12** | **M16** | **M20** |
|---|---|---|---|---|---|---|---|---|
| **Combined pullout and concrete cone failure** | | | | | | | | |
| Sleeve diameter | | d | [mm] | 12 | 16 | 18 | 22 | 28 |
| **Uncracked concrete** | | | | | | | | |
| **Characteristic bond resistance in uncracked concrete C20/25** | | | | | | | | |
| Hammer-drilling with standard drill bit or hollow drill bit (dry or wet concrete as well as water filled hole) | | | | | | | | |
| Temperature range | I: 24 °C / 40 °C | $\tau_{Rk,ucr}$ | [N/mm²] | 12 | 12 | 11 | 11 | 9,5 |
| | II: 50 °C / 80 °C | | | 12 | 11 | 11 | 10 | 9,0 |
| | III: 72 °C / 120 °C | | | 11 | 10 | 10 | 9,0 | 8,0 |
| | IV: 90 °C / 150 °C | | | 10 | 9,5 | 9,0 | 8,5 | 7,5 |
| Diamond-drilling (dry or wet concrete as well as water filled hole) | | | | | | | | |
| Temperature range | I: 24 °C / 40 °C | $\tau_{Rk,ucr}$ | [N/mm²] | 13 | 12 | 12 | 11 | 10 |
| | II: 50 °C / 80 °C | | | 13 | 12 | 12 | 11 | 9,5 |
| | III: 72 °C / 120 °C | | | 11 | 11 | 10 | 9,5 | 8,5 |
| | IV: 90 °C / 150 °C | | | 10 | 10 | 9,5 | 9,0 | 8,0 |
| **Installation factors** | | | | | | | | |
| Dry or wet concrete | | $\gamma_{inst}$ | [-] | 1,0 | | | | |
| Water filled hole | | | | 1,2 | 1,0 | | | |
| **Cracked concrete** | | | | | | | | |
| **Characteristic bond resistance in cracked concrete C20/25** | | | | | | | | |
| Hammer-drilling with standard drill bit or hollow drill bit (dry or wet concrete as well as water filled hole) | | | | | | | | |
| Temperature range | I: 24 °C / 40 °C | $\tau_{Rk,cr}$ | [N/mm²] | 5,0 | | | | |
| | II: 50 °C / 80 °C | | | 5,0 | | | | |
| | III: 72 °C / 120 °C | | | 4,5 | | | | |
| | IV: 90 °C / 150 °C | | | 4,0 | | | | |
| Diamond-drilling (dry or wet concrete as well as water filled hole) | | | | | | | | |
| Temperature range | I: 24 °C / 40 °C | $\tau_{Rk,cr}$ | [N/mm²] | -[1)] | 5,0 | | | |
| | II: 50 °C / 80 °C | | | -[1)] | 5,0 | | | |
| | III: 72 °C / 120 °C | | | -[1)] | 4,5 | | | |
| | IV: 90 °C / 150 °C | | | -[1)] | 4,0 | | | |
| **Installation factors** | | | | | | | | |
| Dry or wet concrete | | $\gamma_{inst}$ | [-] | 1,0 | | | | |
| Water filled hole | | | | 1,2 | 1,0 | | | |

[1)] No performance assessed

**Table C9.1:** Characteristic resistance to **combined pull-out** and concrete failure for **reinforcing bars** in hammer drilled holes in combination with **injection mortar FIS SB**; **uncracked or cracked concrete**

| **Nominal diameter of the bar** | | | **ϕ** | **8** | **10** | **12** | **14** | **16** | **20** | **25** | **28** | **32** |
|---|---|---|---|---|---|---|---|---|---|---|---|---|
| **Combined pullout and concrete cone failure** | | | | | | | | | | | | |
| Bar diameter | | d | [mm] | 8 | 10 | 12 | 14 | 16 | 20 | 25 | 28 | 32 |
| **Uncracked concrete** | | | | | | | | | | | | |
| **Characteristic bond resistance in uncracked concrete C20/25** | | | | | | | | | | | | |
| Hammer-drilling with standard drill bit or hollow drill bit (dry or wet concrete) | | | | | | | | | | | | |
| Temperature range | I: 24 °C / 40 °C | $\tau_{Rk,ucr}$ | [N/mm²] | 8,0 | 8,5 | 9,0 | 9,5 | 9,5 | 10 | 9,5 | 9,0 | 7,5 |
| | II: 50 °C / 80 °C | | | 8,0 | 8,5 | 9,0 | 9,0 | 9,5 | 9,5 | 9,0 | 8,5 | 7,5 |
| | III: 72 °C / 120 °C | | | 7,0 | 7,5 | 8,0 | 8,0 | 8,5 | 8,5 | 8,0 | 7,5 | 6,5 |
| | IV: 90 °C / 150 °C | | | 6,5 | 7,0 | 7,0 | 7,5 | 7,5 | 8,0 | 7,5 | 7,0 | 6,0 |
| **Installation factors** | | | | | | | | | | | | |
| Dry or wet concrete | | $\gamma_{inst}$ | [-] | 1,0 | | | | | | | | |
| **Cracked concrete** | | | | | | | | | | | | |
| **Characteristic bond resistance in cracked concrete C20/25** | | | | | | | | | | | | |
| Hammer-drilling with standard drill bit or hollow drill bit (dry or wet concrete) | | | | | | | | | | | | |
| Temperature range | I: 24 °C / 40 °C | $\tau_{Rk,cr}$ | [N/mm²] | 4,5 | 6,0 | 6,0 | 6,0 | 7,0 | 6,0 | 6,0 | 6,0 | 6,0 |
| | II: 50 °C / 80 °C | | | 4,5 | 5,5 | 5,5 | 5,5 | 6,5 | 6,0 | 6,0 | 6,0 | 6,0 |
| | III: 72 °C / 120 °C | | | 4,0 | 5,0 | 5,0 | 5,0 | 6,0 | 5,5 | 5,5 | 5,5 | 5,5 |
| | IV: 90 °C / 150 °C | | | 3,5 | 4,5 | 4,5 | 4,5 | 5,5 | 5,0 | 5,0 | 5,0 | 5,0 |
| **Installation factors** | | | | | | | | | | | | |
| Dry or wet concrete | | $\gamma_{inst}$ | [-] | 1,0 | | | | | | | | |

**Table C10.1:** Characteristic resistance to **combined pull-out** and concrete failure for **fischer rebar anchors FRA** in hammer drilled holes in combination with **injection mortar FIS SB**; **uncracked or cracked concrete**

| **fischer rebar anchor FRA** | | | | **M12** | **M16** | **M20** | **M24** |
|---|---|---|---|---|---|---|---|
| **Combined pullout and concrete cone failure** | | | | | | | |
| Bar diameter | | d | [mm] | 12 | 16 | 20 | 25 |
| **Uncracked concrete** | | | | | | | |
| **Characteristic bond resistance in uncracked concrete C20/25** | | | | | | | |
| Hammer-drilling with standard drill bit or hollow drill bit (dry or wet concrete) | | | | | | | |
| Temperature range | I: 24 °C / 40 °C | $\tau_{Rk,ucr}$ | [N/mm²] | 9,0 | 9,5 | 10 | 9,5 |
| | II: 50 °C / 80 °C | | | 9,0 | 9,5 | 9,5 | 9,0 |
| | III: 72 °C / 120 °C | | | 8,0 | 8,5 | 8,5 | 8,0 |
| | IV: 90 °C / 150 °C | | | 7,0 | 7,5 | 8,0 | 7,5 |
| **Installation factors** | | | | | | | |
| Dry or wet concrete | | $\gamma_{inst}$ | [-] | 1,0 | | | |
| **Cracked concrete** | | | | | | | |
| **Characteristic bond resistance in cracked concrete C20/25** | | | | | | | |
| Hammer-drilling with standard drill bit or hollow drill bit (dry or wet concrete) | | | | | | | |
| Temperature range | I: 24 °C / 40 °C | $\tau_{Rk,cr}$ | [N/mm²] | 6,0 | 7,0 | 6,0 | 6,0 |
| | II: 50 °C / 80 °C | | | 5,5 | 6,5 | 6,0 | 6,0 |
| | III: 72 °C / 120 °C | | | 5,0 | 6,0 | 5,5 | 5,5 |
| | IV: 90 °C / 150 °C | | | 4,5 | 5,5 | 5,0 | 5,0 |
| **Installation factors** | | | | | | | |
| Dry or wet concrete | | $\gamma_{inst}$ | [-] | 1,0 | | | |

## Table C11.1: Displacements for anchor rods

| Anchor rod | | M8 | M10 | M12 | M16 | M20 | M24 | M27 | M30 |
|---|---|---|---|---|---|---|---|---|---|
| **Displacement-Factors for tension loading[1)]** | | | | | | | | | |
| **Uncracked or cracked concrete; Temperature range I, II, III, IV** | | | | | | | | | |
| $\delta_{N0\text{-Factor}}$ | [mm/(N/mm²)] | 0,07 | 0,08 | 0,09 | 0,10 | 0,11 | 0,12 | 0,12 | 0,13 |
| $\delta_{N\infty\text{-Factor}}$ | | 0,13 | 0,14 | 0,15 | 0,17 | 0,17 | 0,18 | 0,19 | 0,19 |
| **Displacement-Factors for shear loading[2)]** | | | | | | | | | |
| **Uncracked or cracked concrete; Temperature range I, II, III, IV** | | | | | | | | | |
| $\delta_{V0\text{-Factor}}$ | [mm/kN] | 0,18 | 0,15 | 0,12 | 0,09 | 0,07 | 0,06 | 0,05 | 0,05 |
| $\delta_{V\infty\text{-Factor}}$ | | 0,27 | 0,22 | 0,18 | 0,14 | 0,11 | 0,09 | 0,08 | 0,07 |

1) Calculation of effective displacement:

$\delta_{N0} = \delta_{N0\text{-Factor}} \cdot \tau$

$\delta_{N\infty} = \delta_{N\infty\text{-Factor}} \cdot \tau$

$\tau$: acting bond strength under tension loading

2) Calculation of effective displacement:

$\delta_{V0} = \delta_{V0\text{-Factor}} \cdot V$

$\delta_{V\infty} = \delta_{V\infty\text{-Factor}} \cdot V$

V: acting shear loading

## Table C11.2: Displacements for fischer internal threaded anchors RG M I

| Internal threaded anchor RG M I | | M8 | M10 | M12 | M16 | M20 |
|---|---|---|---|---|---|---|
| **Displacement-Factors for tension loading[1)]** | | | | | | |
| **Uncracked or cracked concrete; Temperature range I, II, III, IV** | | | | | | |
| $\delta_{N0\text{-Factor}}$ | [mm/(N/mm²)] | 0,09 | 0,10 | 0,10 | 0,11 | 0,19 |
| $\delta_{N\infty\text{-Factor}}$ | | 0,13 | 0,15 | 0,15 | 0,17 | 0,19 |
| **Displacement-Factors for shear loading[2)]** | | | | | | |
| **Uncracked or cracked concrete; Temperature range I, II, III, IV** | | | | | | |
| $\delta_{V0\text{-Factor}}$ | [mm/kN] | 0,12 | 0,09 | 0,08 | 0,07 | 0,05 |
| $\delta_{V\infty\text{-Factor}}$ | | 0,18 | 0,14 | 0,12 | 0,10 | 0,08 |

1) Calculation of effective displacement:

$\delta_{N0} = \delta_{N0\text{-Factor}} \cdot \tau$

$\delta_{N\infty} = \delta_{N\infty\text{-Factor}} \cdot \tau$

$\tau$: acting bond strength under tension loading

2) Calculation of effective displacement:

$\delta_{V0} = \delta_{V0\text{-Factor}} \cdot V$

$\delta_{V\infty} = \delta_{V\infty\text{-Factor}} \cdot V$

V: acting shear loading

## Table C12.1: Displacements for reinforcing bars

| Nominal diameter of the bar | ϕ | 8 | 10 | 12 | 14 | 16 | 20 | 25 | 28 | 32 |
|---|---|---|---|---|---|---|---|---|---|---|
| **Displacement-Factors for tension loading[1)]** | | | | | | | | | | |
| **Uncracked or cracked concrete; Temperature range I, II, III, IV** | | | | | | | | | | |
| $\delta_{N0\text{-Factor}}$ | [mm/(N/mm²)] | 0,07 | 0,08 | 0,09 | 0,09 | 0,10 | 0,11 | 0,12 | 0,13 | 0,13 |
| $\delta_{N\infty\text{-Factor}}$ | | 0,11 | 0,13 | 0,13 | 0,15 | 0,16 | 0,16 | 0,18 | 0,20 | 0,20 |
| **Displacement-Factors for shear loading[2)]** | | | | | | | | | | |
| **Uncracked or cracked concrete; Temperature range I, II, III, IV** | | | | | | | | | | |
| $\delta_{V0\text{-Factor}}$ | [mm/kN] | 0,18 | 0,15 | 0,12 | 0,10 | 0,09 | 0,07 | 0,06 | 0,05 | 0,05 |
| $\delta_{V\infty\text{-Factor}}$ | | 0,27 | 0,22 | 0,18 | 0,16 | 0,14 | 0,11 | 0,09 | 0,08 | 0,06 |

1) Calculation of effective displacement:

$\delta_{N0} = \delta_{N0\text{-Factor}} \cdot \tau$

$\delta_{N\infty} = \delta_{N\infty\text{-Factor}} \cdot \tau$

$\tau$: acting bond strength under tension loading

2) Calculation of effective displacement:

$\delta_{V0} = \delta_{V0\text{-Factor}} \cdot V$

$\delta_{V\infty} = \delta_{V\infty\text{-Factor}} \cdot V$

V: acting shear loading

## Table C12.2: Displacements for fischer rebar anchors FRA

| fischer rebar anchor FRA | | M12 | M16 | M20 | M24 |
|---|---|---|---|---|---|
| **Displacement-Factors for tension load[1)]** | | | | | |
| **Uncracked or cracked concrete; Temperature range I, II, III, IV** | | | | | |
| $\delta_{N0\text{-Factor}}$ | [mm/(N/mm²)] | 0,09 | 0,10 | 0,11 | 0,12 |
| $\delta_{N\infty\text{-Factor}}$ | | 0,13 | 0,15 | 0,16 | 0,18 |
| **Displacement-Factors for shear load[2)]** | | | | | |
| **Uncracked or cracked concrete; Temperature range I, II, III, IV** | | | | | |
| $\delta_{V0\text{-Factor}}$ | [mm/kN] | 0,12 | 0,09 | 0,07 | 0,06 |
| $\delta_{V\infty\text{-Factor}}$ | | 0,18 | 0,14 | 0,11 | 0,09 |

1) Calculation of effective displacement:

$\delta_{N0} = \delta_{N0\text{-Factor}} \cdot \tau$

$\delta_{N\infty} = \delta_{N\infty\text{-Factor}} \cdot \tau$

$\tau$: acting bond strength under tension loading

2) Calculation of effective displacement:

$\delta_{V0} = \delta_{V0\text{-Factor}} \cdot V$

$\delta_{V\infty} = \delta_{V\infty\text{-Factor}} \cdot V$

V: acting shear loading

**Table C13.1:** Characteristic resistance to **steel failure** under tension / shear loading of **fischer anchor rods** and **standard threaded rods** under seismic action performance category **C1 or C2**

| Anchor rod / standard threaded rod | | | | | M8 | M10 | M12 | M16 | M20 | M24 | M27 | M30 |
|---|---|---|---|---|---|---|---|---|---|---|---|---|
| **Characteristic resistance to steel failure under tension loading[1)]** | | | | | | | | | | | | |
| **fischer anchor rods and standard threaded rods, performance category C1 [2)]** | | | | | | | | | | | | |
| Characteristic resistance $N_{Rk,s,C1}$ | Steel zinc plated | Property class | 5.8 | [kN] | 19(17) | 29(27) | 43 | 79 | 123 | 177 | 230 | 281 |
| | | | 8.8 | | 29(27) | 47(43) | 68 | 126 | 196 | 282 | 368 | 449 |
| | Stainless steel R and high corrosion resistant steel HCR | | 50 | | 19 | 29 | 43 | 79 | 123 | 177 | 230 | 281 |
| | | | 70 | | 26 | 41 | 59 | 110 | 172 | 247 | 322 | 393 |
| | | | 80 | | 30 | 47 | 68 | 126 | 196 | 282 | 368 | 449 |
| **fischer anchor rods and standard threaded rods, performance category C2 [2)]** | | | | | | | | | | | | |
| Characteristic resistance $N_{Rk,s,C2}$ | Steel zinc plated | Property class | 5.8 | [-] | -[4)] | -[4)] | 39 | 72 | 108 | 177 | -[4)] | -[4)] |
| | | | 8.8 | | -[4)] | -[4)] | 61 | 116 | 173 | 282 | -[4)] | -[4)] |
| | Stainless steel R and high corrosion resistant steel HCR | | 50 | | -[4)] | -[4)] | 39 | 72 | 108 | 177 | -[4)] | -[4)] |
| | | | 70 | | -[4)] | -[4)] | 53 | 101 | 152 | 247 | -[4)] | -[4)] |
| | | | 80 | | -[4)] | -[4)] | 61 | 116 | 173 | 282 | -[4)] | -[4)] |
| **Characteristic resistance to steel failure under shear loading without lever arm[1)]** | | | | | | | | | | | | |
| **fischer anchor rods, performance category C1 [2)]** | | | | | | | | | | | | |
| Characteristic resistance $V_{Rk,s,C1}$ | Steel zinc plated | Property class | 5.8 | [kN] | 11(10) | 17(16) | 25 | 47 | 74 | 106 | 138 | 168 |
| | | | 8.8 | | 15(13) | 23(21) | 34 | 63 | 98 | 141 | 184 | 225 |
| | Stainless steel R and high corrosion resistant steel HCR | | 50 | | 9 | 15 | 21 | 39 | 61 | 89 | 115 | 141 |
| | | | 70 | | 13 | 20 | 30 | 55 | 86 | 124 | 161 | 197 |
| | | | 80 | | 15 | 23 | 34 | 63 | 98 | 141 | 184 | 225 |
| **Standard threaded rods, performance category C1 [2)]** | | | | | | | | | | | | |
| Characteristic resistance $V_{Rk,s,C1}$ | Steel zinc plated | Property class | 5.8 | [kN] | 8(7) | 12(11) | 17 | 33 | 52 | 74 | 97 | 118 |
| | | | 8.8 | | 11 | 16(14) | 24 | 44 | 69 | 99 | 129 | 158 |
| | Stainless steel R and high corrosion resistant steel HCR | | 50 | | 6 | 11 | 15 | 27 | 43 | 62 | 81 | 99 |
| | | | 70 | | 9 | 14 | 21 | 39 | 60 | 87 | 113 | 138 |
| | | | 80 | | 11 | 16 | 24 | 44 | 69 | 99 | 129 | 158 |
| **fischer anchor rods and standard threaded rods, performance category C2** | | | | | | | | | | | | |
| Characteristic resistance $V_{Rk,s,C2}$ | Steel zinc plated | Property class | 5.8 | [-] | -[4)] | -[4)] | 14 | 27 | 43 | 62 | -[4)] | -[4)] |
| | | | 8.8 | | -[4)] | -[4)] | 22 | 44 | 69 | 99 | -[4)] | -[4)] |
| | Stainless steel R and high corrosion resistant steel HCR | | 50 | | -[4)] | -[4)] | 14 | 27 | 43 | 62 | -[4)] | -[4)] |
| | | | 70 | | -[4)] | -[4)] | 20 | 39 | 60 | 87 | -[4)] | -[4)] |
| | | | 80 | | -[4)] | -[4)] | 22 | 44 | 69 | 99 | -[4)] | -[4)] |
| Factor for the annular gap | | $\alpha_{gap}$ | | [-] | 0,5 (1,0)[3)] | | | | | | | |

[1)] Partial factors for performance category C1 or C2 see Table C14.2;
for fischer anchor rods FIS A / RG M the factor for steel ductility is 1,0

[2)] Values in brackets are valid for undersized threaded rods with smaller stress area $A_s$ for hot dip galvanized standard threaded rods according to EN ISO 10684:2004+AC:2009.

[3)] Values in brackets are valid for filled annular gaps between the anchor rod and the through-hole in the attachment. It is necessary to use the fischer filling disc according to Annex A 1 and A 3.

[4)] No performance assessed.

**Table C14.1:** Characteristic resistance to **steel failure** under tension / shear loading for of **reinforcing bars (B500B)** under seismic action performance category **C1**

| **Nominal diameter of the bar** | | **ϕ** | **8** | **10** | **12** | **14** | **16** | **20** | **25** | **28** | **32** |
|---|---|---|---|---|---|---|---|---|---|---|---|
| **Bearing capacity under tension load, steel failure[1)]** | | | | | | | | | | | |
| **Reinforcing bar B500B acc. to DIN 488-2:2009-08, performance category C1** | | | | | | | | | | | |
| Characteristic resistance | $N_{Rk,s,C1}$ | [kN] | 27,1 | 42,3 | 61,0 | 83,5 | 108,5 | 169,5 | 265,1 | 332,6 | 434,1 |
| **Bearing capacity under shear load, steel failure without lever arm[1)]** | | | | | | | | | | | |
| **Reinforcing bar B500B acc. to DIN 488-2:2009-08, performance category C1** | | | | | | | | | | | |
| Characteristic resistance | $V_{Rk,s,C1}$ | [kN] | 9,5 | 14,8 | 21,3 | 29,1 | 37,9 | 59,3 | 92,7 | 116,4 | 151,9 |

[1)] Partial factors for performance category C1 see Table C14.2

**Table C14.2:** **Partial factors** for **fischer anchor rods, standard threaded rods** and **reinforcing bars (B500B)** under seismic action performance category **C1 or C2**

| **Anchor rod / standard threaded rod** | | | | **M8** | **M10** | **M12** | **M16** | **M20** | **M24** | **M27** | **M30** |
|---|---|---|---|---|---|---|---|---|---|---|---|
| **Nominal diameter of the bar** | | | **ϕ** | **8** | **10** | **12** | **14** | **16** | **20** | **25** | **28** | **32** |
| **Tension load, steel failure[1)]** | | | | | | | | | | | | |
| Partial factor $\gamma_{Ms,N}$ | Steel zinc plated | Property class | 5.8 | [-] | 1,50 | | | | | | | |
| | | | 8.8 | | 1,50 | | | | | | | |
| | Stainless steel R and high corrosion resistant steel HCR | | 50 | | 2,86 | | | | | | | |
| | | | 70 | | 1,87 / fischer HCR: 1,50 [2] | | | | | | | |
| | | | 80 | | 1,60 | | | | | | | |
| | Reinforcing bar | | B500B | | 1,40 | | | | | | | |
| **Shear load, steel failure[1)]** | | | | | | | | | | | | |
| Partial factor $\gamma_{Ms,V}$ | Steel zinc plated | Property class | 5.8 | [-] | 1,25 | | | | | | | |
| | | | 8.8 | | 1,25 | | | | | | | |
| | Stainless steel R and high corrosion resistant steel HCR | | 50 | | 2,38 | | | | | | | |
| | | | 70 | | 1,56 / fischer HCR: 1,25 [2] | | | | | | | |
| | | | 80 | | 1,33 | | | | | | | |
| | Reinforcing bar | | B500B | | 1,50 | | | | | | | |

[1)] In absence of other national regulations
[2)] Only admissible for high corrosion resistant steel HCR, with $f_{yk} / f_{uk} \geq 0,8$ and $A_5 > 12$ % (e.g. fischer anchor rods)

**Table C15.1:** Characteristic resistance to **combined pull-out** and concrete failure for **fischer anchor rods** and **standard threaded rods** in hammer drilled holes with **injection mortar FIS SB** or **resin capsule RSB** under seismic action performance category **C1**

| **Anchor rod / standard threaded rod** | | | | **M8** | **M10** | **M12** | **M16** | **M20** | **M24** | **M27**[1] | **M30** |
|---|---|---|---|---|---|---|---|---|---|---|---|
| **Characteristic bond resistance, combined pullout and concrete cone failure** | | | | | | | | | | | |
| **Hammer-drilling with standard drill bit or hollow drill bit (dry or wet concrete; resin capsule RSB additional in water filled holes)** | | | | | | | | | | | |
| Temperature range | I: 24 °C / 40 °C | $\tau_{Rk,C1}$ | [N/mm²] | 4,6 | 5,0 | 5,6 | 5,6 | 5,6 | 5,6 | 5,6 | 6,4 |
| | II: 50 °C / 80 °C | | | 4,3 | 4,6 | 5,6 | 5,6 | 5,6 | 5,6 | 5,3 | 6,0 |
| | III: 72 °C / 120 °C | | | 3,9 | 4,3 | 4,9 | 4,9 | 4,9 | 4,9 | 4,5 | 5,1 |
| | IV: 90 °C / 150 °C | | | 3,6 | 3,9 | 4,5 | 4,5 | 4,5 | 4,5 | 4,1 | 4,7 |
| **Installation factors** | | | | | | | | | | | |
| Dry or wet concrete | | $\gamma_{inst}$ | [-] | 1,0 | | | | | | | |
| Water filled hole | | | | 1,2 [2] | | 1,0 [2] | | | | | |

[1] Only use with injection mortar FIS SB.
[2] Only use with resin capsule RSB in water filled hole
.

**Table C15.2:** Characteristic resistance to **combined pull-out** and concrete failure for **reinforcing bars** in hammer drilled holes with **injection mortar FIS SB** under seismic action performance category **C1**

| **Nominal diameter of the bar** | | | **ϕ** | **8** | **10** | **12** | **14** | **16** | **20** | **25** | **28** | **32** |
|---|---|---|---|---|---|---|---|---|---|---|---|---|
| **Characteristic bond resistance, combined pullout and concrete cone failure** | | | | | | | | | | | | |
| **Hammer-drilling with standard drill bit or hollow drill bit (dry or wet concrete)** | | | | | | | | | | | | |
| Temperature range | I: 24 °C / 40 °C | $\tau_{Rk,C1}$ | [N/mm²] | 3,2 | 4,3 | 4,5 | 4,5 | 5,3 | 4,5 | 4,5 | 4,5 | 5,1 |
| | II: 50 °C / 80 °C | | | 3,2 | 3,9 | 4,1 | 4,1 | 4,9 | 4,5 | 4,5 | 4,5 | 5,1 |
| | III: 72 °C / 120 °C | | | 2,8 | 3,6 | 3,8 | 3,8 | 4,5 | 4,1 | 4,1 | 4,1 | 4,7 |
| | IV: 90 °C / 150 °C | | | 2,5 | 3,2 | 3,4 | 3,4 | 4,1 | 3,8 | 3,8 | 3,8 | 4,3 |
| **Installation factors** | | | | | | | | | | | | |
| Dry or wet concrete | | $\gamma_{inst}$ | [-] | 1,0 | | | | | | | | |

**Table C16.1:** Characteristic resistance to **combined pull-out** and concrete failure for for **fischer anchor rods** and **standard threaded rods** in hammer drilled holes with **injection mortar FIS SB** under seismic action performance category **C2**

| **Anchor rod / standard threaded rod** | | | | **M12** | **M16** | **M20** | **M24** |
|---|---|---|---|---|---|---|---|
| **Characteristic bond resistance, combined pullout and concrete cone failure** | | | | | | | |
| **Hammer-drilling with standard drill bit or hollow drill bit (dry or wet concrete)** | | | | | | | |
| Temperature range | I: 24 °C / 40 °C | $\tau_{Rk,C2}$ | [N/mm²] | 4,5 | 3,2 | 2,6 | 3,0 |
| | II: 50 °C / 80 °C | | | 4,5 | 3,2 | 2,6 | 3,0 |
| | III: 72 °C / 120 °C | | | 3,9 | 2,7 | 2,3 | 2,6 |
| | IV: 90 °C / 150 °C | | | 3,6 | 2,5 | 2,1 | 2,4 |
| **Installation factors** | | | | | | | |
| Dry or wet concrete | | $\gamma_{inst}$ | [-] | 1,0 | | | |
| **Displacement-Factors for tension loading**[1)] | | | | | | | |
| $\delta_{N,C2\ (DLS)}$-Factor | | [mm/(N/mm²)] | | 0,09 | 0,10 | 0,11 | 0,12 |
| $\delta_{N,C2\ (ULS)}$-Factor | | | | 0,15 | 0,17 | 0,17 | 0,18 |
| **Displacement-Factors for shear loading**[2)] | | | | | | | |
| $\delta_{V,C2\ (DLS)}$-Factor | | [mm/kN] | | 0,18 | 0,10 | 0,07 | 0,06 |
| $\delta_{V,C2\ (ULS)}$-Factor | | | | 0,25 | 0,14 | 0,11 | 0,09 |

[1)] Calculation of effective displacement:

$\delta_{N,C2\ (DLS)} = \delta_{N,C2\ (DLS)\text{-Factor}} \cdot \tau$

$\delta_{N,C2\ (ULS)} = \delta_{N,C2\ (ULS)\text{-Factor}} \cdot \tau$

$\tau$: acting bond strength under tension loading

[2)] Calculation of effective displacement:

$\delta_{V,C2\ (DLS)} = \delta_{V,C2\ (DLS)\text{-Factor}} \cdot V$

$\delta_{V,C2\ (ULS)} = \delta_{V,C2\ (ULS)\text{-Factor}} \cdot V$

V: acting shear loading