DECLARACIÓN DE PRESTACIONES

DoP W0009

para tornillos fischer PowerFast II

ES

1. Código de identificación única del producto tipo: **DoP W0009**

2. Usos previstos: **Tornillos autotaladrantes para estructuras de madera, véase el apéndice, especialmente los anexos 1, 2.**

3. Fabricante: **fischerwerke GmbH & Co. KG, Klaus-Fischer-Str. 1, 72178 Waldachtal, Alemania**

4. Representante autorizado: **–**

5. Sistemas de evaluación y verificación de la constancia de las prestaciones (EVCP): **3**

6. Documento de evaluación europeo: **EAD 130118-01-0603**
   Evaluación técnica europea: **ETA-19/0175; 2021-08-09**
   Organismo de evaluación técnica: **ETA-Danmark A/S**
   Organismos notificados: **2699 Universität Innsbruck**

7. Prestaciones declaradas:

Resistencia mecánica y estabilidad (BWR 1), Seguridad de utilización y accesibilidad (BWR 4)

Dimensiones:	Anexos 17-24
Momento flector característico:	Anexo 6
Ángulo flector:	Anexo 3
Parámetros de arranque característicos:	Anexos 6-8
Parámetros característicos de punzonamiento de la cabeza:	Anexo 9
Resistencia característica a tracción:	Anexos 3, 9
Límite elástico característico:	Anexo 6
Resistencia característica a la torsión:	Anexo 3
Par de atornillado:	Anexo 3
Distancias de los tornillos entre ejes, al final y al borde, además de espesor mínimo de la madera:	Anexos 11-14
Módulo de deslizamiento para tornillos solicitados principalmente de forma axial:	Anexo 11
Durabilidad frente a la corrosión:	Anexo 15

Seguridad en caso de incendio (BWR 2)

Reacción al fuego:	Clase (A1)

8. Documentación técnica adecuada o documentación técnica específica: **–**

Las prestaciones del producto identificado anteriormente son conformes con el conjunto de prestaciones declaradas. La presente declaración de prestaciones se emite, de conformidad con el Reglamento (UE) no 305/2011, bajo la sola responsabilidad del fabricante arriba identificado.

Firmado por y en nombre del fabricante por:

Dr.-Ing. Oliver Geibig, Director General Unidades de Negocio e Ingeniería

Jürgen Grün, Director General de Química y Calidad

Tumlingen, 2021-08-16

Esta DdR se ha preparado en distintos idiomas. En caso de que haya alguna controversia sobre la interpretación prevalecerá siempre la versión inglesa.

El Apéndice incluye información voluntaria y complementaria en idioma inglés que excede los requisitos legales (de idioma neutral).

II SPECIFIC PART OF THE EUROPEAN TECHNICAL ASSESSMENT

1 Technical description of product

»fischer PowerFast II« screws are self-tapping screws to be used in timber structures. They shall be threaded over a part of the length or over the whole length. The screws shall be produced from carbon steel wire for nominal diameters between 3,0 mm and 6,0 mm. Where corrosion protection is required, the material or coating shall be declared in accordance with the relevant specification given in Annex A of EN 14592.

The FAFS-Clip are made of zinc die cast for »fischer PowerFast II« screws with countersunk head and a diameter of 5,0 mm.

Geometry and Material
The nominal diameter d (outer thread diameter) of the screws shall not be less than 3,0 mm and not greater than 6,0 mm.

The overall length l_s of the screws, shall not be less than 20 mm and shall not be greater than 300 mm. Dimensions see Annex A.

The ratio of inner thread diameter to outer thread diameter d_1/d ranges from 0,50 to 0,80.

The screws are threaded over a minimum length l_g of 4,0·d (i.e. $l_g \geq 4{,}0 \cdot d$).

The thread pitch p (distance between two adjacent thread flanks) ranges from 0,50·d to 0,85·d.

No breaking shall be observed at a bending angle of $\alpha \leq (45/d^{0,7} + 20)°$.

2 Specification of the intended use in accordance with the applicable EAD

The screws are used for connections in load bearing timber structures between members, softwood and hardwood of: Solid Timber (C), Glued-Laminated Timber (GL), Cross-Laminated Timber (CLT) and Laminated Veneer Lumber (LVL), similar glued members, Wood-Based Panels or steel. »fischer PowerFast II« screws with a thread over the full length can also be used as tensile or compressive reinforcement perpendicular to the grain or as shear reinforcement. Furthermore »fischer PowerFast II«

screws with diameter of 6 mm may also be used for fixing of thermal insulation on rafters and on vertical facades and 5 mm screws can be combined with the FAFS-Clip.

Steel plates, wood-based panels and plasterboards shall only be fixed on the side of the screw head. The minimum thickness of wood-based panels should be 1,2·d..

The following wood-based panels can be used:

- Plywood according to EN 636 or European Technical Assessment or national provisions that apply at the installation site
- Particleboard according to EN 312 or European Technical Assessment or national provisions that apply at the installation site
- Oriented Strand Board (OSB) according to EN 300 or European Technical Assessment or national provisions that apply at the installation site
- Fibreboard according to EN 622-2, EN 622-3 and EN 622-5 or European Technical Assessment (minimum density 650 kg/m³) or national provisions that apply at the installation site
- Cement-bonded particleboard according to EN 634, European Technical Assessment or national provisions at the installation site
- Solid wood panels according to EN 13353 or European Technical Assessment or national provisions that apply at the installation site
- Wood-based panels for use in constructions according to EN 13986
- Cross-Laminated Timber (CLT) according to European Technical Assessment
- Laminated Veneer Lumber (LVL) according to EN 14374 or European Technical Assessment
- Engineered wood products according to European Technical Assessments, provided that the ETA for the product provides provisions for the use of self-tapping screws and these provisions are applied

The screws shall be driven into softwood and hardwood with a maximum characteristic density of 730 kg/m³ without pre-drilling or after pre-drilling (see Table 1 and Table 2) with a diameter not larger than the inner thread diameter for the length of the threaded part and with a maximum of the smooth shank diameter for the length of the smooth shank.

Table 1: Recommended pre-drilling diameters

Nominal diameter *d* [mm]	Bore-hole diameter [mm]	
	Softwood	Hardwood
3,0	2,0	2,5
3,5	2,0	2,5
4,0	2,5	3,0
4,5	2,5	3,0
5,0	3,0	3,0
6,0	4,0	4,0

Recommended values without pre-drilling for the maximum penetration length of the threaded part of »fischer PowerFast II« made of carbon steel in wood-based members like ash, beech and oak or LVL according to ETA-14/0354 (e.g. Baubuche) are shown in Table 2. The FAFS-Clip can be installed with or without pre-drilling (see chapter 3.7.11), recommended borehole diameter 5 mm.

Table 2: Recommended penetration length without pre-drilling in hardwood

Nominal diameter *d* [mm]	Maximum penetration length [mm]
3,0	40
3,5	45
4,0	50
4,5	60
5,0	70
6,0	70

To fix steel parts with the head side of the screw, the boreholes must be pre-drilled with a suitable diameter.

When using screws with a countersunk, step countersunk and raised countersunk head, the upper surface of the screw head must be flush with the surface of the timber part. Countersinking deeper is not permitted and should be avoided, because of damaging the surface and reduce the durability of the construction. Countersunk head screws made of carbon steel according to Annex A1 and A2 can be used together with washers according to Annex A8. Washers according to EN ISO 7094 can be used together with washers according to Annex A8.
For the use of screws in the edge side of wood-based panels one have to pre-drill with a diameter not larger than the inner thread diameter for the length of the threaded part and with a maximum of the smooth shank diameter for the length of the smooth shank.

Pan head, step countersunk and washer head screws according to Annex A3, A4 and A5, may be used together with washers according to EN ISO 7094.

»fischer PowerFast II« screws can be driven in with standard screw drillers and with torque impact screw drivers too (e.g. fischer FSS 18V 400 BL or fischer FSS 18V 600). In combination with steel plates, torque controlled tools e.g. torque wrenches have to be used. For the use of screws in wood-based panels, like particle- and fibreboards, the screws have to be tightened carefully to ensure the characteristic load bearing capacity.

The design of the connections shall be based on the characteristic load-carrying capacities of the screws.
The design capacities shall be derived from the characteristic capacities in accordance with Eurocode 5 or an appropriate national code. The screws are intended for the use of connections subjected to static or quasi-static loadings.
The zinc-coated screws are for the use in timber structures subjected to the moisture defined by the service classes 1 and 2 according to EN 1995-1-1.

The intended use of the screws is in timber connections for which all requirements of mechanical resistance, stability and safety in use in the sense of the Basic Works Requirements 1 and 4 of Regulation 305/2011 (EU) shall be fulfilled.

The provisions made in this European Technical Assessment are based on an assumed intended working life of the screws of 50 years.

The indications given on the working life cannot be interpreted as a guarantee given by the producer or Assessment Body, but are to be regarded only as a means for choosing the right products in relation to the expected economically reasonable working life of the products.

3 Performance of the product and references to the methods used for its assessment

Characteristic	Assessment of characteristic
3.1 Mechanical resistance and stability (BWR1)	
Characteristic yield moment **Characteristic withdrawal parameter** **Characteristic head pull-trough parameter of screws** **Characteristic yield strength** **Insertion moment** **Spacing, end and edge distances** **Slip modulus**	See section 3.7 to 3.9
Bending angle	No breaking has been observed at a bending angle of $\alpha \leq 45°/d^{0,7}+20°$
Tensile strength PowerFast II	Characteristic value $f_{tens,k}$: d= 3,0 mm 3,2 kN d= 3,5 mm 4,1 kN d= 4,0 mm 5,2 kN d= 4,5 mm 6,3 kN d= 5,0 mm 8,9 kN d= 6,0 mm 13,1 kN
Torsional strength PowerFast II	Characteristic value $f_{tor,k}$: d= 3,0 mm 1,5 Nm d= 3,5 mm 2,0 Nm d= 4,0 mm 3,0 Nm d= 4,5 mm 4,2 Nm d= 5,0 mm 6,0 Nm d= 6,0 mm 10,0 Nm *Note: Ratio of the characteristic torsional strength to the mean insertion moment:* $f_{tor,k} / R_{tor,mean} \geq 1,5$
3.2 Safety in case of fire (BWR2)	
Reaction to fire	The screws are made from steel classified as Performance Class A1 of the characteristic reaction to fire, in accordance with the provisions of Commission Delegated Regulation 2016/364 and EC decision 96/603/EC, amended by EC Decision 2000/605/EC.
3.3 Safety in use (BWR4)	See aspects covered by BWR1
3.4 Durability against corrosion	The screws have been assessed as having satisfactory durability and serviceability when used in timber structures using the timber species described in EN 1995-1-1 and subjected to the conditions defined by service classes 1 and 2
3.5 Identification	See Annex A
3.6 Typical and special application area	See Annex B

3.7 Mechanical Resistance and Stability

The load-carrying capacities for the »fischer PowerFast II« screws are applicable to the wood-based materials mentioned in paragraph 1 even though the term "timber" has been used in the following. European Technical Assessments for structural members or wood-based panels must be considered if applicable.

The characteristic lateral load-carrying capacities and the characteristic axial withdrawal capacities of »fischer PowerFast II« screws should be used for designs in accordance with Eurocode 5 (EN 1995-1-1) or an appropriate valid national code.

Reductions in the cross-sectional area caused by »fischer PowerFast II« screws shall be taken into account in accordance to the Eurocode 5.

3.7.1 Lateral load-carrying capacity $f_{h,k}$

The characteristic lateral load-carrying capacity of »fischer PowerFast II« screws shall be calculated according to EN 1995-1-1. The contribution of the rope effect may be considered. For the calculation of the load-carrying capacity, the following parameters should be taken into account.

3.7.1.1 Embedment strength $f_{h,\alpha,k}$ for use in Solid Timber (EN 338, EN 15497) and Glued-Laminated Timber (EN 14080)

The embedment strength for »fischer PowerFast II« screws in non-pre-drilled holes arranged at an angle between load and grain direction, $0° \leq \alpha \leq 90°$ can be calculated with the help of equation (1).

$$f_{h,k} = 0{,}082 \cdot \rho_k \cdot d^{-0{,}3} \qquad (1)$$

The embedment strength for »fischer PowerFast II« screws in pre-drilled holes arranged at an angle between load and grain direction, $0° \leq \alpha \leq 90°$ can be calculated with the help of equation (2).

$$f_{h,\alpha,k} = 0{,}082 \cdot \rho_k \cdot (1 - 0{,}01 \cdot d) \qquad (2)$$

Note: For the calculation according to the EN 1995-1-1 for the calculation of the effective diameter the nominal diameter d should be used.

Screws parallel to the end-grain direction are only allowed for short-time loads and can be calculated with the help of equation (3).

$$f_{h,k} = 0{,}0076 \cdot \rho_k^{1{,}24} \cdot d^{-0{,}3} \qquad (3)$$

Where

α Angle between load and the grain direction [°]
$f_{h,k}$ Characteristic embedment strength [N/mm²]
ρ_k Characteristic timber gross density [kg/m³]
d Nominal diameter of the screw [mm]

3.7.1.2 Embedment strength $f_{h,\alpha,k}$ for use in Cross-Laminated Timber

If there are no other technical specification (ETA or hEN) for Cross-Laminated Timber (CLT), the embedment strength for screws can be calculated as following. The following specifications are only for screws with a diameter of at least 5 mm, otherwise possible influences of gaps between the single lamellas have to be considered.

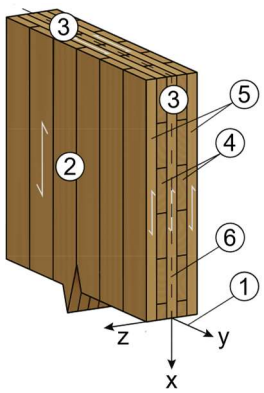

Figure 1: Notations CLT-elements

(1) Element plane
(2) Plane surface
(3) Edge surface (Narrow side)
(4) Inner layer (Inner lamellas)
(5) Outer layer (Outer lamellas)
(6) Middle layer (Middle lamella)

Screws in the plane surface

The embedment strength for screws in the plane surface of CLT-elements should be assumed as for solid timber according to equation (1) or (2), based on the characteristic density of the outer layer. If relevant, the angle between force and grain direction of the outer layer should be considered.

Screws in the narrow (edge) side

The embedment strength for screws in the narrow side of CLT-elements should be assumed according to equation (4).

$$f_{h,k} = 20 \cdot d^{-0{,}5} \qquad (4)$$

3.7.1.3 Embedment strength $f_{h,\alpha,k}$ for use in Laminated Veneer Lumber according to (ETA-14/0354)

The embedment strength for »fischer PowerFast II« screws with d ≥ 5 mm arranged at an angle between load and grain direction, 0° ≤ α ≤ 90° can be calculated with the help of equation (5) in direction 90|90 (see figure 2).

$$f_{h,\alpha,k} = \frac{f_{h,0,k}}{(0{,}9 + 0{,}037 \cdot d) \cdot \sin^2 \alpha + \cos^2 \alpha} \qquad (5)$$

With
d = 5,0 mm: $f_{h,0,k}$ = 50,0 N/mm²
d = 6,0 mm: $f_{h,0,k}$ = 46,0 N/mm²

3.7.1.4 Embedment strength $f_{h,\alpha,k}$ for the use in Wood-Based Panels and Plasterboards

The embedment strength for »fischer PowerFast II« screws in non-pre-drilled holes, if no other descriptions are given in Table 3, arranged at an angle α=90° to the plane surface can be calculated with equation (6).

$$f_{h,k} = f_{h,90|90,k} \qquad (6)$$

Where
d Nominal diameter of the screw [mm]
t Minimum value of the thickness of the wood-based panels/plasterboards or effective penetration depth of the screw [mm]
With
$f_{h,90|90,k}$ Characteristic value of the embedment strength according to Table 3 and Figure 3; the influence of load-grain direction is negligible N/mm²]

Table 3: Characteristic values of the embedment strength of »fischer PowerFast II« screws in the plane surface

Material	[N/mm²]
OSB t > 5 mm (EN 300)	$f_{h,90/90,k} = 48 \cdot d^{-0,7} \cdot t^{0,1}$
EGGER OSB 4 TOP, pre-drilled t > 10 mm (EN 13986)	$f_{h,90/90,k} = 50 \cdot d^{-0,6} \cdot t^{0,2}$
EGGER OSB 4 TOP, without pre-drilling t >10 mm (EN 13986)	$f_{h,90/90,k} = 65 \cdot d^{-0,7} \cdot t^{0,1}$
Plywood t > 4 mm (EN 314-2)	$f_{h,90/90,k} = 65 \cdot d^{-0,7} \cdot t^{0,1}$
Fibreboards, hardboards (HDF) t > 3 mm (EN 622-2)	$f_{h,90/90,k} = 30 \cdot d^{-0,3} \cdot t^{0,6}$
Fibreboards medium boards (MDF) t > 3 mm (EN 622-3)	$f_{h,90/90,k} = 28 \cdot d^{-0,6} \cdot t^{0,6}$
Particleboards t > 5 mm (EN 312)	$f_{h,90/90,k} = 50 \cdot d^{-0,6} \cdot t^{0,2}$
Gypsum plasterboards t ≥ 9 mm (EN 520)	$f_{h,90/90,k} = 3{,}9 \cdot d^{-0,6} \cdot t^{0,7}$
Gypsum boards with fibrous reinforcement t ≥ 9 mm (EN 15283-2)	$f_{h,90/90,k} = 7{,}8 \cdot d^{-0,2} \cdot t^{0,7}$

The embedment strength for »fischer PowerFast II« screws in pre-drilled holes, if no other descriptions are given in Table 4, arranged at an angle α = 90° to the edge surface (see Figure 4) in EGGER OSB 4 TOP can be calculated with equation (7).

$$f_{h,k} = f_{h,90|00,k} \qquad (7)$$

Where
d Nominal diameter of the screw [mm]
t Penetration depth of the screws parallel to the plane surface in EGGER OSB TOP 4 panels [mm]
With
$f_{h,90|00,k}$ Characteristic value of the embedment strength; the influence of load-grain direction is negligible see table 4 and figure [N/mm²]

Table 4: Characteristic values of the embedment strength

of »fischer PowerFast II« screws in the edge surface		
Material		[N/mm²]
EGGER OSB 4 TOP, pre-drilled t >10 mm Load parallel to plane (EN 13986)	$f_{h,90/00,k}$ =	$12 \cdot d^{-0,6} \cdot t^{0,2}$
EGGER OSB 4 TOP, without pre-drilling t >10 mm Load parallel to plane (EN 13986)	$f_{h,90/00,k}$ =	$16 \cdot d^{-0,7} \cdot t^{0,1}$
EGGER OSB 4 TOP, pre-drilled t >10 mm Load normal to plane (EN 13986)	$f_{h,90/00,k}$ =	$40 \cdot d^{-0,6} \cdot t^{0,2}$
EGGER OSB 4 TOP, without pre-drilling t >10 mm Load normal to plane (EN 13986)	$f_{h,90/00,k}$ =	$52 \cdot d^{-0,7} \cdot t^{0,1}$

3.7.1.5 Effective number of screws per row n_{ef}

For laterally loaded screws, the rules for multiple fastener connections in EN 1995-1-1 should be applied.

3.7.2 Yield strength $f_{y,k}$

The characteristic yield strength of the different screw types of »fischer PowerFast II« can be taken into account as shown below.

$$f_{y,k} = 1050 \text{ N/mm}^2 \tag{8}$$

3.7.3 Yield moment $M_{y,Rk}$

The characteristic yield moment shall be calculated with the help of equation (9)

$$M_{y,Rk} = 0,15 \cdot 600 \cdot d^{2,65} \tag{9}$$

Where

$M_{y,Rk}$ Characteristic yield moment [Nmm]

d Nominal diameter of the threaded part [mm]

3.7.4 Axial withdrawal capacity $f_{ax,k}$

The axial withdrawal capacity is limited by the head pull-through capacity, the withdrawal capacity and the tensile or compressive capacity of the screw.

For »fischer PowerFast II« fully threaded screws, the withdrawal capacity of the thread in the member with the head may be considered instead of the head pull-through capacity.

3.7.4.1 Withdrawal capacity $F_{ax,\alpha,Rk}$ for use in Solid Timber (EN 338, EN 15497), Glued-Laminated Timber (EN 14080) and Laminated Veneer Lumber according to (ETA-14/0354)

In solid timber and glued-laminated timber of softwood, the characteristic withdrawal capacity of »fischer PowerFast II« screws, with an angle of $0° \leq \alpha \leq 90°$; shall be calculated according to equation (10).

$$F_{ax,\alpha,Rk} = n_{ef} \cdot k_{ax} \cdot f_{ax,90,k} \cdot d \cdot l_{ef} \cdot \left(\frac{\rho_k}{350}\right)^{0,8} \tag{10}$$

With

$$k_{ax} = \min \begin{cases} 0,3 + (0,7 \cdot \alpha) / 45° \\ 1,00 \end{cases} \tag{11}$$

According to equation (12) the point side penetration length has to be considered between the following ranges.

$$l_{ef} = \min \begin{cases} \dfrac{4 \cdot d}{\sin \alpha} \\ 20 \cdot d \end{cases} \tag{12}$$

Where

d Outer thread diameter [mm]

l_{ef} Penetration length of the threaded part according to EN 1995-1-1; For fully threaded screws the thread length including the head length in [mm]

α Angle between grain and screw axis [°]

ρ_k Characteristic timber gross density [kg/m³]

$F_{ax,\alpha,Rk}$ Characteristic withdrawal capacity of the screw with an angle α to the grain [N]

n_{ef} Effective number of screws according to EN 1995-1-1

With

$f_{ax,90,k}$ Characteristic withdrawal parameter, shown in Table 5

Table 5: Characteristic withdrawal parameters

PowerFast II	Solid Timber or Glued-Laminated Timber	
d= 3,0 mm	$f_{ax,90,k}$ =	15,5 N/mm²
d= 3,5 mm	$f_{ax,90,k}$ =	14,9 N/mm²
d= 4,0 mm	$f_{ax,90,k}$ =	14,5 N/mm²
d= 4,5 mm	$f_{ax,90,k}$ =	14,1 N/mm²
d= 5,0 mm	$f_{ax,90,k}$ =	13,8 N/mm²
d= 6,0 mm	$f_{ax,90,k}$ =	12,9 N/mm²
PowerFast II	**LVL according to ETA-14/0354**	
d= 5,0 mm	$f_{ax,90\|90,k}$ =	40,0 N/mm²
	$f_{ax,90\|00,k}$ =	32,0 N/mm²
	$f_{ax,00\|00,k}$ =	32,0 N/mm²
d= 6,0 mm	$f_{ax,90\|90,k}$ =	32,0 N/mm²
	$f_{ax,90\|00,k}$ =	24,0 N/mm²
	$f_{ax,00\|00,k}$ =	24,0 N/mm²

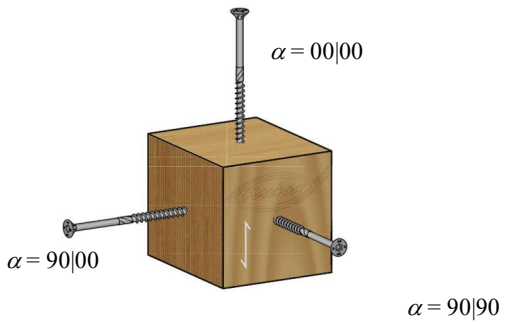

Figure 2: PowerFast II in hardwood LVL

The characteristic withdrawal capacity in hardwood LVL according to ETA-14/0354 of »fischer PowerFast II« screws with an angle of 0° ≤ α ≤ 90° shall be calculated according to equation (13).

$$F_{ax,\alpha,Rk} = n_{ef} \cdot k_{ax} \cdot f_{ax,\alpha|\alpha,k} \cdot d \cdot l_{ef} \cdot \left(\frac{\rho_k}{730}\right)^{0,8} \qquad (13)$$

3.7.4.2 Withdrawal capacity $F_{ax,Rk}$ for use in Cross-Laminated Timber

If there are no other technical specification (ETA or hEN) for Cross-Laminated Timber (CLT), the withdrawal capacity for screws can be calculated as following.

Screws in the plane surface

The withdrawal capacity for screws with $d \geq 6$ mm in the plane surface of CLT-elements should be assumed as for solid timber according to equation (10) based on a characteristic density of equation (14), if there are no other specifications are given. For not edge-bonded lamellas, equation (10) is only valid for screws with an outer diameter of $d \geq 5,0$ mm. If necessary gaps between the single lamellas have to be considered.

$$\rho_k = 1,1 \cdot \rho_{lay,k} \qquad (14)$$

With

$\rho_{lay,k}$ Lowest characteristic density of the lamellas in a layer of the CLT-element [kg/m³]

Screws in the narrow side

The withdrawal capacity for screws in the narrow side of CLT-elements should be assumed according to equation (15).

$$F_{ax,Rk} = 20 \cdot d^{0,8} \cdot l_{ef}^{\;0,9} \qquad (15)$$

Screws in the narrow side should be driven perpendicular into the grain of the lamella. The penetration length has to be at least $3 \cdot d + l_{ef}$.
If it is guaranteed that the angle between the lamellas and the screw axis is ≥ 30° the characteristic withdrawal capacity from equation (15) can be increased of about 25 %.

For screws penetrating more than one layer of Cross-Laminated Timber, the different layers may be considered proportionally.

3.7.4.3 Withdrawal capacity $F_{ax,Rk}$ for use in Wood-Based Panels

Screws in the plane surface

The characteristic axial withdrawal capacity of »fischer PowerFast II« screws with an angle of α = 90|90 in wood-based panels with a minimum thickness and/or a penetration depth of the threaded part of at least $4 \cdot d$ can be calculated according to equation (16) for applications in the plane surface.

$$F_{ax,\alpha,Rk} = n_{ef} \cdot f_{ax,90|90,k} \cdot d \cdot l_{ef} \qquad (16)$$

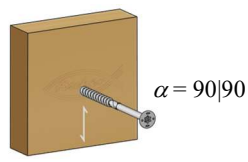

Figure 3: PowerFast II in the plane surface

Where

$f_{ax,90|90,k}$ Characteristic withdrawal parameter in the plane surface, shown in Table 6

Table 6: Characteristic withdrawal parameters of »fischer PowerFast II« screws in the plane surface

PowerFast II	OSB (EN 300)	
d= 3,0 mm	$f_{ax,90\|90,k}$ =	9,3 N/mm²
d= 3,5 mm	$f_{ax,90\|90,k}$ =	9,0 N/mm²
d= 4,0 mm	$f_{ax,90\|90,k}$ =	8,6 N/mm²
d= 4,5 mm	$f_{ax,90\|90,k}$ =	8,3 N/mm²
d= 5,0 mm	$f_{ax,90\|90,k}$ =	8,0 N/mm²
d= 6,0 mm	$f_{ax,90\|90,k}$ =	7,1 N/mm²
PowerFast II	Particleboard (EN 312)	
d= 3,0 mm	$f_{ax,90\|90,k}$ =	11,9 N/mm²
d= 3,5 mm	$f_{ax,90\|90,k}$ =	11,1 N/mm²
d= 4,0 mm	$f_{ax,90\|90,k}$ =	10,3 N/mm²
d= 4,5 mm	$f_{ax,90\|90,k}$ =	9,5 N/mm²
d= 5,0 mm	$f_{ax,90\|90,k}$ =	8,7 N/mm²
d= 6,0 mm	$f_{ax,90\|90,k}$ =	7,1 N/mm²
PowerFast II	Fibreboards (EN 622-2, EN 622-3)	
d= 3,0 mm	$f_{ax,90\|90,k}$ =	13,2 N/mm²
d= 3,5 mm	$f_{ax,90\|90,k}$ =	12,4 N/mm²
d= 4,0 mm	$f_{ax,90\|90,k}$ =	11,6 N/mm²
d= 4,5 mm	$f_{ax,90\|90,k}$ =	10,8 N/mm²
d= 5,0 mm	$f_{ax,90\|90,k}$ =	10,0 N/mm²
d= 6,0 mm	$f_{ax,90\|90,k}$ =	8,5 N/mm²
PowerFast II	LVL (EN 14374) $\rho_k \geq 480$ kg/m³	
d= 3,0 mm	$f_{ax,90\|90,k}$ =	16,0 N/mm²
d= 3,5 mm	$f_{ax,90\|90,k}$ =	15,4 N/mm²
d= 4,0 mm	$f_{ax,90\|90,k}$ =	14,7 N/mm²
d= 4,5 mm	$f_{ax,90\|90,k}$ =	14,0 N/mm²
d= 5,0 mm	$f_{ax,90\|90,k}$ =	13,3 N/mm²
d= 6,0 mm	$f_{ax,90\|90,k}$ =	12,0 N/mm²

Screws in the narrow side

The characteristic axial withdrawal capacity of »fischer PowerFast II« screws for pre-drilled applications in the edge surface with an angle α = 90|00 in wood-based panels with a thickness of at least *5·d* arranged in the center of the thickness of the panel with a penetration depth of the threaded part of the screws of at least *6·d* can be calculated according to equation (17).

$$F_{ax,\alpha,Rk} = n_{ef} \cdot f_{ax,90|00,k} \cdot d \cdot l_{ef} \qquad (17)$$

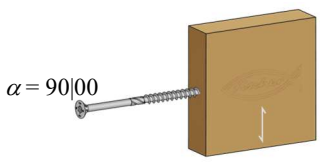

Figure 4: PowerFast II in the edge surface

Where

$f_{ax,90|00,k}$ Characteristic withdrawal parameter in the <u>edge surface</u>, shown in Table 7

Table 7: Characteristic withdrawal parameters of »fischer PowerFast II« screws in the edge surface

PowerFast II	OSB (EN 300)	
d= 4,0 mm	$f_{ax,90\|00,k}$ =	6,0 N/mm²
d= 4,5 mm	$f_{ax,90\|00,k}$ =	5,8 N/mm²
d= 5,0 mm	$f_{ax,90\|00,k}$ =	5,6 N/mm²
d= 6,0 mm	$f_{ax,90\|00,k}$ =	5,1 N/mm²
PowerFast II	Particleboard (EN 312)	
d= 4,0 mm	$f_{ax,90\|00,k}$ =	5,6 N/mm²
d= 4,5 mm	$f_{ax,90\|00,k}$ =	5,4 N/mm²
d= 5,0 mm	$f_{ax,90\|00,k}$ =	5,2 N/mm²
d= 6,0 mm	$f_{ax,90\|00,k}$ =	4,7 N/mm²
PowerFast II	Fibreboards (EN 622-2, EN 622-3)	
d= 4,0 mm	$f_{ax,90\|00,k}$ =	7,0 N/mm²
d= 4,5 mm	$f_{ax,90\|00,k}$ =	6,5 N/mm²
d= 5,0 mm	$f_{ax,90\|00,k}$ =	6,0 N/mm²
d= 6,0 mm	$f_{ax,90\|00,k}$ =	5,1 N/mm²
PowerFast II	LVL (EN 14374) $\rho_k \geq 480$ kg/m³	
d= 4,0 mm	$f_{ax,90\|00,k}$ =	9,2 N/mm²
d= 4,5 mm	$f_{ax,90\|00,k}$ =	8,8 N/mm²
d= 5,0 mm	$f_{ax,90\|00,k}$ =	8,4 N/mm²
d= 6,0 mm	$f_{ax,90\|00,k}$ =	7,5 N/mm²

3.7.4.4 Effective number of screws n_{ef}

For axially loaded screws in tension, where the external force is parallel to the screw axis, the rules in EN 1995-1-1, 8.7.2 (8) should be applied.

$$n_{ef} = n^{0,9} \qquad (18)$$

For inclined screws in timber-to-timber or steel-to-timber shear connections, where the screws are arranged under an angle 30° ≤ α ≤ 60° between the shear plane and the screw axis, the effective number of screws n_{ef} should be determined with the equation below.

$$n_{ef} = \max \begin{cases} n^{0,9} \\ 0,9 \cdot n \end{cases} \qquad (19)$$

With

n Number of (inclined/cross pairs) screws in a row parallel to the grain direction

For screws as compression reinforcement or inclined screws as fasteners in mechanically jointed beams or columns $n_{ef} = n$.

3.7.5 Head pull-through capacity $f_{head,k}$

3.7.5.1 Head pull-through capacity $f_{head,k}$ for use in Solid Timber (EN 338, EN 15497), Glued-Laminated Timber (EN 14080) and Laminated Veneer Lumber according to (ETA-14/0354)

The characteristic head pull-through capacity of »fischer PowerFast II« screws in solid timber can be calculate as following.

$$F_{head,Rk} = n_{ef} \cdot f_{head,k} \cdot d_h^2 \cdot \left(\frac{\rho_k}{350}\right)^{0,8} \qquad (20)$$

For timber elements with a thickness of at least 20 mm, the characteristic value of the head pull-through parameter $f_{head,k}$ can be taken into account as following.

Table 8: Head pull-through capacities in Solid Timber, GLT, CLT and LVL

Countersunk and Raised Countersunk, see Annex A1 and A2		
d= 3,0 mm	d_h= 6,0 mm	$f_{head,k}$=19,0 N/mm²
d= 3,5 mm	d_h= 7,0 mm	$f_{head,k}$=16,3 N/mm²
d= 4,0 mm	d_h= 8,0 mm	$f_{head,k}$=15,0 N/mm²
d= 4,5 mm	d_h= 8,8 mm	$f_{head,k}$=14,2 N/mm²
d= 5,0 mm	d_h= 9,8 mm	$f_{head,k}$=13,4 N/mm²
d= 6,0 mm	d_h=11,8mm	$f_{head,k}$=13,0 N/mm²
Washer head, see Annex A4		
d= 5,0 mm	d_h=11,0mm	$f_{head,k}$= 20,0 N/mm²
d= 6,0 mm	d_h=13,5mm	$f_{head,k}$= 15,5 N/mm²
Step Countersunk head, see Annex A5		
d= 5,0 mm	d_h=11,0mm	$f_{head,k}$= 19,5 N/mm²
d= 6,0 mm	d_h=13,5mm	$f_{head,k}$= 15,0 N/mm²
Screw with clamping effect, see Annex A6		
d= 3,5 mm	d= 7,0 mm	$f_{head,k} \cdot d_h^2$= 1220 N
d= 4,0 mm	d= 8,0 mm	$f_{head,k} \cdot d_h^2$= 1485 N
d= 4,5 mm	d= 9,0 mm	$f_{head,k} \cdot d_h^2$= 1750 N

3.7.5.2 Head pull-through capacity $f_{head,k}$ for use in Wood-Based Panels

For the following wood-based panels described in Chapter 1 with a thickness of more than 20 mm the head pull-through parameter can constitute with

$$f_{head,k} = 10 \text{ N/mm}^2 \qquad (21)$$

For wood-based panels with a thickness between 12 mm and 20 mm the characteristic value of the head pull-through parameter can be calculated with

$$f_{head,k} = 8 \text{ N/mm}^2 \qquad (22)$$

For wood-based panels with a thickness of less than 12 mm the characteristic head pull-through capacity shall be calculated with $f_{head,k}$=8 N/mm² with a limit of 400 N complying with a minimum thickness of the wood based panels of 1,2·d. In addition, to apply the minimum thickness of *Table 9*.

Table 9: Minimum thickness of Wood-Based Panels be fixed on the side of the screw head

Wood-based panel	Min. thickness [mm]
Plywood	6
Oriented Strand board OSB	8
Solid wood panels	12
Particleboards	8
Cement bonded particle boards	8
Fibreboards (hard boards and medium boards)	6
Gypsum fibre and Plasterboards	12

3.7.5.3 Head pull/push-through capacity of the FAFS-Clip of adjustable frame screw

The screws with the FAFS- Clip may be arranged under an angle of about 90°.

The load bearing capacities given in this section are valid for a quality of the battens of at least C20 ($\rho_k \geq 330$ kg/m³).

The characteristic head pull-through capacity in softwood of the FAFS–Clip of adjustable frame screw can be calculated for tension loads onto the screws with

$$F_{FAFS,t,Rk} = 2200 \text{ N} \qquad (23)$$

and for compression loads (push-through capacity) onto the screws with

$$F_{FAFS,c,Rk} = 1290 \text{ N} \qquad (24)$$

3.7.6 Tensile capacity $f_{tens,k}$

The characteristic tensile capacity $f_{tens,k}$ of »fischer PowerFast II« screws depending on the outer diameter is given below.

Table 10: Tensile capacity

PowerFast II		
d= 3,0 mm	$f_{tens,k}$ =	3,2 kN
d= 3,5 mm	$f_{tens,k}$ =	4,1 kN
d= 4,0 mm	$f_{tens,k}$ =	5,2 kN
d= 4,5 mm	$f_{tens,k}$ =	6,3 kN
d= 5,0 mm	$f_{tens,k}$ =	8,9 kN
d= 6,0 mm	$f_{tens,k}$ =	13,1 kN

The tear-off capacity of the screw head is greater than the tensile capacity of the screw.

3.7.7 Compression capacity

The design compressive capacity $F_{ax,Rd}$ of »fischer PowerFast II« screws with full thread along the length embedded in timber shall be calculated as following.

$$F_{ax,Rd} = \min \begin{cases} F_{ax,Rd} \\ F_{ki,Rd} \end{cases} \tag{25}$$

Where

$F_{ax,Rd}$ According to equation (10)

$F_{ki,Rd}$ According to equation (26)

$$F_{ki,Rd} = \kappa_c \cdot N_{pl,d} \tag{26}$$

With

$$\kappa_c = 1 \qquad \text{for } \bar{\lambda} \le 0,2$$
$$\kappa_c = \frac{1}{k + \sqrt{k^2 - \bar{\lambda}^2}} \qquad \text{for } \bar{\lambda} > 0,2 \tag{27}$$

and

$$k = 0,5 \cdot \left[1 + 0,49 \cdot \left(\bar{\lambda} - 0,2 \right) + \bar{\lambda}^2 \right] \tag{28}$$

The relative slenderness ratio shall be calculated with

$$\bar{\lambda} = \sqrt{\frac{N_{pl,k}}{N_{ki,k}}} \tag{29}$$

With the characteristic value for the axial capacity in case of plastic analysis referred to the outer thread diameter. Yield strength $f_{y,k}$ see equation (8)..

$$N_{pl,k} = \frac{(0,7 \cdot d)^2 \cdot \pi}{4} \cdot f_{y,k} \tag{30}$$

And the characteristic ideal elastic buckling load

$$N_{ki,k} = \sqrt{c_h \cdot E_s \cdot I_s} \tag{31}$$

With the

Elastic foundation of the screw:

$$c_h = \left(0,19 + 0,0084 \cdot d \right) \cdot \rho_k \cdot \left(\frac{\alpha}{180°} + 0,5 \right) \tag{32}$$

Modulus of elasticity:

$$E_s = 210.000 \text{ N/mm}^2 \tag{33}$$

Second moment of area:

$$I_s = \frac{\pi \cdot (0,7 \cdot d)^4}{64} \tag{34}$$

Note: The compressive capacity must be modified for $f_{ax,d}$ with the factors k_{mod} and γ_M for timber according to EN 1995-1-1 while $N_{pl,d}$ the partial-factor $\gamma_{M,1}$ for steel buckling according to EN 1993-1-1 and/or national standards respectively have to be considered.

3.7.8 Combined laterally and axially loaded screws

For connections subjected to a combination of axial and lateral loads, the following expression has to be considered according to equation (35).

$$\left(\frac{F_{ax,Ed}}{F_{ax,Rd}} \right)^2 + \left(\frac{F_{v,Ed}}{F_{v,Rd}} \right)^2 \le 1 \tag{35}$$

With

$F_{ax,Ed}$ Axial design action [N]

$F_{v,Ed}$ Lateral design action [N]

$F_{ax,Rd}$ Design load-carrying capacity of an axially loaded screw [N]

$F_{v,Rd}$ Design load-carrying capacity of a laterally loaded screw [N]

3.7.9 Slip modulus in the serviceability limit state

Laterally loaded screws

For laterally loaded »fischer PowerFast II« screws, the slip modulus, pre-drilled or non-pre-drilled, for the serviceability limit state (SLS) should be calculated according to EN 1995-1-1 independent of the load grain-direction angle α with equation (36).

$$K_{v,ser} = k_{st} \cdot k_{sp} \cdot C_{v,ser} \tag{36}$$

With

$$k_{st} = \begin{cases} 1 & \text{for timber-timber connections} \\ 2 & \text{for steel-timber connections} \end{cases}$$

k_{sp} Number of shear planes

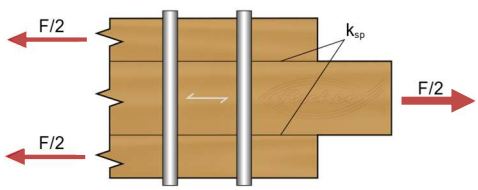

Figure 5: Definition of the shear plane k_{sp}

Where
ρ_m Mean timber density [kg/m³]

With
$C_{v,ser}$ Slip modulus in SLS, Table 11[N/mm]

Table 11: Slip modules for laterally loaded screws

Material	$C_{v,ser}$ [N/mm]
Solid Timber Glued-Laminated Timber Softwood and Hardwood (EN 338, EN 15497, EN 14080)	$\frac{\rho_m^{1,5} \cdot d}{23}$
OSB t > 5 mm (EN 300)	$6{,}8 \cdot \rho_m \cdot d^{-0,4}$
Plywood t > 4 mm (EN 314-2)	740
Fibreboards t > 3 mm (EN 622-2, EN 622-3)	$9 \cdot \rho_m \cdot d^{-0,9}$
Particleboards t > 5 mm (EN 312)	$3 \cdot \rho_m \cdot d^{-0,4}$
Gypsum plasterboards t≥9 mm (EN 520)	$6700 \cdot d^{-087}$
Gypsum boards with fibrous reinforcement t≥9 mm (EN 15283-2)	$1{,}4 \cdot \rho_m \cdot d^{-0,7}$
LVL Soft- and Hardwood (EN 14374)	$\frac{\rho_m^{1,5} \cdot d}{20}$

Axially loaded screws
For axially loaded screws the slip modulus for the serviceability limit state (SLS) can be calculated according to equation (37).

$$K_{ax,ser} = C_{ax,ser} \tag{37}$$

With
d Outer thread diameter [mm]
l_{ef} Penetration length of the threaded part in [mm]
$C_{v,ser}$ Slip modulus in SLS, Table 12 [N/mm]

Table 12: Slip modules for axially loaded screws, only plane surfaces

Material	$C_{ax,ser}$ [N/mm]
Softwood $\rho_k \geq 350$ kg/m³ independend of the angle α	$32 \cdot d \cdot l_{ef}$
Hardwood $\rho_k \geq 510$ kg/m³ independend of the angle α	$38 \cdot d \cdot l_{ef}$
OSB t > 5 mm (EN 300)	$10 \cdot d \cdot l_{ef}$
Fibreboards t > 3 mm (EN 622-2, EN 622-3)	$15 \cdot d \cdot l_{ef}$
Particleboards t > 5 mm (EN 312)	$10 \cdot d \cdot l_{ef}$
LVL (EN 14374) Soft- and Hardwood $\rho_k \geq 480$ kg/m³ α=90|90 see Figure 2	$28 \cdot d \cdot l_{ef}$

3.7.10 Slip modulus in the ultimate limit state
To consider the slip modulus K_u in the ultimate limit state (ULS) K_{ser} has to be reduced for both directions (laterally and axially) according to EN 1995-1-1 with

$$K_u = 2/3 \cdot K_{ser} \tag{38}$$

3.7.11 Minimum timber cross section, end- and edge distances
For structural timber members, minimum spacing and distances for screws in pre-drilled holes are given in EN 1995-1-1 clause 8.3.1.2 and table 8.2 as for nails in pre-drilled holes. Here, the outer thread diameter d must be considered.

Minimum thickness for structural members is in general t = 24 mm.

The FAFS-Clips may only be used in solid timber made of softwood. For the FAFS- Clip the minimum distances a1 and the minimum distances to the end grain in softwood have to be 60 mm for predrilled applications and 120 mm for non-predrilled applications.
The minimum cross section for predrilled and non-predrilled applications in softwood has to be at least *30 x 50* mm², minimum width of 50 mm and $a_{4,t} \geq 25$ *mm.*

Predrilling is allowed with a diameter of 5 mm.

A combination of predrilled and non- predrilled holes for the screws with the FAFS- Clip is permitted, e.g., if only the hole for the screw with FAFS- Clip positioned close the end grain is predrilled in the batten and a distance to the end grain of 60 mm is considered. The following screws in the batten do not have to be pre- drilled, but a distance between the screws with the FAFS- Clip of 120 mm then has to be considered.

3.7.11.1 Solid Timber (EN 338, EN 15497) and Glued-Laminated Timber (EN 14080)

Minimum distances and spacing for laterally loaded »fischer PowerFast II« screws in non-pre-drilled holes in members of solid timber, glued-laminated timber or similar glued products with a minimum thickness $t = 12 \cdot d$ and a minimum width of 60 mm, should be chosen with Table 14

Table 13: Head shapes, see Table 14 to Table 17

[1)]Head shapes	Description
	Screws with countersunk, step countersunk according to Annex A1, A2 and A6
	Screws with pan head and washer head according to Annex A3, A4 and A5
	Screws to fix steel plates on the head side according to Annex A1, A2, A3, A4, A5

Table 14: Laterally loaded screws: Minimum end- and edge distances for solid timber and glued-laminated timber products with a maximum gross density of 480 kg/m³ for non pre-drilled screws shown in Annex A1 to A5

Solid Timber and Glued-Laminated Timber (EN 338, EN 15497 and EN 14080)

Head shape[1)]	Minimum spacing and distances					
	a_1	a_2	$a_{3,c}$	$a_{3,t}$	$a_{4,c}$	$a_{4,t}$
	$(5+5\cdot\lvert\cos\alpha\rvert)\cdot d$	$5\cdot d$	$7\cdot d$	$(7+5\cdot\cos\alpha)\cdot d$	$5\cdot d$	$(5+2\cdot\sin\alpha)\cdot d$
	$(5+5\cdot\lvert\cos\alpha\rvert)\cdot d$	$5\cdot d$	$7\cdot d$	$(5+5\cdot\cos\alpha)\cdot d$	$5\cdot d$	$(5+2\cdot\sin\alpha)\cdot d$
	$3{,}5\cdot(1+\lvert\cos\alpha\rvert)\cdot d$	$3{,}5\cdot d$	$7\cdot d$	$(5+5\cdot\cos\alpha)\cdot d$	$5\cdot d$	$(5+2\cdot\sin\alpha)\cdot d$

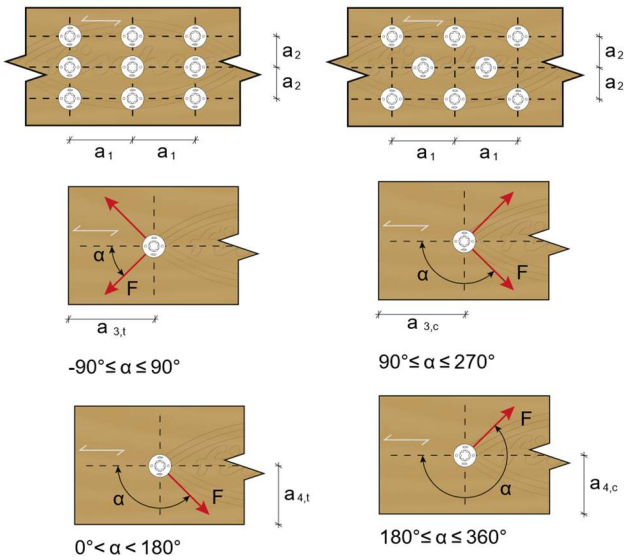

Notations

a_1	Spacing a_1 parallel to the grain of solid timber
a_2	Spacing a_2 perpendicular to the grain of solid timber
$a_{3,c}$	Distance $a_{3,c}$ from centre of the screw-part in timber to the unloaded end grain of solid timber
$a_{3,t}$	Distance $a_{4,c}$ from centre of the screw-part in timber to the loaded end grain of solid timber
$a_{4,c}$	Distance $a_{4,c}$ from centre of the screw-part in timber to the unloaded edge of solid timber
$a_{4,t}$	Distance $a_{4,t}$ from centre of the screw-part in timber to the loaded edge of solid timber

[1)] Head shape see Table 13

Minimum distances and spacing for exclusively axially loaded »fischer PowerFast II« screws in non-predrilled holes in members of solid timber (softwood and hardwood), glued laminated timber or similar glued products (softwood and hardwood) with a minimum thickness t = 12·d and a minimum width of 60 mm, whichever is the greater, may be taken as:

Table 15: Axially loaded screws: Minimum end- and edge distances for Solid Timber and Glued-Laminated Timber products

Solid Timber and Glued-Laminated Timber (EN 338, EN 15497 and EN 14080)

Head shape[1)]	Minimum spacing and distances			
	a_1	a_2	$a_{3,c}$	$a_{4,c}$
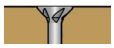	5·d	5·d	9·d	4·d

[1)] *Head shape see Table 13*

Spacing a_2 perpendicular to the grain may be reduced from *5·d* to *2,5·d*, if the condition $a_1 \cdot a_2 \geq 25 \cdot d^2$ is fulfilled. For Douglas fir members minimum spacing and distances parallel to the grain shall be increased by 50 %.

Minimum distances from the unloaded edge perpendicular to the grain may be reduced to *3·d* also for timber thickness $t < 5 \cdot d$, if the spacing parallel to the grain and the end distance is at least *25·d*.

3.7.11.2 Cross-Laminated Timber

Unless specified otherwise in the technical specification (ETA or hEN) of Cross-Laminated Timber, minimum distances and spacing for screws in the plane surface of Cross-Laminated timber members with a minimum thickness t = 10·d may be taken as shown in Table 16 and Table 17.

Unless specified otherwise in the technical specification (ETA or hEN) of Cross-laminated timber, minimum distances and spacing for screws in the edge surface of Cross- laminated timber members with a minimum thickness $t = 10 \cdot d$ and a minimum penetration depth perpendicular to the edge surface of *10·d* may be considered.

Table 16: Laterally and axially loaded screws: Minimum end- and edge distances for Cross-Laminated Timber in the plane surface

Cross-Laminated Timber
- Screws in the plane surface

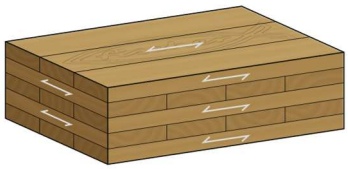

Head shape[1)]	Minimum spacing and distances					
	a_1	a_2	$a_{3,c}$	$a_{3,t}$	$a_{4,c}$	$a_{4,t}$
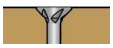	4·d	2,5·d	6·d	6·d	2,5·d	6·d
	4·d	2,5·d	6·d	5·d	2,5·d	6·d
	3·d	2,0·d	6·d	5·d	2,5·d	6·d

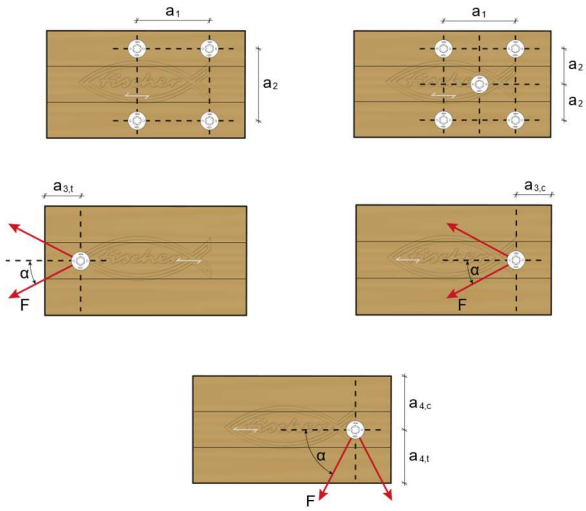

[1)] *Head shape see Table 13*

Table 17: Laterally and axially loaded screws: Minimum end- and edge distances for Cross-Laminated Timber in the edge surface

Cross-Laminated Timber
- Screws in the edge surface

Head shape[1)]	Minimum spacing and distances					
	a_1	a_2	$a_{3,c}$	$a_{3,t}$	$a_{4,c}$	$a_{4,t}$
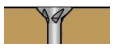	10·d	3·d	7·d	12·d	5·d	5·d
	10·d	3·d	7·d	12·d	5·d	5·d
	7·d	3·d	7·d	12·d	5·d	5·d

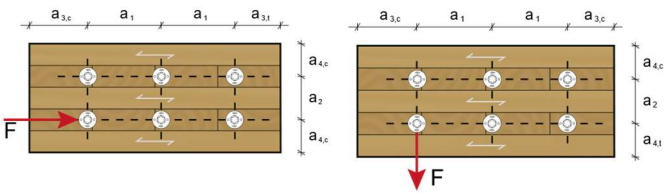

Notations	
a_1	Spacing a_1 parallel to the plane direction of the CLT-panel
a_2	Spacing a_2 perpendicular to plane direction of the CLT-panel
$a_{3,c}$	Distance $a_{3,c}$ from centre of the screw-part in timber to the unloaded edge in plane direction of the CLT-panel
$a_{3,t}$	Distance $a_{3,t}$ from centre of the screw-part in timber to the loaded edge in plane direction of the CLT-panel
$a_{4,c}$	Distance $a_{4,c}$ from centre of the screw-part in timber to the unloaded edge perpendicular to the plane direction of the CLT-panel
$a_{4,t}$	Distance $a_{4,t}$ from centre of the screw-part in timber to the loaded edge perpendicular to the plane direction of the CLT-panel

1) Head shape see Table 13

For a crossed screw couple, the minimum spacing between the crossing screws should be at least *1,5·d*.

3.8 Durability against corrosion

3.8.1 Corrosion protection in Service Class 1 and 2

The »fischer PowerFast II« screws are produced from carbon steel. They are zinc-plated (e.g. yellow-zinced or blue-zinced), bonus-zinc-coated, burnished, nickel-plated or brass-plated. The mean thickness of the zinc-plated screws is min. 5 µm.

3.9 General aspects related to the intended use of the product

The screws are manufactured in accordance with the provisions of the European Technical Assessment using the automated manufacturing process as identified during the inspection of the plant by the assessment body issuing the ETA and the notified body and laid down in the technical documentation. The installation shall be carried out in accordance with Eurocode 5 or an appropriate national code and in accordance with the instructions from fischerwerke GmbH & Co. KG.

4 Attestation and verification of constancy of performance (AVCP)

4.1 AVCP system

According to the decision 97/176/EC of the European Commission, as amended, the system(s) of assessment and verification of constancy of performance (see Annex V to Regulation (EU) No 305/2011) is 3.

Annex A: Product details and definitions
Table A1: Screw sizes and material

PowerFast II - Self-drilling screw - Countersunk head with full- or partial thread

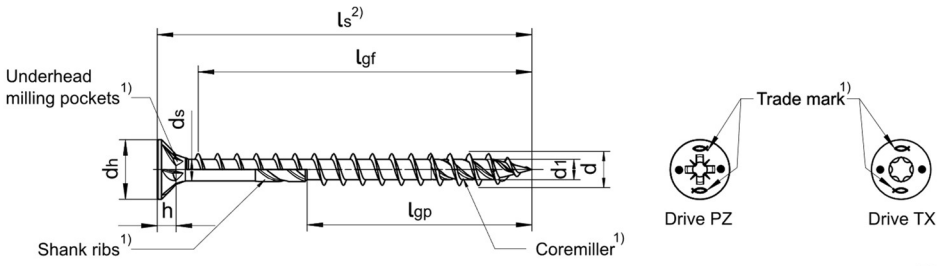

1)optional

Figure not to scale

- Carbon Steel
- Possible surface treatments: yellow zinc-plated, blue zinc-plated, blue zinc-plated ≥12µm, bonus-zinc-coated, burnished, nickel plated, brass plated

Nominal diameter		3,0	3,5		4,0	4,5	5,0		6,0
d	Outer thread diameter	3,00	3,50		4,00	4,50	5,10		6,00
	Allow. deviation	± 0,25	± 0,25		± 0,30	± 0,30	± 0,30		± 0,30
d_1	Inner thread diameter	1,95	2,20		2,50	2,75	3,25		3,95
	Allow. deviation	± 0,18	± 0,18		± 0,20	± 0,20	± 0,20		± 0,20
d_h	Head diameter	6,00	7,00		8,00	8,80	9,80		11,80
	Allow. deviation	± 0,50	± 0,50		± 0,60	± 0,60	± 0,60		± 0,60
d_s	Shank diameter	2,25	2,60		2,90	3,20	3,70		4,30
	Allow. deviation	± 0,15	± 0,15		± 0,15	± 0,15	± 0,15		± 0,15
h	Head height	2,30	2,50		2,80	2,90	3,40		3,50
Drive TX		10	10	20	20	20	20	25	30
Drive PZ		1	2		2	2	2		3

Screw length l_s2)			Standard thread length | l_{gf} = Full thread | l_{gp} =Partial thread | Tolerance: ± 2,0[3)]											
Nominal length	min	max	l_{gf}	l_{gp}	l_{gf}	l_{gp}	l_{gf}	l_{gp}	l_{gf}	l_{gp}	l_{gf}	l_{gp}	l_{gf}	l_{gp}
20	l_s –1,05	l_s +1,05	16		16									
25	l_s –1,25	l_s +1,25	21	18	21	18	20	18	20					
30	l_s –1,25	l_s +1,25	26	18	26	18	25	18	25	18	24			
35	l_s –1,50	l_s +1,50	31	24	31	24	30	24	30	24	29	24	28	
40	l_s –1,50	l_s +1,50	36	28	36	28	35	28	35	28	34	28	33	28
45	l_s –1,50	l_s +1,50	41	30	41	30	40	30	40	30	39	30	38	30
50	l_s –1,50	l_s +1,50			46	30	45	30	45	30	44	30	43	30
55	l_s –1,75	l_s +1,75					50	36	50	36	49	36	48	36
60	l_s –1,75	l_s +1,75					55	36	55	36	54	36	53	36
70	l_s –1,75	l_s +1,75						42	65	42	64	42	63	42
80	l_s –1,75	l_s +1,75						45	75	45	74	45	73	45
90	l_s –2,00	l_s +2,00										54		54
100	l_s –2,00	l_s +2,00										60		60
110	l_s –2,00	l_s +2,00										70		70
120	l_s –2,00	l_s +2,00										70		70
in steps of 10mm														
130-300	l_s –3,00	l_s +3,00												70

All sizes in mm

- Screws with partial thread > 60 mm l_s with shank ribs

2) Other screw lengths with l_s min ≤ l_s ≤ l_s max and other thread lengths l_{gf} resp. l_{gp} ≥ 4xd up to max. standard thread lengths are allowed

3) For 10mm ≤ l_{gf} resp., l_{gp} ≤ 18mm → tolerance ±1,5mm and for 18mm < l_{gf} resp. l_{gp} ≤ 30mm → tolerance ±1,7mm

fischer PowerFast II	**Annex A1**
Screw sizes and material	

Table A2: Screw sizes and material

PowerFast II - Self-drilling screw – Raised countersunk head with full- or partial thread

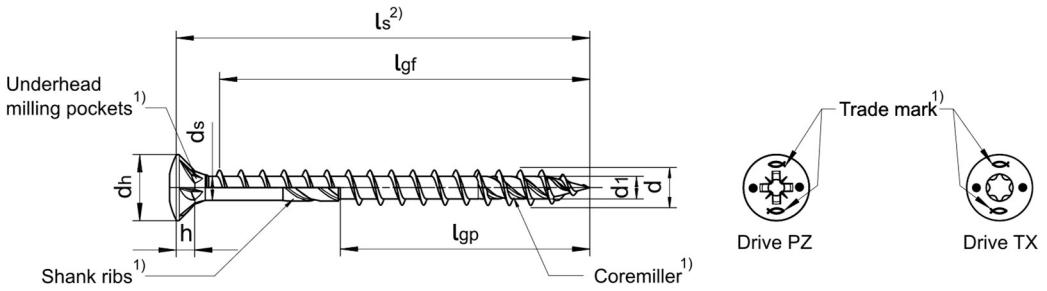

1)optional

Figure not to scale

- Carbon Steel
- Possible surface treatments: yellow zinc-plated, blue zinc-plated, blue zinc-plated ≥12µm, bonus-zinc-coated, burnished, nickel plated, brass plated

Nominal diameter		3,0	3,5		4,0	4,5	5,0		6,0
d	Outer thread diameter	3,00	3,50		4,00	4,50	5,10		6,00
	Allow. deviation	± 0,25	± 0,25		± 0,30	± 0,30	± 0,30		± 0,30
d_1	Inner thread diameter	1,95	2,20		2,50	2,75	3,25		3,95
	Allow. deviation	± 0,18	± 0,18		± 0,20	± 0,20	± 0,20		± 0,20
d_h	Head diameter	6,00	7,00		8,00	8,80	9,80		11,80
	Allow. deviation	± 0,50	± 0,50		± 0,60	± 0,60	± 0,60		± 0,60
d_s	Shank diameter	2,25	2,60		2,90	3,20	3,70		4,30
	Allow. deviation	± 0,15	± 0,15		± 0,15	± 0,15	± 0,15		± 0,15
h	Head height	1,80	2,30		2,40	2,70	3,00		3,60
Drive TX		10	10	20	20	20	20	25	30
Drive PZ		1	2		2	2	2		3

Screw length l_s 2)			Standard thread length | l_{gf} = Full thread | l_{gp} =Partial thread | Tolerance: ± 2,0 3)											
Nominal length	min	max	l_{gf}	l_{gp}	l_{gf}	l_{gp}	l_{gf}	l_{gp}	l_{gf}	l_{gp}	l_{gf}	l_{gp}	l_{gf}	l_{gp}
20	l_s –1,05	l_s +1,05	16		16									
25	l_s –1,25	l_s +1,25	21	18	21	18	20	18	20					
30	l_s –1,25	l_s +1,25	26	18	26	18	25	18	25	18	24			
35	l_s –1,50	l_s +1,50	31	24	31	24	30	24	30	24	29	24	28	
40	l_s –1,50	l_s +1,50	36	28	36	28	35	28	35	28	34	28	33	28
45	l_s –1,50	l_s +1,50	41	30	41	30	40	30	40	30	39	30	38	30
50	l_s –1,50	l_s +1,50			46	30	45	30	45	30	44	30	43	30
55	l_s –1,75	l_s +1,75					50	36	50	36	49	36	48	36
60	l_s –1,75	l_s +1,75					55	36	55	36	54	36	53	36
70	l_s –1,75	l_s +1,75						42	65	42	64	42	63	42
80	l_s –1,75	l_s +1,75						45	75	45	74	45	73	45
90	l_s –2,00	l_s +2,00										54		54
100	l_s –2,00	l_s +2,00										60		60
110	l_s –2,00	l_s +2,00										70		70
120	l_s –2,00	l_s +2,00										70		70
in steps of 10mm														
130-300	l_s –3,00	l_s +3,00												70

All sizes in mm

- Screws with partial thread > 60 mm l_s with shank ribs

2) Other screw lengths with l_s min ≤ l_s ≤ l_s max and other thread lengths l_{gf} resp. l_{gp} ≥ 4xd up to max. standard thread lengths are allowed

3) For 10 mm ≤ l_{gf} resp. l_{gp} ≤ 18 mm → tolerance ±1,5mm and for 18mm < l_{gf} resp. l_{gp} ≤ 30 mm → tolerance ±1,7 mm

fischer PowerFast II	**Annex A2**
Screw sizes and material	

Table A3: Screw sizes and material

PowerFast II - Self-drilling screw - Pan head with full- or partial thread

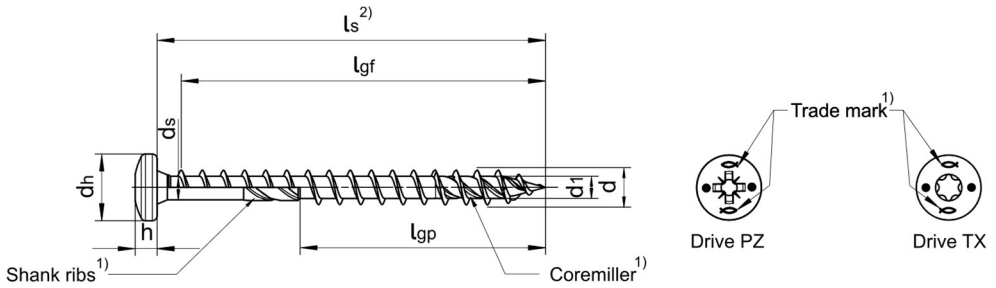

1)optional

Figure not to scale

- Carbon Steel
- Possible surface treatments: yellow zinc-plated, blue zinc-plated, blue zinc-plated ≥12µm, bonus-zinc-coated, burnished, nickel plated, brass plated

Nominal diameter		3,0	3,5		4,0	4,5	5,0		6,0
d	Outer thread diameter	3,00	3,50		4,00	4,50	5,10		6,00
	Allow. deviation	± 0,25	± 0,25		± 0,30	± 0,30	± 0,30		± 0,30
d_1	Inner thread diameter	1,95	2,20		2,50	2,75	3,25		3,95
	Allow. deviation	± 0,18	± 0,18		± 0,20	± 0,20	± 0,20		± 0,20
d_h	Head diameter	6,00	7,00		8,00	9,00	10,00		12,00
	Allow. deviation	± 0,50	± 0,50		± 0,60	± 0,60	± 0,60		± 0,60
d_s	Shank diameter	2,25	2,60		2,90	3,20	3,70		4,30
	Allow. deviation	± 0,15	± 0,15		± 0,15	± 0,15	± 0,15		± 0,15
h	Head height	2,30	2,50		2,80	2,80	3,40		3,40
Drive TX		10	10	20	20	20	20	25	30
Drive PZ		1	2		2	2	2		3

Screw length l_s 2)			Standard thread length | l_{gf} = Full thread | l_{gp} =Partial thread | Tolerance: ± 2,0 3)											
Nominal length	min	max	l_{gf}	l_{gp}	l_{gf}	l_{gp}	l_{gf}	l_{gp}	l_{gf}	l_{gp}	l_{gf}	l_{gp}	l_{gf}	l_{gp}
20	l_s –1,05	l_s +1,05	16		16									
25	l_s –1,25	l_s +1,25	21	18	21	18	20	18	20					
30	l_s –1,25	l_s +1,25	26	18	26	18	25	18	25	18	24			
35	l_s –1,50	l_s +1,50	31	24	31	24	30	24	30	24	29	24	28	
40	l_s –1,50	l_s +1,50	36	28	36	28	35	28	35	28	34	28	33	28
45	l_s –1,50	l_s +1,50	41	30	41	30	40	30	40	30	39	30	38	30
50	l_s –1,50	l_s +1,50			46	30	45	30	45	30	44	30	43	30
55	l_s –1,75	l_s +1,75					50	36	50	36	49	36	48	36
60	l_s –1,75	l_s +1,75					55	36	55	36	54	36	53	36
70	l_s –1,75	l_s +1,75						42	65	42	64	42	63	42
80	l_s –1,75	l_s +1,75						45	75	45	74	45	73	45
90	l_s –2,00	l_s +2,00										54		54
100	l_s –2,00	l_s +2,00										60		60
110	l_s –2,00	l_s +2,00										70		70
120	l_s –2,00	l_s +2,00										70		70
in steps of 10mm														
130-300	l_s –3,00	l_s +3,00												70

All sizes in mm

- Screws with partial thread > 60 mm l_s with shank ribs

2) Other screw lengths with l_s min ≤ l_s ≤ l_s max and other thread lengths l_{gf} resp. l_{gp} ≥ 4xd up to max. standard thread lengths are allowed

3) For 10 mm ≤ l_{gf} resp.,l_{gp} ≤ 18 mm → tolerance ±1,5 mm and for 18 mm < l_{gf} resp. l_{gp} ≤ 30 mm → tolerance ±1,7 mm

fischer PowerFast II	**Annex A3**
Screw sizes and material	

Table A4: Screw sizes and material

PowerFast II - Self-drilling screw – Washer head with full- or partial thread

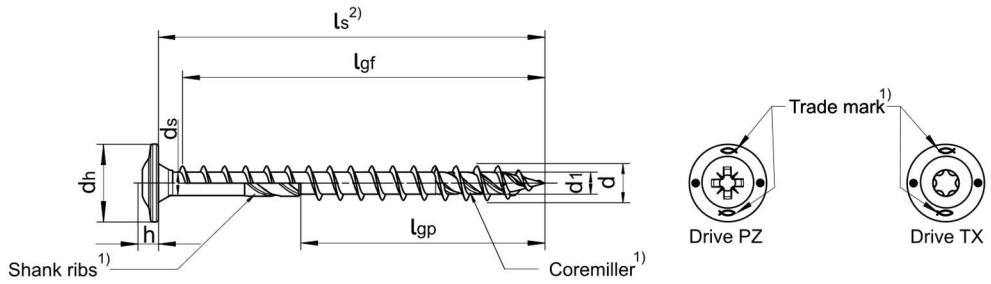

1)optional

Figure not to scale

- Carbon Steel
- Possible surface treatments: yellow zinc-plated, blue zinc-plated, blue zinc-plated ≥12µm, bonus-zinc-coated, burnished, nickel plated, brass plated

Nominal diameter		5,0		6,0
d	Outer thread diameter	5,10		6,00
	Allow. deviation	± 0,30		± 0,30
d_1	Inner thread diameter	3,25		3,95
	Allow. deviation	± 0,20		± 0,20
d_h	Head diameter	11,00		13,50
	Allow. deviation	± 1,00		± 1,00
d_s	Shank diameter	3,70		4,30
	Allow. deviation	± 0,15		± 0,15
h	Head height	3,00		3,10
Drive TX		20	25	30
Drive PZ		2		3

Screw length l_s2)			Standard thread length | l_{gf} = Full thread | l_{gp} =Partial thread | Tolerance: ± 2,0[3)]			
Nominal length	min	max	l_{gf}	l_{gp}	l_{gf}	l_{gp}
20	l_s –1,05	l_s +1,05				
25	l_s –1,25	l_s +1,25				
30	l_s –1,25	l_s +1,25	24			
35	l_s –1,50	l_s +1,50	29	24	28	
40	l_s –1,50	l_s +1,50	34	28	33	28
45	l_s –1,50	l_s +1,50	39	30	38	30
50	l_s –1,50	l_s +1,50	44	30	43	30
55	l_s –1,75	l_s +1,75	49	36	48	36
60	l_s –1,75	l_s +1,75	54	36	53	36
70	l_s –1,75	l_s +1,75	64	42	63	42
80	l_s –1,75	l_s +1,75	74	45	73	45
90	l_s –2,00	l_s +2,00		54		54
100	l_s –2,00	l_s +2,00		60		60
110	l_s –2,00	l_s +2,00		70		70
120	l_s –2,00	l_s +2,00		70		70
in steps of 10mm						
130-300	l_s –3,00	l_s +3,00				70

All sizes in mm

- Screws with partial thread > 60 mm l_s with shank ribs

2) Other screw lengths with l_s min ≤ l_s ≤ l_s max and other thread lengths l_{gf} resp. l_{gp} ≥ 4xd up to max. standard thread lengths are allowed

3) For 10 mm ≤ l_{gf} resp.,l_{gp} ≤ 18 mm → tolerance ±1,5mm and for 18 mm < l_{gf} resp. l_{gp} ≤ 30mm → tolerance ±1,7 mm

fischer PowerFast II	**Annex A4**
Screw sizes and material	

Table A5: Screw sizes and material

PowerFast II - Self-drilling screw – Step Countersunk head with full- or partial thread

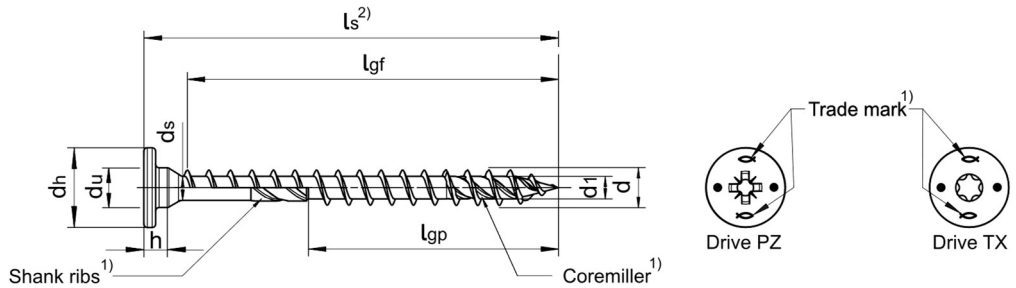

1)optional

Figure not to scale

- Carbon Steel
- Possible surface treatments: yellow zinc-plated, blue zinc-plated, blue zinc-plated ≥12µm, bonus-zinc-coated, burnished, nickel plated, brass plated

Nominal diameter		5,0		6,0
d	Outer thread diameter	5,10		6,00
	Allow. deviation	± 0,30		± 0,30
d_1	Inner thread diameter	3,25		3,95
	Allow. deviation	± 0,20		± 0,20
d_h	Head diameter	11,00		13,50
	Allow. deviation	± 1,00		± 1,00
d_u	Underhead diameter	6,40		7,50
d_s	Shank diameter	3,70		4,30
	Allow. deviation	± 0,15		± 0,15
h	Head height	3,30		4,20
Drive TX		20	25	30
Drive PZ		2		3

Screw length l_s2)			Standard thread length | l_{gf} = Full thread | l_{gp} =Partial thread | Tolerance: ± 2,0[3)]			
Nominal length	min	max	l_{gf}	l_{gp}	l_{gf}	l_{gp}
20	l_s –1,05	l_s +1,05				
25	l_s –1,25	l_s +1,25				
30	l_s –1,25	l_s +1,25	24			
35	l_s –1,50	l_s +1,50	29	24	28	
40	l_s –1,50	l_s +1,50	34	28	33	28
45	l_s –1,50	l_s +1,50	39	30	38	30
50	l_s –1,50	l_s +1,50	44	30	43	30
55	l_s –1,75	l_s +1,75	49	36	48	36
60	l_s –1,75	l_s +1,75	54	36	53	36
70	l_s –1,75	l_s +1,75	64	42	63	42
80	l_s –1,75	l_s +1,75	74	45	73	45
90	l_s –2,00	l_s +2,00		54		54
100	l_s –2,00	l_s +2,00		60		60
110	l_s –2,00	l_s +2,00		70		70
120	l_s –2,00	l_s +2,00		70		70
in steps of 10mm						
130-300	l_s –3,00	l_s +3,00				70

All sizes in mm

- Screws with partial thread > 60 mm l_s with shank ribs

2) Other screw lengths with l_s min ≤ l_s ≤ l_s max and other thread lengths l_{gf} resp. l_{gp} ≥ 4xd up to max. standard thread lengths are allowed

3) For 10 mm ≤ l_{gf} resp.,l_{gp} ≤ 18mm → tolerance ±1,5 mm and for 18 mm < l_{gf} resp. l_{gp} ≤ 30 mm → tolerance ±1,7 mm

fischer PowerFast II	**Annex A5**
Screw sizes and material	

Table A6: Screw sizes and material

PowerFast II - Self-drilling screw with clamping effect – partial/underhead thread

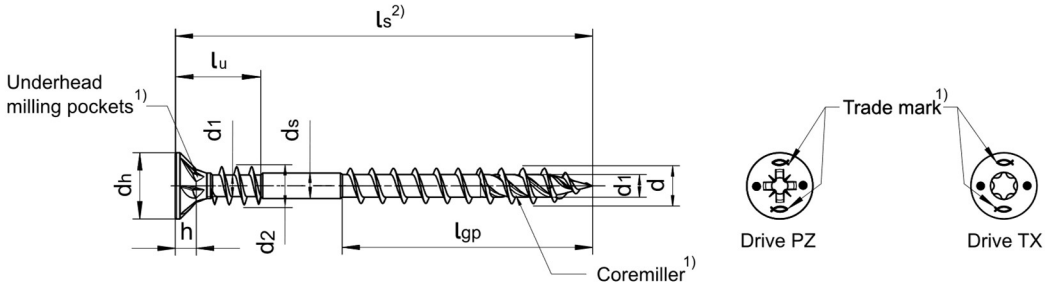

1)optional

Figure not to scale

- Carbon Steel
- Possible surface treatments: yellow zinc-plated, blue zinc-plated, blue zinc-plated ≥12µm, bonus-zinc-coated, burnished, nickel plated, brass plated

Nominal diameter		3,5	4,0	4,5
d	Outer thread diameter	3,50	4,00	4,50
	Allow. deviation	± 0,25	± 0,30	± 0,30
d_1	Inner thread diameter	2,20	2,50	2,75
	Allow. deviation	± 0,18	± 0,20	± 0,20
d_2	Outer thread diameter	4,00	4,50	5,00
	Allow. deviation	± 0,30	± 0,30	± 0,30
d_h	Head diameter	7,00	8,00	9,00
	Allow. deviation	± 0,50	± 0,60	± 0,60
d_s	Shank diameter	2,60	2,90	3,20
	Allow. deviation	± 0,15	± 0,15	± 0,15
h	Head height	2,50	2,80	2,80
Drive TX		10 / 20	20	20
Drive PZ		2	2	2

Screw length l_s2)			Standard thread length | l_d = Double thread | l_{gp} =Main thread | Tolerance: ± 2,0					
Nominal length	min	max	l_u	l_{gp}	l_u	l_{gp}	l_u	l_{gp}
20	l_s –1,05	l_s +1,05						
25	l_s –1,25	l_s +1,25						
30	l_s –1,25	l_s +1,25	10	16	10,5	16	12	
35	l_s –1,50	l_s +1,50	10	16	10,5	16	12	
40	l_s –1,50	l_s +1,50	10	24	10,5	24	12	
45	l_s –1,50	l_s +1,50	10	24	10,5	24	12	
50	l_s –1,50	l_s +1,50	10	24	10,5	24	12	24
55	l_s –1,75	l_s +1,75	10	30	10,5	30	12	30
60	l_s –1,75	l_s +1,75	10	30	10,5	30	12	30
70	l_s –1,75	l_s +1,75			10,5	30	12	30
80	l_s –1,75	l_s +1,75						
90	l_s –2,00	l_s +2,00						
100	l_s –2,00	l_s +2,00						
110	l_s –2,00	l_s +2,00						
120	l_s –2,00	l_s +2,00						
in steps of 10mm								
130-300	l_s –3,00	l_s +3,00						

All sizes in mm

2) Other screw lengths with l_s min ≤ l_s ≤ l_s max and other thread lengths l_{gp} ≥ 4xd up to max. standard thread lengths are allowed

3) For 10 mm ≤ l_d resp. l_{gp} ≤ 18 mm → tolerance ±1,5 mm and for 18 mm < l_d resp. l_{gp} ≤ 30mm → tolerance ±1,7 mm

fischer PowerFast II	**Annex A6**
Screw sizes and material	

Table A7: FAFS-Clip size and material

FAFS-Clip of adjustable frame screw

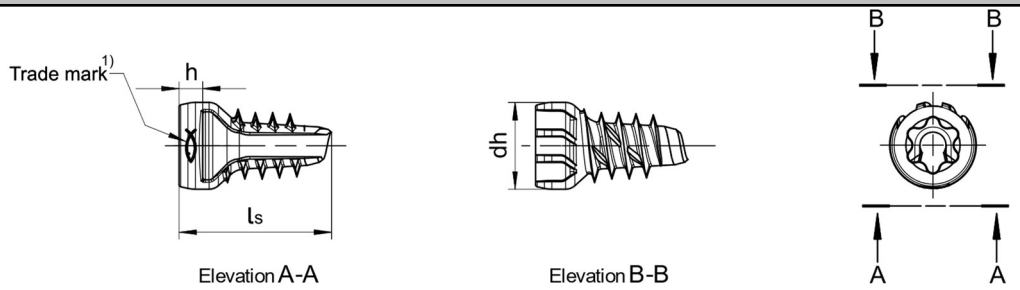

1) optional

Figure not to scale

- Zinc die-cast

Nominal diameter		5,0
l_s	Nominal length	22,0
	Allow. deviation	± 1,50
d_h	Head diameter	12,5
	Allow. deviation	± 0,62
h	Head height	3,40
	Allow. deviation	± 0,20
Drive TX		non-standard

All sizes in mm

2) Other Clip lengths with l_s min ≤ l_s ≤ l_s max and other thread lengths l_{gf} resp. l_{gp} ≥ 4 x d up to max. standard thread lengths are allowed

3) For 10 mm ≤ l_{gf} resp.,l_{gp} ≤ 18 mm → tolerance ±1,5 mm and for 18 mm < l_{gf} resp. l_{gp} ≤ 30 mm → tolerance ±1,7 mm

fischer PowerFast II	**Annex A7**
FAFS-Clip sizes and material	

Table A8: Washer sizes and material

PowerFast II - Washers

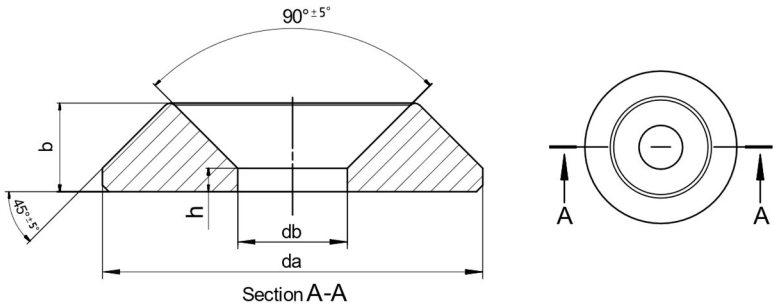

Section A-A

[1]optional

Figure not to scale

- Carbon Steel
- Possible surface treatments: yellow zinc-plated, blue zinc-plated, blue zinc-plated ≥12µm, bonus-zinc-coated, burnished, nickel plated, brass plated
- Stainless steel

Nominal diameter		6,0
da	Outer thread diameter	21,00
	Allow. deviation	± 2,0
db	Inner thread diameter	6,70
	Allow. deviation	-0,4
b	Washer Height	4,70
	Allow. deviation	-0,4
h	Washer edge Height	1,50
	Allow. deviation	0,15

All sizes in mm

fischer PowerFast II	**Annex A8**
Washer sizes and material	

Annex B: Application examples and design references
Table B1: Fixing on-roof insulation

Fixing of on-roof insulation system

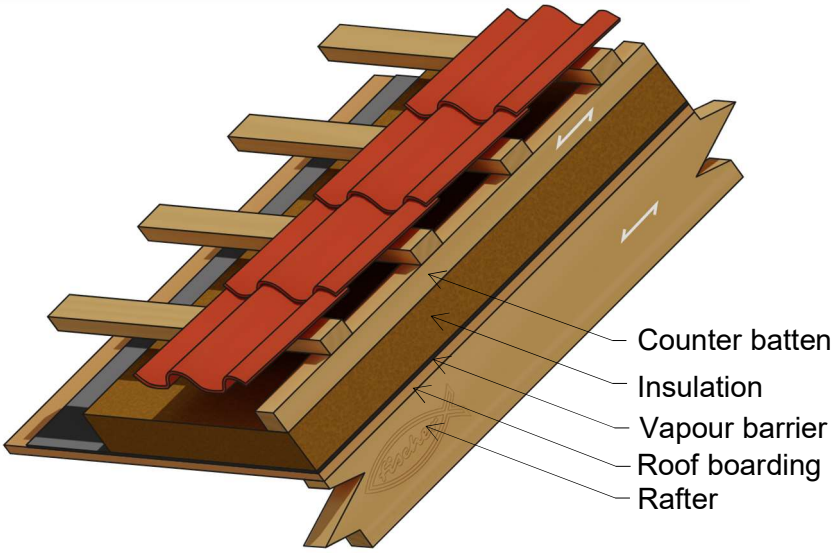

Figure not to scale

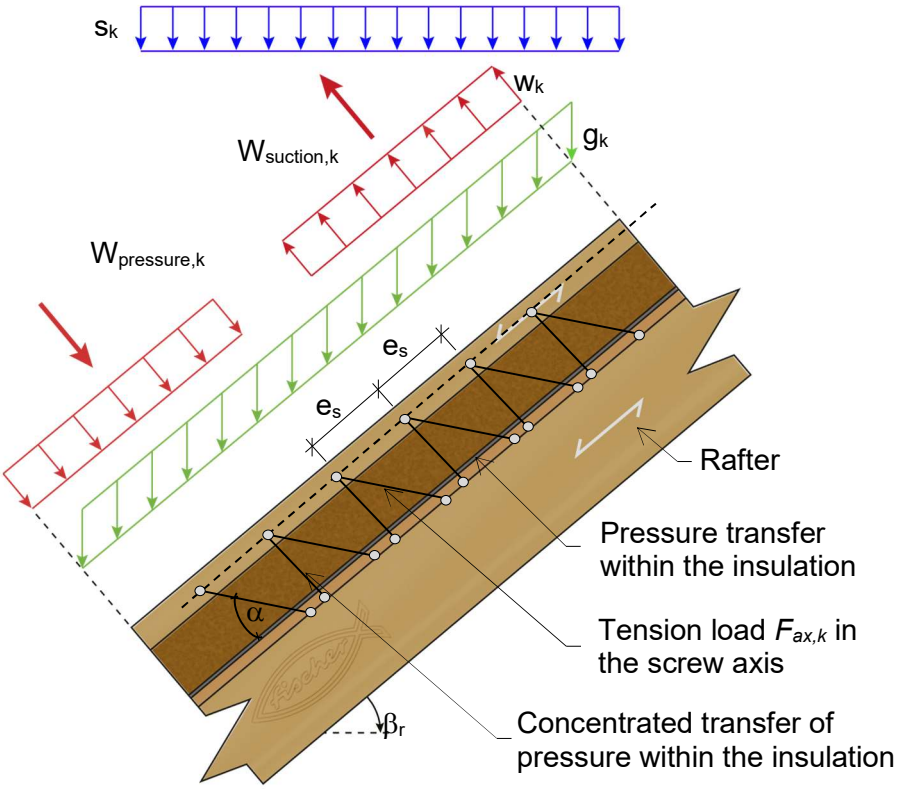

Figure not to scale

Where

β_r	Roof inclination	α	Angle between the screw axis and the grain direction of the rafter
e_s	Spacing of screws	l_{ef}	Point side penetration length of the threaded part in the rafter

fischer PowerFast II	**Annex B1**
Fixing of on-roof insulation	

Table B1.1: Fixing of on-roof insulation

Point loads F_{Ed} perpendicular to the battens[1)]

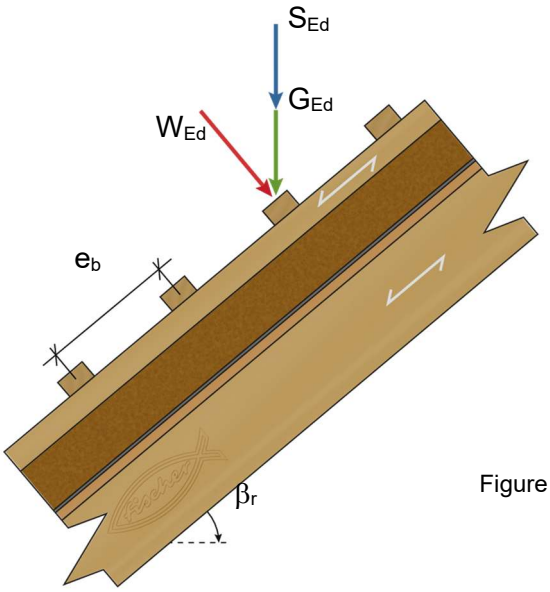

Figure not to scale

$$
\begin{aligned}
G_{Ed} &= \gamma_G \cdot g_k \cdot e_b \cdot e_r \\
S_{Ed} &= \gamma_Q \cdot s_k' \cdot e_b \cdot e_r \cdot \cos\beta_r \\
W_{Ed} &= \gamma_Q \cdot w_{pressure,k} \cdot e_b \cdot e_r \\
F_{Ed} &= W_{Ed} + (G_{Ed} + S_{Ed}) \cdot \cos\beta_r
\end{aligned}
\qquad (39)
$$

Where

F_{Ed}	Point load perpendicular to the battens [N]
G_{Ed}	Point load by dead weight [N]
S_{Ed}	Point load by snow load [N]
W_{Ed}	Point load by wind pressure [N]
e_b	Distance of the battens [mm]
e_r	Distance of the rafters [mm]
g_k	Characteristic dead load per m² roof area [N/m²]
s_k'	Characteristic snow load per m² roof area [N/m²]
$w_{pressure,k}$	Characteristic wind pressure per m² roof area [N/m²]
β_r	Roof inclination [°]
γ_G	Partial factor for permanent action acc. to EN 1990
γ_Q	Partial factor for variable action acc. to EN 1990

1) For the calculation design values have to be used

Table B1.2: Fixing of on-roof insulation

Point loads $F_{s,Ed}$ perpendicular to the battens by screws[1)]

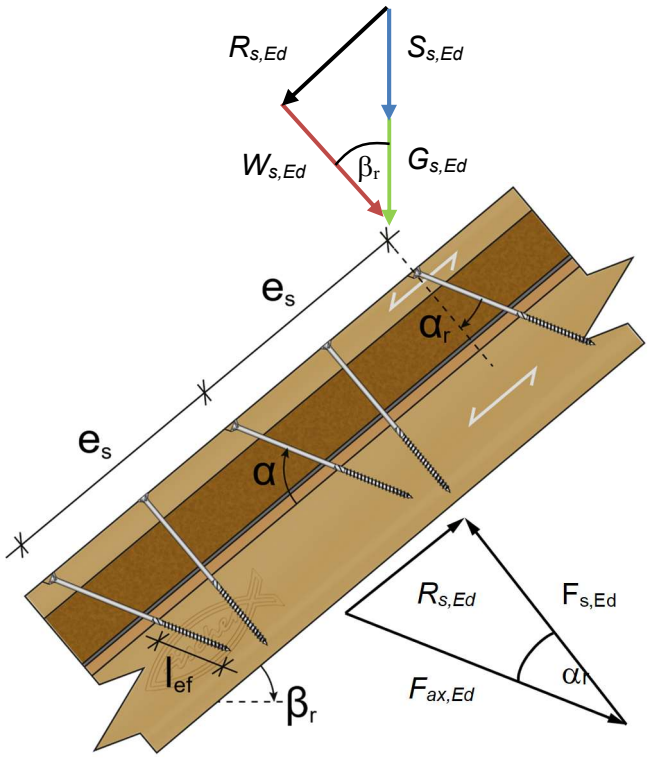

Figure not to scale

$$
\begin{aligned}
G_{s,Ed} &= \gamma_G \cdot g_k \cdot e_s \cdot e_r \\
S_{s,Ed} &= \gamma_Q \cdot s_k' \cdot e_s \cdot e_r \cdot \cos\beta_r \\
R_{s,Ed} &= \left(G_{s,Ed} + S_{s,Ed}\right) \cdot \sin\beta_r \\
F_{s,Ed} &= R_{s,Ed} / \tan\alpha_r
\end{aligned}
\qquad (40)
$$

Where

$F_{ax,Ed}$	Axial load of the screws [N]
$F_{s,Ed}$	Point loads perpendicular to the battens by screws [N]
$G_{s,Ed}$	Point load by dead weight [N]
$R_{s,Ed}$	Shear load due to dead weight and snow load [N]
$S_{s,Ed}$	Point load by snow load [N]
$W_{S,Ed}$	Point load by wind pressure [N]
e_s	Distance of the screws [mm]
e_r	Distance of the rafters [mm]
g_k	Characteristic dead load on the roof [N/m²]
s_k'	Characteristic snow load on the roof [N/m²]
α_r	Inclination of the screw axis (see figure) [°]
β_r	Roof inclination [°]
γ_G	Partial factor for permanent action acc. to EN 1990
γ_Q	Partial factor for variable action acc. to EN 1990

[1)] Design values to be used for calculation

fischer PowerFast II	**Annex B1.2**
Fixing of on-roof insulation	

Table B1.3: Fixing of on-roof insulation

Design of the battens

The bending stresses of the battens are calculated with

$$M_{Ed} = \frac{\left(F_{Ed} + F_{s,Ed}\right) \cdot l_{char}}{4} \tag{41}$$

Where

F_{Ed} Point loads perpendicular to the battens [N]
$F_{s,Ed}$ Point loads perpendicular to the battens in the area of the screw heads [N]
M_{Ed} Design bending moment of the batten [Nmm]
l_{char} Characteristic length of the batten [mm]

with $l_{char} = \sqrt[4]{\frac{4 \cdot EI}{w_{ef} \cdot K}}$, where

EI Bending stiffness of the batten [Nmm²]
w_{ef} Effective width of the thermal insulation [mm]
with $w_{ef} = w + t_{ti} / 2$, where
w Minimum width of the batten or rafter [mm]
t_{ti} Thickness of the thermal insulation [mm]
K Bedding modulus [N/mm³]
The coefficient K may be calculated from the modulus of elasticity E_{ti} and the thickness t_{ti} of the thermal insulation if the effective width w_{ef} of the thermal insulation under compression is known. Due to the load extension in the insulation the effective width w_{ef} is greater than the width of the batten or rafter, respectively. For further calculations, the effective width w_{ef} of the thermal insulation may be determined with $K = \frac{E_{ti}}{t_{ti}}$, where
E_{ti} Modulus of elasticity of the thermal insulation [N/mm²]
t_{ti} Thickness of the thermal insulation [mm]

The following conditions shall be satisfied:

$$\frac{\sigma_{m,Ed}}{f_{m,d}} \leq 1 \tag{42}$$

Where

$\sigma_{m,Ed}$ Design value of the bending stress of the batten [N/mm²]
$f_{m,d}$ Design value of the bending strength [N/mm²]

$$\frac{\tau_{Ed}}{f_{v,d}} = \frac{3 \cdot V_{Ed}}{2 \cdot A_{ef} \cdot f_{v,d}} \leq 1 \tag{43}$$

Where

$f_{v,d}$ Design value of the shear strength of the batten [N/mm²]
A_{ef} Net cross section of the batten [mm²]
V_{Ed} Design shear load onto the batten [N]

with $V_{Ed} = \frac{F_{Ed} + F_{s,Ed}}{2}$

τ_{Ed} Design value of the shear stress of the batten [N/mm²]

Table B1.4: Fixing of on-roof insulation

Design of the heat insulation
The compressive stresses in the thermal insulation shall be calculated with

$$\sigma_{c,Ed} = \frac{1{,}5 \cdot F_{Ed} + F_{s,Ed}}{2 \cdot l_{char} \cdot w_{ef}} \qquad (44)$$

Where

F_{Ed} Point loads perpendicular to the battens [N]

$F_{s,Ed}$ Point loads perpendicular to the battens in the area of the screw heads [N]

l_{char} Characteristic length of the batten [mm]

with $l_{char} = \sqrt[4]{\frac{4 \cdot EI}{w_{ef} \cdot K}}$, where

EI Bending stiffness of the batten [Nmm²]

w_{ef} Effective width of the thermal insulation [mm]

with $w_{ef} = w + t_{ti} / 2$, where

w Minimum width of the batten or rafter [mm]

t_{ti} Thickness of the thermal insulation [mm]

K Bedding modulus [N/mm³]

The coefficient K may be calculated from the modulus of elasticity E_{ti} and the thickness t_{ti} of the thermal insulation if the effective width w_{ef} of the thermal insulation under compression is known. Due to the load extension in the insulation the effective width w_{ef} is greater than the width of the batten or rafter, respectively. For further calculations, the effective width w_{ef} of the thermal insulation may be determined with $K = \frac{E_{ti}}{t_{ti}}$, where

E_{ti} Modulus of elasticity of the thermal insulation [N/mm²]

t_{ti} Thickness of the thermal insulation [mm]

$\sigma_{c,Ed}$ Design value of the compression stresses of the thermal insulation

Note: The design value of the compressive stress shall not be greater than *110* % of the compressive stress at 10 % deformation calculated according to EN 826.

Table B1.5: Fixing of on-roof insulation

Design of the screws

The screws are loaded predominantly axially. The axial tension force in the screw may be calculated from the shear loads of the roof

$$F_{ax,Ed} = \frac{R_{s,Ed}}{\cos\alpha_r} \leq F_{ax,\alpha,Rd} \qquad (45)$$

Where

$F_{ax,Ed}$	Design value of the axial tension forces onto the screw [N]
$F_{ax,\alpha,Rd}$	Design value of the withdrawal capacity of the screw [N]
$R_{s,Ed}$	Shear loads onto the screw [N]
α_r	Angle inclined screw (see figure B1.2) [°]

The load-carrying capacity of axially loaded screws is the minimum design value of the axial withdrawal capacity of the threaded part of the screw, the head pull-through capacity of the screw and the tensile capacity of the screw.

In order to limit the deformation of the screw head for heat insulation thicknesses over 200 mm or with compressive strength below *0,12* N/mm², respectively, the axial withdrawal capacity of the screws shall be reduced by the factors k_1 and k_2.

$$F_{ax,\alpha,Rd} = \min\left\{ k_{ax} \cdot f_{ax,d} \cdot d \cdot l_{ef} \cdot k_1 \cdot k_2 \cdot \left(\frac{\rho_k}{350}\right)^{0,8},\ f_{head,d} \cdot d_h^{\,2} \cdot \left(\frac{\rho_k}{350}\right)^{0,8}, f_{tens,d} \right\} \qquad (46)$$

Where

$F_{ax,\alpha,Rd}$	Design value of the withdrawal capacity of the screw [N]
d	Diameter of the screw [mm]
d_h	Head diameter of the screw [mm]
$f_{ax,d}$	Design value of the withdrawal parameter of the threaded part of the screw [N/mm²]
$f_{head,d}$	Design value of the head pull-through capacity of the screw [N/mm²]
$f_{tens,d}$	Design value of the tensile capacity of the screw [N]
k_{ax}	Coefficient according to equation (11)
k_1	$min\ \{1;\ 200 / t_{ti}\}$ [-]
k_2	$min\ \{1;\ \sigma_{10\%,Ed} / 0,12\}$ [-], where
	$\sigma_{10\%,Ed}$ Compressive stress of the heat insulation at 10 % deformation [N/mm²]
	t_{ti} Thickness of the thermal insulation [mm]
l_{ef}	Point side penetration length of the threaded part in the rafter with $l_{ef} \geq 40$ mm
α	Angle between grain and screw axis ($\alpha \geq 30°$) [°]
ρ_k	Characteristic density of the timber element [kg/m³]

Note: If in the equation for $F_{ax,Rd}$ the factors k_1 and k_2 are considered, the deflection of the battens does not need to be considered. Alternatively to the battens, panels with a minimum thickness of 20 mm from plywood according to EN 636 or an ETA or national provisions that apply at the installation site, particle board according to EN 312 or an ETA or national provisions that apply at the installation site, oriented strand board according to EN 300 or an ETA or national provisions that apply at the installation site and solid wood panels according to EN 13353 or an ETA or national provisions that apply at the installation site or Cross- laminated Timber according to an ETA may be used.

Table B1.6: Fixing of on-roof insulation

Thermal insulation material on rafters with parallel screws perpendicular to the roof plane
Alternative to the battens, panels with a minimum thickness of 20 mm from plywood according to EN 636, particleboard according to EN 312, oriented strand board OSB/3 and OSB/4 according to EN 300 or European Technical Assessment and solid wood panels according to EN 13353 may be used.

Characteristic load-carrying capacity of a screw loaded in shear:

$$F_{v,Rk} = \min \begin{cases} f_{h,b,k} \cdot d \cdot t_b \\ f_{h,r,k} \cdot d \cdot t_r \\ \dfrac{f_{h,b,k} \cdot d \cdot \beta}{1+\beta} \cdot \left(\sqrt{4t_{ti}^2 + (2+\frac{1}{\beta})t_b^2 + (2+\beta)t_r^2 + 4t_{ti}\left(t_b + t_r\right) + 2t_b t_r} - 2t_{ti} - t_b - t_r \right) + \dfrac{F_{ax,Rk}}{4} \\ 1{,}05 \cdot \dfrac{f_{h,b,k} \cdot d \cdot \beta}{\frac{1}{2}+\beta} \left(\sqrt{t_{ti}^2 + t_{ti} t_b + \frac{t_b^2}{2}\left(1+\frac{1}{\beta}\right) + \frac{M_{y,k}}{f_{h,b,k} \cdot d}\left(1+\frac{2}{\beta}\right)} - t_{ti} - \frac{t_b}{2} \right) + \dfrac{F_{ax,Rk}}{4} \\ 1{,}05 \cdot \dfrac{f_{h,b,k} \cdot d \cdot \beta}{\frac{1}{2}+\beta} \left(\sqrt{t_{ti}^2 + t_{ti} t_r + \frac{t_r^2}{2}(1+\beta) + \frac{M_{y,k}}{f_{h,b,k} \cdot d}\left(2+\frac{1}{\beta}\right)} - t_{ti} - \frac{t_r}{2} \right) + \dfrac{F_{ax,Rk}}{4} \\ 1{,}15 \cdot \dfrac{f_{h,b,k} \cdot d}{1+\beta} \left(\sqrt{\beta^2 t_{ti}^2 + 4 \cdot \beta(\beta+1) \cdot \frac{M_{y,k}}{f_{h,b,k} \cdot d}} - \beta \cdot t_{ti} \right) + \dfrac{F_{ax,Rk}}{4} \end{cases} \quad (47)$$

Where

$F_{v,RK}$	Characteristic load-carrying capacity of a screw loaded in shear [N]
$M_{y,k}$	Characteristic yield moment of the screw [Nmm]
$F_{ax,Rk}$	The minimum characteristic load-carrying capacity of the axially loaded screws acc. to EN 1995-1-1 [N]
$f_{h,b,k}$	Characteristic embedment strength of the batten [N/mm²]
$f_{h,r,k}$	Characteristic embedment strength of the rafter [N/mm²]
d	Outer thread diameter [mm]
t_b	Batten thickness [mm]
t_r	The lower value of rafter thickness or screw penetration length [mm]
t_{ti}	Thickness of the thermal insulation [mm]
β	Coefficient of the embedment strength of the rafter to the batten [-]
	with $\beta = \frac{f_{h,r,k}}{f_{h,b,k}}$

Table B2: FAFS-Clip

FAFS-Clip of adjustable frame screw
Installations of ceilings or technical shells. The FAFS- Clip may transmit axial loads (compression or tension)

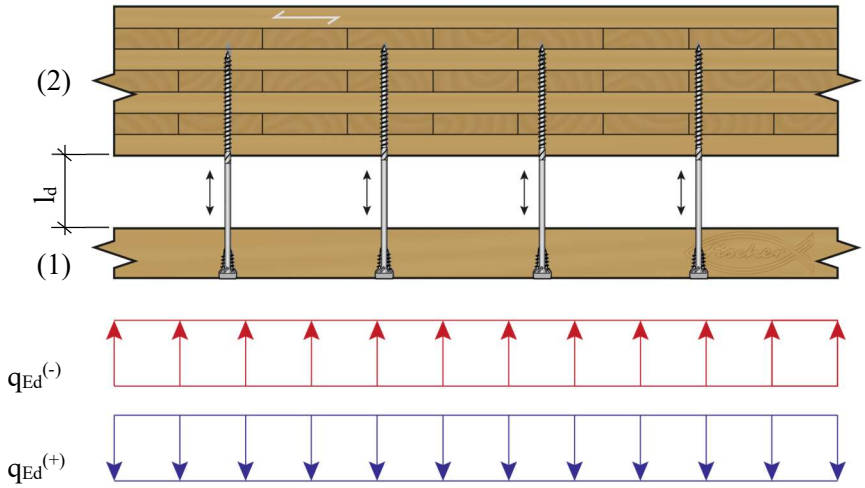

Figure not to scale

The load-carrying capacity for acting loads $q_{Ed}^{(+)}$ can be calculated like following:

$$q_{Ed}^{(+)} \cdot e \leq \min \begin{cases} F_{ax,Rd} \\ F_{FAFS,t,Rd} \end{cases} \tag{48}$$

With

$F_{ax,Rd}$ According to chapter 3.7.4 for screws in Annex A1 with d = 5,0 mm

$F_{FAFS,t,Rd}$ According to chapter 3.7.5.3 for FAFS-Clip, equation (23), (pull-through parameter)

The load carrying capacity for acting loads $q_{Ed}^{(-)}$ should be calculated like shown below

$$q_{Ed}^{(-)} \cdot e \leq \min \begin{cases} F_{ax,Rd} \\ F_{ki,Rd} \\ F_{FAFS,c,Rd} \end{cases} \tag{49}$$

With

$F_{ax,Rd}$ According to chapter 3.7.4 for screws in Annex A1 with *d = 5,0* mm

$F_{FAFS,c,Rd}$ According to chapter 3.7.5.3 for FAFS-Clip, equation (24), (push-through parameter)

and

$$F_{ki,Rd} = \kappa_c \cdot N_{pl,d} \tag{50}$$

where

$$\kappa_c = 1 \qquad \text{for } \bar{\lambda} \leq 0,2$$
$$\kappa_c = \frac{1}{k + \sqrt{k^2 - \bar{\lambda}^2}} \qquad \text{for } \bar{\lambda} > 0,2 \tag{51}$$

Table B2.1: FAFS-Clip

FAFS-Clip of adjustable frame screw

with

$$k = 0{,}5 \cdot \left[1 + 0{,}49 \cdot \left(\bar{\lambda} - 0{,}2 \right) + \bar{\lambda}^2 \right] \quad (52)$$

The relative slenderness ratio shall be calculated with

$$\bar{\lambda} = \frac{4 \cdot L_{cr}}{\pi \cdot (0{,}7 \cdot d)} \cdot \sqrt{\frac{f_{y,k}}{E_s}} \quad (53)$$

With the characteristic value for the axial capacity in case of plastic analysis referred to the diameter

$$N_{pl,k} = \frac{(0{,}7 \cdot d)^2 \cdot \pi}{4} \cdot f_{y,k} \quad (54)$$

For screws with a diameter of 5 mm, according to Annex A1

$$N_{pl,k} = 8710 \text{ N} \quad (55)$$

And the buckling length L_{cr} *on the side of the screw tip* with a minimum penetration depth of *8·d*

$$L_{cr} = 0{,}7 \cdot l_d \quad (56)$$

Where

d	Nominal diameter of the screw [mm]
e	Effective distance (supporting points) between parallel arranged screws [m]
E_s	Modulus of elasticity of the screw [N/mm²], see chapter 3.7.7
$F_{ax,Rd}$	Design withdrawal capacity of the screw in the structural timber element (2) [N], see chapter 3.7.4
$F_{FAFS,t,Rd}$	Design head pull-through capacity of the FAFS-Clip in timber part (1) for tension forces [N], see chapter 3.7.5.3
$F_{FAFS,c,Rd}$	Design head push-through capacity of the FAFS-Clip in timber part (1) for compression forces [N], see chapter 3.7.5.3
L_{cr}	Buckling length of the screw [mm]
l_d	Distance between (1) and (2) [mm]
$N_{pl,k}$	Characteristic axial capacity in case of plastic analysis [N]
$q_{Ed}^{(+)}$	Design load effecting tension loads on the installation element (1) [N/m]
$q_{Ed}^{(-)}$	Design load effecting compression loads on the installation element (1) [N/m]

Note: The compressive capacity must be modified for $f_{ax,d}$ with the factors k_{mod} and γ_M for timber according to EN 1995-1-1 while $N_{pl,d}$ the partial-factor $\gamma_{M,1}$ for steel buckling according to EN 1993-1-1 and/or national standards must be considered.

Table B3: Inclined Screws

Inclined Screws

Inclined screws with an angle of 45° for the use in single shear plane steel-to-timber shear connections

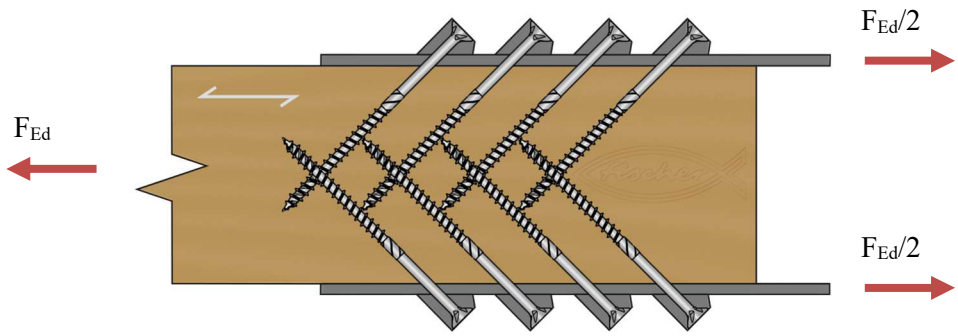

Figure not to scale

$$F_{v,Rk} = F_{ax,\alpha,Rk} \cdot (\mu \cdot \sin\alpha + \cos\alpha) + \sqrt{2 \cdot (1+\zeta)} \cdot \sqrt{M_{y,Rk} \cdot f_{h,\alpha,k} \cdot (0,7 \cdot d) \cdot \sin^2\alpha} \cdot (1 - \mu \cdot \cot\alpha) \quad (57)$$

With

Where

$F_{v,Rk}$	Characteristic load-carrying capacity of a screw each shear plane [N]
$F_{ax,\alpha,Rk}$	Withdrawal capacity of the screw [N], see chapter 3.7.4
α	Angle between screw axis and grain direction [°], α=45°
ζ	Factor to consider partial restraint of the screw head in the steel plate [0≤ ζ ≤1] $\zeta=0$ For thin steel plates $t < 1,5 \cdot d$ $\zeta=1$ For thick steel plates $t \geq 1,5 \cdot d$ *and tolerances of the diameter less than* $0,1 \cdot d$ In between a linear interpolation is allowed
$M_{y,Rk}$	Yield moment of the screw [Nmm], see chapter 3.7.3
$f_{h,\alpha',k}$	Characteristic embedment strength of the screw with an angle $\alpha' = 45$ [°]
μ	Coefficient of friction, if permanent compression forces between the steel/aluminum and timber elements can be ensured For steel and aluminum μ = 0,25

Note: For the use of inclined screws from opposite sides, the screws must overlap in the area of the screw tips to avoid a damage due to tension stress perpendicular to the grain direction.

Table B3.1: Inclined Screws

Inclined Screws

Inclined screws for the use in single timber-to-timber shear connections

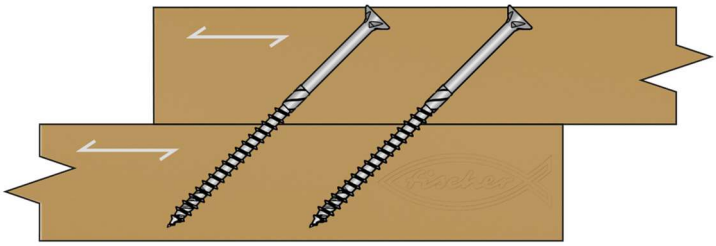

Figure not to scale

The load-carrying capacity

$$F_{v,Rk} = \frac{1}{\sqrt{\left(\frac{\cos\alpha}{F_{v,Rk}}\right)^2 + \left(\frac{\sin\alpha}{F_{ax,Rk}}\right)^2}} \tag{58}$$

The slip modulus, see also chapter 3.7.9, page 14

$$K_{ser} = K_{v,ser} \cdot \cos\alpha \cdot (\cos\alpha - \mu \cdot \sin\alpha) + K_{ax,ser} \cdot \sin\alpha \cdot (\sin\alpha + \mu \cdot \cos\alpha) \tag{59}$$

For cross coupled screws the friction should not be considered, which leads to

$$K_{ser} = K_{v,ser} \cdot \cos^2\alpha + K_{ax,ser} \cdot \sin^2\alpha \tag{60}$$

Considering the deformations in both parts leads to the total slip modulus

$$K_{v,tot,ser} = \frac{1}{\frac{1}{K_{ax,ser,1}} + \frac{1}{K_{ax,ser,2}}} \tag{61}$$

Where

d	Nominal diameter of the screw [mm]
$F_{v,Rk}$	Characteristic load-carrying capacity of a screw each shear plane [N]
$F_{ax,Rk}$	Withdrawal capacity of the screw [N], see chapter 3.7.4
$K_{ax,ser}$	Slip modulus parallel to the screw axis in the serviceability limit state
$K_{v,ser}$	Slip modulus perpendicular to the screw axis in the serviceability limit state
α	Angle between screw axis and grain direction [°]
μ	Coefficient of friction, if permanent compression forces between the timber elements can be ensured μ = *0,25*

Table B4: Fire Design

Fire Design according to EN 1995-1-2

- Connections with side members of timber elements – simplified rules

a) Unprotected connections

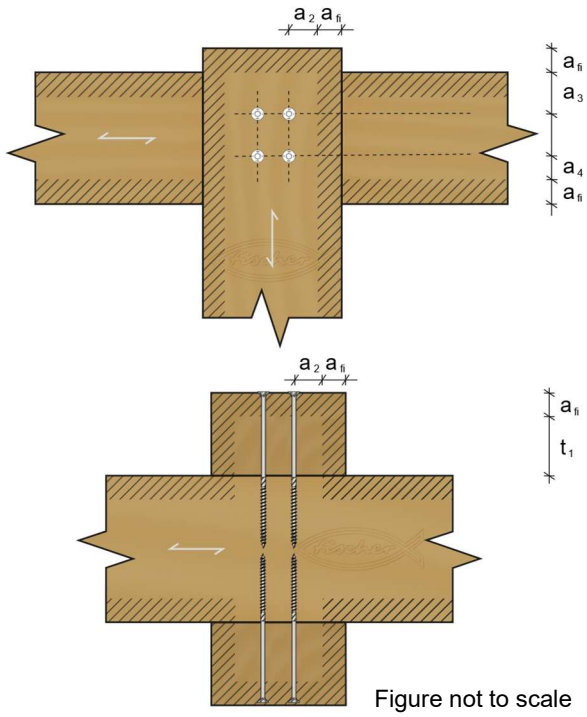

Figure not to scale

The fire resistance of unprotected timber-to-timber joints with screws with d ≥ 3,5 mm where spacing, edge and end distances and side member dimensions comply with minimum requirements given in EN 1995-1-1, section 8 have a fire resistance of

$$t_{d,fi} = 15 \text{ min} \tag{62}$$

For connections with non-protruding heads, the fire resistance periods $t_{d,fi}$ can be extended by increasing the following dimensions with a_{fi} to a maximum of 30 minutes.

- The thickness of the side members
- The width of the side members
- The end- and edge distances of the screws

With

$$a_{fi} = 1{,}5 \cdot \beta_n \cdot (t_{req} - t_{d,fi}) \tag{63}$$

Table B4.1: Fire Design

Fire Design according to EN 1995-1-2

The values for the design notional charring rate β_n under standard fire exposure are given below.

Table B4.1: Notional charring rate

Material	β_n **[mm/min]**
Softwood and beech	
Glued-Laminated Timber with a characteristic density of ≥ 290 kg/m³	0,70
Solid Timber with a characteristic density of ≥ 290 kg/m³	0,80
Hardwood	
Solid or Glued-Laminated hardwood with a characteristic density of ≥ 290 kg/m³	0,70
Solid or Glued-Laminated hardwood with a characteristic density of ≥ 450 kg/m³	0,55
LVL	
LVL with a characteristic density of ≥ 480 kg/m³	0,70

b) Protected connections

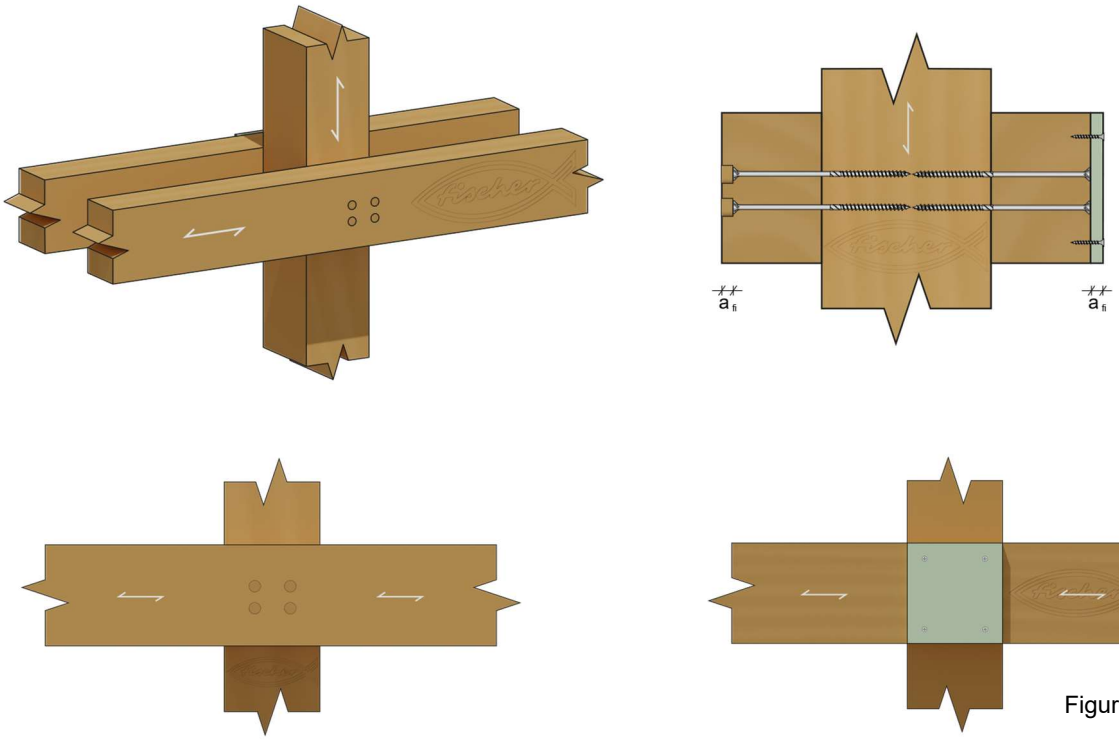

Figure not to scale

If the construction is protected by the addition of wood panelling, wood-based panels or gypsum plasterboards type *A* or *H* or other fire protection panels with a fire resistance in accordance to an European Technical Assessment, the time until start of charring should satisfy

$$t_{ch} \geq t_{req} - 0,5 \cdot t_{d,fi} \qquad (64)$$

Table B4.2: Fire Design

Fire Design according to EN 1995-1-2
If the connection is protected by the addition of gypsum plasterboard type *F*, the time until start of charring should satisfy equation (65).

$$t_{ch} \geq t_{req} - 1,2 \cdot t_{d,fi} \quad (65)$$

For connections where the screws are protected by glued-in timber plugs, the length of the plugs should be determined according to

$$a_{fi} = 1,5 \cdot \beta_n \cdot (t_{req} - t_{d,fi}) \quad (66)$$

The fixings of the additional protection should prevent its premature failure. Additional protection provided by wood-based panels or gypsum plasterboards should remain in place until charring of the member starts ($t = t_{ch}$). Additional protection provided by gypsum plasterboards type *F* should remain in place during the required fire resistance period ($t = t_{req}$).

The following rules apply for the fixing of additional protections by screws:

- The distance between the screws should be not more than 100 mm along the board edges and not more than 300 mm for fastenings within the area of the boards
- The edge distance of fasteners should be equal or greater than a_{fi}, calculated using expression

$$a_{fi} = 1,5 \cdot \beta_n \cdot (t_{req} - t_{d,fi}) \quad (67)$$

The penetration depth of the screws for fixing the additional protection made of wood, wood-based panels or gypsum plasterboards type *A* or *H* should be at least $6 \cdot d$.

For gypsum plasterboards type *F*, the penetration length into unburnt wood (that is beyond the char-line) should be at least 10 mm (see also EN 1995-1-2).

Where

a_{fi}	Extra thickness of member to improve the fire resistance [mm]
t_{req}	Required time of fire resistance [min]
$t_{d,fi}$	Time of the fire resistance of the unprotected connection [min]
β_n	Notional charring rate [mm/min]

Table B4.3: Fire Design

Fire Design according to EN 1995-1-2

- Simplified rules for axially loaded screws

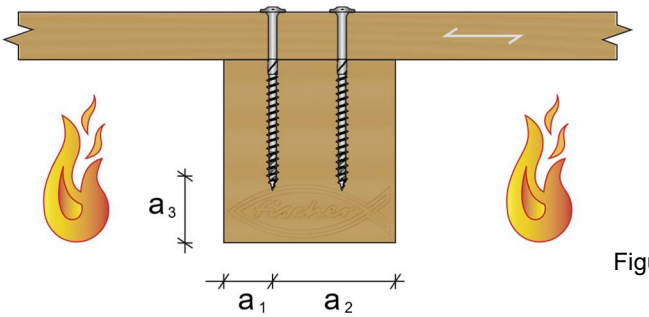

Figure not to scale

For axially loaded screws which are protected from direct fire exposure, the design resistance of the screws should be calculated like below

$$F_{ax,d,t,fi} = \eta \cdot \frac{1,05 \cdot F_{ax,Rk}}{\gamma_{M,fi}} \tag{68}$$

For connections where the distances a_2 and a_3 of the screws satisfy the equations (69), the conversion factor η for the reduction of the axial resistance of the screw in the fire situation should be calculated with equation (70).

$$\begin{aligned} a_2 &\geq a_1 + 40 \\ a_3 &\geq a_1 + 20 \end{aligned} \tag{69}$$

$$\eta = \begin{cases} 0 & \text{for } a_1 \leq 0,6 \cdot t_{d,fi} \\ \dfrac{0,44 \cdot a_1 - 0,264 \cdot t_{d,fi}}{0,2 \cdot t_{d,fi} + 5} & \text{for } 0,6 \cdot t_{d,fi} \leq a_1 \leq 0,8 \cdot t_{d,fi} + 5 \\ \dfrac{0,56 \cdot a_1 - 0,36 \cdot t_{d,fi} + 7,32}{0,2 \cdot t_{d,fi} + 23} & \text{for } 0,8 \cdot t_{d,fi} + 5 \leq a_1 \leq t_{d,fi} + 28 \\ 1,0 & \text{for } a_1 \geq t_{d,fi} + 28 \end{cases} \tag{70}$$

Where

a_1, a_2, a_3	Distances and spacing of the screws [mm]
$t_{d,fi}$	Time of the fire resistance of the unprotected connection [min]
$F_{ax,Rk}$	Characteristic withdrawal strength [N]
$F_{ax,d,t,fi}$	Design value of the withdrawal strength in the fire situation [N]
$\gamma_{M,fi}$	Partial factor for timber in the case of fire, see National regulations (recommended value $\gamma_{M,fire}$=1,0) [-]
η	Conversion factor for the reduction of the load-bearing capacity in the case of fire [-]

Table B5: Screw-Gluing

Screw-Gluing

Screw gluing methods are only allowed for the usage in serviceability class 1 and 2 according to EN 1995-1-1

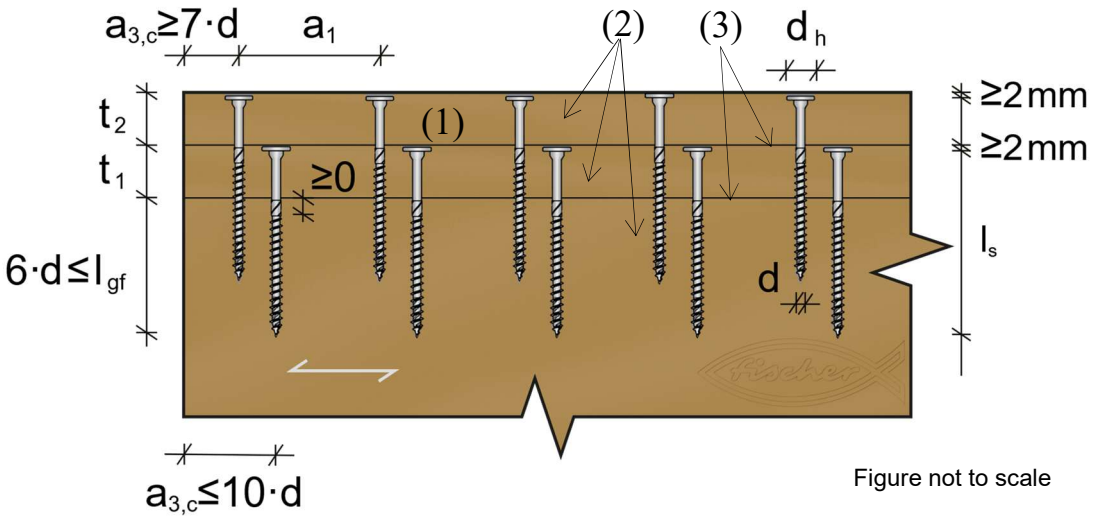

Figure not to scale

Note: The figure above is a vertical section and the distances between each screw row for assembling must be ≥a_2. For additional layers above, screws must have a distance of at least 3·d in grain direction to screw rows below. For additional information about the configuration see also figures in Annex B5.1.

Legend

(1)	fischer PowerFast II partial threaded screw	d	Nominal diameter of the screw
(2)	Bonded part	l_s	Screw length
(3)	Glue joint	l_{gf}	Threaded length (l_{gp} for partial-threaded screws)
t_1, t_2	Thickness of the gluing parts	d_h	Head diameter
a_1	Spacing of the screws parallel to the grain in a row	$a_{3,c}$	Distance of the screw to the unloaded end grain

The shown applications for screw-bonding applies only for structures in serviceability class 1 and 2 according to EN 1995-1-1. The use of an adhesive with joint filling properties is necessary. If the joint thickness of a maximum of *0,3* mm can be ensured, adhesives according to EN 15425 and adhesives type I may also be used according to EN 301. The adhesive manufacturer's instructions must be fulfilled. Only »fischer PowerFast II« screws with washer or step countersunk heads (see Annex A4 and A5) with a nominal diameter *d* ≥ *5* mm should be used.

In the use of partial-threaded screws, no part of the thread should be in the bonded part. When using fully threaded screws, the glued part must be pre-drilled with a borehole of at least *d + 1,0* mm. The upper side of the screw head or the washer, must be countersunk at least *2* mm from the surface of the glued part. The figure above shows the different options for installing the partial threaded screws of the assembling structural elements.

Table B5.1: Screw-Gluing

Screw-Gluing

The minimum spacing for connections with axially loaded screws must be observed. The maximum distance in the adhesive surface to the ends of the components must be $a_{3,c} \leq 10 \cdot d$, and to the edges $a_{4,c} \leq 5 \cdot d$. With a single-row screw connection, the rib width b_{rib} may not be larger than $d_h + 2 \cdot t_1$, otherwise a multi-row screw connection must be carried out.

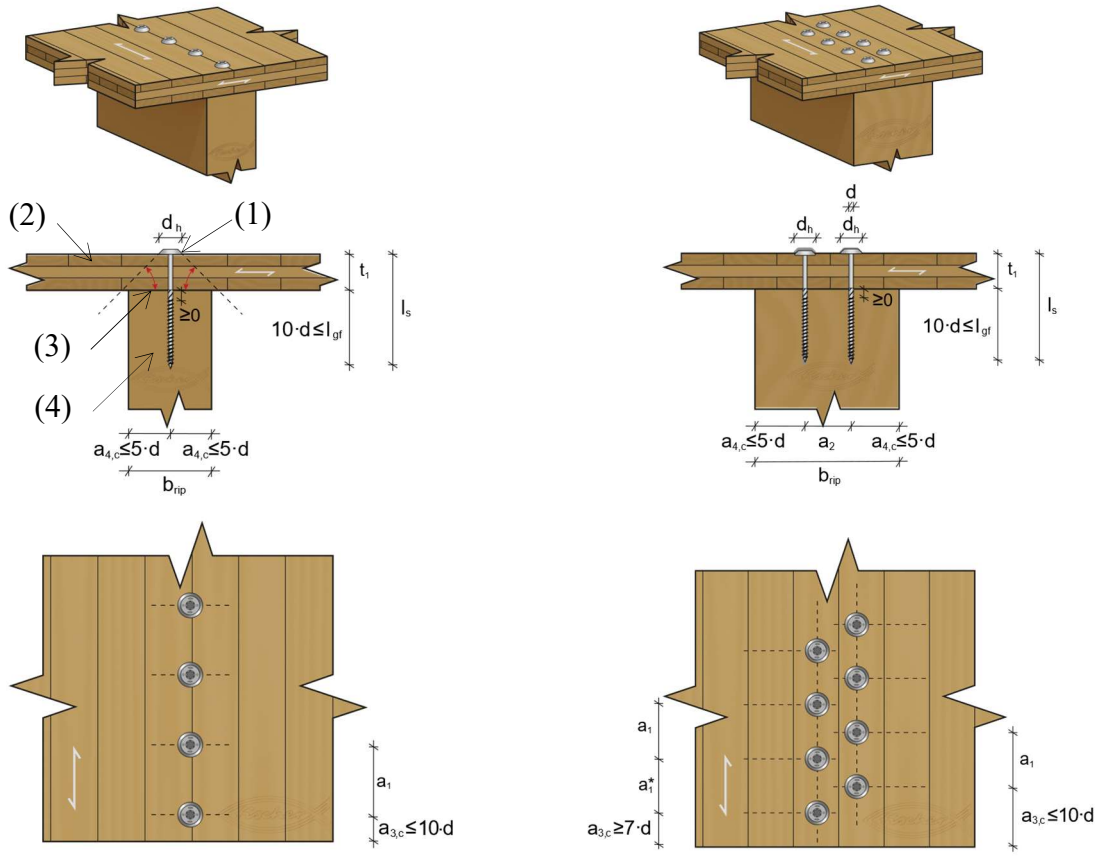

Figure not to scale

Legend

(1)	Partial threaded screw with washer		(2) Panel
(3)	Glue joint		(4) Rib (timber beam)
a_1	Spacing of the screws parallel to the grain in a row	a_1*	Reduced spacing of the screw parallel to the grain in a row to ensure a distance of $a_1/2$ between adjoining screw rows
a_2	Spacing of the screws perpendicular to the grain direction	$a_{3,c}$	Distance to the unloaded end grain
$a_{4,c}$	Distance to the unloaded edge	b_{rip}	Width of the beam web
d	Nominal diameter of the screw	d_h	Head diameter
l_s	Screw length	l_{gf}	Threaded length (l_{gp} for partial-threaded screws)
t_1	Thickness of the bonded panel		

Table B5.2: Screw-Gluing

Screw-Gluing

The surfaces of the bonded parts must be suitable for bonding and are in accordance to the requirements of the adhesive manufacturer. In general, the finishes need be sanded or smoothed planed and without coatings, dirt, dust and impurities.

The tolerance of the joint thickness of the assembling parts must fulfil the tolerances for

- Beam- and plate-shaped screw-gluing: *max. 1* mm per 1 m
- Ribbed panels: *max. 2* mm per 2 m

If several layers are glued together, each layer must be screwed-on separately. The screws must be arranged staggered (see also figure Annex B 5.1, right below), to apply enough pressure in all joints. In the intermediate layers, the screw heads should not protrude the surface of the intermediate layer.

Deformations and movements that lead to damages of the adhesive-joints have to be avoided.
The screw parameters and distances depend on the thickness of the assembling parts, given in the table below.

Table B5.2: Properties of the bonded parts, screw parameters and compressive stress

Material bonded part	Thickness bonded part [mm]	Recommended nominal diameter [mm]	Min. nominal head diameter [mm]	Maximum screw spacings: Parallel to the grain direction of the outer layer [mm]	Maximum screw spacings: Perpendicular to the grain direction of the outer layer [mm]	Length of the threaded screw part in the structural part [mm]	Calculated compressive stress $p_{cal,min}$ [N/mm²]
Beam- and panel shaped screw-gluing							
LVL of softwood, three-layered solid timber panel, OSB	*12 ≤ t < 19*	≥ *5* e.g Annex A4, A5	9,8	100	65	6·d	0,10
LVL beech				100	100	8·d	
Lamellas and one-layered solid timber panels	*19 ≤ t < 27*	≥ *6* e.g Annex A1	10,8	140	65	6·d	
LVL in spruce three-layered solid timber panel, OSB			Washer, e.g Annex A8	140	90	6·d	
LVL beech			10,8	140	140	8·d	

Table B5.3: Screw-Gluing

Screw-Gluing

As an alternative to the specifications in the table Annex B5.2, the maximum screw spacing can also be determined with the empirical equation (71).

$$a_{i,max} = 3,35 \cdot \sqrt[4]{E_{mean,i} \cdot I_{i,b=1}} \tag{71}$$

with *i* = *1* or *2*

In addition, it must be proven that the calculated minimum compressive stress per screw is observed

$$\frac{F_{ax,Rd}}{a_1 \cdot a_2} \geq p_{cal,min} \tag{72}$$

Where

$a_{i,max}$	Maximum spacing of the screws in i-direction [mm]
$I_{i,b=1}$	Moment of inertia in i-direction for a width of 1 mm of the bonded part [mm^4]
$E_{mean,i}$	Modulus of elasticity in i-direction of the bonded part [N/mm²]
$a_{i,max}$	Maximum spacing of the screws [mm]
$F_{ax,Rd}$	Design withdrawal strength of the screw [N]
$p_{cal,min}$	Minimum calculated compressive stress according to Annex B5.2

For the characteristic head pull-through parameter $f_{head,k}$ the following models can be used:

- Screws with glued parts made of solid timber and wood-based materials in softwood with

$$f_{head,k} = 14 \cdot d_h^{-0,14} \cdot \left(\frac{\rho_k}{\rho_a}\right)^{0,8} \tag{73}$$

- Screws with glued parts made of LVL in beech with

$$f_{head,k} = 25 \text{ N/mm}^2 \tag{74}$$

The decrease in the pressure until the adhesive hardens, can be taken into account in the calculation model with k_{mod} = *1,0* and γ_M = *1,3*. Table in Annex B5.2 is based on these model assumptions. After the required bond strength has been reached, the screws can be unscrewed.