DECLARACIÓN DE PRESTACIONES

DoP 0328

para el anclaje de impacto fischer Zykon FZEA II (anclaje mecánico para uso en hormigón) ES

1. Código de identificación única del producto tipo: **DoP 0328**

2. Usos previstos: **Fijación a posteriori en hormigón fisurado y no fisurado, véase el apéndice, especialmente los anexos B1 - B3.**

3. Fabricante: **fischerwerke GmbH & Co. KG, Klaus-Fischer-Str. 1, 72178 Waldachtal, Alemania**

4. Representante autorizado: **–**

5. Sistemas de evaluación y verificación de la constancia de las prestaciones (EVCP): **1**

6. Documento de evaluación europeo: **EAD 330232-01-0601, Edition 05/2021**
   Evaluación técnica europea: **ETA-06/0271; 2023-03-23**
   Organismo de evaluación técnica: **DIBt- Deutsches Institut für Bautechnik**
   Organismos notificados: **2873 TU Darmstadt**

7. Prestaciones declaradas:

Resistencia mecánica y estabilidad (BWR 1)

Resistencia característica a tracción (carga estática y cuasi-estática) Método A:
Resistencia de rotura del acero: Anexo C1
Résistance à la rupture par extraction glissement: Anexo C1
Resistencia de rotura por cono de hormigón: Anexo C1
Robustez: Anexos C1, C2
Distancia mínima entre el borde y el centro: Anexos B2, C1
Distancia al borde para evitar la rotura del acero sometido a carga: Anexo C1

Resistencia característica a cortante (carga estática y cuasi-estática), Method A:
Resistencia de rotura del acero (esfuerzo cortante): Anexo C2
Resistencia falla por arrancamiento lateral: Anexo C2

Resistencia característica para diseño simplificado:
Método B: NPD
Método C: NPD

Desplazamientos:
Desplazamiento por carga estática y cuasi-estática: Anexo C4

Resistencia y desplazamientos característicos para las categorías sísmicas C1 y C2:
Resistencia a carga de tracción, desplazamientos, categoría C1: NPD
Resistencia a carga de tracción, desplazamientos, categoría C2: NPD
Resistencia a esfuerzo cortante, desplazamientos, categoría C1: NPD
Resistencia a esfuerzo cortante, desplazamientos, categoría C2: NPD
Factor espacio anular: NPD

Seguridad en caso de incendio (BWR 2)
Reacción al fuego: Clase (A1)
Resistencia al fuego:
Resistencia al fuego, rotura del acero (carga de tracción): Anexo C3
Resistencia al fuego, a la extracción (carga de tracción): Anexo C3
Resistencia al fuego, rotura del acero (esfuerzo cortante): Anexo C3

Durabilidad:
Durabilidad: Anexos A2, B1

8. Documentación técnica adecuada o documentación técnica específica: **–**

Las prestaciones del producto identificado anteriormente son conformes con el conjunto de prestaciones declaradas. La presente declaración de prestaciones se emite, de conformidad con el Reglamento (UE) no 305/2011, bajo la sola responsabilidad del fabricante arriba identificado.

Firmado por y en nombre del fabricante por:

Dr.-Ing. Oliver Geibig, Director General Unidades de Negocio e Ingeniería

Jürgen Grün, Director General de Química y Calidad

Tumlingen, 2023-03-31

Esta DdR se ha preparado en distintos idiomas. En caso de que haya alguna controversia sobre la interpretación prevalecerá siempre la versión inglesa.

El Apéndice incluye información voluntaria y complementaria en idioma inglés que excede los requisitos legales (de idioma neutral).

Specific Part

1 Technical description of the product

The fischer Zykon-Hammerset anchor FZEA II is an anchor made of galvanised or stainless or high corrosion resistant steel which is placed in an undercut hole and anchored by mechanical interlock with displacement-controlled installation.

The product description is given in Annex A.

2 Specification of the intended use in accordance with the applicable European Assessment Document

The performances given in Section 3 are only valid if the fastener is used in compliance with the specifications and conditions given in Annex B.

The verifications and assessment methods on which this European Technical Assessment is based lead to the assumption of a working life of the fastener of at least 50 years. The indications given on the working life cannot be interpreted as a guarantee given by the producer, but are to be regarded only as a means for choosing the right products in relation to the expected economically reasonable working life of the works.

3 Performance of the product and references to the methods used for its assessment

3.1 Mechanical resistance and stability (BWR 1)

Essential characteristic	Performance
Characteristic resistance to tension load (static and quasi static loading) Method A	See Annex B2 and C1
Characteristic resistance to shear load (static and quasi static loading)	See Annex C2
Displacements	See Annex C4
Characteristic resistance and displacements for seismic performance categories C1 and C2	No performance assessed

3.2 Safety in case of fire (BWR 2)

Essential characteristic	Performance
Reaction to fire	Class A1
Resistance to fire	See Annex C3

3.3 Aspects of durability

Essential characteristic	Performance
Durability	See Annex B1

4 Assessment and verification of constancy of performance (AVCP) system applied, with reference to its legal base

In accordance with the European Assessment Document EAD 330232-01-0601 the applicable European legal act is: [96/582/EC].

The system to be applied is: 1

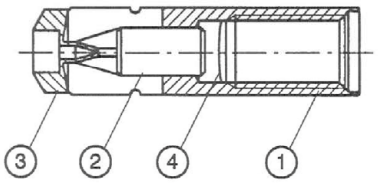

① Expansion sleeve

② Expansion pin

③ Plastic cap

④ Safety disk

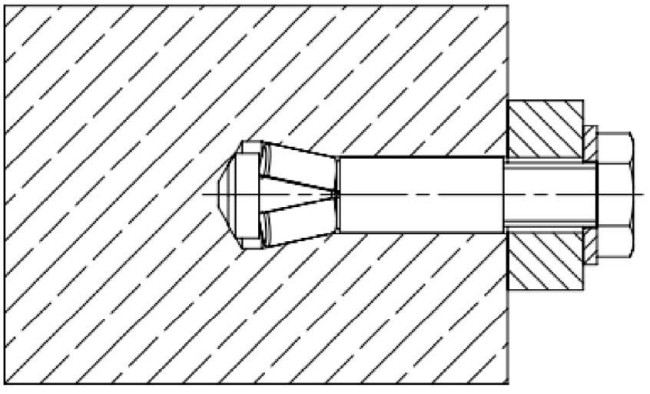

(Fig. not to scale)

fischer Zykon-Hammerset anchor FZEA II

Product description
Installed condition

Annex A 1

Marking e.g.:

⊂⊃	FZEA II 12x40	(galvanised steel)
⊂⊃	FZEA II 12x40 R	(stainless steel)
⊂⊃	FZEA II 12x40 HCR	(high corrosion resistant steel)

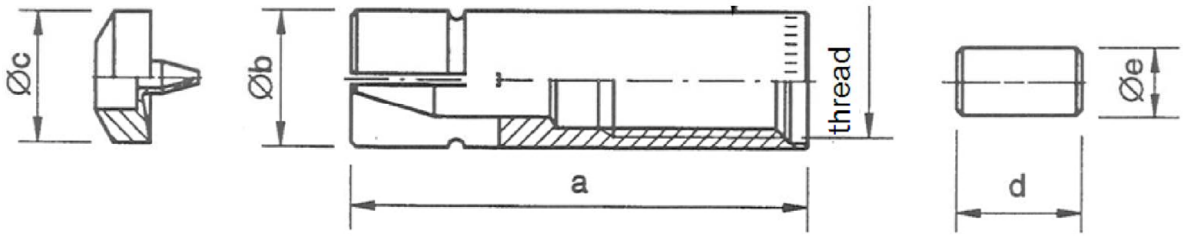

Table A2.1: Dimensions [mm]

Anchor type	thread	a [mm]	Øb [mm]	Øc [mm]	d [mm]	Øe [mm]
FZEA II 10 x 40 M8	M8	39	10	9,5	11	6,5
FZEA II 12 x 40 M10	M10		12	11,5		6,5
FZEA II 14 x 40 M12	M12		14	13,5		9,5

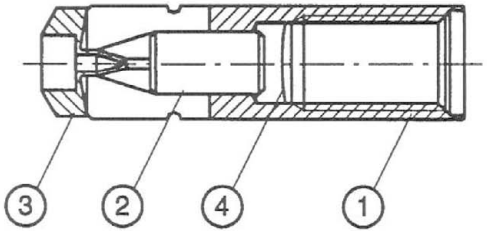

Table A2.2: Materials

Part	Designation	Material FZEA II	Material Corrosion resistance class acc. to EN 1993-1-4:2006+A1:2015 CRC III FZEA II R	 CRC V FZEA II HCR
1	Expansion sleeve	Steel, EN 10277:2018 EN ISO 4042:2022 ≥ 5 µm	Stainless steel, EN 10088:2014	High corrosion resistant steel EN 10088:2014
2	Expansion pin	Steel, EN 10277:2018 or EN 10263-1:2017 EN ISO 4042:2022 ≥ 5 µm	Stainless steel, EN 10088:2014	High corrosion resistant steel EN 10088:2014
3	Plastic cap	Plastic		
4	Safety disk	Foil		
Requirements for the fastening screw / threaded rod [1]		Steel, EN ISO 898-1:2013 EN ISO 4042:2022 ≥ 5 µm strength class ≥ 5.8	Stainless steel EN ISO 3506-1:2010 1.4401, 1.4404, 1.4578, 1.4571, 1.4439, 1.4362 strength class ≥ 50	High corrosion resistant steel EN ISO 3506-1:2020 1.4529, 1.4565 strength class ≥ 50

[1] The length of the fastening screw shall be determined depending on the thickness of the fixture t_{fix}, admissible tolerances, existing thread length (= maximum screwing depth) and minimum screwing depth (according to Table B2). Washers and screws or threaded rods with hexagon nuts are not included in the scope of delivery

(Fig. not to scale)

fischer Zykon-Hammerset anchor FZEA II

Product description
Anchor types and dimensions
Materials

Annex A 2

Specifications of intended use

Anchorages subject to:

- Static and quasi-static loads
- Fire exposure

Base materials:

- Compacted reinforced or unreinforced normal weight concrete without fibres (cracked and uncracked) of strength classes C20/25 to C50/60 according to EN 206:2013+A2:2021

Use conditions (Environmental conditions):

- Structures subject to dry internal conditions: **FZEA II**
- For all other conditions according to EN 1993-1-4:2006+A1:2015 corresponding to corrosion resistance class: **- CRC III** **FZEA II R**
  - CRC V **FZEA II HCR**

Design:

- Anchorages are designed under the responsibility of an engineer experienced in anchorages and concrete work.
- Verifiable calculation notes and drawings are prepared taking account of the loads to be anchored. The position of the anchor is indicated on the design drawings (e.g. position of the anchor relative to reinforcement or to supports, etc.)
- Design of fastenings according to EN 1992-4:2018 and EOTA Technical Report TR 055, Edition February 2018

Installation:

- Anchor installation carried out by appropriately qualified personnel and under the supervision of the person responsible for technical matters of the site
- Correct installation is ensured when front face of sleeve is approximately 1 mm below the concrete surface and the control mark on the sleeve is visible as illustrated in Annex B2

Description installation control
plan view A-A

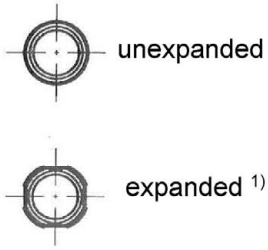

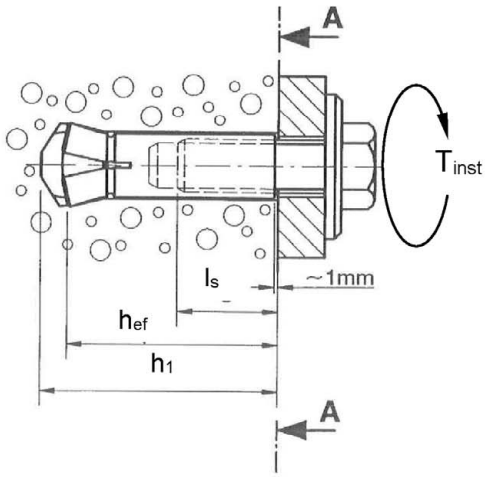

h_{ef} = Effecitve anchorage depth
l_s = Screw-in depth
h_1 = Drill hole depth
T_{inst} = Max. installation torque

1) By setting the anchor with the machine setting tool stop the rotation, otherwise a round flange is formed instead of the notch

Table B2.1: Installation tools

Anchor type	**FZEA II 10x40 M8**	**FZEA II 12x40 M10**	**FZEA II 14x40 M12**
Zykon-Universal drill 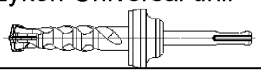	FZUB 10x40	FZUB 12x40	FZUB 14x40
Zykon Impact thorn 	FZED 10 plus	FZED 12 plus	FZED 14 plus
Machine setting tool 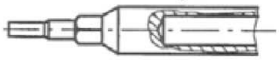	FZEM 10x40	FZEM 12x40	FZEM 14x40

Table B2.2: Installation parameters

Anchor type	Drill hole depth h_1 [mm]	Anchorage depth h_{ef} [mm]	Fastening screw or threaded rod: Max. installation torque $T_{inst.}$ [Nm]		Screw-in depth l_s [mm]	
			FZEA II	FZEA II R FZEA II HCR	max	min
FZEA II 10 x 40 M8	43	40	≤ 10	≤ 15	17	11
FZEA II 12 x 40 M10	43	40	≤ 15	≤ 20	19	13
FZEA II 14 x 40 M12	43	40	≤ 20	≤ 40	21	15

Table B2.3: Minimum thickness of concrete members, minimum spacing and minimum edge distance

Anchor type and size			**FZEA II 10x40 M8**	**FZEA II 12x40 M10**	**FZEA II 14x40 M12**
Minimum thickness of concrete member	h_{min}	[mm]	80	80	80
Minimum spacing	s_{min}		40	45	50
Minimum edge distance	c_{min}		40	45	50

(Fig. not to scale)

fischer Zykon-Hammerset anchor FZEA II

Intended Use
Installation tools, Installation and anchor parameters
Minimum thickness of concrete members, minimum spacing and minimum edge distance

Annex B 2

Installation instructions

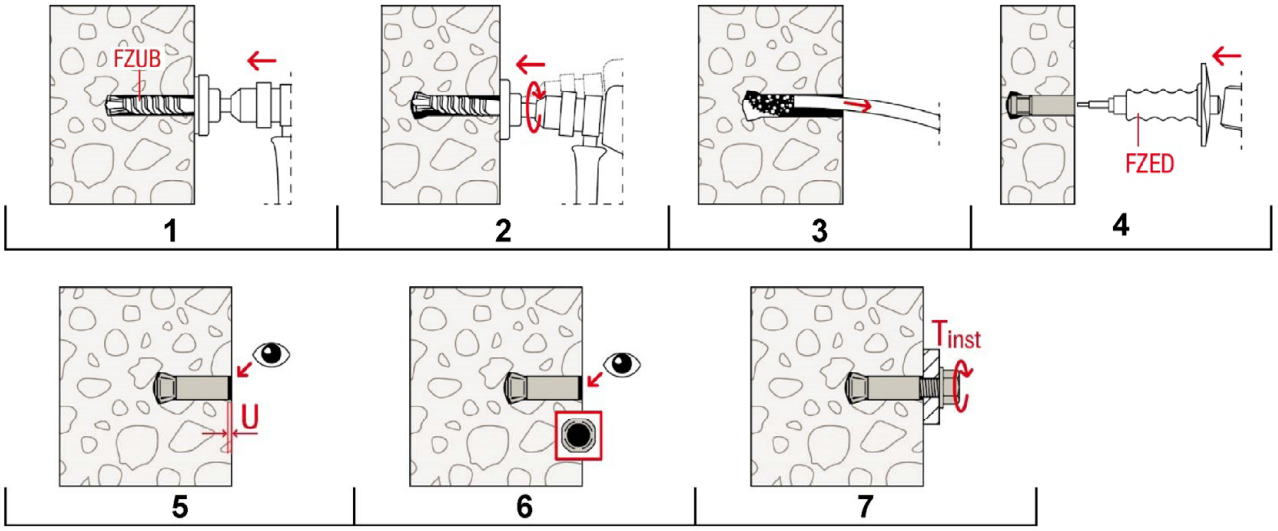

No.	Description
1	Drill a hole perpendicular (+/- 5°) to the surface of the anchor base with a hammer drill, using the corresponding Zykon universal drill bit FZUB. The required drill depth is reached once the FZUB depth stop meets the concrete.
2	Once the FZUB depth stop meets the concrete, create the drill hole undercut by making circular swiveling movements with the hammer drill while the hammer mechanism is engaged. Press the hammer drill firmly against the anchor base: 2-3 swiveling movements are sufficient
3	Clean bore hole
4	Drive in the pin with the setting tool FZED
5	Check if the sleeve is under the concrete surface (U ≈ 1mm)
6	Check of the setting notch for correct installation
7	Apply T_{inst}

Table C1.1: Characteristic values of **tension** resistance under static and quasi-static action

Type of anchor			FZEA II 10x40 M8	FZEA II 12x40 M10	FZEA II 14x40 M12
Steel failure – decisive values of sleeve and screw / threaded rod					
Characteristic resistance **FZEA II** Strength class ≥ 5.8 [1]	$N_{Rk,s}$	[kN]	9,6	17,0	19,7
Partial factor	γ_{Ms}	[-]	1,5		
Characteristic resistance **FZEA II R, FZEA II HCR** Strength class 50 [1]	$N_{Rk,s}$	[kN]	18,3	29,0	42,2
Partial factor	γ_{Ms}	[-]	2,86		
Characteristic resistance **FZEA II R, FZEA II HCR** Strength class ≥ 70 [1]	$N_{Rk,s}$	[kN]	12,2	21,6	25,0
Partial factor	γ_{Ms}	[-]	1,5		
Pullout failure					
Characteristic resistance in cracked concrete C20/25	$N_{Rk,p}$	[kN]	4,0	7,5	9,0
Characteristic resistance in uncracked concrete C20/25	$N_{Rk,p}$	[kN]	9,0	9,0	9,0
Increasing factors for $N_{Rk,p}$ $N_{Rk,p} = \psi_c \cdot N_{Rk,p}$ (C20/25)	ψ_c [-]	C25/30	1,12		
		C30/37	1,22		
		C35/45	1,32		
		C40/50	1,41		
		C45/55	1,50		
		C50/60	1,58		
Installation safety factor	γ_{inst}	[-]	1,2		
Concrete cone failure					
Effective anchorage depth	h_{ef}	[mm]	40	40	40
Factor for uncracked concrete	k_{ucr}	[-]	11,0		
Factor for cracked concrete	k_{cr}	[-]	7,7		
Minimal member thickness	h_{min}	[mm]	80	80	80
Spacing	$s_{cr,N}$	[mm]	120	120	120
Edge distance	$c_{cr,N}$	[mm]	60	60	60
Spacing (splitting)	$s_{cr,sp}$	[mm]	170	170	170
Edge distance (splitting)	$c_{cr,sp}$	[mm]	85	85	85
Characteristic resistance to splitting	$N^0_{Rk,sp}$	[kN]	min {$N^0_{Rk,c}$; $N_{Rk,p}$} [2]		

[1] Strength class of the screw / threaded rod
[2] $N^0_{Rk,c}$ acc. to EN 1992-4:2018

Table C2.1: Characteristic values of **shear** resistance under static and quasi-static action

Type of anchor			FZEA II 10x40 M8	FZEA II 12x40 M10	FZEA II 14x40 M12
Steel failure without lever arm - decisive values of sleeve and screw / threaded rod					
Characteristic resistance **FZEA II** Strength class ≥ 5.8 [1]	$V^0_{Rk,s}$	[kN]	8,3	13,6	19,1
Partial factor	γ_{Ms}	[-]	1,25		
Characteristic resistance **FZEA II R, FZEA II HCR** Strength class 50 [1]	$V^0_{Rk,s}$	[kN]	9,2	14,5	21,1
Partial factor	γ_{Ms}	[-]	2,38		
Characteristic resistance **FZEA II R, FZEA II HCR** Strength class ≥ 70 [1]	$V^0_{Rk,s}$	[kN]	10,0	15,0	20,6
Partial factor	γ_{Ms}	[-]	1,25		
Factor for ductility	k_7	[-]	1,0		
Steel failure with lever arm - decisive values of sleeve and screw / threaded rod					
Characteristic resistance **FZEA II** Strength class ≥ 5.8 [1]	$M^0_{Rk,s}$	[Nm]	15,0	23,0	31,0
Partial factor	γ_{Ms}	[-]	1,25		
Characteristic resistance **FZEA II C, FZEA II HCR** [1] Strength class 50 [1]	$M^0_{Rk,s}$	[Nm]	18,7	37,4	65,5
Partial factor	γ_{Ms}	[-]	2,38		
Characteristic resistance **FZEA II C, FZEA II HCR** Strength class ≥ 70 [1]	$M^0_{Rk,s}$	[Nm]	19,0	29,0	39,0
Partial factor	γ_{Ms}	[-]	1,25		
Factor for ductility	k_7	[-]	1,0		
Concrete pryout failure					
Factor for pryout failure	k_8	[-]	1,3		
Concrete edge failure					
Effective length of anchor for shear loading	l_f	[mm]	40	40	40
Effective diameter of anchor	d_{nom}	[mm]	10	12	14
Installation safety factor	γ_{inst}	[-]	1,0		

[1] Strength class of the screw / threaded rod

Table C3.1: Characteristic values of **tension** resistance under **fire exposure**

	R30 Fire resistance 30 minutes			**R60** Fire resistance 60 minutes		
	$N_{Rk,s,fi,30}$ [kN]	$N_{Rk,p,fi,30}$ [kN]	$N^0_{Rk,c,fi,30}$ [kN]	$N_{Rk,s,fi,60}$ [kN]	$N_{Rk,p,fi,60}$ [kN]	$N^0_{Rk,c,fi,60}$ [kN]
FZEA II 10x40 M8, R, HCR	1,1	1,0	1,8	0,9	1,0	1,8
FZEA II 12x40 M10, R, HCR	3,2	1,9	1,8	2,4	1,9	1,8
FZEA II 14x40 M12, R, HCR	4,7	2,3	1,8	3,5	2,3	1,8

	R90 Fire resistance 90 minutes			**R120** Fire resistance 120 minutes		
	$N_{Rk,s,fi,90}$ [kN]	$N_{Rk,p,fi,90}$ [kN]	$N^0_{Rk,c,fi,90}$ [kN]	$N_{Rk,s,fi,120}$ [kN]	$N_{Rk,p,fi,120}$ [kN]	$N^0_{Rk,c,fi,120}$ [kN]
FZEA II 10x40 M8, R, HCR	0,8	1,0	1,8	0,7	0,8	1,5
FZEA II 12x40 M10, R, HCR	1,6	1,9	1,8	1,2	1,5	1,5
FZEA II 14x40 M12, R, HCR	2,3	2,3	1,8	1,8	1,8	1,5

Table C3.2: Characteristic values of **shear** resistance under **fire exposure**

	R30 Fire resistance 30 minutes		**R60** Fire resistance 60 minutes	
	$V_{Rk,s,fi,30}$ [kN]	$M^0_{Rk,s,fi,30}$ [Nm]	$V_{Rk,s,fi,60}$ [kN]	$M^0_{Rk,s,fi,60}$ [Nm]
FZEA II 10x40 M8, R, HCR	0,9	1,1	0,8	0,9
FZEA II 12x40 M10, R, HCR	2,3	4,1	1,7	3,1
FZEA II 14x40 M12, R, HCR	2,8	7,3	2,1	5,4

	R90 Fire resistance 90 minutes		**R120** Fire resistance 120 minutes	
	$V_{Rk,s,fi,90}$ [kN]	$M^0_{Rk,s,fi,90}$ [Nm]	$V_{Rk,s,fi,120}$ [kN]	$M^0_{Rk,s,fi,120}$ [Nm]
FZEA II 10x40 M8, R, HCR	0,7	0,8	0,6	0,7
FZEA II 12x40 M10, R, HCR	1,1	2,1	0,9	1,5
FZEA II 14x40 M12, R, HCR	1,4	3,6	1,0	2,7

Concrete pryout failure according to EN 1992-4:2018

Table C3.3: Minimum spacings and minimum edge distances under fire exposure

Type of anchor			**FZEA II 10x40 M8**	**FZEA II 12x40 M10**	**FZEA II 14x40 M12**
Edge distance[1)]	$c_{cr,fi}$	[mm]	$2\ h_{ef}$		
	$c_{min,fi}$		40	45	50
Spacing	$s_{cr,fi}$		$2\ c_{cr,fi}$		
	$s_{min,fi}$		40	45	50

[1)] For fire exposure from more than one side $c_{min} \geq 300$ mm

fischer Zykon-Hammerset anchor FZEA II

Performances
Characteristic values of resistance under tension and shear loads under fire exposure

Annex C 3

Table C4.1: Displacements under **tension** load

Type of anchor			FZEA II 10x40 M8	FZEA II 12x40 M10	FZEA II 14x40 M12
Tension load in cracked concrete	N	[kN]	1,56	2,93	3,50
Displacement	δ_{N0}	[mm]	1,3		
	$\delta_{N\infty}$		1,4		
Tension load in uncracked concrete	N	[kN]	3,52		
Displacement	δ_{N0}	[mm]	1,3		
	$\delta_{N\infty}$		1,4		

Table C4.2: Displacements under **shear** load

Type of anchor			FZEA II 10x40 M8	FZEA II 12x40 M10	FZEA II 14x40 M12
Shear load in cracked an uncracked concrete, **FZEA II**	V	[kN]	4,7	7,6	10,7
Displacement	δ_{V0}	[mm]	1,3	1,8	2,0
	$\delta_{V\infty}$		1,9	2,6	3,0
Shear load in cracked an uncracked concrete, **FZEA II R, FZEA II HCR**	V	[kN]	5,6	8,4	11,6
Displacement	δ_{V0}	[mm]	1,8	2,0	2,0
	$\delta_{V\infty}$		2,7	3,0	3,0