DECLARACIÓN DE PRESTACIONES

DoP 0318

para el sistema de inyección fischer FIS AB (Anclaje químico para uso en mampostería) ES

1. Código de identificación única del producto tipo: **DoP 0318**

2. Usos previstos: **Fijación a posteriori en mampostería. Véase el apéndice, especialmente los anexos B1 - B13.**

3. Fabricante: **fischerwerke GmbH & Co. KG, Otto-Hahn-Straße 15, 79211 Denzlingen, Alemania**

4. Representante autorizado: **–**

5. Sistemas de evaluación y verificación de la constancia de las prestaciones (EVCP): **1**

6. Documento de evaluación europeo: **EAD 330076-00-0604, Edition 11/2017**
   Evaluación técnica europea: **ETA-17/0352; 2022-08-18**
   Organismo de evaluación técnica: **DIBt- Deutsches Institut für Bautechnik**
   Organismos notificados: **2873 TU Darmstadt**

7. Prestaciones declaradas:

Resistencia mecánica y estabilidad (BWR 1)

Valores característicos de resistencia:

Factor de reducción: Anexo C33

Resistencia característica a tracción de un anclaje aislado: Véase el apéndice, especialmente los anexos B3, C1, C3, C5, C7, C9, C11, C13, C15, C17, C19, C21, C23, C25, C27, C29, C32

Resistencia característica a tracción de un grupo de anclajes: Anexo B13

Resistencia característica a cortante de un anclaje aislado: Véase el apéndice, especialmente los anexos B3, C2, C3, C5, C7, C9, C11, C13, C15, C17, C19, C21, C23, C25, C27, C29, C32

Resistencia característica a cortante de un grupo de anclajes con y sin influencia del borde: Anexo B13

Distancia característica al borde y entre ejes: Véase el apéndice, especialmente los anexos B13, C4, C6, C8, C10, C12, C14, C16, C18, C20, C22, C24, C26, C28, C30

Distancia mínima al borde y entre ejes: Véase el apéndice, especialmente los anexos B13, C4, C6, C8, C10, C12, C14, C16, C18, C20, C22, C24, C26, C28, C30

Factor de grupo de anclajes bajo cargas a tracción y a cortante: Véase el apéndice, especialmente los anexos B13, C4, C6, C8, C10, C12, C14, C16, C18, C20, C22, C24, C26, C28, C31

Espesor mínimo de la base de anclaje: Anexo B2

Durabilidad: Anexos A5, B2

Desplazamientos: Anexo C33

Seguridad en caso de incendio (BWR 2)

Reacción al fuego: Clase (A1)

Higiene, salud y medio ambiente (BWR 3)

Contenido, emisión y/o desprendimiento de sustancias peligrosas: NPD

8. Documentación técnica adecuada o documentación técnica específica: **–**

Las prestaciones del producto identificado anteriormente son conformes con el conjunto de prestaciones declaradas. La presente declaración de prestaciones se emite, de conformidad con el Reglamento (UE) no 305/2011, bajo la sola responsabilidad del fabricante arriba identificado.

Firmado por y en nombre del fabricante por:

Dr. Oliver Geibig, Director General Unidades de Negocio e Ingeniería

Jürgen Grün, Director General de Química y Calidad

Tumlingen, 2022-10-18

Esta DdR se ha preparado en distintos idiomas. En caso de que haya alguna controversia sobre la interpretación prevalecerá siempre la versión inglesa.

El Apéndice incluye información voluntaria y complementaria en idioma inglés que excede los requisitos legales (de idioma neutral).

Specific Part

1 Technical description of the product

The fischer Injection system FIS AB for masonry is a bonded anchor (injection type) consisting of a mortar cartridge with fischer injection mortar FIS AB, FIS AB Low Speed or FIS AB High Speed, a perforated sleeve FIS H K and an anchor rod with hexagon nut and washer or an internal threaded achor FIS E. The steel elements are made of zinc coated steel, stainless steel or high corrosion resistant steel.

The anchor rod is placed into a drilled hole filled with injection mortar and is anchored via the bond between steel element, injection mortar and masonry and mechanical interlock.

The product description is given in Annex A.

2 Specification of the intended use in accordance with the applicable European Assessment Document

The performances given in Section 3 are only valid if the anchor is used in compliance with the specifications and conditions given in Annex B.

The verifications and assessment methods on which this European Technical Assessment is based lead to the assumption of a working life of the anchor of at least 50 years. The indications given on the working life cannot be interpreted as a guarantee given by the producer, but are to be regarded only as a means for choosing the right products in relation to the expected economically reasonable working life of the works.

3 Performance of the product and references to the methods used for its assessment

3.1 Mechanical resistance and stability (BWR 1)

Essential characteristic	Performance
Characteristic values for resistance	See Annexes B 13, C 1 to C 33
Displacements	See Annex C 33
Durability	See annex B 2

3.2 Safety in case of fire (BWR 2)

Essential characteristic	Performance
Reaction to fire	Class A1

3.3 Hygiene, health and the environment (BWR 3)

Essential characteristic	Performance
Content, emission and/or release of dangerous substances	No performance assessed

4 Assessment and verification of constancy of performance (AVCP) system applied, with reference to its legal base

In accordance with the European Assessment Document EAD 330076-00-0604 the applicable European legal act is: [97/177/EC].

The system to be applied is: 1

Installation conditions part 1

Anchor rods with perforated sleeve FIS H K; Installation in perforated and solid brick masonry

Pre-positioned anchorage:

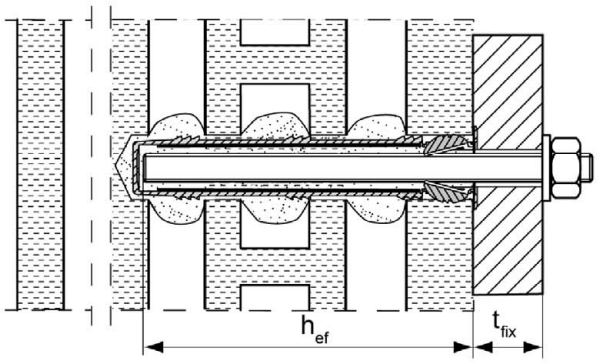

Installation with render bridge

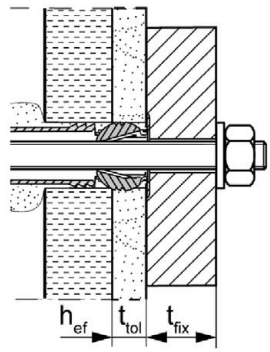

Size of the perforated sleeve:	FIS H 12x85 K FIS H 16x85 K	FIS H 16x130 K FIS H 20x85 K	FIS H 20x130 K FIS H 20x200 K

Internal threaded anchor FIS E with perforated sleeve FIS H K;
Installation in perforated and solid brick masonry

Pre-positioned anchorage:

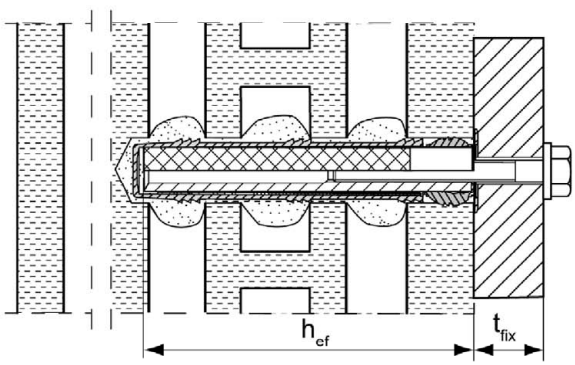

Figures not to scale

h_{ef} = effective anchorage depth

t_{fix} = thickness of fixture

t_{tol} = thickness of unbearing layer (e.g. plaster)

Installation conditions part 2

Anchor rods without perforated sleeve FIS H K;
installation in solid brick masonry and autoclaved aerated concrete

Pre-positioned anchorage:

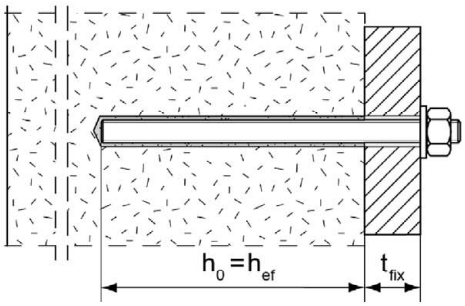

Push through anchorage: Annular gap filled with mortar

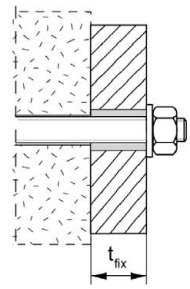

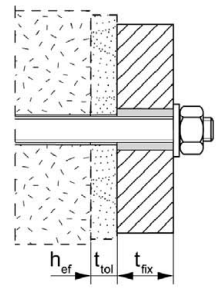

Installation with render bridge

Internal threaded anchors FIS E without perforated sleeve FIS H K; installation in solid brick masonry and autoclaved aerated concrete

Pre-positioned anchorage:

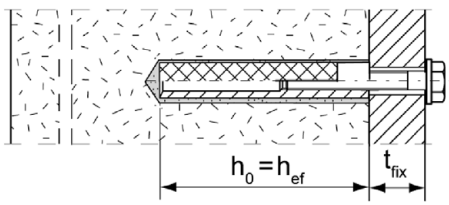

Installation with render bridge

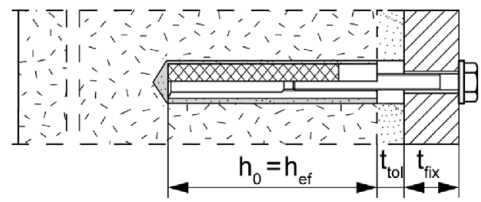

Figures not to scale

h_0 = depth of drill hole

h_{ef} = effective anchorage depth

t_{tol} = thickness of unbearing layer (e.g. plaster)

t_{fix} = thickness of fixture

Overview system components part 1

Mortar cartridge (shuttle cartridge) with sealing cap

1

Sizes: 360 ml, 825 ml

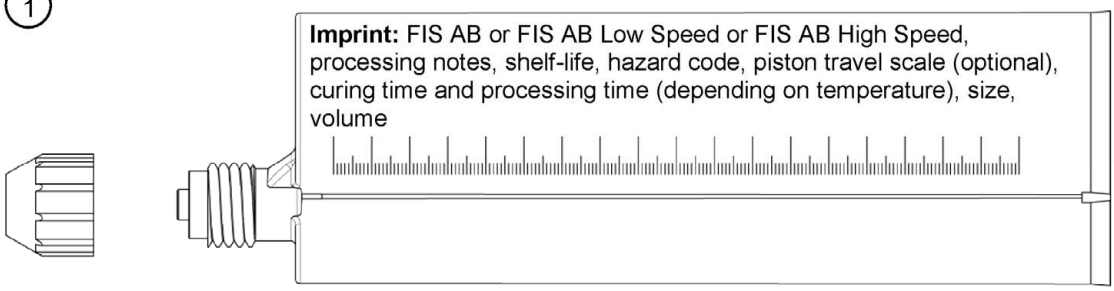

Mortar cartridge (coaxial cartridge) with sealing cap

1

Sizes: 100 ml, 150 ml, 300 ml, 380 ml, 400 ml, 410 ml

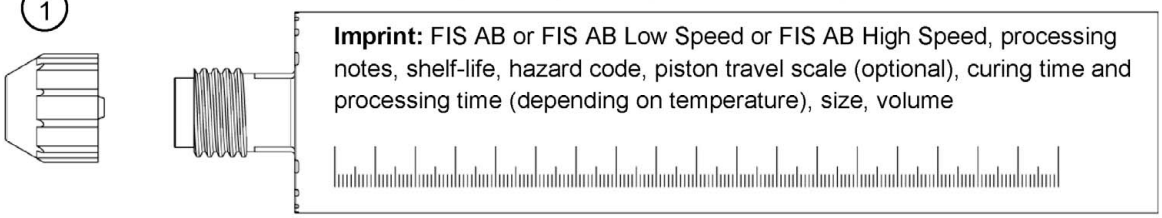

Static mixer FIS MR Plus for injection cartridges up to 410 ml

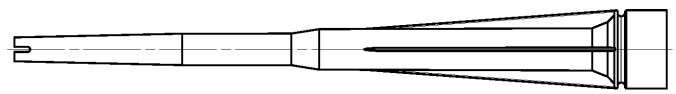

Static mixer FIS JMR for injection cartridges 825 ml

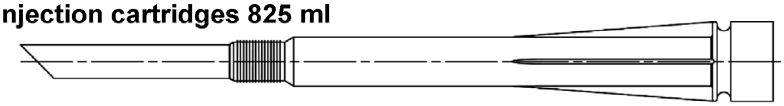

Extension tube Ø 9 for static mixer FIS MR Plus;
Extension tube Ø 9 or Ø 15 for static mixer FIS JMR

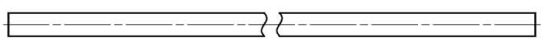

Cleaning brush BS

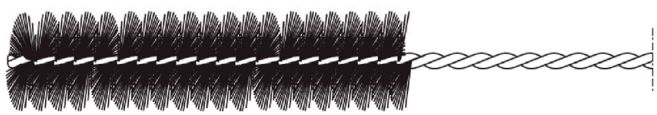

Blow-out pump AB-G

compressed-air cleaning tool

Overview system components part 2

fischer anchor rod

(2) 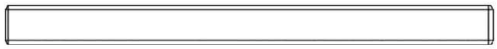

Size: M8, M10, M12

Internal threaded anchor FIS E

(5)

Size: 11x85 M6 / M8
15x85 M10 / M12

Perforated sleeve FIS H K

(7) 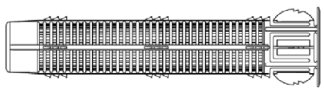

Size: FIS H 12x85 K
FIS H 16x85 K
FIS H 20x85 K

(7)

Size: FIS H 16x130 K
FIS H 20x130 K
FIS H 20x200 K

Washer

(3) 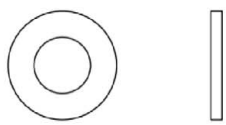

Hexagon nut

(4)

Injection adapter

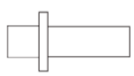

Figures not to scale

fischer injection system FIS AB for masonry

Product description
Overview system components part 2: steel parts / perforated sleeve,

Annex A 4

Table A5.1: Materials

Part	Designation	Material		
1	Mortar cartridge	Mortar, hardener; filler		
		Steel zinc plated	Stainless steel R acc. to EN 10088-1:2014 Corrosion resistance class CRC III acc. to EN 1993-1-4:2006+A1:2015	High corrosion-resistant steel HCR acc. to EN 10088-1:2014 Corrosion resistance class CRC V acc. to EN 1993-1-4:2006+A1:2015
2	Anchor rod	Property class 4.6, 4.8; 5.8 or 8.8; EN ISO 898-1: 2013 zinc plated ≥ 5µm, EN ISO 4042:2018Zn5/An(A2K) or hot-dip galvanised EN ISO 10684: 2004+AC:2009 f_{uk} ≤ 1000 N/mm^2 A_5 > 8% fracture elongation	Property class 50, 70 or 80; EN ISO 3506-1:2020 1.4401; 1.4404; 1.4578; 1.4571; 1.4439; 1.4362; 1.4062; 1.4662; 1.4462; EN 10088-1:2014 f_{uk} ≤ 1000 N/mm^2 A_5 > 8% fracture elongation	Property class 50 or 80; EN ISO 3506-1:2020 or property class 70 with f_{yk}= 560 N/mm^2 1.4565; 1.4529 EN 10088-1:2014 f_{uk} ≤ 1000 N/mm^2 A_5 > 8% fracture elongation
3	Washer ISO 7089:2000	zinc plated ≥ 5µm, EN ISO 4042:2018 Zn5/An(A2K) or hot-dip galvanised EN ISO 10684:2004+AC:2009	1.4401; 1.4404; 1.4578; 1.4571; 1.4439; 1.4362; EN 10088-1:2014	1.4565;1.4529 EN 10088-1:2014
4	Hexagon nut	Property class 5 or 8 EN ISO 898-2:2012 zinc plated ≥ 5µm, EN ISO 4042:2018 Zn5/An(A2K) or hot-dip galvanised EN ISO 10684:2004+AC:2009	Property class 50, 70 or 80; EN ISO 3506-2:2020 1.4401; 1.4404; 1.4578; 1.4571; 1.4439; 1.4362; EN 10088-1:2014	Property class 50, 70 or 80; EN ISO 3506-2:2020 1.4565; 1.4529 EN 10088-1:2014
5	Internal threaded anchor FIS E	Property class 5.8; EN 10277-1:2018 zinc plated ≥ 5µm, EN ISO 4042:2018Zn5/An(A2K)	Property class 70; EN ISO 3506-1:2020 1.4401; 1.4404; 1.4578; 1.4571; 1.4439; 1.4362; EN 10088-1:2014	Property class 70 EN ISO 3506-1:2020 1.4565; 1.4529 EN 10088-1:2014
6	Commercial standard screw or threaded rod for internal threaded anchor FIS E	Property class 5.8 or 8.8; EN ISO 898-1:2013 zinc plated ≥ 5µm, EN ISO 4042:2018Zn5/An(A2K)	Property class 70; EN ISO 3506-1:2020 1.4401; 1.4404; 1.4578; 1.4571; 1.4439; 1.4362; EN 10088-1:2014	Property class 70; EN ISO 3506-1:2020 1.4565; 1.4529 EN 10088-1:2014
7	Perforated sleeve	PP / PE		

Specifications of intended use part 1

Table B1.1: Overview use and performance categories

Anchorages subject to		fischer injection systems FIS AB for masonry	
Hole drilling with hammer drill mode		all bricks; without C 20 to C 23, C 26 to C 27	
Hole drilling with rotary drill mode		all bricks	
Static and quasi static load, in masonry		all bricks	
Use conditions	dry or wet masonry	all bricks	
Installation	Pre-positioned anchorage	Anchor rod or internal threaded anchor (in solid brick masonry and autoclaved aerated concrete)	Perforated sleeve with anchor rod or internal threaded anchor (in perforated and solid brick masonry) Size: FIS H 12x85 K FIS H 16x85 K FIS H 16x130 K FIS H 20x85 K FIS H 20x130 K FIS H 20x200 K
	Push through anchorage	Anchor rod; use only in cylindrical drill hole (in solid brick masonry and autoclaved aerated concrete)	---
Installation and use conditions	condition d/d condition w/d condition w/w	all bricks	
Installation temperature		$T_{i,min}$ = 0 °C to $T_{i,max}$ = +40 °C	
In-service temperature	Temperature range Tb	-40 °C to +80 °C	(max. short term temperature +80 °C max. long term temperature +50 °C)

Specifications of intended use part 2

Anchorages subject to:

- Static and quasi-static loads

Base materials:

- Solid brick masonry (base material group b) and autoclaved aerated concrete (base material group d), acc. to Annex B 10
- Hollow brick masonry (base material group c), according to Annex B 10
- For minimum thickness of masonry member h_{ef}+30mm applies
- Mortar strength class of the masonry M2,5 at minimum according to EN 998-2:2016
- For other bricks in solid masonry, hollow or perforated masonry and autoclaved aerated concrete, the characteristic resistance of the anchor may be determined by job site tests according to EOTA Technical Report TR 053:2016-04, Annex B under consideration of the β-factor according to Annex C 33, Table C33.1

  Note (only applies to solid bricks and autoclaved aerated concrete):
  The characteristic resistance is also valid for larger brick sizes, higher compressive strength and higher raw density of the masonry unit.

Temperature Range:

- **Tb:** From - 40°C to +80°C (max. short term temperature +80°C and max. long term temperature +50°C)

Use conditions (Environmental conditions):

- **X1:** Structures subject to dry internal conditions exist
  (zinc coated steel, stainless steel or high corrosion resistant steel)
- **X2:** Structures subject to external atmospheric exposure including industrial and marine environment or exposure to permanently damp internal condition, if no particulary aggressive conditions exist
  (stainless steel or high corrosion resistant steel)
- **X3:** Structures subject to external atmospheric exposure and to permanently damp internal condition, if other particulary aggressive conditions exist (high corrosion resistant steel)

  Note: Particulary aggressive conditions are e.g. permanent, alternating immersion in seawater or the splash zone of seawater, chloride atmosphere of indoor swimming pools or atmosphere with extreme chemical pollution (e.g. in desulphurization plants or road tunnels where de-icing materials are used)

Specifications of intended use part 2 continued

Design:

- The anchorages have to be designed in accordance with EOTA Technical Report TR 054:2016-04, Design method A under the responsibility of an engineer experienced in anchorages and masonry work. Applies to all bricks, if no other values are specified:

  $N_{Rk} = N_{Rk,b} = N_{Rk,p}$

  $V_{Rk} = V_{Rk,b} = V_{Rk,c}$

  For the Calculation of pulling out a brick under tension loading $\mathbf{N_{Rk,pb}}$ or pushing out a brick under shear loading $\mathbf{V_{Rk,pb}}$ see EOTA Technical Report TR 054:2016-04.

  $\mathbf{N_{Rk,s}}$, $\mathbf{V_{Rk,s}}$ and $\mathbf{M^0_{Rk,s}}$ see annex C1-C3

  Factors for job site tests and displacements see Annex C 33

- Verifiable calculation notes and drawings have to be prepared taking account the relevant masonry in the region of the anchorage, the loads to be transmitted and their transmission to the supports of the structure. The position of the anchor is indicated on the design drawings.

Installation:

- Condition d/d: - Installation and use in dry structures
- Condition w/w: - Installation and use in dry and wet structures
- Condition w/d: - Installation in wet structures and use in dry structures
- Hole drilling see Annex C (drilling method)
- In case of aborted hole: The hole shall be filled with mortar
- Bridging of unbearing layer (e.g. plaster) at perforated brick masonry see Annex B 6, Table B6.1
- Anchor installation carried out by appropriately qualified personnel and under the supervision of the person responsible for technical matters of the site
- Fastening screws or anchor rods (including nut and washer) must comply with the appropriate material and property class of the internal threaded anchor FIS E.
- minimum curing time see Annex B 7, Table B7.2
- Commercial standard threaded rods, washers and hexagon nuts may also be used if the following requirements are fulfilled:

  Material dimensions and mechanical properties of the metal parts according to the specifications are given in Annex A 5, Table 5.1

  Conformation of material and mechanical properties of the metal parts by inspection certificate 3.1 according to EN 10204:2004, the documents shall be stored

  Marking of the anchor rod with the envisage embedment depth. This may be done by the manufacturer of the rod or by a person on job site

Table B4.1: Installation parameters for anchor rods in solid bricks and autoclaved aerated concrete without perforated sleeves

Anchor rod	Thread	M8	M10	M12
Nominal drill hole diameter	d_0 [mm]	10	12	14
Effective anchorage depth h_{ef} [1)] in AAC cylindrical drill hole	$h_{0,min}=h_{ef,min}$ [mm]	100		
	$h_{0,max}=h_{ef,max}$ [mm]	min (h-30, ≤200)		
Effective anchorage depth h_{ef} [1)] in solid brick (depth of drill hole $h_0 = h_{ef}$)	$h_{ef,min}$ [mm]	50		
	$h_{ef,max}$ [mm]	min (h-30, ≤200)		
Diameter of clearance hole in the fixture	pre-position $d_f \leq$ [mm]	9	12	14
	push through $d_f \leq$ [mm]	11	14	16
Diameter of cleaning brush	$d_b \geq$ [mm]	see Table B7.1		
Maximum installation torque	max T_{inst} [Nm]	see parameters of brick Annex C		

[1)] $h_{ef,min} \leq h_{ef} \leq h_{ef,max}$ is possible.

fischer anchor rods M8, M10, M12

Marking (on random place) fischer anchor rod:

Steel zinc plated PC[1)] 8.8	• or +	Steel hot-dip galvanised PC[1)] 8.8	•
High corrosion resistant steel HCR PC[1)] 50	•	High corrosion resistant steel HCR PC[1)] 70	–
High corrosion resistant steel HCR PC[1)] 80	(	Stainless steel R property class 50	~
Stainless steel R property class 80	∗		

Alternatively: Colour coding according to DIN 976-1: 2016; property class 4.6 marking according to EN ISO 898-1:2013

[1)] PC = property class

Installation conditions:

Anchor rod in cylindrical drill hole

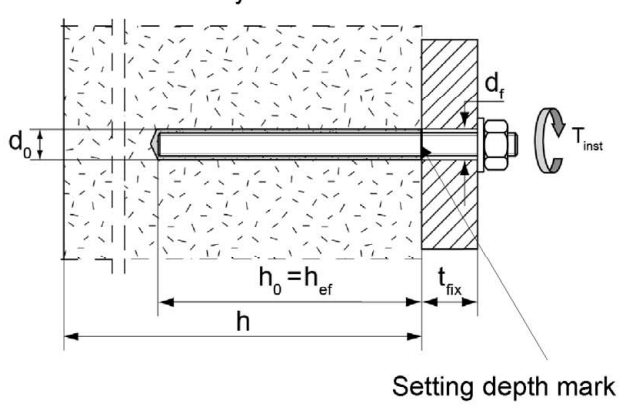

Figures not to scale

fischer injection system FIS AB for masonry

Intended Use
Installation parameters for anchor rods without perforated sleeve

Annex B 4

Table B5.1: Installation parameters for internal threaded anchors FIS E in solid bricks and autoclaved aerated concrete without perforated sleeves

Internal threaded anchor FIS E		11x85 M6	11x85 M8	15x85 M10	15x85 M12
Diameter of anchor	d_H [mm]	11		15	
Nominal drill hole diameter	d_0 [mm]	14		18	
Length of anchor	L_H [mm]	85			
Effective anchorage depth	$h_0 = h_{ef}$ [mm]	85			
Diameter of cleaning brush	$d_b \geq$ [mm]	see Table B7.1			
Maximum installation torque	max T_{inst} [Nm]	see parameters of brick Annex C			
Diameter of clearance hole in the fixture	d_f [mm]	7	9	12	14
Screw-in depth	$l_{E,min}$ [mm]	6	8	10	12
	$l_{E,max}$ [mm]	60			

Internal threaded anchor FIS E

FIS E 11x85 M6, FIS E 11x85 M8

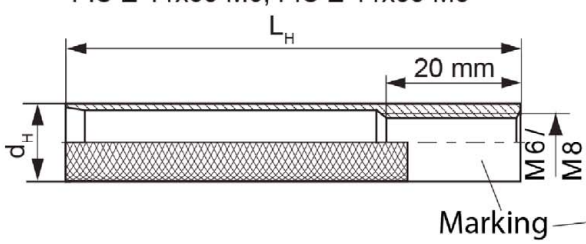

FIS E 15x85 M10, FIS E 15x85 M12

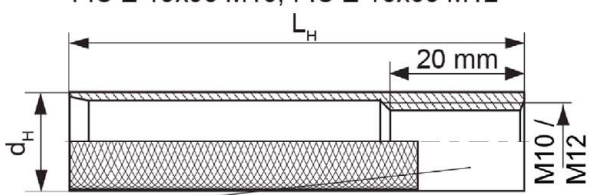

Marking:

Size, e.g. **M8**, Stainless steel: R, e.g. **M8 R**, High corrosion-resistant steel: HCR, e.g. **M8 HCR**

Installation conditions:

Internal threaded anchor in cylindrical drill hole

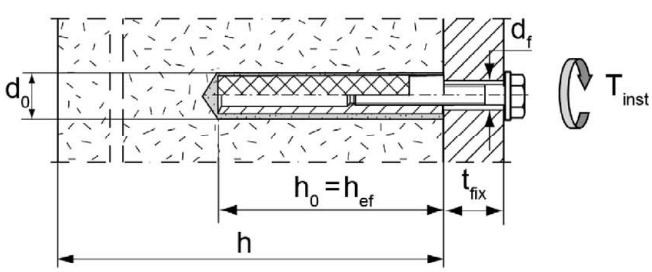

Figures not to scale

fischer injection system FIS AB for masonry

Intended Use
Installation parameters for internal threaded rods FIS E without perforated sleeve

Annex B 5

Table B6.1: Installation parameters for anchor rods and internal threaded anchors FIS E with perforated sleeves (pre-positioned anchorage)

perforated sleeve FIS H K		12x85	16x85	16x130[2)]	20x85	20x130[2)]	20x200[2)]
Nominal drill hole diameter $d_0 = D_{sleeve,nom}$	d_0 [mm]	12	16		20		
Depth of drill hole	h_0 [mm]	90	90	135	90	135	205
Effective anchorage depth	$h_{ef,min}$ [mm]	85	85	110	85	110	180
	$h_{ef,max}$ [mm]	85	85	130	85	130	200
Size of threaded rod	[-]	M8	M8 and M10		M12		
Size of internal threaded anchor FIS E		-	11x85	-	15x85	-	-
Diameter of cleaning brush[1)]	$d_b \geq$ [mm]	see Table B7.1					
Max. installation torque	max T_{inst} [Nm]	see parameters of brick Annex C					

[1)] Only for solid areas in hollow bricks and solid bricks.

[2)] Bridging of unbearing layer (e.g. plaster) is possible. When reducing the effective anchorage depth $h_{ef,\,min}$, the values of the next shorter perforated sleeve of the same diameter must be used. The smaller value of charastereristic resistance must be taken.

Perforated sleeve

FIS H 12x85 K; FIS H 16x85 K; FIS H 16x130 K;
FIS H 20x85 K, FIS H 20x130 K: FIS H 20x200 K

Marking:
Size $D_{sleeve,\,nom}$ x L_{sleeve}
(e.g.: 16x85)

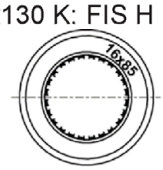

$D_{sleeve,\,nom}$

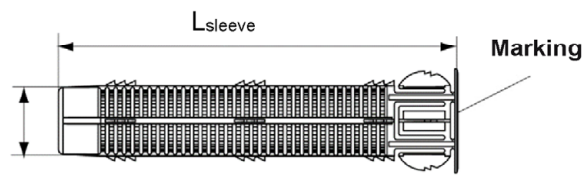

Internal threaded anchor FIS E

FIS E 11x85 M6, FIS E 11x85 M8

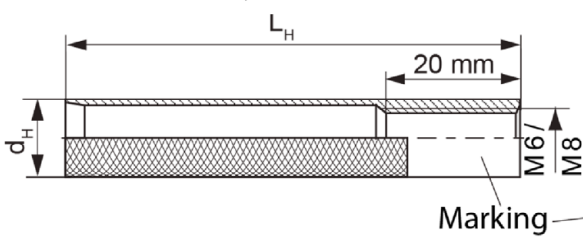

FIS E 15x85 M10, FIS E 15x85 M12

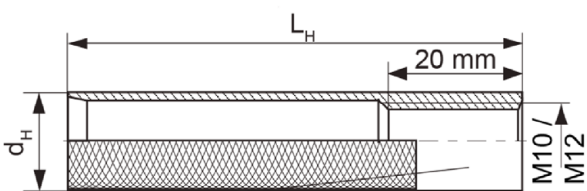

Installation conditions:

Anchor rod with perforated sleeve

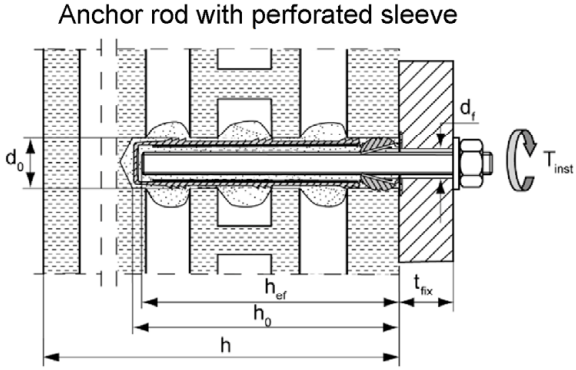

Internal threaded anchor with perforated sleeve

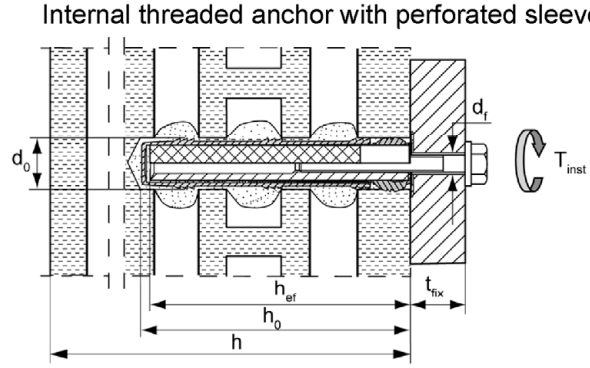

Figures not to scale

fischer injection system FIS AB for masonry

Intended Use
Installation parameters for anchor rods and internal threaded anchors FIS E with perforated sleeve (pre-positioned anchorage)

Annex B 6

Table B7.1: Parameters of the cleaning brush BS (steel brush with steel bristles)

The size of the cleaning brush refers to the drill hole diameter

Drill hole diameter	d_0 [mm]	8	10	12	14	16	18	20
Brush diameter	d_b [mm]	9	11	14	16	20	20	25

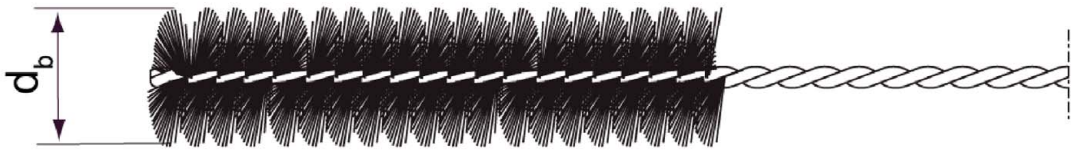

Only for solid bricks and autoclaved aerated concrete or solid areas of perforated bricks and hollow blocks

Table B7.2: Maximum processing times and minimum curing times
(During the curing time of the mortar the masonry temperature may not fall below the listed minimum temperature)

Temperature at anchoring base [°C]	Maximum processing time t_{work}			Minimum curing time [1] t_{cure}		
	FIS AB High Speed [3]	FIS AB [2]	FIS AB Low Speed [2]	FIS AB High Speed [3]	FIS AB [2]	FIS AB Low Speed [2]
0 to 5	5 min	13 min	20 min	3 h	3 h	6 h
> 5 to 10	3 min	9 min	20 min	50 min	90 min	3 h
> 10 to 20	1 min	5 min	10 min	30 min	60 min	2 h
> 20 to 30	-	4 min	6 min	-	45 min	60 min
> 30 to 40	-	2 min	4 min	-	35 min	30 min

[1] For wet bricks the curing time must be doubled

[2] Minimum cartridge temperature +5°C

[3] Minimum cartridge temperature ±0°C

Figures not to scale

Installation instruction part 1

Installation in solid brick and autoclaved aerated concrete (without perforated sleeve)

1	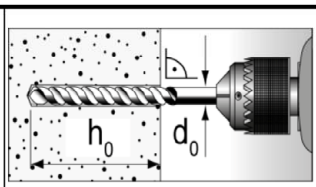	Drill the hole (drilling method see Annex C of the respective brick) depth of drill hole h_0 and drill hole diameter d_0 see **Table B4.1; B5.1**		
2	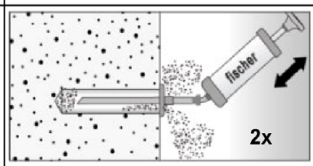	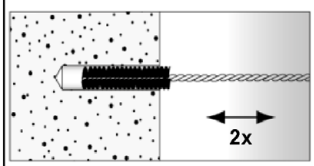	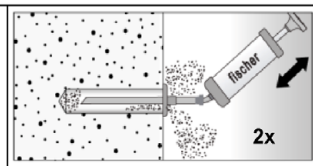	Blow out the drill hole twice. Brush twice and blow out twice again.
3	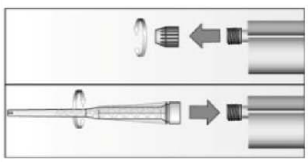	Remove the sealing cap. Screw on the static mixer. (the spiral in the static mixer must be clearly visible)		
4	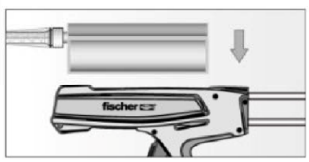	Place the cartridge into a suitable dispenser	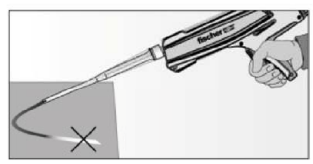	Press out approximately 10 cm of mortar until the resin is permanently grey in colour. Mortar which is not grey in colour will not cure and must be disposed of.
5	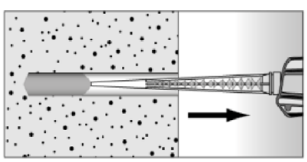	Fill approximetly 2/3 of the drill hole with mortar beginning from the bottom of the hole[1]. Avoid bubbles!	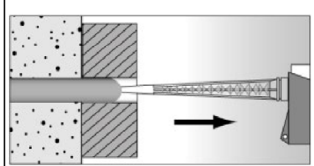	For push through anchorage (not FIS E) fill the annular clearance with mortar.
6	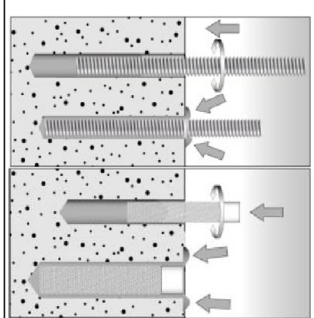	Only use clean and oil-free metal parts. Mark the anchor rod for setting depth. Insert the anchor rod or internal threaded anchor FIS E by hand using light turning motions. When reaching the setting depth marking, excess mortar must emerge from the mouth of the drill hole.		
7		Do not touch. Minimum curing time see Table **B7.2**	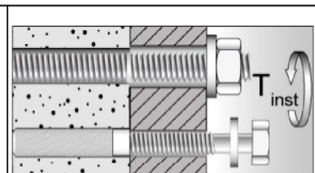	Mounting the fixture. max T_{inst} see parameter of brick in Annex C.

[1] Exact volume of mortar see manufacturer´s specification.

Installation instruction part 2

Installation in perforated or solid brick with perforated sleeve (pre-positioned anchorage)

1	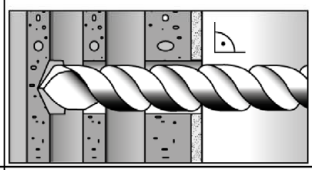	Drill the hole (drilling method see Annex C of the respective brick). depth of drill hole $\mathbf{h_0}$ and drill hole diameter $\mathbf{d_0}$ see **Table B6.1**	When install perforated sleeves in solid bricks or solid areas of hollow bricks, also clean the hole by blowing out and brushing.	
2	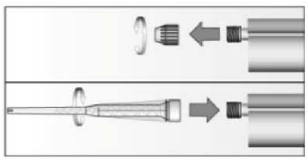	Remove the sealing cap. Screw on the static mixer. (the spiral in the static mixer must be clearly visible)		
3		Place the cartridge into a suitable dispenser.	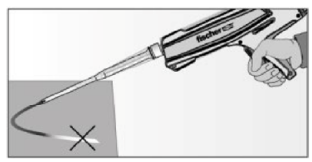	Press out approximately 10 cm of mortar until the resin is permanently grey in colour. Mortar which is not grey in colour will not cure and must be disposed of.
4	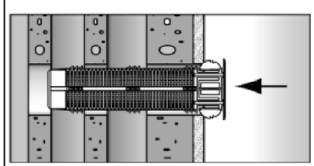	Insert the perforated sleeve flush with the surface of the masonry or plaster.	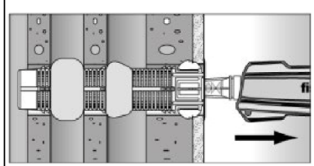	Fill the perforated sleeve completely with mortar beginning from the bottom of the hole[1].
5	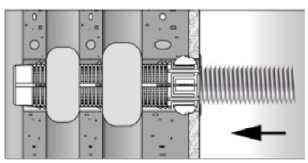	Only use clean and oil-free metal parts. Mark the ancher rod for setting depth. Insert the anchor rod or the internal threaded anchor FIS E by hand using light turning motions until reaching the setting depth marking (anchor rod) or flush with the surface (internal threaded anchor).		
6		Do not touch. Minimum curing time see Table **B8.2**	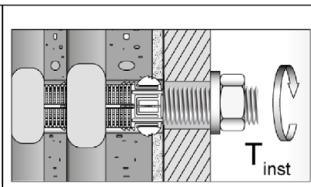	Mounting the fixture. max T_{inst} see parameter of brick in Annex C.

[1] Exact volume of mortar see manufacturer´s specification.

Table B10.1: Overview of controlled bricks part 1

Kind of masonry	Brick format [mm]		Compressive strength f_b [N/mm²]	Producing counrty	Density ρ [kg/dm³]	Annex
Solid brick Mz						
Solid brick Mz	**NF**	≥240x115x71	12 / 20	Germany	≥1,8	C 4 – C 7
	2DF	≥240x115x113	10 / 16	Germany	≥1,8	C 8 / C 9
		≥ 245x118x54	10 / 20	Italy	≥1,8	C 10 / C 11
Solid sand- lime brick KS / perforated Sand- lime brick KSL						
Solid sand - lime brick KS	**NF**	≥240x115x71	12 / 20	Germany	≥2,0	C12 / C 13
Perforated sand - lime brick KSL	**3DF**	240x175x113	12 / 20	Germany	≥1,4	C 14 – C 15
Vertical perforated brick HLz						
Vertical perforated brick HLz		370x240x237	10	Germany	≥1,0	C 16 / C 17
		500x175x237	10	Germany	≥1,0	C 16 / C 17
	2DF	240x115x113	20	Germany	≥1,4	C 18 / C 19
		248x365x249	8 - 12	Germany	≥0,7	C 20 / C 21
		248x425x248	4 - 8	Germany	≥0,6	C 22 / C 23
		253x300x240	2 - 6	Austria	≥0,8	C 24 / C 25
		250x440x250	6 - 10	Austria	≥0,7	C 26 / C 27
Light-weight concrete hollow block Hbl						
Light-weight concrete hollow block Hbl		362x240x240	4	Germany	≥1,0	C 28 / C 29
Autoclaved aerated concrete (AAC)						
PP2 / AAC		-	2	Germany	0,35	C30 - C 32
PP4 / AAC		-	4	Germany	0,50	C30 - C 32
PP6 / AAC		-	6	Germany	0,65	C30 - C 32

Table B11.1: Overview dimensions of perforated and hollow bricks part 1

Perforated sand-lime brick KSL, 3DF,
EN 771-2:2011+A1:2015; e.g. KS Wemding according to Annex C 14

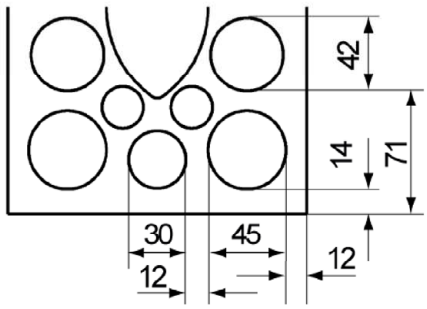

Vertical perforated brick HLz,
EN 771-1:2011+A1:2015: e.g. Wienerberger, Poroton according to Annex C 16

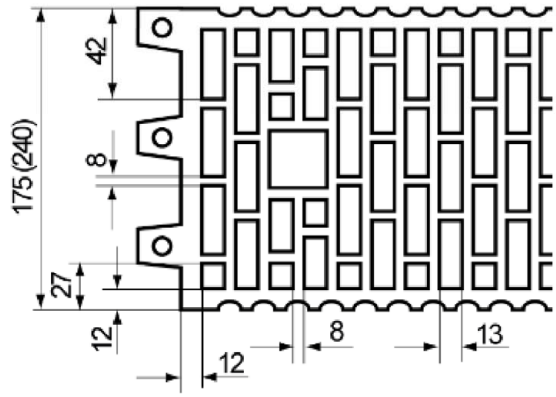

Vertical perforated brick HLz, 2DF,
EN 771-1:2011+A1:2015;
e.g. Wienerberger according to Annex C 18

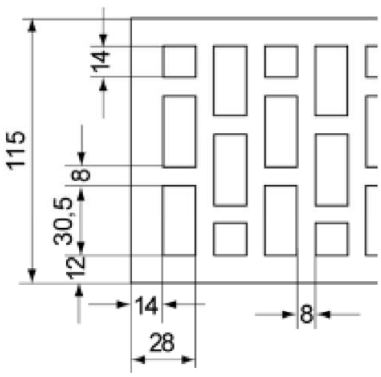

Vertical perforated brick HLz, T10, T11,
EN 771-1:2011+A1:2015; according to Annex C 20

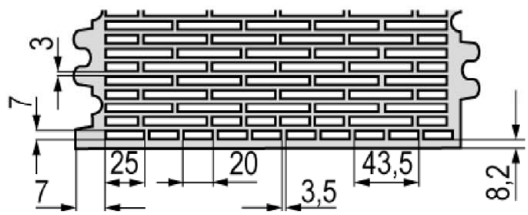

Figures not to scale

Table B12.1: Overview dimensions of perforated and hollow bricks part 2

Vertical perforated brick HLz, FZ 7, filled with mineral wool, EN 771-1:2011+A1:2015; according to Annex C 22

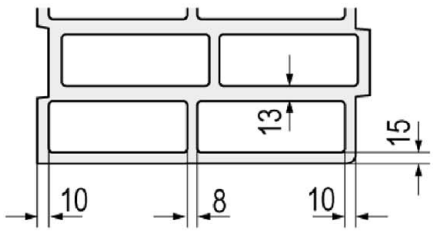

Vertical perforated brick HLz, EN 771-1:2011+A1:2015; e.g. Ziegelwerk Brenner according to Annex C 24

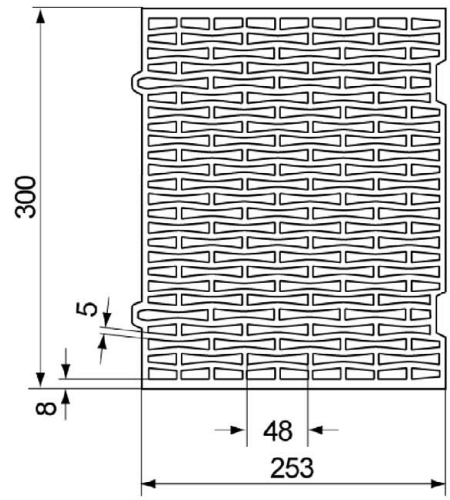

Vertical perforated brick HLz, Porotherm W 44, filled with mineral wool, EN 771-1:2011+A1:2015 according to Annex C 26

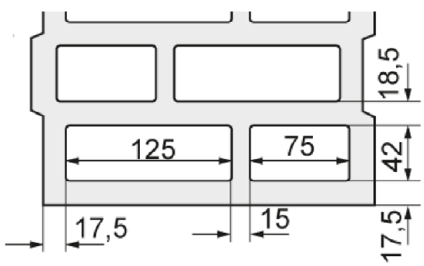

Light-weight concrete hollow block Hbl, EN 771-3:2011+A1:2015; according to Annex C 28

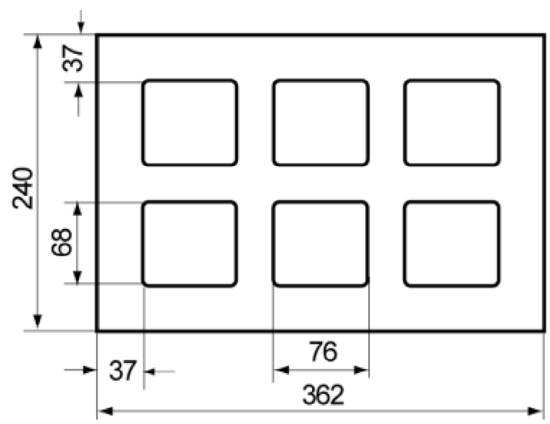

Figures not to scale

fischer injection system FIS AB for masonry

Intended use
Overview dimensions of perforated and hollow bricks part 2

Annex B 12

Spacing and edge distance

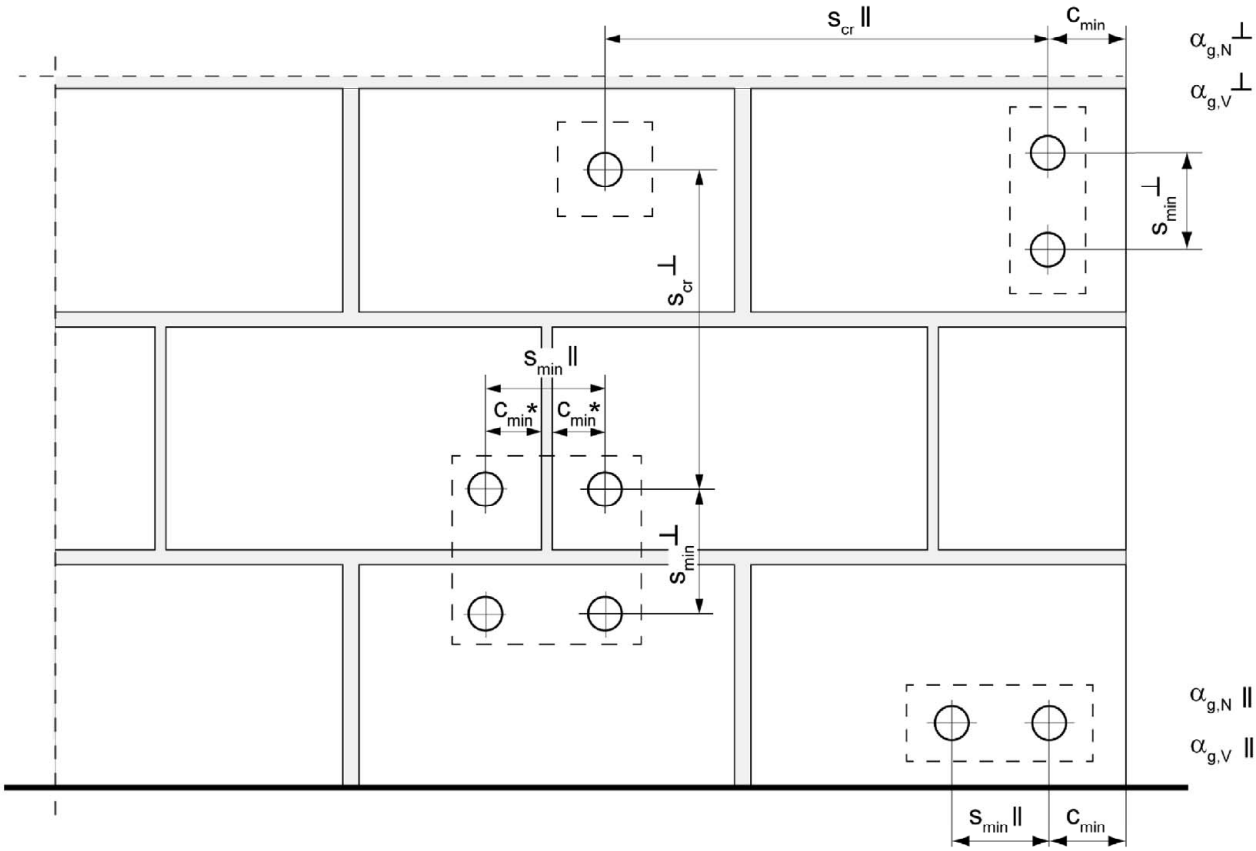

* Only, if vertical joints are not completely filled with mortar

s_{min} II	=	Minimum spacing parallel to bed joint
s_{min} ⊥	=	Minimum spacing vertical to bed joint
s_{cr} II	=	Characteristic spacing parallel to bed joint
s_{cr} ⊥	=	Characteristic spacing vertical to bed joint
$c_{cr} = c_{min}$	=	Edge distance
$\alpha_{g,N}$ II	=	Group factor for tension loading, anchor group parallel to bed joint
$\alpha_{g,V}$ II	=	Group factor for shear loading, anchor group parallel to bed joint
$\alpha_{g,N}$ ⊥	=	Group factor for tension loading, anchor group vertical to bed joint
$\alpha_{g,V}$ ⊥	=	Group factor for shear loading, anchor group vertical to bed joint

For $s \geq s_{cr}$ $\alpha_g = 2$

For $s_{min} \leq s < s_{cr}$ α_g according to installation parameters of brick

$N^g_{Rk} = \alpha_{g,N} \cdot N_{Rk}$; $V^g_{Rk} = \alpha_{g,V} \cdot V_{Rk}$ (Group of 2 anchors)

$N^g_{Rk} = \alpha_{g,N}$ II $\cdot$ $\alpha_{g,N}$⊥ $\cdot N_{Rk}$; $V^g_{Rk} = \alpha_{g,V}$ II $\cdot$ $\alpha_{g,V}$⊥ $\cdot V_{Rk}$ (Group of 4 anchors)

Table C1.1: Characteristic **resistance** to **steel failure** under tension loading of fischer **anchor rods** and **standard threaded rods**

Anchor rod / standard threaded rod				**M8**	**M10**	**M12**
Characteristic resistance to steel failure under tension loading [3]						
Characteristic resistance $N_{Rk,s}$	Steel zinc plated	Property class 4.6	[kN]	15(13)	23(21)	33
		4.8		15(13)	23(21)	33
		5.8		19(17)	29(27)	43
		8.8		29(27)	47(43)	68
	Stainless steel R and High corrosion resistant steel HCR	50		19	29	43
		70		26	41	59
		80		30	47	68
Partial factors [1]						
Partial factor $\gamma_{Ms,N}$	Steel zinc plated	Property class 4.6	[-]	2,00		
		4.8		1,50		
		5.8		1,50		
		8.8		1,50		
	Stainless steel R and High corrosion resistant steel HCR	50		2,86		
		70		1,50[2] / 1,87		
		80		1,60		

[1] In absence of other national regulations

[2] Only for fischer FIS A made of high corrosion-resistant steel HCR

[3] Values in brackets are valid for undersized threaded rods with smaller stress area A_s for hot dip galvanised standard threaded rods according to EN ISO 10684:2004+AC:2009

Table C2.1: Characteristic resistance to **steel failure** of fischer **anchor rods** and **standard threaded rods under shear loading**

Anchor rod / standard threaded rod				M8	M10	M12
Characteristic resistance under shear loading, steel failure [3)]						
without lever arm						
Characteristic resistance $V_{Rk,s}$	Steel zinc plated	Property class	4.6	[kN]	9(8)	14(13)	20
			4.8		9(8)	14(13)	20
			5.8		11(10)	17(16)	25
			8.8		15(13)	23(21)	34
	Stainless steel R and High corrosion resistant steel HCR		50		9	15	21
			70		13	20	30
			80		15	23	34
with lever arm						
Characteristic resistance $M^0_{Rk,s}$	Steel zinc plated	Property class	4.6	[Nm]	15(13)	30(27)	52
			4.8		15(13)	30(27)	52
			5.8		19(16)	37(33)	65
			8.8		30(26)	60(53)	105
	Stainless steel R and High corrosion resistant steel HCR		50		19	37	65
			70		26	52	92
			80		30	60	105
Partial factors[1)]						
Partial factor $\gamma_{Ms,V}$	Steel zinc plated	Property class	4.6	[-]	1,67		
			4.8		1,25		
			5.8		1,25		
			8.8		1,25		
	Stainless steel R and High corrosion resistant steel HCR		50		2,38		
			70		1,25[2)] / 1,56		
			80		1,33		

1) In absence of other national regulations

2) Only for fischer FIS A made of high corrosion-resistant steel HCR

3) Values in brackets are valid for undersized threaded rods with smaller stress area A_s for hot dip galvanised fischer anchor rod and standard threaded rods according to EN ISO 10684:2004+AC:2009.

Table C3.1: Characteristic **resistance to steel failure** of **internal threaded anchors FIS E under tension / shear loading**

Internal threaded anchor FIS E					M6	M8	M10	M12
Characteristic resistance to steel failure under tension loading,								
Characteristic resistance with screw	$N_{Rk,s}$	Property class	5.8	[kN]	10	18	29	42
		Property class 70	R		14	26	41	59
			HCR		14	26	41	59
Partial factors[1)]								
Partial factor	$\gamma_{Ms,N}$	Property class	5.8	[-]	1,50			
		Property class 70	R		1,87			
			HCR		1,87			
Characteristic resistance to steel failure under shear loading								
without lever arm								
Characteristic resistance with screw	$V_{Rk,s}$	Property class	5.8	[kN]	5	9	15	21
		Property class 70	R		7	13	20	30
			HCR		7	13	20	30
with lever arm								
Characteristic resistance	$M^0_{Rk,s}$	Property class	5.8	[Nm]	8	19	37	65
		Property class 70	R		11	26	52	92
			HCR		11	26	52	92
Partial factors[1)]								
Partial factor	$\gamma_{Ms,V}$	Property class	5.8	[-]	1,25			
		Property class 70	R		1,56			
			HCR		1,56			

[1)] In absence of other national regulations

Solid brick Mz, NF, EN 771-1:2011+A1:2015

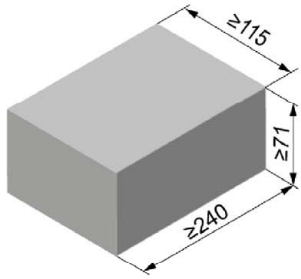

Solid brick Mz, NF, EN 771-1:2011+A1:2015			
Producer	e.g. Wienerberger		
Nominal dimensions [mm]	length L	width W	height H
	≥ 240	≥ 115	≥ 71
Density ρ [kg/dm³]	≥ 1,8		
Compressive strength f_b [N/mm²]	12 / 20		
Standard	EN 771-1:2011+A1:2015		

Table C4.1: Installation parameters for edge distance c=100mm

Anchor rod			**M8**	**M10**	**M12**	**-**	
Internal threaded anchor FIS E			**-**	**-**	**-**	**M6**	**M8**
						11x85	
Anchor rod and internal threaded anchor FIS E without perforated sleeve							
Effective anchorage depth	h_{ef}	[mm]	50	50	50	85	
			80	80	80		
			200	200	200		
Max. installation torque	max T_{inst}	[Nm]	10			4	10
General installation parameters							
Edge distance	c_{min}	[mm]	100			100	
Edge distance h_{ef}=200	c_{min}		150			-[1)]	
Spacing	s_{min} II,N		60			60	
	h_{ef}=200 s_{min} II,N		240			-[1)]	
	s_{min} II,V		240			240	
	s_{cr} II		240			240	
	s_{cr} ⊥ = s_{min} ⊥		75			75	
Drilling method							
Hammer drilling with hard metal hammer drill							

1) No performance assessed

Table C4.2: Group factors

Anchor rods			**M8**	**M10**	**M12**	**-**	
Internal threaded anchor FIS E			**-**	**-**	**-**	**M6**	**M8**
						11x85	
Edge distance	c_{min}	[mm]	**100**				
Group factor	$\alpha_{g,N}$ II	[-]	1,5				
	$\alpha_{g,V}$ II		2,0				
	h_{ef}=200 $\alpha_{g,N}$ II		1,5				
	h_{ef}=200 $\alpha_{g,V}$ II		2,0				
	$\alpha_{g,N}$ ⊥		2,0				
	$\alpha_{g,V}$ ⊥		2,0				
	h_{ef}=200 $\alpha_{g,N}$ ⊥		2,0				
	h_{ef}=200 $\alpha_{g,V}$ ⊥		2,0				

Solid brick Mz, NF, EN 771-1:2011+A1:2015

Table C5.1: Characteristic resistance under tension loading for edge distance c=100mm

Anchor rod		**M8**	**M10**		**M12**			**-**	
Internal threaded anchor FIS E		**-**	**-**		**-**			**M6**	**M8**
								11x85	
$N_{Rk} = N_{Rk,b} = N_{Rk,p}$ [kN] depending on the compressive strength f_b (temperature range 50/80°C)									
compressive strength f_b	use condition	Effective anchorage depth h_{ef} [mm]							
		≥ 50	50	80	200	50	80	200	85
12 N/mm²	w/w w/d	2,5	2,0	3,0	7,5	2,0	3,5	5,0	3,5
	d/d	4,0	3,5	5,0	12,0	3,0	5,5	8,0	5,5
20 N/mm²	w/w w/d	3,5	3,0	4,5	11,0	3,0	5,0	7,0	5,0
	d/d	5,5	5,0	7,0	12,0	4,5	8,0	11,5	8,0

Table C5.2: Characteristic resistance under shear loading for edge distance c=100mm

Anchor rod		**M8**	**M10**		**M12**		**-**	
Internal threaded anchor FIS E		**-**	**-**		**-**		**M6**	**M8**
							11x85	
$V_{Rk} = V_{Rk,b} = V_{Rk,c}$ [kN] depending on the compressive strength f_b (temperature range 50/80°C)								
compressive strength f_b	use condition	Effective anchorage depth h_{ef} [mm]						
		≥ 50	≥ 50	200	≥ 50	200	85	
12 N/mm²	w/w w/d d/d	2,5	4,0	8,5	4,0	11,5	2,5	
20 N/mm²	w/w w/d d/d	4,0	6,0	12,0	5,5	12,0	4,0	

Factor for job site tests and displacements see annex C33

Solid brick Mz, NF, EN 771-1:2011+A1:2015

Table C6.1: Installation parameters for edge distance c=60mm

Anchor rod			M8	M10	M12	-	
Internal threaded anchor FIS E			-	-	-	M6	M8
						11x85	
Anchor rod and internal threaded anchor FIS E without perforated sleeve							
Effective anchorage depth	h_{ef}	[mm]	50	50	50	85	
			100	100	100		
			200	200	200		
Max. installation torque	max T_{inst}	[Nm]	10			4	10
General installation parameters							
Edge distance	c_{min}	[mm]	60				
Edge distance h_{ef}=200	c_{min}		60				
Spacing	s_{min} II,N		80				
	h_{ef}=200 s_{min} II,N		80				
	s_{min} II,V		80				
	s_{cr} II		3x h_{ef}				
	s_{min} ⊥		80				
	s_{cr} ⊥		3x h_{ef}				
Drilling method							
Hammer drilling with hard metal hammer drill							

Table C6.2: Group factors

Anchor rod			M8	M10	M12	-	
Internal threaded anchor FIS E			-	-	-	M6	M8
						11x85	
Edge distance	c_{min}	[mm]	60				
Group factor	$\alpha_{g,N}$ II	[-]	0,6				
	$\alpha_{g,V}$ II		1,3				
	h_{ef}=200 $\alpha_{g,N}$ II		1,4				
	h_{ef}=200 $\alpha_{g,V}$ II		1,5				
	$\alpha_{g,N}$ ⊥		0,3				
	$\alpha_{g,V}$ ⊥		1,3				
	h_{ef}=200 $\alpha_{g,N}$ ⊥		2,0				
	h_{ef}=200 $\alpha_{g,V}$ ⊥		1,1				

Solid brick Mz, NF, EN 771-1:2011+A1:2015

Table C7.1: Characteristic resistance under tension loading for edge distance c=60mm

Anchor rod			**M8**		**M10**			**M12**			**-**	
Internal threaded anchor FIS E			**-**		**-**			**-**			**M6**	**M8**
											11x85	
$N_{Rk} = N_{Rk,b} = N_{Rk,p}$ [kN] depending on the compressive strength f_b (temperature range 50/80°C)												
compres-sive strength f_b	use condition		Effective anchorage depth h_{ef} [mm]									
			50	100	50	100	200	50	100	200	85	
12 N/mm²	w/w	w/d	2,0	2,0	2,0	2,5	-[1)]	2,0	2,5	-[1)]	-[1)]	
	d/d		3,0	4,0	3,0	4,0	9,5	3,0	4,0	9,5	-[1)]	
20 N/mm²	w/w	w/d	2,5	3,0	2,5	3,5	-[1)]	3,0	3,5	-[1)]	-[1)]	
	d/d		4,5	5,5	4,5	5,5	12	4,5	5,5	12	-[1)]	

[1)] No performance assessed

Table C7.2: Characteristic resistance under shear loading for edge distance c=60mm

Anchor rod			**M8**		**M10**			**M12**			**-**	
Internal threaded anchor FIS E			**-**		**-**			**-**			**M6**	**M8**
											11x85	
$V_{Rk} = V_{Rk,b} = V_{Rk,c}$ [kN] depending on the compressive strength f_b (temperature range 50/80°C)												
compres-sive strength f_b	use condition		Effective anchorage depth h_{ef} [mm]									
			50	100	50	100	200	50	100	200	85	
12 N/mm²	w/w	w/d	1,2	3,0	2,0	3,0	1,5	1,5	3,0	3,0	-[1)]	
	d/d											
20 N/mm²	w/w	w/d	1,5	4,5	3,0	4,5	2,5	2,0	4,5	4,5	-[1)]	
	d/d											

[1)] No performance assessed

Factor for job site tests and displacements see annex C 33

Solid brick Mz, 2DF, EN 771-1:2011+A1:2015

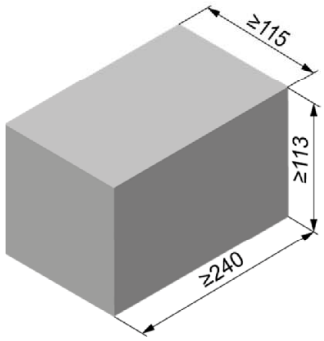

Solid brick Mz, 2DF, EN 771-1:2011+A1:2015			
Producer	e.g. Wienerberger		
Nominal dimensions [mm]	length L	width W	height H
	≥ 240	≥ 115	≥ 113
Density ρ [kg/dm³]	≥ 1,8		
Compressive strength f_b [N/mm²]	10 / 16		
Standard	EN 771-1:2011+A1:2015		

Table C8.1: Installation parameters

Anchor rod			**M8**		**M10**		**M12**		**-**		**-**	
Internal threaded anchor FIS E			**-**		**-**		**-**		**M6**	**M8**	**M10**	**M12**
									11x85		**15x85**	
Anchor rod and internal threaded anchor FIS E without perforated sleeve												
Effective anchorage depth	h_{ef}	[mm]	50	100	50	100	50	100	85			
Max. installation torque	max T_{inst}	[Nm]	10						4	10		
Anchor rod and internal threaded anchor FIS E with perforated sleeve FIS H 16x85 K												
Effective anchorage depth	h_{ef}	[mm]	85				-[1]		85		-[1]	
Max. installation torque	T_{inst}	[Nm]	10						4	10		
General installation parameters												
Edge distance	c_{min}	[mm]	60									
Spacing	s_{min} ∥	[mm]	120									
	s_{cr} ∥	[mm]	240									
	s_{cr} ⊥ = s_{min} ⊥	[mm]	115									
Drilling method												
Hammer drilling with hard metal hammer drill												

[1] No performance assessed

Table C8.2: Group factors

Anchor rods			**M8**	**M10**	**M12**	**-**		**-**	
Internal threaded anchor FIS E			**-**	**-**	**-**	**M6**	**M8**	**M10**	**M12**
						11x85		**15x85**	
Group factor	$\alpha_{g,N}$ ∥	[-]	1,5						
	$\alpha_{g,V}$ ∥	[-]	1,4						
	$\alpha_{g,N}$ ⊥	[-]	2						
	$\alpha_{g,V}$ ⊥	[-]							

fischer injection system FIS AB for masonry

Performance
Solid brick Mz, 2DF, dimensions, installation parameters

Annex C 8

Solid brick Mz, 2DF, EN 771-1:2011+A1:2015

Table C9.1: Characteristic resistance under tension loading

Anchor rod	M8	M10	M12	-		-		M8	M10	-	
Internal threaded anchor FIS E	-	-	-	M6	M8	M10	M12	-	-	M6	M8
				11x85		15x85				11x85	
Perforated sleeve FIS H K	-	-	-	-		-		16x85			

$N_{Rk} = N_{Rk,b} = N_{Rk,p}$ [kN] depending on the compressive strength f_b (temperature range 50/80°C)

compressive strength f_b	use condition		Effective anchorage depth h_{ef} [mm]							
			50	100	50	100	50	100	85	
10 N/mm²	w/w	w/d	1,5	2,5	1,5	3	2	3,5	2	1,5
	d/d		3,0	4,0	3,0	4,5	3	5,5	3	3
16 N/mm²	w/w	w/d	2,5	4	2,5	4,5	3,5	5,5	3,5	2,5
	d/d		4,5	7,0	4,5	7,5	5,5	8	5,5	4,5

Table C9.2: Characteristic resistance under shear loading

Anchor rod	M8	M10	M12	-		-		M8		-	
Internal threaded anchor FIS E	-	-	-	M6	M8	M10	M12	-	-	M6	M8
				11x85		15x85				11x85	
Perforated sleeve FIS H K	-	-	-	-		-		16x85			

$V_{Rk} = V_{Rk,b} = V_{Rk,c}$ [kN] depending on the compressive strength fb (temperature range 50/80°C)

compressive strength f_b	use condition		Effective anchorage depth h_{ef} [mm]									
			≥ 50			85						
10 N/mm²	w/w	w/d	3,0	3,0	3,5	2,5	3,0	3,0	3,0	3,0	3,5	2,5	3,0
	d/d											
16 N/mm²	w/w	w/d	5,0	5,5	5,5	4,0	5,0	5,0	5,0	5,0	6,0	4,0	5,0
	d/d											

Factor for job site tests and displacements see annex C 33

Solid brick Mz, EN 771-1:2011+A1:2015

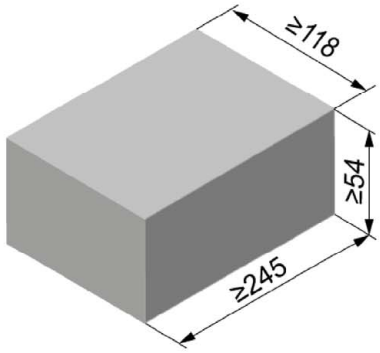

Solid brick Mz, EN 771-1:2011+A1:2015			
Producer	e.g. Nigra		
Nominal dimensions [mm]	length L	width W	height H
	≥ 245	≥ 118	≥ 54
Density ρ [kg/dm³]	≥ 1,8		
Compressive strength f_b [N/mm²]	10 / 20		
Standard	EN 771-1:2011+A1:2015		

Table C10.1: Installation parameters

Anchor rod			M8		M10		M12		-		-	
Internal threaded anchor FIS E			-		-		-		M6	M8	M10	M12
									11x85		15x85	
Anchor rod and internal threaded anchor FIS E without perforated sleeve												
Effective anchorage depth	h_{ef}	[mm]	50	100	50	100	50	100	85			
Max. installation torque	max T_{inst}	[Nm]	10						4	10		
General installation parameters												
Edge distance	c_{min}	[mm]	60									
Spacing	s_{cr} ∥ = s_{min} ∥	[mm]	245									
	s_{cr} ⊥ = s_{min} ⊥	[mm]	60									
Drilling method												
Hammer drilling with hard metal hammer drill												

Table C10.2: Group factors

Anchor rods			M8	M10	M12	-		-	
Internal threaded anchor FIS E			-	-	-	M6	M8	M10	M12
						11x85		15x85	
Group factor	$\alpha_{g,N}$ ∥	[-]	2						
	$\alpha_{g,V}$ ∥								
	$\alpha_{g,N}$ ⊥								
	$\alpha_{g,V}$ ⊥								

Solid brick Mz, EN 771-1:2011+A1:2015

Table C11.1: Characteristic resistance under tension loading

Anchor rod			M8	M10	M12	-		-	
Internal threaded anchor FIS E			-	-	-	M6	M8	M10	M12
						11x85		15x85	
$N_{Rk} = N_{Rk,b} = N_{Rk,p}$ [kN] depending on the compressive strength f_b (temperature range 50/80°C)									
compressive strength f_b	use condition		Effective anchorage depth h_{ef} [mm] ≥ 50				85		
10 N/mm²	w/w	w/d	0,9	0,75	0,75	0,6	0,75		
	d/d		1,5	1,2	1,2	1,2	1,2		
20 N/mm²	w/w	w/d	1,5	1,2	1,2	0,9	1,2		
	d/d		2,5	2,0	2,0	1,5	2,0		

Table C11.2: Characteristic resistance under shear loading

Anchor rod			M8	M10	M12	-		-	
Internal threaded anchor FIS E			-	-	-	M6	M8	M10	M12
						11x85		15x85	
$V_{Rk} = V_{Rk,b} = V_{Rk,c}$ [kN] depending on the compressive strength f_b (temperature range 50/80°C)									
compressive strength f_b	use condition		Effective anchorage depth h_{ef} [mm] ≥ 50			85			
10 N/mm²	w/w	w/d	3,0	4,0	4,5	2,0	3,0	4,0	4,5
	d/d								
20 N/mm²	w/w	w/d	4,0	5,5	6,0	2,5	4,0	5,5	6,0
	d/d								

Factor for job site tests and displacements see annex C 33

Solid sand-lime brick KS, NF, EN 771-2:2011+A1:2015

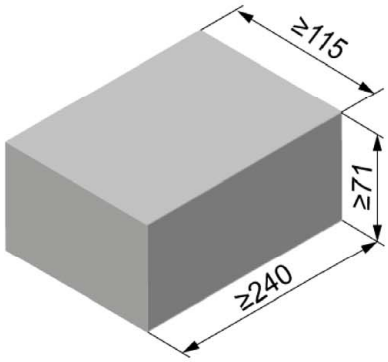

Solid sand-lime brick KS, NF, EN 771-2:2011+A1:2015			
Producer			
Nominal dimensions [mm]	length L	width W	height H
	≥ 240	≥ 115	≥ 71
Density ρ [kg/dm³]	≥ 1,8		
Compressive strength f_b [N/mm²]	12 / 20		
Standard	EN 771-2:2011+A1:2015		

Table C12.1: Installation parameters

Anchor rod			M8	M10	M12	-	
Internal threaded anchor FIS E			-	-	-	M6	M8
						11x85	
Anchor rod and internal threaded anchor FIS E without perforated sleeve							
Effective anchorage depth	h_{ef}	[mm]	50	50	50	85	
			100	100	100		
			-[1)]	200	200		
Max. Installation torque	max T_{inst}	[Nm]	5	15	15	3	5
General installation parameters							
Edge distance	c_{min}	[mm]	60				
Spacing	s_{min} ∥		80				
	s_{cr} ∥		3x h_{ef}				
	s_{min} ⊥		80				
	s_{cr} ⊥		3x h_{ef}				
Drilling method							
Hammer drilling with hard metal hammer drill							

Table C12.2: Group factors

Anchor rod			M8	M10	M12	-		-	
Internal threaded anchor FIS E			-	-	-	M6	M8	M10	M12
						11x85		15x85	
Group factor	$\alpha_{g,N}$ ∥	[-]	0,7						
	$\alpha_{g,V}$ ∥		1,3						
	$\alpha_{g,N}$ ⊥		2,0						
	$\alpha_{g,V}$ ⊥		2,0						

Solid sand-lime brick KS, NF, EN 771-2:2011+A1:2015

Table C13.1: Characteristic resistance under tension loading

Anchor rod		M8		M10			M12			-	
Internal threaded anchor FIS E		-		-			-			M6	M8
										11x85	
$N_{Rk} = N_{Rk,b} = N_{Rk,p}$ [kN] depending on the compressive strength f_b (temperature range 50/80°C)											
compressive strength f_b	use condition	Effective anchorage depth h_{ef} [mm]									
		50	100	50	100	200	50	100	200	85	
12 N/mm²	w/w w/d	2,5	4,5	2,5	3,5	7,0	2,5	3,0	6,5	2,5	
	d/d	4,0	8,0	4,0	5,5	12	4,0	4,5	12	4,0	
20 N/mm²	w/w w/d	3,5	6,5	3,5	4,5	10	3,5	4,0	9,5	3,5	
	d/d	6,0	11	6,0	8,0	12	6,0	6,5	12	6,0	

Table C15.2: Characteristic resistance under shear loading

Anchor rod		M8		M10		M12		-	
Internal threaded anchor FIS E		-		-		-		M6	M8
								11x85	
$V_{Rk} = V_{Rk,b} = V_{Rk,c}$ [kN] depending on the compressive strength f_b (temperature range 50/80°C)									
compressive strength f_b	use condition	Effective anchorage depth h_{ef} [mm]							
		50	100	50	≥100	50	≥100	85	
12 N/mm²	w/w w/d d/d	1,5	3,0	1,2	2,0	1,2	2,0	1,2	
20 N/mm²	w/w w/d d/d	2,5	4,0	1,5	3,0	1,5	3,0	1,5	

Factor for job site tests and displacements see annex C 33

Perforated sand-lime brick KSL, 3DF, EN 771-2:2011+A1:2015

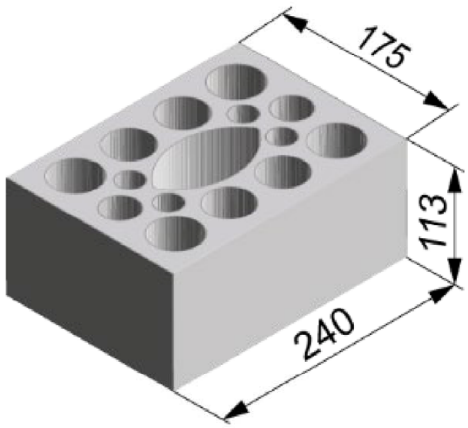

Perforated sand-lime brick KSL, 3DF, EN 771-2:2011+A1:2015			
Producer	e.g. KS Wemding		
Nominal dimensions [mm]	length L	width W	height H
	240	175	113
Density ρ [kg/dm³]	≥ 1,4		
Compressive strength f_b [N/mm²]	12 / 20		
Standard	EN 771-2:2011+A1:2015		

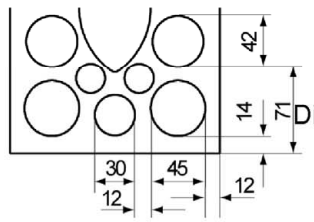

Dimension see also Annex B 11

Table C14.1: Installation parameters
(Pre-positioned anchorage with perforated sleeve FIS H K)

Anchor rod	**M8**	**-**	**M8**	**M10**	**M8**	**M10**	**-**	**M12**	**M12**
Internal threaded anchor FIS E	-	**M6** / **M8**	-		-		**M10** / **M12**	-	-
		11x85					**15x85**		
Perforated sleeve FIS H K	**12x85**	**16x85**			**16x130**		**20x85**		**20x130**

Anchor rod and internal threaded anchor FIS E with perforated sleeve FIS H K				
Max. installation torque	max T_{inst}	[Nm]	2	
General installation parameters				
Edge distance	c_{min}	[mm]	60	80
Spacing	s_{min} ∥	[mm]	100	
	s_{cr} ∥	[mm]	240	
	s_{min} ⊥	[mm]	115	
	s_{cr} ⊥	[mm]	115	
Drilling method				
Hammer drilling with hard metal hammer drill				

Table C14.2: Group factors

Anchor rod	**M8**	**-**	**M8**	**M10**	**M8**	**M10**	**-**	**M12**	**M12**
Internal threaded anchor FIS E	-	**M6** / **M8**	-		-		**M10** / **M12**	-	-
		11x85					**15x85**		
Perforated sleeve FIS H K	**12x85**	**16x85**			**16x130**		**20x85**		**20x130**

Group factors	$\alpha_{g,N}$ ∥ = $\alpha_{g,V}$ ∥	[-]	1,5
	$\alpha_{g,N}$ ⊥ = $\alpha_{g,V}$ ⊥	[-]	2,0

Perforated sand-lime brick KSL, 3DF, EN 771-2:2011+A1:2015

Table C15.1: Characteristic resistance under tension loading (Pre-positioned anchorage)

Anchor rod		**M8**	**-**		**M8**	**M10**	**M8**	**M10**	**-**		**M12**	**M12**
Internal threaded anchor FIS E		**-**	**M6**	**M8**	**-**		**-**		**M10**	**M12**	**-**	**-**
			11x85						**15x85**			
Perforated sleeve FIS H K		**12x85**	**16x85**				**16x130**		**20x85**			**20x130**
$N_{Rk} = N_{Rk,b} = N_{Rk,p}$ [kN] depending on the compressive strength f_b (temperature range 50/80°C)												
compressive strength f_b	use condition											
12 N/mm²	w/w	w/d	2,5		2,5				3,0		3,0	3,0
	d/d		2,5		3,0				3,5		3,5	3,5
20 N/mm²	w/w	w/d	4,0		4,5				5,5		5,5	5,5
	d/d		4,5		5,0				6,0		6,0	6,0

Table C15.1: Characteristic resistance under shear loading (Pre-positioned anchorage)

Anchor rod		**M8**	**-**		**M8**	**M10**	**M8**	**M10**	**-**		**M12**	**M12**
Internal threaded anchor FIS E		**-**	**M6**	**M8**	**-**		**-**		**M10**	**M12**	**-**	**-**
			11x85						**15x85**			
Perforated sleeve FIS H K		**12x85**	**16x85**				**16x130**		**20x85**			**20x130**
$V_{Rk} = V_{Rk,b} = V_{Rk,c}$ [kN] depending on the compressive strength f_b (temperature range 50/80°C)												
compressive strength f_b	use condition											
12 N/mm²	w/w	w/d	2,5				4,5					
	d/d											
20 N/mm²	w/w	w/d	4,0	4,5	4,0		7,5					
	d/d											

Factor for job site tests and displacements see annex C 33

Vertical perforated brick HLz, EN 771-1:2011+A1:2015

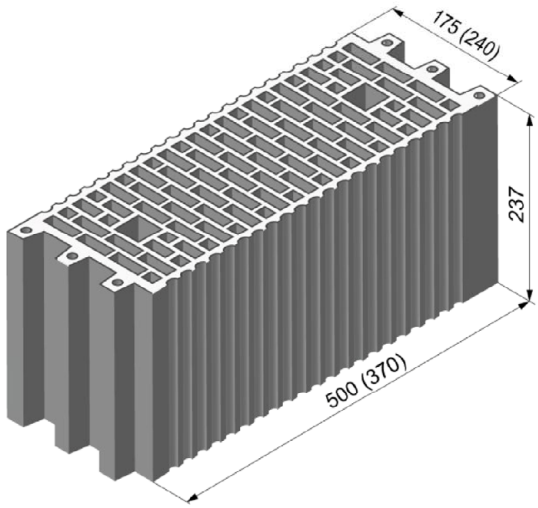

Vertical perforated brick HLz, EN 771-1:2011+A1:2015			
Producer	e.g. Wienerberger, Poroton		
Nominal dimensions [mm]	length L	width W	height H
	500	175	237
	370	240	237
Density ρ [kg/dm³]	≥ 1,0		
Compressive strength f_b [N/mm²]	10		
Standard	EN 771-1:2011+A1:2015		

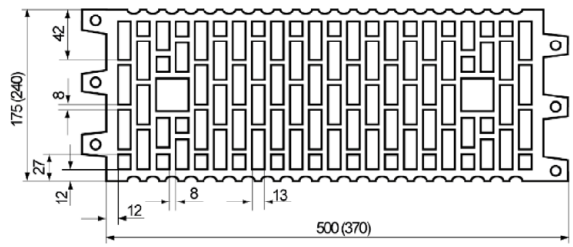

Dimension see also Annex B 11

Table C16.1: Installation parameters

Anchor rod	M8	-		M8	M10	M8	M10	-		M12	M12
Internal threaded anchor FIS E	-	M6	M8	-		-		M10	M12	-	-
		11x85						15x85			
Perforated sleeve FIS H K	12x85	16x85				16x130		20x85			20x130

Anchor rod and internal threaded anchor FIS E with perforated sleeve FIS H K			
Max. installation torque	max T_{inst}	[Nm]	2
General installation parameters			
Edge distance	c_{min}	[mm]	100
Spacing	s_{min} ∥		100
	s_{cr} ∥		500 (370)
	s_{min} ⊥		100
	s_{cr} ⊥		240
Drilling method			
Hammer drilling with hard metal hammer drill			

Table C16.2: Group factors

Anchor rod	M8	-		M8	M10	M8	M10	-		M12	M12
Internal threaded anchor FIS E	-	M6	M8	-		-		M10	M12	-	-
		11x85						15x85			
Perforated sleeve FIS H K	12x85	16x85				16x130		20x85			20x130
Group-factor	$\alpha_{g,N}$ ∥ = $\alpha_{g,V}$ ∥ / $\alpha_{g,N}$ ⊥ = $\alpha_{g,V}$ ⊥	[-]	1								

Vertical perforated brick HLz, EN 771-1:2011+A1:2015

Table C17.1: Characteristic resistance under tension loading

Anchor rod			M8	-		M8	M10	M8	M10	-		M12	M12
Internal threaded anchor FIS E			-	M6	M8	-		-		M10	M12	-	-
				11x85						15x85			
Perforated sleeve FIS H K			12x85	16x85				16x130		20x85			20x130
$N_{Rk} = N_{Rk,b} = N_{Rk,p}$ [kN] depending on the compressive strength f_b (temperature range 50/80°C)													
compressive strength f_b	use condition												
10 N/mm²	w/w	w/d	0,9	2,5									3,0
	d/d		0,9	2,5									3,5

Table C17.2: Characteristic resistance under shear loading

Anchor rod			M8	-		M8	M10	M8	M10	-		M12	M12
Internal threaded anchor FIS E			-	M6	M8	-		-		M10	M12	-	-
				11x85						15x85			
Perforated sleeve FIS H K			12x85	16x85				16x130		20x85			20x130
$V_{Rk} = V_{Rk,b} = V_{Rk,c}$ [kN] depending on the compressive strength f_b (temperature range 50/80°C)													
compressive strength f_b	use condition												
10 N/mm²	w/w	w/d	1,2					1,5		1,2			1,5
	d/d												

Factor for job site tests and displacements see annex C 33

Vertical perforated brick HLz, 2DF, EN 771-1:2011+A1:2015

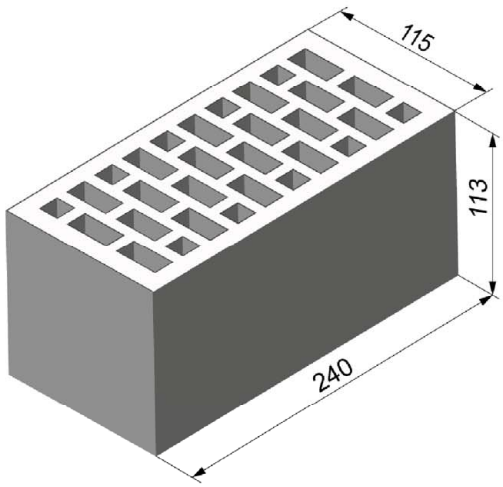

Vertical perforated brick HLz, 2DF, EN 771-1:2011+A1:2015			
Producer	e.g. Wienerberger		
Nominal dimensions [mm]	length L	width W	height H
	240	115	113
Density ρ [kg/dm³]	≥ 1,4		
Compressive strength f_b [N/mm²]	20		
Standard	EN 771-1:2011+A1:2015		

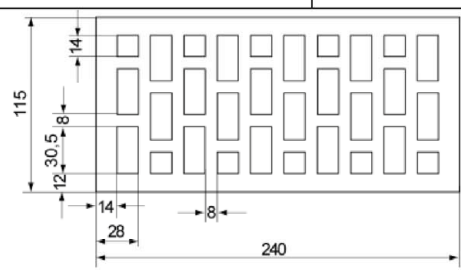

Dimension see also Annex B 11

Table C18.1: Installation parameters

Anchor rod	M8	-		M8	M10	-		M12
Internal threaded anchor FIS E	-	M6	M8	-		M10	M12	-
		11x85				15x85		
Perforated sleeve FIS H K	12x85	16x85				20x85		

Anchor rod and internal threaded anchor FIS E with perforated sleeve FIS H K			
Max. installation torque	max T_{inst}	[Nm]	2
General installation parameters			
Edge distance	c_{min}	[mm]	80
Spacing	s_{cr} ∥ = s_{min} ∥	[mm]	240
	s_{cr} ⊥ = s_{min} ⊥	[mm]	115
Drilling method			
Hammer drilling with hard metal hammer drill			

Table C18.2: Group factors

Anchor rod	M8	-		M8	M10	-		M12
Internal threaded anchor FIS E	-	M6	M8	-		M10	M12	-
		11x85				15x85		
Perforated sleeve FIS H K	12x85	16x85				20x85		

Group factors	$\alpha_{g,N}$ ∥	[-]	2
	$\alpha_{g,V}$ ∥		
	$\alpha_{g,N}$ ⊥		
	$\alpha_{g,V}$ ⊥		

fischer injection system FIS AB for masonry

Performance
Vertical perforated brick HLz, 2DF, dimensions, installation parameters

Annex C 18

Vertical perforated brick HLz, 2DF, EN 771-1:2011+A1:2015

Table C19.1: Characteristic resistance under tension loading

Anchor rod			M8	-		M8	M10	-		M12
Internal threaded anchor FIS E			-	M6	M8	-		M10	M12	-
				11x85				15x85		
Perforated sleeve FIS H K			12x85	16x85				20x85		
$N_{Rk} = N_{Rk,b} = N_{Rk,p}$ [kN] depending on the compressive strength f_b (temperature range 50/80°C)										
compressive strength f_b	use condition									
20 N/mm²	w/w	w/d	3,5	2,5				3,0		
	d/d		4,0	2,5				3,0		

Table C19.2: Characteristic resistance under shear loading

Anchor rod			M8	-		M8	M10	-		M12
Internal threaded anchor FIS E			-	M6	M8	-		M10	M12	-
				11x85				15x85		
Perforated sleeve FIS H K			12x85	16x85				20x85		
$V_{Rk} = V_{Rk,b} = V_{Rk,c}$ [kN] depending on the compressive strength f_b (temperature range 50/80°C)										
compressive strength f_b	use condition									
20 N/mm²	w/w	w/d	7,5	4,0	4,5			8,5		
	d/d									

Factor for job site tests and displacements see annex C 33

Vertical perforated brick HLz, T10, T11, EN 771-1:2011+A1:2015

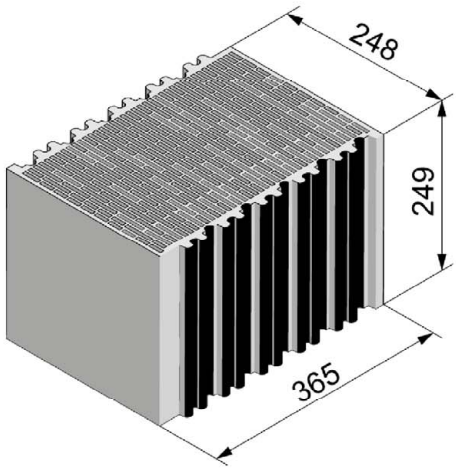

Vertical perforated brick HLz, T10, T11, EN 771-1:2011+A1:2015			
Producer	-		
Nominal dimensions [mm]	length L	width W	height H
	248	365	249
Density ρ [kg/dm³]	0,7		
Compressive strength f_b [N/mm²]	8 / 10 / 12		
Standard	EN 771-1:2011+A1:2015		

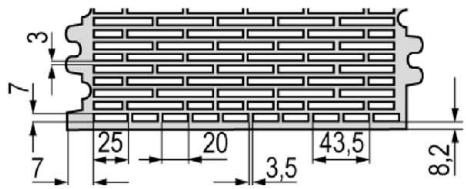

Dimension see also Annex B 11

Table C20.1: Installation parameters
(Pre-positioned anchorage with perforated sleeve FIS H)

Anchor rod	**M8**	**-**		**M8**	**M10**	**M8**	**M10**	**-**		**M12**	**M12**	**M12**
Internal threaded anchor FIS E	-	**M6**	**M8**	-		-		**M10**	**M12**	-	-	-
		11x85						**15x85**				
Perforated sleeve FIS H K	**12x85**	**16x85**				**16x130**		**20x85**			**20x130**	**20x200**

Anchor rod and internal threaded anchor FIS E with perforated sleeve FIS H K							
Max. installation torque	max T_{inst}	[Nm]	3		5	3	5

General installation parameters			
Edge distance	c_{min}	[mm]	60
Spacing	s_{min} ∥		80
	s_{cr} ∥		250
	s_{min} ⊥		80
	s_{cr} ⊥		250

Drilling method
Rotary drilling with carbide drill

Table C20.2: Group factors

Anchor rod	**M8**	**-**		**M8**	**M10**	**M8**	**M10**	**-**		**M12**	**M12**	**M12**
Internal threaded anchor FIS E	-	**M6**	**M8**	-		-		**M10**	**M12**	-	-	-
		11x85						**15x85**				
Perforated sleeve FIS H K	**12x85**	**16x85**				**16x130**		**20x85**			**20x130**	**20x200**

Group factors	$\alpha_{g,N}$ ∥	[-]	1,7
	$\alpha_{g,V}$ ∥		0,5
	$\alpha_{g,N}$ ⊥		1,3
	$\alpha_{g,V}$ ⊥		0,5

Vertical perforated brick HLz, T10, T11, EN 771-1:2011+A1:2015

Table C21.1: Characteristic resistance under tension loading (Pre-positioned anchorage)

Anchor rod	M8	-	M8	M10	M8	M10	-	M12	M12	M12
Internal threaded anchor FIS E	-	M6 / M8 11x85	-		-		M10 / M12 15x85	-	-	-
Perforated sleeve FIS H K	12x85	16x85			16x130		20x85		20x130	20x200

$N_{Rk} = N_{Rk,b} = N_{Rk,p}$ [kN] depending on the compressive strength f_b (temperature range 50/80°C)

compressive strength f_b	use condition		
8 N/mm²	w/w	w/d	1,5
	d/d		2,0
10 N/mm²	w/w	w/d	2,0
	d/d		2,0
12 N/mm²	w/w	w/d	2,0
	d/d		2,5

Factor for job site tests and displacements see annex C 33

Table C21.2: Characteristic resistance under shear loading (Pre-positioned anchorage)

Anchor rod	M8	-	M8	M8	-	M12	M12	M12
Internal threaded anchor FIS E	-	M6 / M8 11x85	-	-	M10 / M12 15x85	-	-	-
Perforated sleeve FIS H K	12x85	16x85		16x130	20x85		20x130	20x200

$V_{Rk} = V_{Rk,b} = V_{Rk,c}$ [kN] depending on the compressive strength f_b (temperature range 50/80°C)

compressive strength f_b	use condition				
8 N/mm²	w/w	w/d	0,9	1,5	2,0
	d/d				
10 N/mm²	w/w	w/d	0,9	1,5	2,0
	d/d				
12 N/mm²	w/w	w/d	1,2	2,0	2,0
	d/d				

Factor for job site tests and displacements see annex C 33

Vertical perforated brick HLz, FZ 7, filled with mineral wool, EN 771-1:2015

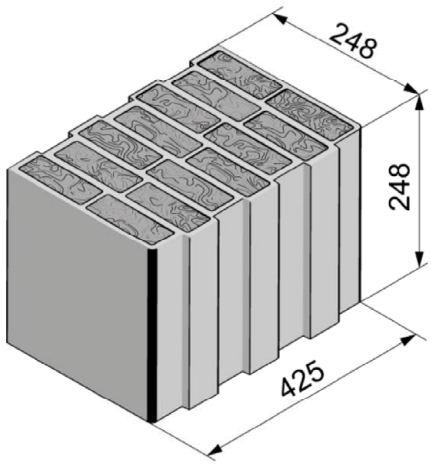

Vertical perforated brick HLz, FZ 7, filled with mineral wool, EN 771-1:2011+A1:2015			
Producer	-		
Nominal dimensions [mm]	length L	width W	height H
	248	425	248
Density ρ [kg/dm³]	0,6		
Compressive strength f_b [N/mm²]	4 / 6 / 8		
Standard	EN 771-1:2011+A1:2015		

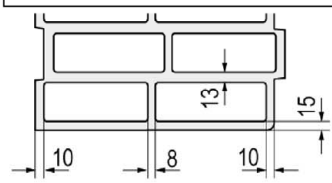

Dimension see also Annex B 12

Table C22.1: Installation parameters
(Pre-positioned anchorage with perforated sleeve FIS H K)

Anchor rod	**M8**	**-**	**M8**	**M10**	**M8**	**M10**	**-**	**M12**	**M12**	**M12**
Internal threaded anchor FIS E	**-**	**M6 / M8**	**-**		**-**		**M10 / M12**	**-**	**-**	**-**
		11x85					**15x85**			
Perforated sleeve FIS H K	**12x85**	**16x85**			**16x130**		**20x85**		**20x130**	**20x200**

Anchor rod and internal threaded anchor FIS E with perforated sleeve FIS H K						
Max. installation torque	max T_{inst}	[Nm]	2	5	2	5
General installation parameters						
Edge distance	c_{min}	[mm]	60			
Spacing	s_{min} ∥	[mm]	80			
	s_{cr} ∥	[mm]	250			
	s_{min} ⊥	[mm]	80			
	s_{cr} ⊥	[mm]	250			
Drilling method						
Rotary drilling with carbide drill						

Table C22.2: Group factors

Anchor rod	**M8**	**-**	**M8**	**M10**	**M8**	**M10**	**-**	**M12**	**M12**	**M12**
Internal threaded anchor FIS E	**-**	**M6 / M8**	**-**		**-**		**M10 / M12**	**-**	**-**	**-**
		11x85					**15x85**			
Perforated sleeve FIS H K	**12x85**	**16x85**			**16x130**		**20x85**		**20x130**	**20x200**

Group factor	$\alpha_{g,N}$ ∥	[-]	1,9
	$\alpha_{g,V}$ ∥	[-]	0,9
	$\alpha_{g,N}$ ⊥	[-]	1,0
	$\alpha_{g,V}$ ⊥	[-]	0,7

Vertical perforated brick HLz, FZ 7, filled with mineral wool, EN 771-1:2011+A1:2015

Table C23.1: Characteristic resistance under tension loading (Pre-positioned anchorage)

Anchor rod		**M8**	**-**	**M8**	**M10**	**M8**	**M10**	**-**	**M12**	**M12**	**M12**
Internal threaded anchor FIS E		**-**	**M6** / **M8**	**-**		**-**		**M10** / **M12**	**-**	**-**	**-**
			11x85					**15x85**			
Perforated sleeve FIS H K		**12x85**	**16x85**			**16x130**		**20x85**		**20x130**	**20x200**
$N_{Rk} = N_{Rk,b} = N_{Rk,p}$ [kN] depending on the compressive strength f_b (temperature range 50/80°C)											
compressive strength f_b	use condition										
4 N/mm²	w/w / w/d	0,75	1,5			2,0		1,2		2,0	2,0
	d/d	0,9	1,5			2,0		1,5		2,0	2,5
6 N/mm²	w/w / w/d	0,9	1,5			2,0		1,5		2,5	2,5
	d/d	0,9	2,0			2,5		2,0		2,5	3,0
8 N/mm²	w/w / w/d	1,2	2,0			2,5		2,0		2,5	3,0
	d/d	1,2	2,0			3,0		2,0		3,0	3,5

Factor for job site tests and displacements see annex C 33

Table C23.1: Characteristic resistance under shear loading (Pre-positioned anchorage)

Anchor rod		**M8**	**-**	**M8**	**M8**	**-**	**M12**	**M12**	**M12**
Internal threaded anchor FIS E		**-**	**M6** / **M8**	**-**	**-**	**M10** / **M12**	**-**	**-**	**-**
			11x85			**15x85**			
Perforated sleeve FIS H K		**12x85**	**16x85**		**16x130**	**20x85**		**20x130**	**20x200**
$V_{Rk} = V_{Rk,b} = V_{Rk,c}$ [kN] depending on the compressive strength f_b (temperature range 50/80°C)									
compressive strength f_b	use condition								
4 N/mm²	w/w / w/d	1,5							1,5
	d/d								
6 N/mm²	w/w / w/d	2,0							1,5
	d/d								
8 N/mm²	w/w / w/d	2,5							2,0
	d/d								

Factor for job site tests and displacements see annex C 33

Vertical perforated brick HLz, EN 771-1:2011+A1:2015

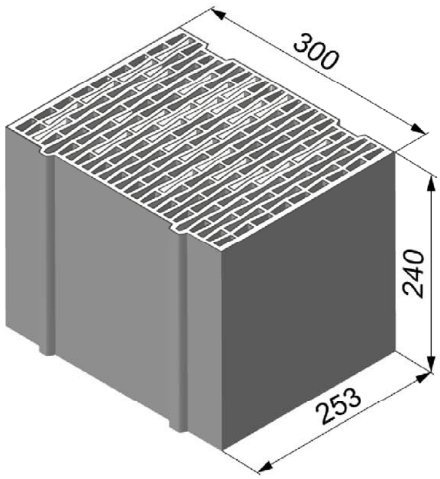

Vertical perforated brick HLz, EN 771-1:2011+A1:2015			
Producer	e.g. Ziegelwerk Brenner		
Nominal dimensions [mm]	length L	width W	height H
	253	300	240
Density ρ [kg/dm³]	≥ 0,8		
Compressive strength f_b [N/mm²]	2 / 4 / 6		
Standard	EN 771-1:2011+A1:2015		

Dimension see also Annex B 12

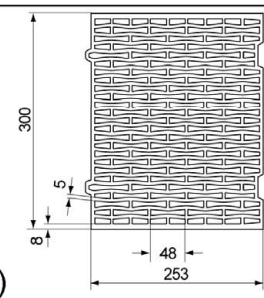

Table C24.1: Installation parameters
(Pre-positioned anchorage with perforated sleeve FIS H K)

Anchor rod		**M8**	**-**		**M8**	**M10**	**M8**	**M10**	**-**		**M12**	**M12**
Internal threaded anchor FIS E		**-**	**M6**	**M8**	**-**		**-**		**M10**	**M12**	**-**	**-**
			11x85						**15x85**			
Perforated sleeve FIS H K		**12x85**	**16x85**				**16x130**		**20x85**			**20x130**
Anchor rod and internal threaded anchor FIS E with perforated sleeve FIS H K												
Max. installation torque	max T_{inst}	[Nm]	2									
General installation parameters												
Edge distance	c_{min}	[mm]	60									
Spacing	s_{min} ∥ = s_{cr} ∥	[mm]	255									
	s_{min} ⊥ = s_{cr} ⊥	[mm]	240									
Drilling method												
Hammer drilling with hard metal hammer drill												

Table C24.2: Group factors

Anchor rod		**M8**	**-**		**M8**	**M10**	**M8**	**M10**	**-**		**M12**	**M12**
Internal threaded anchor FIS E		**-**	**M6**	**M8**	**-**		**-**		**M10**	**M12**	**-**	**-**
			11x85						**15x85**			
Perforated sleeve FIS H K		**12x85**	**16x85**				**16x130**		**20x85**			**20x130**
Group factor	$\alpha_{g,N}$ ∥	[-]	2									
	$\alpha_{g,V}$ ∥	[-]	2									
	$\alpha_{g,N}$ ⊥	[-]	2									
	$\alpha_{g,V}$ ⊥	[-]	2									

Vertical perforated brick HLz, EN 771-1:2011+A1:2015

Table C25.1: Characteristic resistance under tension loading (Pre-positioned anchorage)

Anchor rod			M8	-		M8	M10	M8	M10	-		M12	M12
Internal threaded anchor FIS E			-	M6	M8	-		-		M10	M12	-	-
				11x85						15x85			
Perforated sleeve FIS H K			12x85	16x85				16x130		20x85			20x130
$N_{Rk} = N_{Rk,b} = N_{Rk,p}$ [kN] depending on the compressive strength f_b (temperature range 50/80°C)													
compressive strength f_b	use condition												
2 N/mm²	w/w	w/d	0,5	0,5				0,4		0,5			0,4
	d/d		0,5	0,5				0,5		0,5			0,5
4 N/mm²	w/w	w/d	0,9	0,9				0,9		0,9			0,9
	d/d		0,9	0,9				0,9		0,9			0,9
6 N/mm²	w/w	w/d	1,5	1,5				1,2		1,5			1,2
	d/d		1,5	1,5				1,5		1,5			1,5

Factor for job site tests and displacements see annex C110

Table C25.1: Characteristic resistance under shear loading (Pre-positioned anchorage)

Anchor rod			M8	-		M8	M10	M8	M10	-		M12	M12
Internal threaded anchor FIS E			-	M6	M8	-		-		M10	M12	-	-
				11x85						15x85			
Perforated sleeve FIS H K			12x85	16x85				16x130		20x85			20x130
$V_{Rk} = V_{Rk,b} = V_{Rk,c}$ [kN] depending on the compressive strength f_b (temperature range 50/80°C)													
compressive strength f_b	use condition												
2 N/mm²	w/w	w/d	0,5							0,6			
	d/d												
4 N/mm²	w/w	w/d	0,9							1,2			
	d/d												
6 N/mm²	w/w	w/d	1,5							1,5			
	d/d												

Vertical perforated brick HLz, Porotherm W 44, filled with mineral wool, EN 771-1:2011+A1:2015

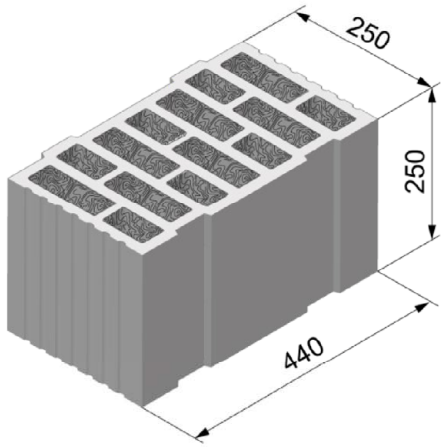

Vertical perforated brick HLz, Porotherm W 44, filled with mineral wool, EN 771-1:2011+A1:2015			
Producer	-		
Nominal dimensions [mm]	length L	width W	height H
	250	440	250
Density ρ [kg/dm³]	0,7		
Compressive strength f_b [N/mm²]	6 / 8 / 10		
Standard	EN 771-1:2011+A1:2015		

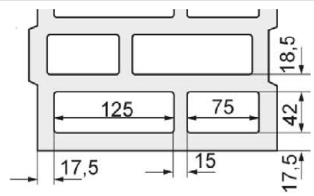

Dimension see also Annex B 12

Table C26.1: Installation parameters
(Pre-positioned anchorage with perforated sleeve FIS H K)

Anchor rod			**M8**	**-**		**M8**	**M10**	**M8**	**M10**	**-**		**M12**	**M12**	**M12**
Internal threaded anchor FIS E			-	**M6**	**M8**	-		-		**M10**	**M12**	-	-	-
				11x85						**15x85**				
Perforated sleeve FIS H K			**12x85**	**16x85**				**16x130**		**20x85**			**20x130**	**20x200**
Anchor rod and internal threaded anchor FIS E with perforated sleeve FIS H K														
Max. installation torque	max T_{inst}	[Nm]	2				5	2	5			6		
General installation parameters														
Edge distance	c_{min}	[mm]	60											
Spacing	s_{min} ∥	[mm]	80											
	s_{cr} ∥	[mm]	250											
	s_{min} ⊥	[mm]	80											
	s_{cr} ⊥	[mm]	250											
Drilling method														
Rotary drilling with carbide drill														

Table C26.2: Group factors

Anchor rod			**M8**	**-**		**M8**	**M10**	**M8**	**M10**	**-**		**M12**	**M12**	**M12**
Internal threaded anchor FIS E			-	**M6**	**M8**	-		-		**M10**	**M12**	-	-	-
				11x85						**15x85**				
Perforated sleeve FIS H K			**12x85**	**16x85**				**16x130**		**20x85**			**20x130**	**20x200**
Group factor	$\alpha_{g,N}$ ∥	[-]	1,3											
	$\alpha_{g,V}$ ∥	[-]	1,3											
	$\alpha_{g,N}$ ⊥	[-]	0,8											
	$\alpha_{g,V}$ ⊥	[-]	1,3											

Vertical perforated brick HLz, Porotherm W 44, filled with mineral wool, EN 771-1:2011+A1:2015

Table C27.1: Characteristic resistance under tension loading (Pre-positioned anchorage)

Anchor rod		**M8**	**-**	**M8**	**M10**	**M8**	**M10**	**-**	**M12**	**M12**	**M12**
Internal threaded anchor FIS E		**-**	**M6** / **11x85**	**M8**	**-**	**-**		**M10** / **15x85**	**M12**	**-**	**-**
Perforated sleeve FIS H K		**12x85**	**16x85**			**16x130**		**20x85**		**20x130**	**20x200**
$N_{Rk} = N_{Rk,b} = N_{Rk,p}$ [kN] depending on the compressive strength f_b (temperature range 50/80°C)											
compressive strength f_b	use condition										
6 N/mm²	w/w w/d	1,5	1,2			1,5				2,5	
	d/d	1,5	1,2			1,5				2,5	
8 N/mm²	w/w w/d	1,5	1,2			1,5				2,5	
	d/d	2,0	1,5			2,0				3,0	
10 N/mm²	w/w w/d	2,0	1,5			2,0				3,0	
	d/d	2,0	1,5			2,0				3,5	

Factor for job site tests and displacements see annex C 33

Table C27.1: Characteristic resistance under shear loading (Pre-positioned anchorage)

Anchor rod		**M8**	**-**	**M8**	**M10**	**M8**	**M10**	**-**	**M12**	**M12**	**M12**
Internal threaded anchor FIS E		**-**	**M6** / **11x85**	**M8**	**-**	**-**		**M10** / **15x85**	**M12**	**-**	**-**
Perforated sleeve FIS H K		**12x85**	**16x85**			**16x130**		**20x85**		**20x130**	**20x200**
$V_{Rk} = V_{Rk,b} = V_{Rk,c}$ [kN] depending on the compressive strength f_b (temperature range 50/80°C)											
compressive strength f_b	use condition										
6 N/mm²	w/w w/d d/d	0,9				1,2		0,9		1,2	1,2
8 N/mm²	w/w w/d d/d	0,9				1,5		0,9		1,5	1,2
10 N/mm²	w/w w/d d/d	1,2				1,5		1,2		1,5	1,5

Factor for job site tests and displacements see annex C 33

Light-weight concrete hollow block Hbl, EN 771-3:2011+A1:2015

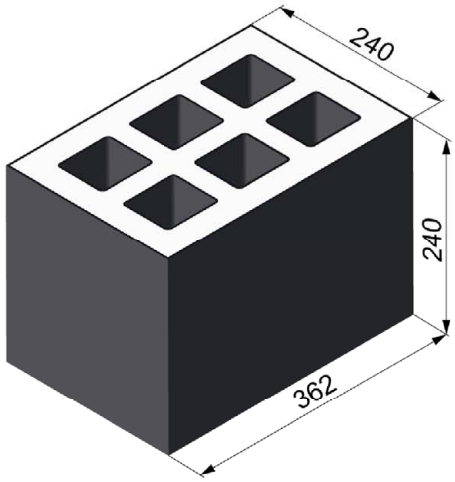

Light-weight concrete hollow block Hbl, EN 771-3:2011+A1:2015			
Producer	-		
Nominal dimensions [mm]	length L	width W	height H
	362	240	240
Density ρ [kg/dm³]	≥ 1,0		
Compressive strength f_b [N/mm²]	4		
Standard	EN 771-3:2011+A1:2015		

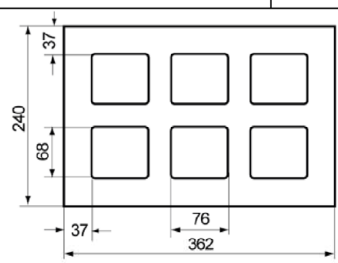

Dimension see also Annex B 12

Table C28.1: Installation parameters
(Pre-positioned anchorage with perforated sleeve FIS H)

Anchor rod	**M8**	**-**	**M8**	**M10**	**M8**	**M10**	**-**	**M12**	**M12**
Internal threaded anchor FIS E	-	**M6** / **M8**	-		-		**M10** / **M12**	-	-
		11x85					**15x85**		
Perforated sleeve FIS H K	**12x85**	**16x85**			**16x130**		**20x85**		**20x130**

Anchor rod and internal threaded anchor FIS E with perforated sleeve FIS H K			
Max. installation torque	max T_{inst}	[Nm]	2
General installation parameters			
Edge distance	c_{min}	[mm]	60
Spacing	s_{min} ∥	[mm]	100
	s_{cr} ∥	[mm]	362
	s_{min} ⊥ = s_{cr} ⊥	[mm]	240
Drilling method			
Hammer drilling with hard metal hammer drill			

Table C28.2: Group factors

Anchor rod	**M8**	**-**	**M8**	**M10**	**M8**	**M10**	**-**	**M12**	**M12**
Internal threaded anchor FIS E	-	**M6** / **M8**	-		-		**M10** / **M12**	-	-
		11x85					**15x85**		
Perforated sleeve FIS H K	**12x85**	**16x85**			**16x130**		**20x85**		**20x130**

Group factors	$\alpha_{g,N}$ ∥	[-]	1,2
	$\alpha_{g,V}$ ∥	[-]	1,1
	$\alpha_{g,N}$ ⊥	[-]	2,0
	$\alpha_{g,V}$ ⊥	[-]	

Light-weight concrete hollow block Hbl, EN 771-3:2011+A1:2015

Table C29.1: Characteristic resistance under tension loading (Pre-positioned anchorage)

Anchor rod	**M8**	**-**	**M8**	**M10**	**M8**	**M10**	**-**	**M12**	**M12**
Internal threaded anchor FIS E	**-**	**M6** / **M8**	**-**		**-**		**M10** / **M12**	**-**	**-**
		11x85					**15x85**		
Perforated sleeve FIS H K	**12x85**	**16x85**			**16x130**		**20x85**		**20x130**

$N_{Rk} = N_{Rk,b} = N_{Rk,p}$ [kN] depending on the compressive strength f_b (temperature range 50/80°C)			
compressive strength f_b	use condition		
4 N/mm²	w/w	w/d	3,0
	d/d		3,0

Table C29.2: Characteristic resistance under shear loading (Pre-positioned anchorage)

Anchor rod	**M8**	**-**	**M8**	**M10**	**M8**	**M10**	**-**	**M12**	**M12**
Internal threaded anchor FIS E	**-**	**M6** / **M8**	**-**		**-**		**M10** / **M12**	**-**	**-**
		11x85					**15x85**		
Perforated sleeve FIS H K	**12x85**	**16x85**			**16x130**		**20x85**		**20x130**

$V_{Rk} = V_{Rk,b} = V_{Rk,c}$ [kN] depending on the compressive strength f_b (temperature range 50/80°C)			
compressive strength f_b	use condition		
4 N/mm²	w/w	w/d	2,0
	d/d		

Factor for job site tests and displacements see annex C 33

Autoclaved aerated concrete, EN 771-4:2011+A1:2015

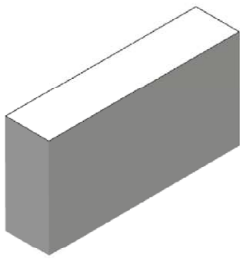

Autoclaved aerated concrete, EN 771-4:2011+A1:2015				
Producer		e.g. Ytong		
Density ρ	[kg/dm³]	0,35	0,5	0,65
Compressive strength f_b	[N/mm²]	2	4	6
Standard		EN 771-4:2011+A1:2015		

Table C30.1: Installation parameters

Anchor rod			**M8**		**M10**		**M12**		**-**		**-**	
Internal threaded anchor FIS E			**-**		**-**		**-**		**M6**	**M8**	**M10**	**M12**
									11x85		**15x85**	
Anchor rod and internal threaded anchor FIS E without perforated sleeve												
Effective anchorage depth	h_{ef}	[mm]	100	200	100	200	100	200	85			
Max. installation torque	max T_{inst}	[Nm]	1	8	2	12	2	16	1		2	
General installation parameters												
Edge distance	c_{min}	[mm]	100									
Spacing	s_{cr} II = s_{min} II	[mm]	250									
	h_{ef}=200mm s_{min} II	[mm]	80									
	h_{ef}=200mm s_{cr} II	[mm]	3x h_{ef}									
	s_{cr} ⊥ = s_{min} ⊥	[mm]	250									
	h_{ef}=200mm s_{min}⊥	[mm]	80									
	h_{ef}=200mm s_{cr} ⊥	[mm]	3x h_{ef}									
Drilling method												
Hammer drilling with hard metal hammer drill												

Table C31.1: Group factors for autoclaved aerated concrete (Compressive strength f_b =2 N/mm²)

Anchor rod			M8	M10	M12	-		-	
Internal threaded anchor FIS E			-	-	-	M6	M8	M10	M12
						11x85		15x85	
Group factors	h_{ef}=200 $\alpha_{g,N}$ II	[-]	1,6			-[1]		-[1]	
	h_{ef}=200 $\alpha_{g,V}$ II		1,1			-[1]		-[1]	
	$\alpha_{g,N}$ II, $\alpha_{g,V}$ II		2						
	h_{ef}=200 $\alpha_{g,N}\perp$		1,6			-[1]		-[1]	
	h_{ef}=200 $\alpha_{g,V}\perp$		0,8			-[1]		-[1]	
	$\alpha_{g,N}\perp$, $\alpha_{g,V}\perp$		2						

[1] No performance assessed

Table C31.2: Group factors for autoclaved aerated concrete (Compressive strength f_b =4 N/mm²)

Anchor rod			M8	M10	M12	-		-	
Internal threaded anchor FIS E			-	-	-	M6	M8	M10	M12
						11x85		15x85	
Group factors	h_{ef}=200 $\alpha_{g,N}$ II	[-]	0,7			-[1]		-[1]	
	h_{ef}=200 α_{gV} II		2,0			-[1]		-[1]	
	$\alpha_{g,N}$ II, α_{gV} II		2						
	h_{ef}=200 $\alpha_{g,N}\perp$		0,7			-[1]		-[1]	
	h_{ef}=200 $\alpha_{g,V}\perp$		1,2			-[1]		-[1]	
	$\alpha_{g,N}\perp$, $\alpha_{gV}\perp$		2						

[1] No performance assessed

Table C31.3: Group factors for autoclaved aerated concrete (Compressive strength f_b =6 N/mm²)

Anchor rod			M8	M10	M12	-		-	
Internal threaded anchor FIS E			-	-	-	M6	M8	M10	M12
						11x85		15x85	
Group factors	h_{ef}=200 $\alpha_{g,N}$ II	[-]	0,7			-[1]		-[1]	
	h_{ef}=200 $\alpha_{g,V}$ II		2,0			-[1]		-[1]	
	$\alpha_{g,N}$ II, $\alpha_{g,V}$ II		2						
	h_{ef}=200 $\alpha_{g,N}\perp$		0,7			-[1]		-[1]	
	h_{ef}=200 $\alpha_{g,V}\perp$		1,2			-[1]		-[1]	
	$\alpha_{g,N}\perp$, $\alpha_{g,V}\perp$		2						

[1] No performance assessed

Autoclaved aerated concrete, EN 771-4:2011+A1:2015

Table C32.1: Characteristic resistance under tension loading

Anchor rod		M8		M10		M12		-		-	
Internal threaded anchor FIS E		-		-		-		M6	M8	M10	M12
								11x85		15x85	
$N_{Rk} = N_{Rk,b} = N_{Rk,p}$ [kN] depending on the compressive strength f_b (temperature range 50/80°C)											
compressive strength f_b	use condition	Effective anchorage depth h_{ef} [mm]									
		100	200	100	200	100	200	85			
2 N/mm²	w/w w/d	1,5	2,0	1,5	3,0	1,5	3,0	1,5		1,5	
	d/d	1,5	3,0	1,5	3,5	2,0	4,0	1,5		1,5	
4 N/mm²	w/w w/d	2,0	1,5	2,5	3,5	2,5	3,5	2,0		1,5	
	d/d	2,0	3,0	3,0	5,0	2,5	5,0	2,0		1,5	
6 N/mm²	w/w w/d	3,0	2,5	4,5	5,0	4,5	7,0	3,5		2,5	
	d/d	3,5	4,0	5,0	7,0	5,0	9,0	3,5		2,5	

Table C32.2: Characteristic resistance under shear loading

Anchor rod		M8		M10		M12		-		-	
Internal threaded anchor FIS E		-		-		-		M6	M8	M10	M12
								11x85		15x85	
$V_{Rk} = V_{Rk,b} = V_{Rk,c}$ [kN] depending on the compressive strength f_b (temperature range 50/80°C)											
compressive strength f_b	use condition	Effective anchorage depth h_{ef} [mm]									
		100	200	100	200	100	200	85			
2 N/mm²	w/w w/d d/d	1,2	1,2	1,2	1,2	1,5	1,2	1,2		1,5	
4 N/mm²	w/w w/d d/d	2,5	2,0	2,0	2,0	2,5	2,0	2,0		2,5	
6 N/mm²	w/w w/d d/d	3,0	2,5	3,0	3,0	3,5	4,0	2,5		3,5	

Factor for job site tests and displacements see annex C 33

β-factors for job site tests; displacements

Table C33.1: β-factors for job site tests

use condition		w/w and w/d	d/d
temperature range		50/80	50/80
Material	Size		
solid units	M8	0,57	0,96
	M10	0,59	
	M12 FIS E 11x85	0,60	
	FIS E 15x85	0,62	
	FIS H 16x85 K	0,55	
hollow units	all sizes	0,86	0,96
Autoclaved aerated concrete cylindrical drill hole	all sizes	0,73	0,81

Table C33.2: Displacements

Material	N [kN]	δN_0 [mm]	δN_∞ [mm]	V [kN]	δV_0 [mm]	δV_∞ [mm]
solid units and autoclaved aerated concrete h_{ef}=100mm	$\frac{N_{Rk}}{1,4 * \gamma_{Mm}}$	0,03	0,06	$\frac{V_{Rk}}{1,4 * \gamma_{Mm}}$	0,82	0,88
hollow units	$\frac{N_{Rk}}{1,4 * \gamma_{Mm}}$	0,48	0,96	$\frac{V_{Rk}}{1,4 * \gamma_{Mm}}$	1,71	2,56
solid brick Mz NF annex C 4 - C 7	$\frac{N_{Rk}}{1,4 * \gamma_{Mm}}$	0,74	1,48	$\frac{V_{Rk}}{1,4 * \gamma_{Mm}}$	1,23	1,85
solid brick KS NF annex C 14 / C 15	$\frac{N_{Rk}}{1,4 * \gamma_{Mm}}$	0,20	0,40	$\frac{V_{Rk}}{1,4 * \gamma_{Mm}}$	0,91	1,37
AAC h_{ef}=200 mm annex C 30 - C 33	$\frac{N_{Rk}}{1,4 * \gamma_{Mm}}$	1,03	2,06	$\frac{V_{Rk}}{1,4 * \gamma_{Mm}}$	1,25	1,88

For anchorage in autoclaved aerated concrete, the partial factor γ_{MAAC} shall be used instead of γ_{Mm}.