DECLARATION OF PERFORMANCE

DoP 0412

for fischer injection system FIS EB II (Mortar for post-installed rebar connections) EN

1. Unique identification code of the product-type: **DoP 0412**

2. Intended use/es: **System for post-installed rebar connection, see appendix, especially annexes B1-B12.**

3. Manufacturer: **fischerwerke GmbH & Co. KG, Otto-Hahn-Straße 15, 79211 Denzlingen, Germany**

4. Authorised representative: **–**

5. System/s of AVCP: **1**

6. European Assessment Document: **EAD 330087-01-0601**
   European Technical Assessment: **ETA-21/0470; 2026-01-22**
   Technical Assessment Body: **DIBt- Deutsches Institut für Bautechnik**
   Notified body/ies: **2873 TU Darmstadt**

7. Declared performance/s:

Mechanical resistance and stability (BWR 1)

Characteristic resistance under static and quasi-static loading:

Bond strength of post-installed rebar: Annex C2
Bond efficiency factor: Annex C1
Amplification factor for minimum anchorage length: Annex C1
Characteristic resistance to steel failure for rebar tension anchors: Annex C1

Characteristic resistance under seismic loading:

Bond strength under seismic loading, Seismic bond efficiency factor: NPD
Minimum concrete cover under seismic loading: NPD

Safety in case of fire (BWR 2)

Reaction to fire: Class (A1)

Resistance to fire:

Bond strength at increased temperature for post-installed rebar assessed for 50 years: Annex C3
Bond strength at increased temperature for post-installed rebar assessed for 100 years: NPD
Characteristic resistance to steel failure for rebar tension anchors under fire exposure: Annex C2

8. Appropriate Technical Documentation and/or Specific Technical Documentation: **–**

The performance of the product identified above is in conformity with the set of declared performance/s. This declaration of performance is issued, in accordance with Regulation (EU) No 305/2011, under the sole responsibility of the manufacturer identified above.

Signed for and on behalf of the manufacturer by:

i.V.

Dr. Christian Weber, Head of Development

Dieter Pfaff, Head of International Production Federation and Quality Management

Tumlingen, 2026-07-01

This DoP has been prepared in different languages. In case there is a dispute on the interpretation the English version shall always prevail.
The Appendix includes voluntary and complementary information in English language exceeding the (language-neutrally specified) legal requirements.

Translation guidance Essential Characteristics and Performance Parameters for Annexes

Mechanical resistance and stability (BWR 1)		
	Characteristic resistance under static and quasi-static loading:	
1	Bond strength of post-installed rebar:	$f_{bd,PIR}$ [N/mm^2], $f_{bd,PIR,100y}$ [N/mm^2]
2	Bond efficiency factor:	k_b [-], $k_{b,100y}$ [-]
3	Amplification factor for minimum anchorage length:	α_{lb} [-], $\alpha_{lb,100y}$ [-]
4	Characteristic resistance to steel failure for rebar tension anchors:	$N_{Rk,s}$ [kN]
	Characteristic resistance under seismic loading:	
5	Bond strength under seismic loading, Seismic bond efficiency factor:	$f_{bd,PIR,seis}$ [N/mm^2], $k_{b,seis}$ [-], $f_{bd,PIR,seis,100y}$ [N/mm^2], $k_{b,seis,100y}$ [-]
6	Minimum concrete cover under seismic loading:	$c_{min,seis}$ [mm]
Safety in case of fire (BWR 2)		
7	Reaction to fire:	Class
	Resistance to fire:	
8	Bond strength at increased temperature for post-installed rebar assessed for 50 years:	$f_{bd,fi}(\theta)$ [N/mm^2], $k_{fi}(\theta)$ [-], θ_{max} [^{o}C]
9	Bond strength at increased temperature for post-installed rebar assessed for 100 years:	$f_{bd,fi,100y}(\theta)$ [N/mm^2], $k_{fi,100y}(\theta)$ [-], θ_{max} [^{o}C]
10	Characteristic resistance to steel failure for rebar tension anchors under fire exposure:	$N_{Rk,s,fi}$ [kN]

Specific Part

1 Technical description of the product

The subject of this European Technical Assessment is the post-installed connection, by anchoring or overlap connection joint, of reinforcing bars (rebars) in existing structures made of normal weight concrete, using the "Rebar connection with fischer injection system FIS EB II" in accordance with the regulations for reinforced concrete construction.
Reinforcing bars made of steel with a diameter ϕ from 8 to 32 mm or the fischer rebar anchor FRA or FRA HCR of sizes M12 to M24 according to Annex A and injection mortar FIS EB II are used for rebar connections. The rebar is placed into a drilled hole filled with injection mortar and is anchored via the bond between rebar, injection mortar and concrete.

The product description is given in Annex A.

2 Specification of the intended use in accordance with the applicable European assessment Document

The performances given in Section 3 are only valid if the rebar connection is used in compliance with the specifications and conditions given in Annex B.

The verifications and assessment methods on which this European Technical Assessment is based lead to the assumption of a working life of the rebar connections of at least 50 years. The indications given on the working life cannot be interpreted as a guarantee given by the producer, but are to be regarded only as a means for choosing the right products in relation to the expected economically reasonable working life of the works.

3 Performance of the product and references to the methods used for its assessment

3.1 Mechanical resistance and stability (BWR 1)

Essential characteristic	Performance
Characteristic resistance under static and quasi-static loading	See Annex C1 and C2
Characteristic resistance under seismic loading	No performance assessed

3.2 Safety in case of fire (BWR 2)

Essential characteristic	Performance
Reaction to fire	Class A1
Resistance to fire	See Annex C 3

4 Assessment and verification of constancy of performance (AVCP) system applied, with reference to its legal base

In accordance with European Assessment Document EAD No. 330087-01-0601, the applicable European legal act is: [96/582/EC].

The system to be applied is: 1

Installation conditions and application examples reinforcing bars, part 1

Figure A1.1:

Overlap joint with existing reinforcement for rebar connections of slabs and beams

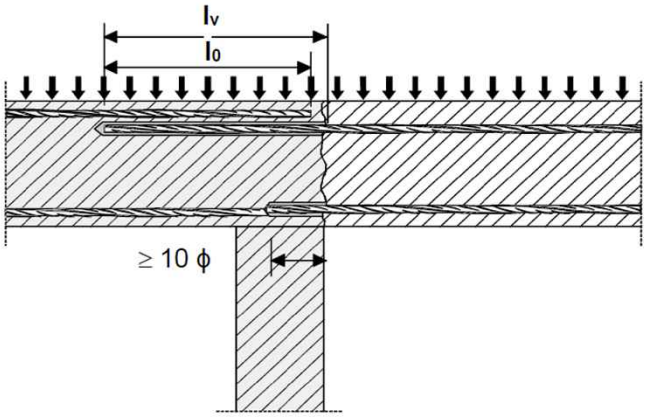

Figure A1.2:

Overlap joint with existing reinforcement at a foundation of a column or wall where the rebars are stressed

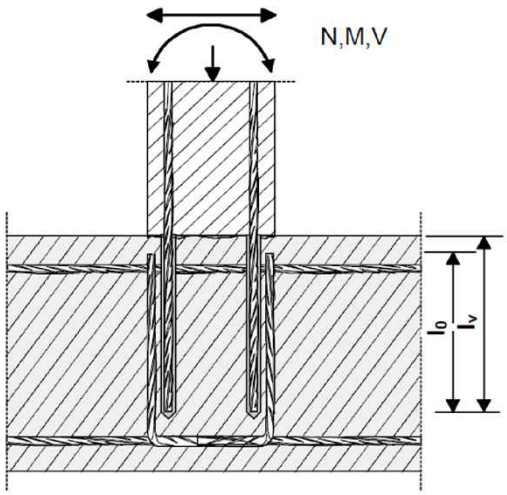

Figure A1.3:

End anchoring of slabs or beams (e.g. designed as simply supported)

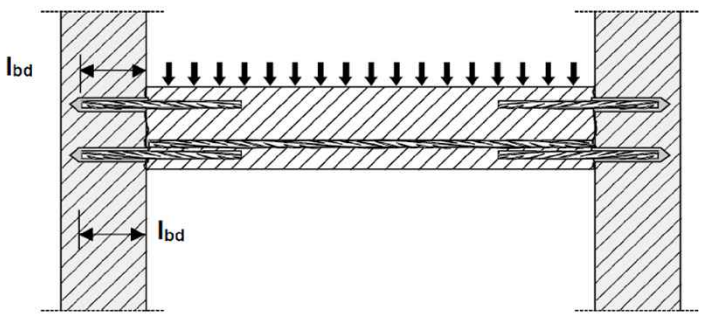

Figures not to scale

Installation conditions and application examples reinforcing bars, part 2

Figure A2.1:

Rebar connection for components stressed primarily in compression

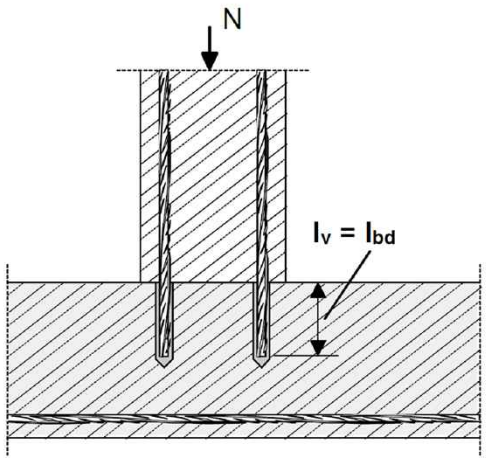

Figure A2.2:

Anchoring of reinforcement to cover the line of acting tensile force in the bending member

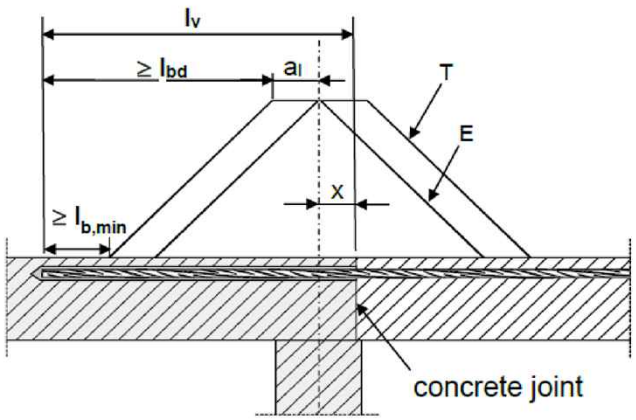

(only post-installed rebar is plotted)

Key to Figure

T	Acting tensile force
E	Envelope of $M_{ed} / z + N_{ed}$ (see EN 1992-1-1:2011)
x	Distance between the theoretical point of support and concrete joint

Note to **figure A1.1** to **A1.3** and **figure A2.1** to **A2.2**

In the figures no traverse reinforcement is plotted, the transverse reinforcement as required by EN 1992-1-1:2011 shall be present.

The shear transfer between old and new concrete shall be designed according to EN 1992-1-1:2011 Preparation of joints according to **Annex B 3** of this document.

Figures not to scale

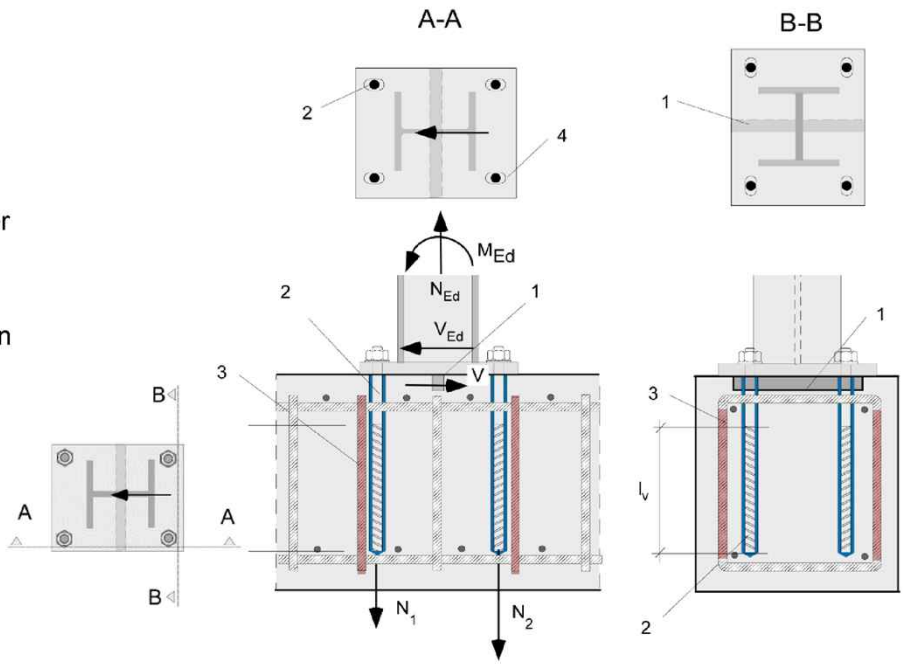

Figure A3.1:

Lap to a foundation of a column under bending.

1. Shear lug (or fastener loaded in shear)
2. fischer rebar anchor (tension only)
3. Existing stirrup / reinforcement for overlap (lap splice)
4. Slotted hole

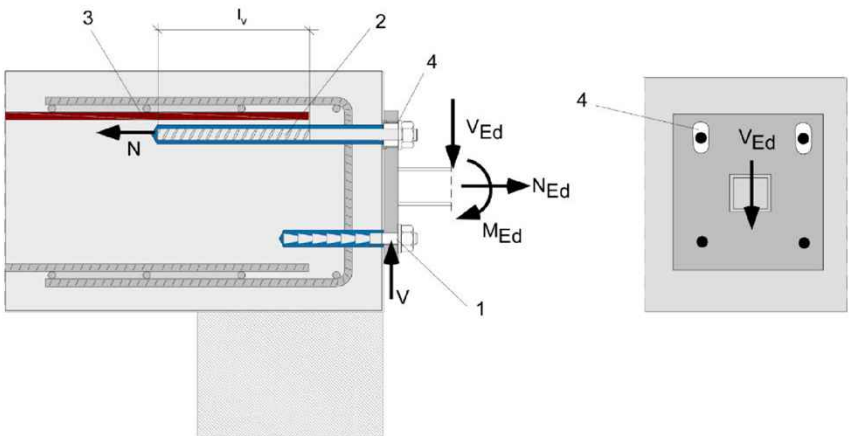

Figure A3.2:

Lap of the anchoring of guardrail posts or anchoring of cantilevered building components.
In the anchor plate, the drill holes for the fischer rebar anchors have to be designed as slotted holes with axial direction to the shear force.

1. Fastener for shear load transfer
2. fischer rebar anchor (tension only)
3. Existing stirrup / reinforcement for overlap (lap splice)
4. Slotted hole

The required transverse reinforcement acc. to EN 1992-1-1:2011 is not shown in the figures. **The fischer rebar anchor FRA / FRA HCR may be only used for axial tensile force.** The tensile force must be transferred by lap to the existing reinforcement of the building. The transfer of the shear force has to be ensured by suitable measures, e.g. by means of shear force or anchors with European Technical Assessment (ETA).

Figures not to scale

Overview system components part 1

Injection cartridge (shuttle cartridge) FIS EB II with sealing cap
Sizes: 390 ml, 585 ml, 1500 ml (the 390 ml hard cartridge is shown as an example)
Size foil bag: 500 ml

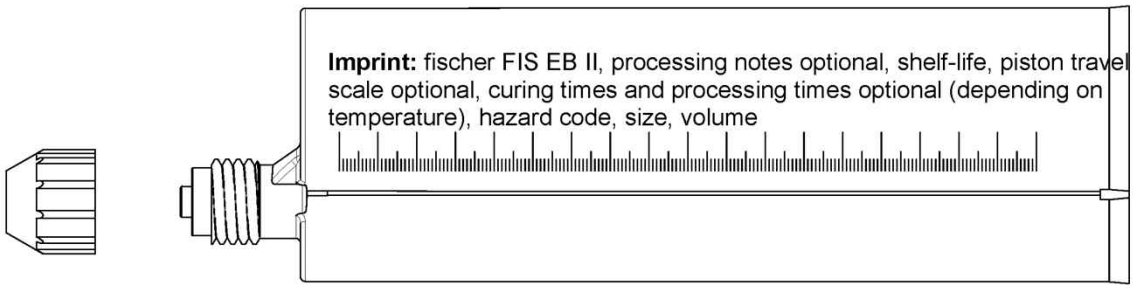

Injection cartridge (coaxial cartridge) FIS EB II with sealing cap
Sizes: 300 ml

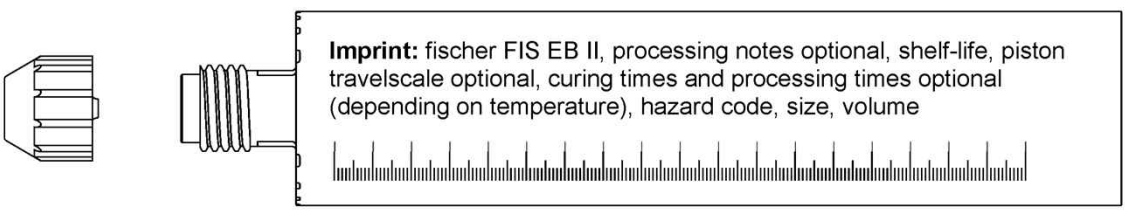

Static mixer FIS MR Plus for injection cartridges ≤ 500 ml

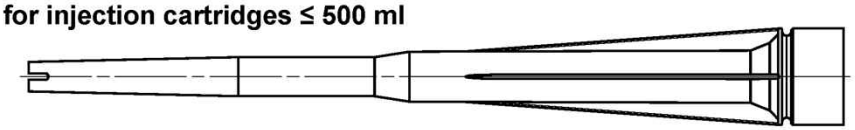

Static mixer FIS UMR for injection cartridges ≥ 500 ml

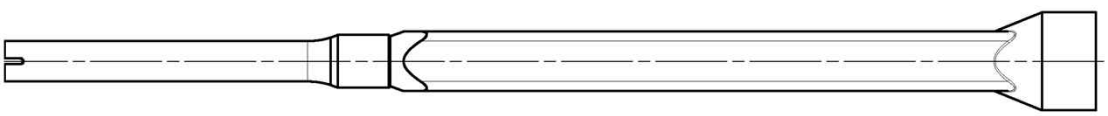

Injection adapter and extension tube Ø 9 for static mixer FIS MR Plus;
Injection adapter and extension tube Ø 9 or Ø 15 for static mixer FIS UMR

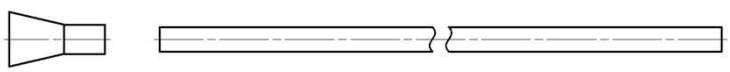

Blow out pump AB G



Compressed-air cleaning tool ABP with compressed-air nozzle



Figures not to scale

Rebar connection with fischer injection system FIS EB II

Product description
Overview system components part 1:
injection mortar, static mixer, injection adapter, blow out pump

Annex A4
Appendix 5 / 22

Overview system components part 2

Reinforcing bar (rebar); Sizes: ϕ8, ϕ10, ϕ12, ϕ14, ϕ16, ϕ20, ϕ25, ϕ26, ϕ28, ϕ30, ϕ32

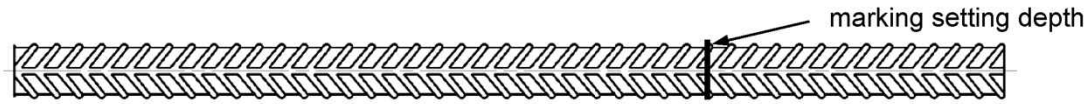

fischer rebar anchor FRA, FRA HCR; Sizes: M12, M16, M20, M24

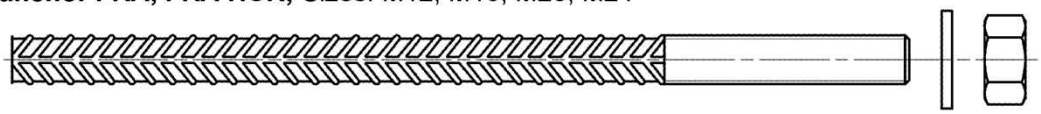

Figures not to scale

Properties of reinforcing bars (rebar)

Figure A5.1:

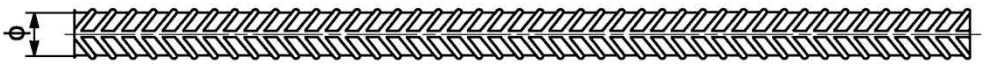

- The minimum value of related rib area $f_{R,min}$ according to EN 1992-1-1:2011
- The maximum outer rebar diameter over the ribs shall be:
  - The nominal diameter of the bar with rib $\phi + 2 \cdot h$ ($h \leq 0{,}07 \cdot \phi$)
  - (ϕ: Nominal diameter of the bar; h_{rib} = rib height of the bar)

Table A5.1: Installation conditions for rebars

Nominal diameter of the bar		**ϕ**	**8[1)]**		**10[1)]**		**12[1)]**		**14**	**16**	**20**	**25**	**26**	**28**	**30**	**32**
Nominal drill hole diameter	d_0	[mm]	10	12	12	14	14	16	18	20	25	30	35	35	40	40
Drill hole depth	h_0		$h_0 = l_v$													
Effective embedment depth	l_v		acc. to static calculation													
Minimum thickness of concrete member	h_{min}		$l_v + 30$ (≥ 100)						$l_v + 2d_0$							

[1)] Both drill hole diameters can be used

Table A5.2: Materials of rebars

Designation	**Reinforcing bar (rebar)**
Reinforcing bar EN 1992-1-1:2011, Annex C	Bars and de-coiled rods class B or C with f_{yk} and k according to NDP or NCI of EN 1992-1-1/NA $f_{uk} = f_{tk} = k \cdot f_{yk}$

Properties of fischer rebar anchors

Figure A6.1:

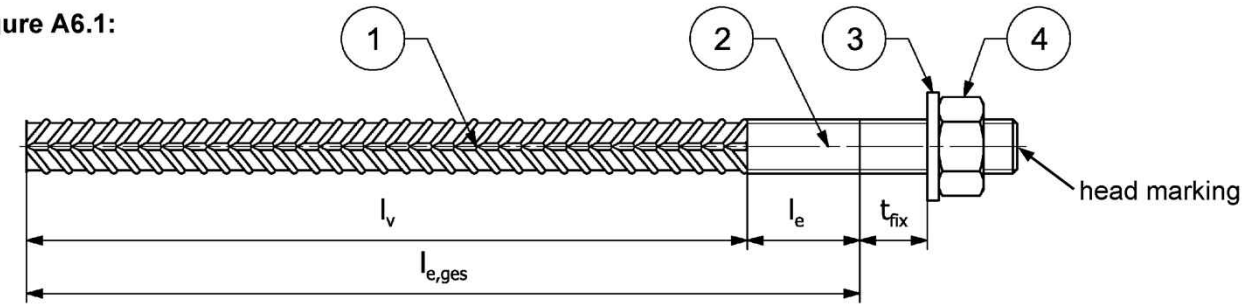

Head marking e.g.: FRA (for stainless steel)

FRA HCR (for high corrosion-resistant steel)

Table A6.1: Installation conditions for fischer rebar anchors

Thread diameter				**M12** [2]		**M16**	**M20**	**M24**
Nominal diameter		ϕ	[mm]	12		16	20	25
Nominal drill bit diameter		d_0	[mm]	14	16	20	25	30
Drill hole depth ($h_0 = l_{e,ges}$)		$l_{e,ges}$	[mm]	$l_v + l_e$				
Effective embedment depth		l_v	[mm]	acc. to static calculation				
Distance concrete surface to welded joint		l_e	[mm]	100				
Diameter of clearance hole in the fixture[1]	Pre-positioned ≤ d_f		[mm]	14		18	22	26
	Push through ≤ d_f		[mm]	16	18	22	26	32
Minimum thickness of concrete member		h_{min}	[mm]	h_0+30 (≥ 100)		$h_0 + 2d_0$		
Maximum torque moment for attachment of the fixture		max T_{inst}	[Nm]	50		100	150	150

[1] For bigger clearance holes in the fixture see EN 1992-4:2018

[2] Both drill bit diameters can be used

Table A6.2: Materials of fischer rebar anchors

Part	Description	Materials	
		FRA Corrosion resistance class CRC III acc. to EN 1993-1-4:2006+A1:2015	FRA HCR Corrosion resistance class CRC V acc. to EN 1993-1-4:2006+A1:2015
1	Reinforcing bar	Bars and de-coiled rods class B or C with f_{yk} and k according to NDP or NCI of EN 1992-1-1:NA; $f_{uk} = f_{tk} = k \cdot f_{yk;}$ (f_{yk} = 500 N/mm²)	
2	Round bar with partial or full thread	Stainless steel, strength class 80, according to EN 10088-1:2023	High corrosion-resistant steel, strength class 80,according to EN 10088-1:2023
3	Washer ISO 7089:2000	Stainless steel, according to EN 10088-1:2023	High corrosion-resistant steel, according to EN 10088-1:2023
4	Hexagon nut	Stainless steel, strength class 80, acc. to EN ISO 3506-2:2020, according to EN 10088-1:2023	High corrosion-resistant steel, strength class 80, acc. to EN ISO 3506-2:2020, according to EN 10088-1:2023

Specifications of intended use part 1

Table B1.1: Overview use and performance categories

Fastenings subject to		FIS EB II with …			
		Reinforcing bar 		fischer rebar anchor 	
Hammer drilling with standard drill bit or compressed air drilling		all sizes			
Use category	I1 dry or wet concrete	all sizes			
Characteristic resistance under static and quasi static loading,	in cracked concrete	all sizes	Tables: C1.1 C1.2 C2.1	all sizes	Tables: C1.1 C1.2 C1.3 C1.4 C2.1 C2.2
	in uncracked concrete				
Characteristic resistance under seismic loading		-[1]		-[1]	
Installation direction		D3 (downward and horizontal and upwards (e.g. overhead))			
Installation temperature		$T_{i,min}$ = +5 °C to $T_{i,max}$ = +40 °C			
Service temperature	Temperature range	-40°C to +80°C		(max. short term temperature +80°C; max long term temperature +50°C)	
Resistance to fire		all sizes	Annex C 3	all sizes	Table C2.2

[1] No performance assessed

Specifications of intended use part 2

Anchorages subject to:

- Static and quasi-static loading: reinforcing bar (rebar) size 8 mm to 32 mm
- Resistance to fire

Base materials:

- Compacted reinforced or unreinforced normal weight concrete without fibres according to EN 206:2013+A2:2021.
- Strength classes C12/15 to C50/60 according to EN 206:2013+A2:2021.
- Maximum chloride content of 0,40 % (CL 0.40) related to the cement content according to EN 206:2013+A2:2021.
- Non-carbonated concrete
  Note: In case of a carbonated surface of the existing concrete structure, the carbonated layer shall be removed in the area of the post-installed rebar connection with a diameter of ϕ + 60 mm prior to the installation of the new rebar. The depth of concrete to be removed shall correspond to at least the minimum concrete cover in accordance with EN1993-1-1:2011. The foregoing may be neglected if building components are new and not carbonated and if building components are in dry conditions.

Use conditions (Environmental conditions) for fischer rebar anchors:

- For all conditions according to EN 1993-1-4:2006+A1:2015 corresponding to corrosion resistance classes to Annex A6 Table A6.2.

Design:

- The structural design according to EN 1992-1-1:2011; EN 1992-1-2:2011 and **Annex B3 and B4** are conducted under the responsibility of a designer experienced in the field of anchorages and concrete work.
- Verifiable calculation notes and drawings are prepared taking account of the forces to be transmitted.
- The actual position of the reinforcement in the existing structure shall be determined on the basis of the construction documentation and taken into account when designing.

Installation:

- The installation of post-installed rebar respectively fischer rebar anchor shall be done only by suitable trained installer and under supervision on site; the conditions under which an installer may be considered as suitable trained and the conditions for Supervision on site are up to the member states in which the installation is done.
- Check the position of the existing rebars (if the position of existing rebars is not known, it shall be determined using a rebar detector suitable for this purpose as well as on the basis of the construction documentation and then marked on the building component for the overlap joint).

General construction rules for post-installed rebars

Figure B3.1:

- Only tension forces in the axis of the rebar may be transmitted.
- The transfer of shear forces between new concrete and existing structure shall be designed additionally according to EN 1992-1-1:2011.
- The joints for concreting must be roughened to at least such an extent that aggregate protrude.

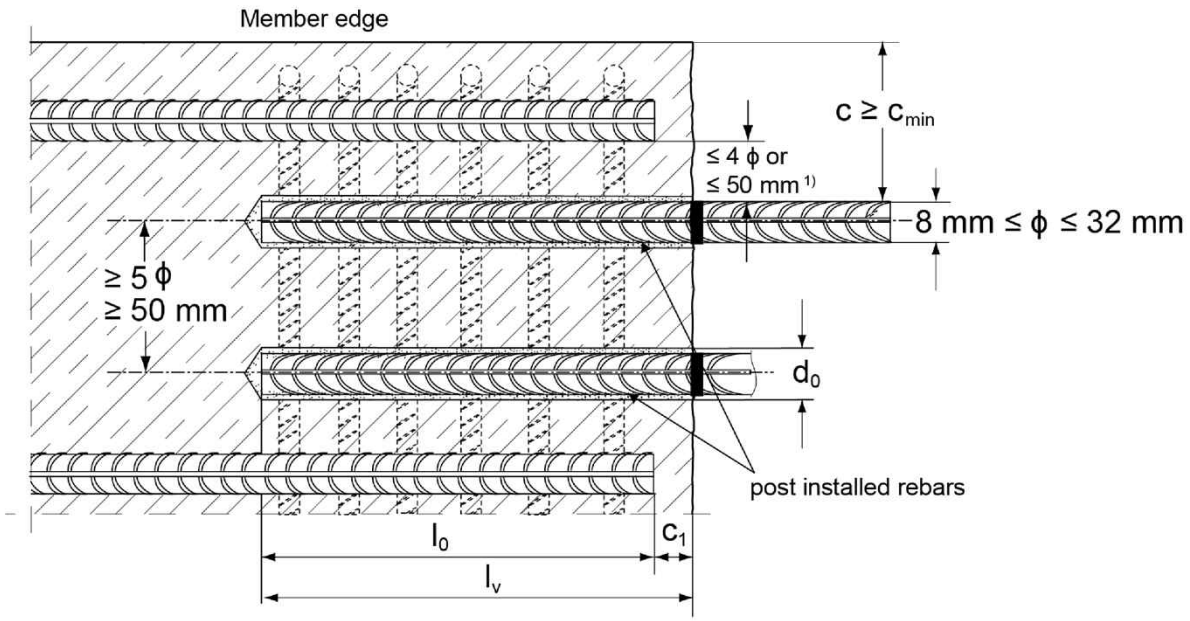

[1] If the clear distance between lapped bars exceeds 4 ϕ or 50 mm then the lap length shall be increased by the difference between the clear bar distance and the smaller 4 ϕ or 50 mm.

c	concrete cover of post-installed rebar
c_1	concrete cover at end-face of existing rebar
c_{min}	minimum concrete cover according to **Table B5.1** and to EN 1992-1-1:2011, Section 4.4.1.2
ϕ	nominal diameter of reinforcing bar
l_0	lap length, according to EN 1992-1-1:2011
l_v	effective embedment depth, $\geq l_0 + c_1$
d_0	nominal drill bit diameter, see **Annex B6**

Figures not to scale

General construction rules for post-installed fischer rebar anchors

Figure B4.1:

- Only tension forces in the axis of the fischer rebar anchor may be transmitted.
- The tension force must be transferred via an overlap joint to the reinforcement in the building part.
- The transmission of the shear loading shall be ensured by appropriate additional measures, e.g. by shear lugs or by anchors with a European Technical Assessment (ETA).
- In the anchor plate, the holes for the tension anchor shall be executed as slotted holes with the axis in the direction of the shear force.

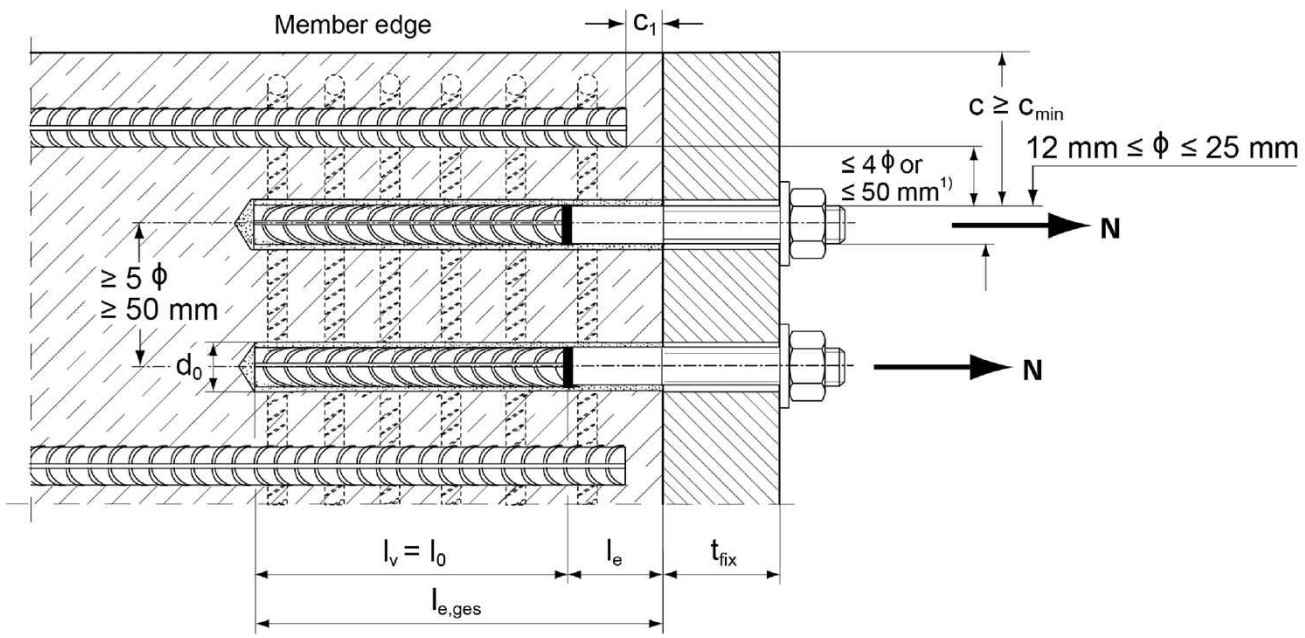

[1] If the clear distance between lapped bars exceeds 4 ϕ or 50 mm then the lap length shall be increased by the difference between the clear bar distance and the smaller 4 ϕ or 50 mm.

c	concrete cover of post-installed fischer rebar anchor
c_1	concrete cover at end-face of existing rebar
c_{min}	minimum concrete cover according to **Table B5.1** and to EN 1992-1-1:2011, Section 4.4.1.2
ϕ	nominal diameter of reinforcing bar
l_0	lap length, according to EN 1992-1-1:2011, Section 8.7.3
$l_{e,ges}$	overall embedment depth, ≥ l_0 + l_e
d_0	nominal drill bit diameter, see **Annex B6**
l_e	length of the bonded in threaded part
t_{fix}	thickness of the fixture
l_v	effective embedment depth

Figures not to scale

Table B5.1: Minimum concrete cover c_{min} [1] depending on the drilling method and the drilling tolerance

Drilling method	nominal diameter of reinforcing bar ϕ [mm]	Minimum concrete cover c_{min} Without drilling aid [mm]	With drilling aid [mm]	
Hammer drilling with standard drill bit	< 25	30 mm + 0,06 l_v ≥ 2 ϕ	30 mm + 0,02 l_v ≥ 2 ϕ	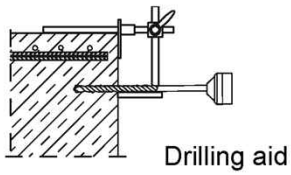 Drilling aid
	≥ 25	40 mm + 0,06 l_v ≥ 2 ϕ	40 mm + 0,02 l_v ≥ 2 ϕ	
Compressed air drilling	< 25	50 mm + 0,08 l_v	50 mm + 0,02 l_v	
	≥ 25	60 mm + 0,08 l_v ≥ 2 ϕ	60 mm + 0,02 l_v ≥ 2 ϕ	

[1] See Annex B 3, figure B3.1 and Annex B 4, figure B4.1
Note: The minimum concrete cover as specified in EN 1992-1-1:2011 must be observed.

Table B5.2: Dispensers and cartridge sizes corresponding to maximum embedment depth $l_{v,max}$ resp. $l_{e,ges,max}$

reinforcing bars (rebar)	fischer rebar anchor	Manual dispenser	Pneumatic or cordless dispenser (small)	Pneumatic or cordless dispenser (large)
		Cartridge size ≥390 ml (e.g. 390 ml, 500 ml, 585 ml, 1100 ml, 1500 ml)		
ϕ [mm]	[-]	$l_{v,max}$ / $l_{e,ges,max}$ [mm]		
8 to 10	---	2000		
12	FRA M12 FRA HCR M12			
14	---			
16	FRA M16 FRA HCR M16			
20	FRA M20 FRA HCR M20			
25	FRA M24 FRA HCR M24			
26 to 32	---			

Table B5.3: Conditions for use static mixer without an extension tube

Nominal drill hole diameter		d_0	[mm]	10	12	14	16	18	20	24	25	28	30	35	40
Drill hole depth h_0 by using	FIS MR Plus			≤90		≤120	≤140	≤150	≤160	≤190	≤210				
	FIS UMR			-	-	≤90	≤160	≤180	≤190	≤220		≤250			

Rebar connection with fischer injection system FIS EB II

Intended Use
Minimum concrete cover;
dispenser and cartridge sizes corresponding to maximum embedment depth

Annex B5

Table B6.1: Working times t_{work} and curing times t_{cure}

Temperature at anchoring base [°C] [2]	Maximum processing time [1] t_{work}	Minimum curing time t_{cure}
5 to 10	180 min	96 h
> 10 to 15	90 min	60 h
> 15 to 20	60 min	36 h
> 20 to 30	30 min	24 h
> 30 to 40	15 min	12 h

[1] Maximum time from the beginning of the injection to rebar / fischer rebar anchor setting and positioning
[2] If the temperature in the concrete falls below 10 °C the cartridge has to be warmed up to +20 °C.

Table B6.2: Installation tools for drilling and cleaning the bore hole and injection of the mortar

reinforcing bars (rebar)	fischer rebar anchor	Drilling and cleaning				Injection	
		Nominal drill bit diameter	Diameter of cutting edge	Steel brush diameter	Diameter of cleaning nozzle	extension tube 9 mm	extension tube 15 mm
						Injection adapter	Injection adapter
ϕ [mm]	[-]	d_0 [mm]	d_{cut} [mm]	d_b [mm]	[mm]	[colour]	[colour]
8[1]	---	10 [2]	≤ 10,50	11	---	---	---
		12	≤ 12,50	14	11	nature	---
10[1]	---	12	≤ 12,50	14			
		14	≤ 14,50	16		blue	---
12[1]	FRA M12[1] FRA HCR M12[1]	14	≤ 14,50	16	15		
		16	≤ 16,50	20		red	---
14	---	18	≤ 18,50	20		yellow	---
16	FRA M16 FRA HCR M16	20	≤ 20,55	25	19	green	green
20	FRA M20 FRA HCR M20	25	≤ 25,55	27		black	black
25	FRA M24[1] FRA HCR M24[1]	30	≤ 30,55	32	28	grey	grey
26	---	35	≤ 35,70	37	28	brown	brown
28	---	35	≤ 35,70	37	28	brown	brown
30	---	40	≤ 40,70	42	38	red	red
32	---	40	≤ 40,70	42	38	red	red

[1] Both drill bit diameters can be used
[2] Only hammer drilling with standard drill bit

Safety regulations



Review the Safety Data Sheet (SDS) before use for proper and safe handling!

Wear well-fitting protective goggles and protective gloves when working with mortar FIS EB II.

Important: Observe the instructions for use provided with each cartridge.

Installation instruction part 1

Hole drilling

Note: Before drilling, remove carbonated concrete; clean contact areas (see **Annex B2**)
In case of aborted drill holes the drill hole shall be filled with mortar.

Hammer drilling or compressed air drilling

1

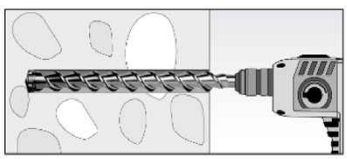

Drill the hole to the required embedment depth using a hammer drill with carbide drill bit set in rotation hammer mode or a pneumatic drill.
Drill bit sizes see **Table B6.2**.

2

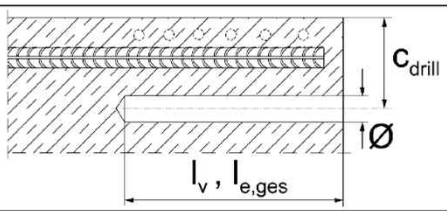

Measure and control concrete cover c
(c_{drill} = c + Ø / 2)
Drill parallel to surface edge and to existing rebar.
Where applicable use fischer drilling aid.

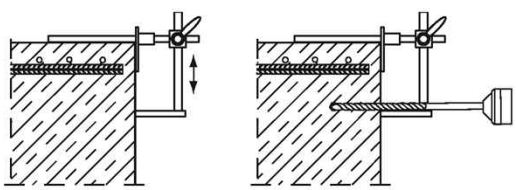

For holes l_v > 20 cm use drilling aid.
Three different options can be considered:

A) fischer drilling aid
B) Slat or spirit level
C) Visual check

Minimum concrete cover c_{min} see **Table B5.1**

Installation instruction part 2

Drill hole cleaning with oil-free compressed air

3a	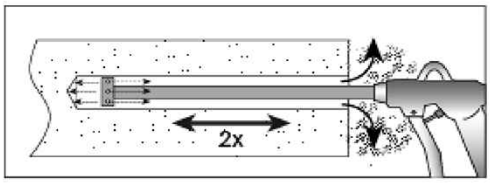	**Blowing** twice from the back of the hole with the appropriate nozzle (oil-free compressed air ≥ 6 bar) until return air stream is free of noticeable dust. Personal protective equipment must be used (see safety regulations **Annex B7**).
	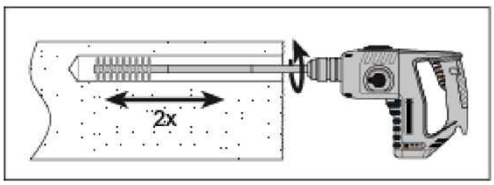	**Brushing (with power drill)** Check steel brush with brush control template. The brush must produce a noticeable resistance when it is inserted into the drill hole. Fix an adequate steel brush with an extension into a drilling machine and brush the bore hole twice.
	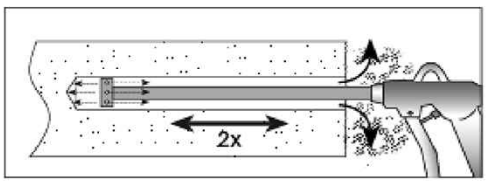	**Blowing** twice from the back of the hole with the appropriate nozzle (oil-free compressed air ≥ 6 bar) until return air stream is free of noticeable dust. Personal protective equipment must be used (see safety regulations **Annex B7**).

Go to step 4

Installation instruction part 3

Drill hole cleaning: manual cleaning is permitted for hammer drilled boreholes up to hole diameters $d_0 < 18$ mm and depths l_v resp. $l_{e,ges} \leq 12 \cdot \phi$

3b

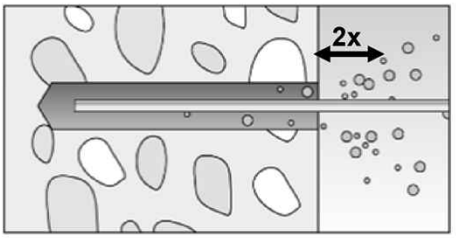

Blowing
blow out the hole twice by hand from the back of the hole. Use only the fischer blow out pump AB G.
Personal protective equipment must be used (see safety regulations **Annex B7**).

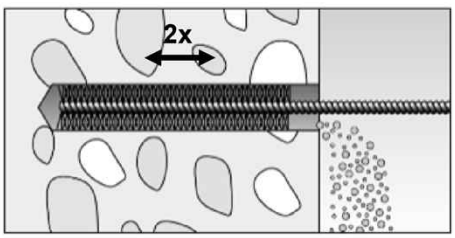

Brushing
Twice with the specified brush size by inserting the round steel brush to the back of the hole and twisting motion. The brush must produce a noticeable resistance when it is inserted into the drill hole. Corresponding brushes see **Table B6.2**.

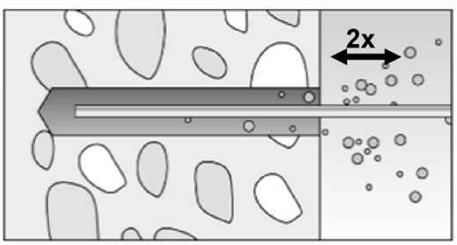

Blowing
blow out the hole twice by hand from the back of the hole. Use only the fischer blow out pump AB G.
Personal protective equipment must be used (see safety regulations **Annex B7**).

Go to step 4

Installation instruction part 4

reinforcing bars (rebar) / fischer rebar anchor and cartridge preparation

4	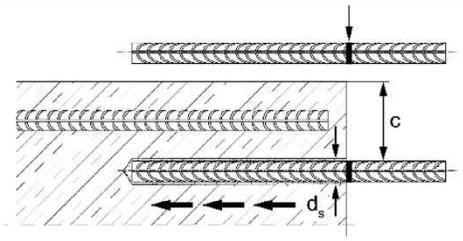	Before use, make asure that the rebar or the fischer rebar anchor is dry and free of oil or other residue. Mark the embedment depth l_v resp. $l_{e,ges}$ (e.g. with tape) Insert rebar in borehole, to verify drill hole depth and setting depth l_v resp. $l_{e,ges}$
5	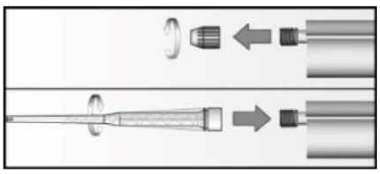	Twist off the sealing cap Twist on the static mixer (the spiral in the static mixer must be clearly visible).
6	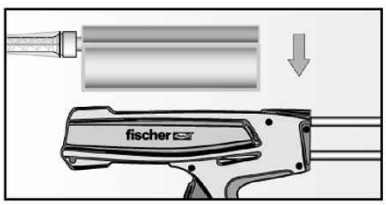	Place the cartridge into a suitable dispenser. When using the foilbag, the foil container holder must be used.
7	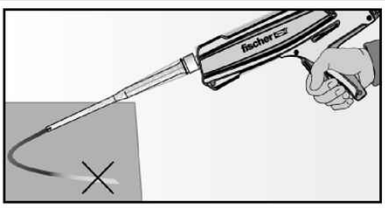	Press out approximately 10 cm of mortar until the resin is permanently grey in colour. Mortar which is not grey in colour will not cure and must be disposed.

Go to step 8

Installation instruction part 5; Installation with FIS EB II

Injection of the mortar without extension tube

8a

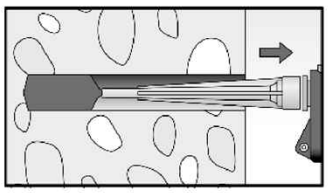

Inject the mortar from the back of the hole towards the front and slowly withdraw the static mixer step by step with each trigger pull.
Avoid bubbles.
Fill holes approximately 2/3 full, to ensure that the annular gap between the rebar and the concrete will be completely filled with adhesive over the entire embedment length.
The conditions for mortar injection without extension tube can be found in **Table B5.3**

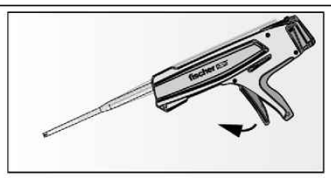

After injecting, release the dispenser. This will prevent further mortar discharge from the static mixer.

Injection of the mortar with extension tube

8b

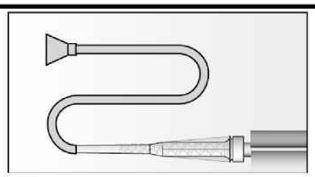

Assemble mixing nozzle FIS MR Plus or FIS UMR, extension tube and appropriate injection adapter (see **Table B6.2**)

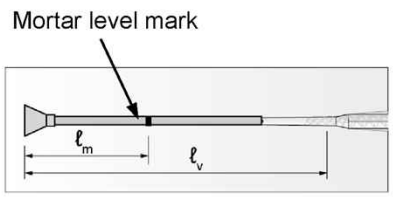

Mark the required mortar level l_m and embedment depth l_v resp. $l_{e,ges}$ with tape or marker on the injection extension tube.
a) Estimation:

$$l_m = \frac{1}{3} \cdot l_v \; resp. \; l_m = \frac{1}{3} \cdot l_{e,ges} \text{ [mm]}$$

b) Precise equation for optimum mortar volume:

$$l_m = l_v \; resp. \; l_{e,ges} \left((1{,}2 \cdot \frac{d_s^2}{d_0^2} - 0{,}2) \right) \text{ [mm]}$$

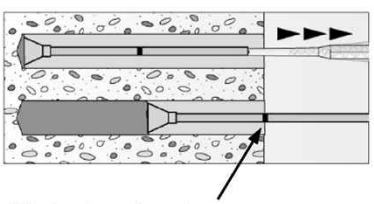

Insert injection adapter to back of the hole. Begin injection allowing the pressure of the injected adhesive mortar to push the injection adapter towards the front of the hole. Do not actively pull out!
Fill holes approximately 2/3 full, to ensure that the annular gap between the rebar and the concrete will be completely filled with adhesive over the embedment length.
When using an injection adapter continue injection until the mortar level mark l_m becomes visible.
Maximum embedment depth, see **Table B5.2**

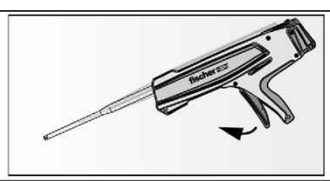

After injecting, release the dispenser. This will prevent further mortar discharge from the static mixer.

Go to step 9

Installation instruction part 6; Inatallation with FIS EB II

Insert rebar / fischer rebar anchor

9	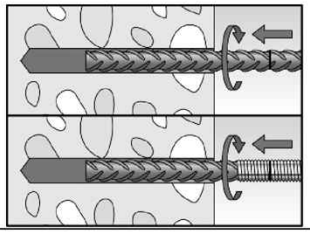	Insert the rebar / fischer rebar anchor FRA / FRA HCR slowly twisted into the borehole until the embedment mark is reached. Recommendation: Rotation back and forth of the reinforcement bar or the fischer rebar anchor FRA makes pushing easy.
10	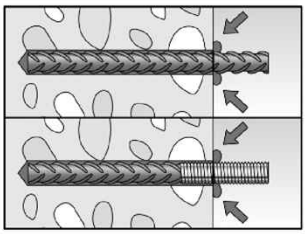	After installing the rebar or fischer rebar anchor FRA / FRA HCR the annular gap must be completely filled with mortar. Proper installation • Desired embedment depth is reached l_v resp. $l_{e,ges}$: embedment mark at concrete surface • Excess mortar flows out of the borehole after the rebar or fischer rebar anchor have been fully inserted up to the embedment mark.
11	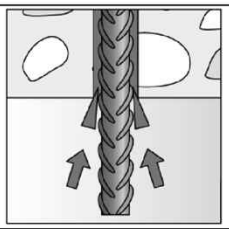	For overhead installation, support the rebar / fischer rebar anchor FRA / FRA HCR and secure it from falling till mortar started to harden, e.g. using wedges.
12		Observe the working time "t_{work}" (see **table B6.1**), which varies according to temperature of base material. Minor adjustments to the rebar / fischer rebar anchor position may be performed during the working time. Full load may be applied only after the curing time "t_{cure}" has elapsed (see **Table B6.1**)
13	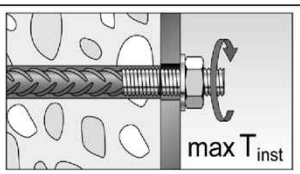	Mounting the fixture, max T_{inst} see **Table A6.1**

Minimum anchorage length and minimum lap length

The minimum anchorage length $l_{b,min}$ and the minimum lap length $l_{o,min}$ according to EN 1992-1-1:2011 shall be multiplied by the relevant amplification factor α_{lb} according to **Table C1.1**.

Table C1.1: Amplification factor α_{lb} related to concrete strength class and drilling method

Hammer drilling and compressed air drilling									
Rebar / fischer rebar anchor	**Amplification factor α_{lb}**								
	Concrete strength class								
ϕ [mm]	C12/15	C16/20	C20/25	C25/30	C30/37	C35/45	C40/50	C45/55	C50/60
8 to 32	1,0								

Table C1.2: Bond efficiency factor k_b for hammer drilling and compressed air drilling

Hammer drilling and compressed air drilling									
Rebar / fischer rebar anchor	**Bond efficiency factor k_b**								
	Concrete strength class								
ϕ [mm]	C12/15	C16/20	C20/25	C25/30	C30/37	C35/45	C40/50	C45/55	C50/60
8 to 32	1,0								

Table C1.3: Characteristic **tensile yield strength** for rebar part of **fischer rebar anchors**

fischer rebar anchor FRA / FRA HCR			**M12**	**M16**	**M20**	**M24**
Characteristic tensile yield strength for rebar part						
Rebar diameter	ϕ	[mm]	12	16	20	25
Characteristic tensile yield strength	f_{yk}	[N/mm²]	500	500	500	500
Partial factor for rebar part	$\gamma_{Ms,N}$ [1)]	[-]	1,15			

1) In absence of national regulations

Table C1.4: Characteristic resistance to **steel failure** under tension loading of **fischer rebar anchors**

fischer rebar anchor FRA / FRA HCR			**M12**	**M16**	**M20**	**M24**
Characteristic resistance to steel failure under tension loading						
Characteristic resistance	$N_{Rk,s}$	[kN]	62,0	111,0	173,0	236,5
Partial factor						
Partial factor	$\gamma_{Ms,N}$ [1)]	[-]	1,4			

1) In absence of national regulations

Table C2.1: Design values of the bond strength $f_{bd,PIR}$ in N/mm² for hammer drilling, compressed air drilling

$$f_{bd,PIR} = k_b \cdot f_{bd}$$

f_{bd}: Design value of the bond strength in N/mm² considering the concrete strength classes and the rebar diameter for good bond condition (for all other bond conditions multiply the values by $\eta_1 = 0,7$) and recommended partial factor $\gamma_c = 1,5$ according to EN 1992-1-1:2011

k_b: Bond efficiency factor according to **Table C1.2**

Hammer drilling and compressed air drilling

Rebar / fischer rebar anchor ϕ [mm]	bond strength $f_{bd,PIR}$ [N/mm²] Concrete strength class								
	C12/15	C16/20	C20/25	C25/30	C30/37	C35/45	C40/50	C45/55	C50/60
8 to 32	1,7	2,0	2,3	2,7	3,0	3,4	3,7	4,0	4,3

Table C2.2: Characteristics resistance to **steel failure** for **fischer rebar anchors** under tension loading and fire exposure R30 to R120

For concrete strength classes C12/C15 to C50/60 acc. to EN 1992-4:2018

fischer rebar anchor FRA / FRA HCR				**M12**	**M16**	**M20**	**M24**
Characteristic resistance to steel failure under tension loading and fire exposure	R30	$N_{Rk,s,fi}$	[kN]	2,5	4,7	7,4	10,6
	R60			2,1	3,9	6,1	8,8
	R90			1,7	3,1	4,9	7,1
	R120			1,3	2,5	3,9	5,6

The bond strength $f_{bd,fi}$ at increased temperature for concrete strength classes C12/15 to C50/60 (all drilling methods)

The bond strength $f_{bd,fi}$ at increased temperature has to be calculated by the following equation:

$$f_{bd,fi} = k_{fi}(\theta) \cdot f_{bd,PIR} \cdot \frac{\gamma_c}{\gamma_{m,fi}}$$

If: $\theta > 49$ °C $\quad k_{fi}(\theta) = \frac{39924 \cdot \theta^{-2,134}}{f_{bd,PIR} \cdot 4,3} \leq 1.0$

If: $\theta > \theta_{max}$ (200 °C) $\quad k_{fi}(\theta) = 0$

$f_{bd,fi}$	=	The bond strength at increased temperature in N/mm²
(θ)	=	Temperature in °C in the mortar layer
$k_{fi}(\theta)$	=	Reduction factor at increased temperature
$f_{bd,PIR}$	=	Design value of the bond strength in N/mm² in cold condition according to **Table C2.1** considering the concrete classes, the rebar diameter, the drilling method and the bond conditions according to EN 1992-1-1:2011
γ_C	=	1,5 recommended partial factor according to EN 1992-1-1:2011
$\gamma_{m,fi}$	=	1,0 recommended partial factor

For evidence at increased temperature the anchorage length shall be calculated according to EN 1992-1-1:2011 Equation 8.3 using the temperature-dependent ultimate bond strength $f_{bd,fi}$.

Figure C3.1: Example of the graph of reduction factor $k_{fi}(\theta)$ for concrete strength class C20/25 for good bond conditions

