LEISTUNGSERKLÄRUNG

DoP: 0136

für termoz SV II ecotwist (Kunststoffdübel für die Verwendung in Beton und Mauerwerk) – **DE**

1. Eindeutiger Kenncode des Produkttyps: **DoP: 0136**

2. Verwendungszweck(e): **Für die Verwendung in Wärmedämmverbundsystemen (WDVS) mit Putzschicht zur Weiterleitung von Windsoglasten, siehe Anhang, insbesondere Anhänge B 1 bis B 3**

3. Hersteller: **fischerwerke GmbH & Co. KG, Klaus-Fischer-Straße 1, 72178 Waldachtal, Deutschland**

4. Bevollmächtigter: **--**

5. System(e) zur Bewertung und Überprüfung der Leistungsbeständigkeit: **2+**

6. Europäisches Bewertungsdokument: **EAD 330196-01-0604**

   Europäische Technische Bewertung: **ETA-12/0208; 2017-12-05**

   Technische Bewertungsstelle: **DIBt**

   Notifizierte Stelle(n): **1343 – MPA Darmstadt**

7. Erklärte Leistung(en):

Mechanische Festigkeit und Standsicherheit (BWR 1), Sicherheit und Barrierefreiheit bei der Nutzung (BWR 4)

- **Charakteristischer Widerstand: Siehe Anhang, insbesondere Anhang C 1**
- **Rand- und Achsabstände: Siehe Anhang, insbesondere Anhang B 2**
- **Verschiebungen: Siehe Anhang, insbesondere Anhang C 2**

Energieeinsparung und Wärmeschutz (BWR 6)

- **Punktbezogener Wärmedurchgangskoeffizient: Siehe Anhang, insbesondere Anhang C 2**

8. Angemessene Technische Dokumentation und/oder Spezifische Technische Dokumentation: ---

Die Leistung des vorstehenden Produkts entspricht der erklärten Leistung/den erklärten Leistungen. Für die Erstellung der Leistungserklärung im Einklang mit der Verordnung (EU) Nr. 305/2011 ist allein der obengenannte Hersteller verantwortlich.

Unterzeichnet für den Hersteller und im Namen des Herstellers von:

Andreas Bucher, Dipl.-Ing.

i.V. A. Bucher

Wolfgang Hengesbach, Dipl.-Ing., Dipl.-Wirtsch.-Ing.

i.V. W. Hengesbach

Tumlingen, 2017-12-12

- Diese Leistungserklärung wurde in verschiedenen Sprachversionen erstellt. Für den Fall unterschiedlicher Auslegung hat immer die englische Version Vorrang.
- Der Anhang enthält freiwillige und ergänzende Informationen in englischer Sprache. Diese gehen über die (sprachneutral angegebenen) gesetzlichen Anforderungen hinaus.

Specific Part

1 Technical description of the product

The fischer termoz SV II ecotwist screwed-in anchor consist of an anchor sleeve and a screw plate in different colours, both made of polyamide (virgin material) and an accompanying specific screw of galvanised steel.

The product description is given in Annex A.

2 Specification of the intended use in accordance with the applicable European Assessment Document

The performances given in Section 3 are only valid if the anchor is used in compliance with the specifications and conditions given in Annex B.

The verification and assessment methods on which this European Technical Assessment is based lead to the assumption of a working life of the anchor of at least 25 years. The indications given on the working life cannot be interpreted as a guarantee given by the producer, but are to be regarded only as a means for choosing the right products in relation to the expected economically reasonable working life of the works.

3 Performance of the product and references to the methods used for its assessment

3.1 Mechanical resistance and stability (BWR 1)

Essential characteristic	Performance
Characteristic tension resistance	See Annex C1
Edge distances and spacing	See Annex B2
Displacements	See Annex C2

3.2 Energy economy and heat retention (BWR 6)

Essential characteristic	Performance
Point thermal transmittance	See Annex C2

4 Assessment and verification of constancy of performance (AVCP) system applied, with reference to its legal base

In accordance with EAD No. 330335-00-0604, the applicable European legal act is: [97/463/EC].

The system to be applied is: 2+

Installed anchor : termoz SV II ecotwist

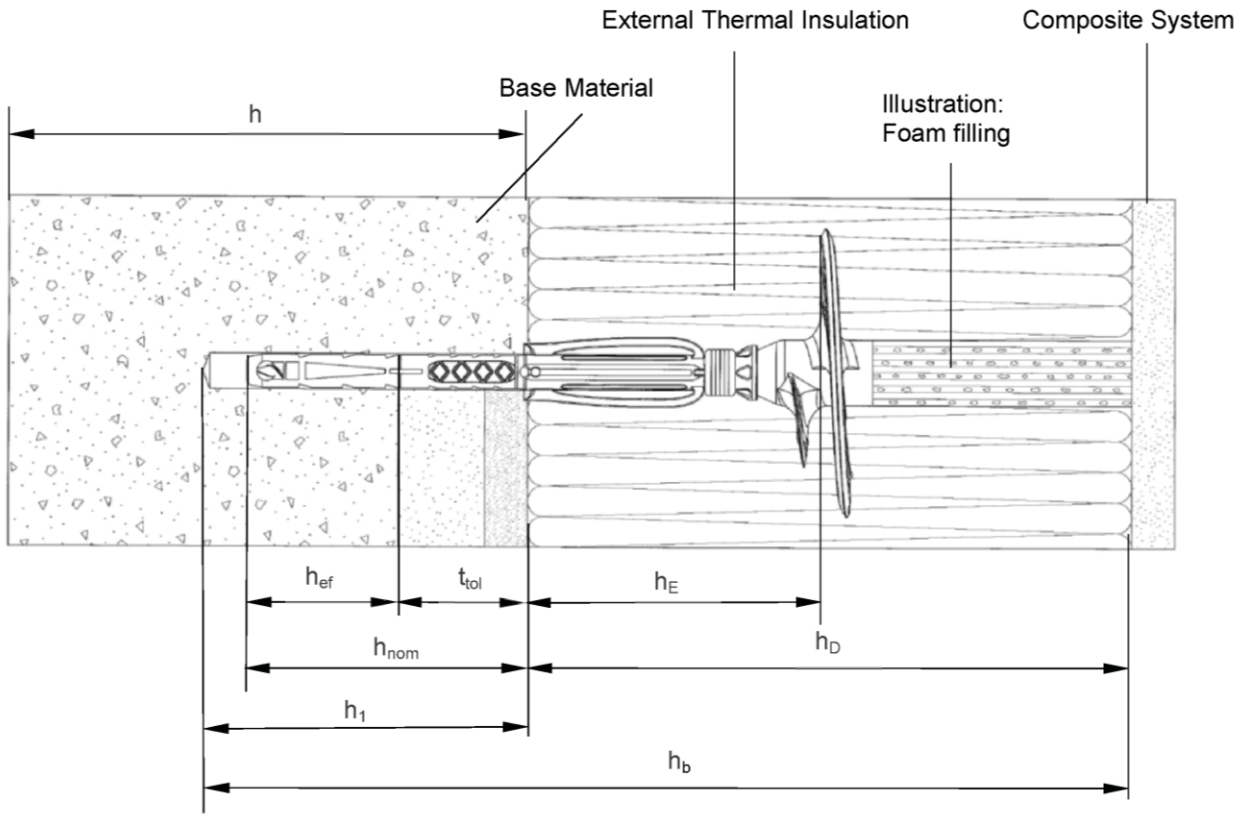

Legend

h_{nom} = Overall plastic anchor embedment depth in the base material with non-load bearing coating (t_{tol})

h_1 = Depth of drilled hole to deepest point in the base material

h = Thickness of base material (wall)

h_D = Thickness of insulation material

t_{tol} = Thickness of equalizing layer and / or non–load bearing coating

h_E = Embedment depth

h_b = Total bore hole depth

h_{ef} = Effective anchor embedment depth in the base material

Figures not to scale.

fischer termoz SV II ecotwist	**Annex A1**
Product description Installed anchor	

Parts: termoz SV II ecotwist

Anchor sleeve

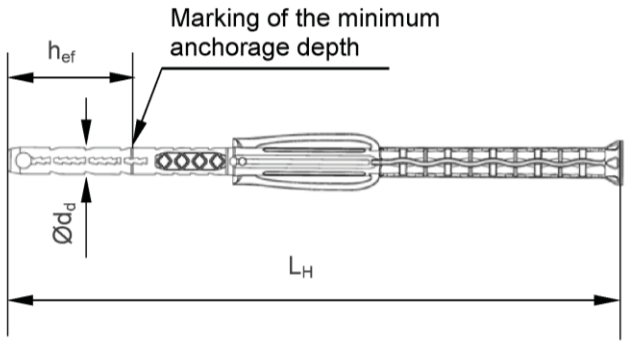

Screw plate

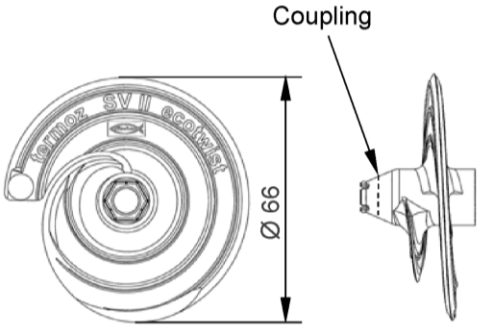

Special screw

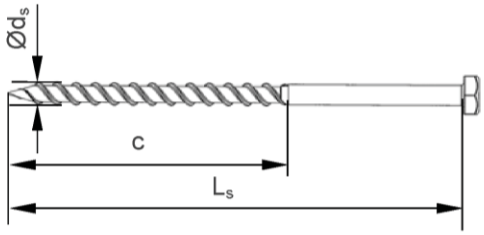

Adjustment of the ring depends of the insulation material thickness, e.g. h_D = 180 mm
→adjust value 180 at the setting tool

Setting tool

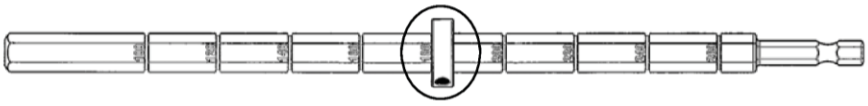

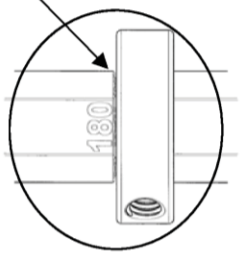

Anchor complete

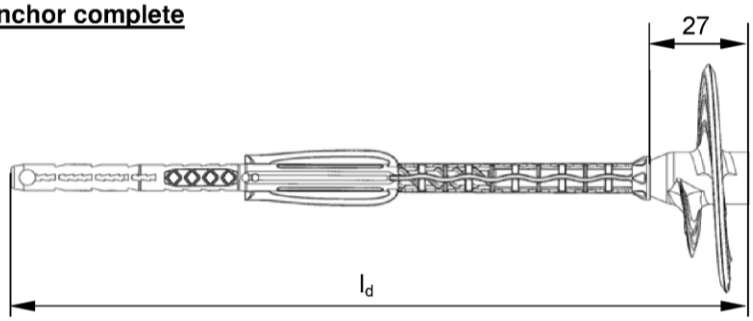

Figures not to scale.

fischer termoz SV II ecotwist	**Annex A2**
Product description Anchor type and parts	

Table A3.1: Dimensions

Anchor type	Anchor sleeve					Special screw		
termoz SV II ecotwist	Ø d_d	h_{ef} [1)]	h_E [1)]	l_d	L_H	Ø d_s	L_s	c
	[mm]							
t_{tol} 0-10 mm	8	35	70	162	135	6	100	74
t_{tol} 0-30 mm				202	175		120	
t_{tol} 30-60 mm				232	205		150	

[1)] see Annex A1

Table A3.2: Marking on the plate

	Marking
Anchor type	termoz SV II ecotwist
Works symbol	or
Example	fischer (optional) termoz SV II ecotwist or CE (optional); Ø 8 (optional); ABCDE (optional) XXXXX= various additional markings allowed

Table A3.3: Marking on the anchor sleeve

	Marking
termoz SV II ecotwist t_{tol} 0-10 mm	t_{tol} 0-10
termoz SV II ecotwist t_{tol} 0-30 mm	t_{tol} 0-30
termoz SV II ecotwist t_{tol} 30-60 mm	t_{tol} 30-60

Table A3.4: Material

Designation	Material
Anchor sleeve	PA6 (virgin material), colour: grey
Screw plate	PA6 (virgin material) GF, colour: grey, yellow, red, orange, green, blue
Special screw	Steel; gal Zn A2G or A2F according to EN ISO 4042:1999

fischer termoz SV II ecotwist	**Annex A3**
Product description Anchor types, marking on the anchor plate/sleeve, dimensions and material	

Specifications of intended use

Anchorages subject to:

- The anchor may only be used for transmission of wind suction loads and shall not be used for the transmission of dead loads of the external thermal insulation composite system (ETICS).

Base materials:

- Normal weight concrete (use category A), according to Annex C1
- Solid masonry (use category B), according to Annex C1
- Hollow or perforated masonry (use category C), according to Annex C1
- Lightweight aggregate concrete (use category D), according to Annex C1
- Autoclaved aerated concrete (use category E), according to Annex C1
- For other base materials of the use categories A, B, C, D and E the characteristic resistance of the anchor may be determined by job site tests acc. to EOTA Technical Report TR 051 Edition December 2016.

Temperature Range:

- 0°C to +40°C (max. short term temperature +40°C and max. long term temperature +24°C)

Design:

- The anchorages are designed under the responsibility of an engineer experienced in anchorages and masonry work with the partial safety factors γ_M = 2,0 and γ_F = 1,5 in absence of other national regulations.
- Verifiable calculation notes and drawings are prepared taking account of the loads to be anchored. The position of the anchors is indicated on the design drawings.
- Fasteners are only to be used for multiple fixings of ETICS.

Installation:

- Drill method according to Annex C1
- Anchor installation carried out by appropriately qualified personnel and under the supervision of the person responsible for technical matters on the site
- Installation temperature from 0°C to +40°C
- Exposure to UV due to solar radiation of the anchor not protected by rendering ≤ 6 weeks

Table B2.1: Installation parameters

					termoz SV II ecotwist
Drill hole diameter	d_0	=			8
Cutting diameter of drill bit	d_{cut}	≤			8,45
Depth of drill hole to deepest point	h_1	≥			55/75/105
Total bore hole depth **at SV II ecotwist** t_{tol} 0-10 mm	h_b	≥			h_D + 55
Total bore hole depth **at SV II ecotwist** t_{tol} 0-30 mm					h_D + 75
Total bore hole depth **at SV II ecotwist** t_{tol} 30-60 mm				[mm]	h_D + 105
Overall plastic anchor embedment depth in the base material (see Annex A1) **at SV II ecotwist** t_{tol} 0-10 mm	h_{nom}	=			45
Overall plastic anchor embedment depth in the base material (see Annex A1) **at SV II ecotwist** t_{tol} 0-30 mm					65
Overall plastic anchor embedment depth in the base material (see Annex A1) **at SV II ecotwist** t_{tol} 30-60 mm					95

Table B2.2: Minimum distances and dimensions

				termoz SV II ecotwist
Minimum thickness of member	h_{min}			100[1)]
Minimum allowable spacing	s_{min}	=	[mm]	100
Minimum allowable edge distance	c_{min}			100

[1)] For weather resistant external wall panels: h_{min}=40 mm

Scheme of distances and spacing

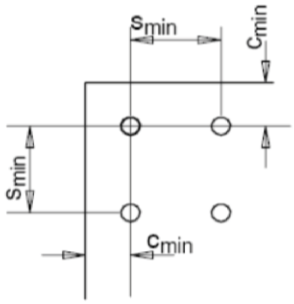

fischer termoz SV II ecotwist	**Annex B2**
Intended use Installation parameters Minimum thickness of member, distances and spacing	

Installation instructions

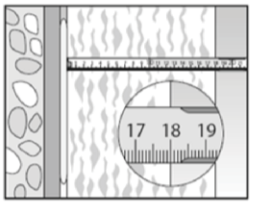

1. Measure insulation thickness h_D
(example: 18 cm = 180 mm).

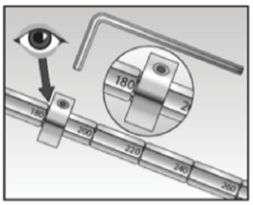

2. Adjust the setting tool ring corresponding to the insulation material thickness h_D in mm.
Number is legible.
Additionally to the setting tool ring a thin plastic plate (maximum 1 mm thickness) can be used as a stop unit for easier mounting.

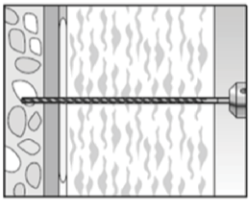

3. Drill bore hole.
Total drill hole depth must be at
t_{tol} 0-10 mm→ h_D + 55 mm
t_{tol} 0-30 mm→ h_D + 75 mm
t_{tol} 30-60 mm→ h_D + 105 mm.
Note: Hlz, AAC only with rotary drilling

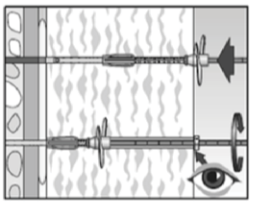

4. Press the anchor with the screw plate tight against the surface of the insulation material, then start screwing-in the anchor. Setting is finished when the surface of the ring is flush with the surface of the insulation material.

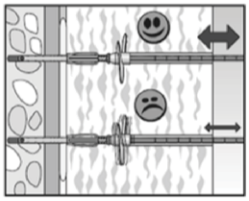

5. When step 4 is completed, press the adjustment tool tight against the installed anchor.
If there is no axial movement of the anchor, remove the setting tool.
In case of axial movement, a new anchor has to be set in a new drill hole.

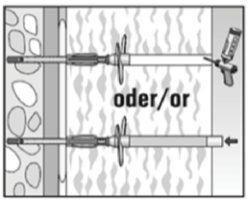

5. The hole in the insulation material must be filled with a suitable foam (illustrated in Annex A1) or must be closed with an appropriate insulation cylinder.

fischer termoz SV II ecotwist	**Annex B3**
Intended use Installation instructions	

Table C1.1: Characteristic resistance N_{Rk}

Base material	Use cat. 1)	Bulk density ρ [kg/dm³]	Minimum compressive strength f_b [N/mm²]	Remarks	Drill method 2)	Characteristic resistance N_{Rk} [kN]
Weather resistant skin of external wall panels, concrete C20/25 – C50/60	-	-	-	Thickness of concrete panels 40 mm ≤ h < 100 mm	H	**0,9**
Weather resistant skin of external wall panels, concrete C20/25 –C50/60	-	-	-	Thickness of concrete panels 40 mm ≤ h < 100 mm	R	**1,5**
Concrete C12/15- C 50/60 acc. to EN 206-1:2000	A	-	-	-	H	**1,5**
Sand-lime solid bricks, **KS** acc. to EN 771-2:2011	B	≥ 2,0	20	Cross section reduced up to 15% by perforation vertically to the resting area	H	**1,5**
			12			**1,2**
Clay bricks, **Mz** acc. to EN 771-1:2011	B	≥ 1,8	12	Cross section reduced up to 15% by perforation vertically to the resting area	H	**1,2**
Solid concrete block, **Vbn** acc. to EN 771-3:2011	B	≥ 2,0	20	Cross section reduced up to 10% by perforation vertically to the resting area	H	**1,5**
			12			**1,2**
Lightweight concrete solid blocks, **Vbl** acc. to EN 771-3:2011	B	≥ 1,4	8	Cross section reduced up to 15% by perforation vertically to the resting area, exterior web thickness ≥ 35 mm	H	**0,6**
Vertically perforated sand-lime bricks, **KSL** acc. to EN 771-2:2011	C	≥ 1,4	20	Cross section reduced more than 15% by perforation vertically to the resting area, Exterior web thickness ≥ 23 mm	H	**1,2**
			12			**0,75**
Vertically perforated clay bricks, **Hlz** acc. to EN 771-1:2011	C	≥ 1,0	12	Cross section reduced more than 15% and less than 50% by perforation vertically to the resting area, Exterior web thickness ≥ 12 mm	R	**0,75**
Lightweight concrete hollow blocks, **Hbl** acc. to EN 771-3:2011	C	≥ 1,2	10	Cross section reduced between 15% and 50% by perforation vertically to the resting area. Exterior web thickness ≥ 38 mm	H	**1,2**
			8			**0,9**
			6			**0,75**
			4			**0,6**
Lightweight concrete hollow blocks, **Hbl4** acc. to EN 771-3:2011	C	≥ 0,9	4	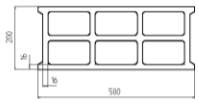	H	**0,5**
Lightweight aggregate concrete, **LAC** acc. to EN 1520:2011 / EN 771-3:2011	D	≥ 0,9	6	-	H	**0,75**
Autoclaved aerated concrete blocks **AAC** acc. to EN 771-4:2011	E	≥ 0,5	4	-	R	**0,4**

1) See Annex B1
2) R = Rotary drilling | H = Hammer drilling

Figures not to scale.

fischer termoz SV II ecotwist

Performance
Characteristic resistance

Annex C1

Table C2.1: Point thermal transmittance acc. to EOTA Technical TR 025 : 2016 – 05

Anchor type	Thickness of insulation material h_D [mm]	Point thermal transmittance χ [W/K]
fischer termoz SV II ecotwist EPS-plug and air void t_{tol} = 0 - 10 mm	100 - 240	0,001
	> 240	0
fischer termoz SV II ecotwist PU-foam filled hole t_{tol} = 0 - 10 mm	100 - 150	0,001
	> 150	0
fischer termoz SV II ecotwist EPS-plug and air void t_{tol} = 0 - 30 mm	100 - 240	0,001
	> 240	0
fischer termoz SV II ecotwist PU-foam filled hole t_{tol} = 0 - 30 mm	100 - 150	0,001
	> 150	0
fischer termoz SV II ecotwist EPS-plug and air void t_{tol} = 30 - 60 mm	100	0,002
	120 - 240	0,001
	> 240	0
fischer termoz SV II ecotwist PU-foam filled hole t_{tol} = 30 - 60 mm	100	0,002
	120 - 150	0,001
	> 150	0

Table C2.2: Displacements

Base material	Minimum compressive strength f_b [N/mm²]	Tension load N [kN]	Displacements δm(N) [mm]
Concrete thin members 100 mm > h ≥ 40 mm ≥ C20/25 acc. to EN 206-1 (hammer drilling)	-	0,3	< 0,3
Concrete thin members 100 mm > h ≥ 40 mm ≥ C20/25 acc. to EN 206-1 (rotary drilling)	-	0,5	< 0,3
Concrete C16/20 - C50/60 acc. to EN 206-1 : 2000	-	0,5	< 0,3
Sand-lime solid bricks, **KS** acc.to EN 771-2 : 2011	20	0,5	< 0,3
	12	0,4	
Clay bricks, **Mz** acc. to EN 771-1:2011	12	0,4	< 0,3
Solid concrete block, **Vbn** acc. to EN 771-3:2011	20	0,5	< 0,3
	12	0,4	
Lightweight concrete solid blocks, **Vbl** acc. to EN 771-3:2011	8	0,2	< 0,2
Vertically perforated sand-lime bricks, **KSL** acc. to EN 771-2:2011	20	0,4	< 0,2
	12	0,25	
Vertically perforated clay bricks, **Hlz** acc. to EN 771-1:2011	12	0,25	< 0,3
Lightweight concrete hollow blocks, **Hbl** acc. to EN 771-3:2011	10	0,4	< 0,3
	8	0,3	
	6	0,25	
	4	0,2	
Lightweight concrete hollow blocks, **Hbl4** acc. to EN 771-3:2011	4	0,15	< 0,4
Lightweight aggregate concrete, **LAC** acc. to EN 1520 :2011 / EN 771-3:2011	6	0,25	< 0,2
Autoclaved aerated concrete blocks, **AAC** acc. to EN 771-4:2011	4	0,15	< 0,1

fischer termoz SV II ecotwist	**Annex C2**
Performance Point thermal transmittance, displacements	