YDEEVNEDEKLARATION

Nr. 0055 – DA

1. Varetypens unikke identifikationskode: **fischer Termoz CN 8**

2. Tilsigtet anvendelse:

Produkt	**Anvendelsesområde/r**
Nylondübel til anvendelse i beton og murværk	Til anvendelse i udvendig isolering med pudslag for optagelse af vindsuglaster, Se appendiks, specifikt appendiks B 1 - B 3

3. Fabrikant: **fischerwerke GmbH & Co. KG, Klaus-Fischer-Straße 1, 72178 Waldachtal, Tyskland**

4. Bemyndiget repræsentant: **--**

5. System eller systemer til vurdering og kontrol af konstansen af ydeevnen: **2+**

6a. Harmoniseret standard: ---

Notificeret organ/notificerede organer: ---

6b. Europæisk vurderingsdokument: **ETAG 014; 2011-02**

Europæisk teknisk vurdering: **ETA-09/0394; 2016-03-18**

Teknisk vurderingsorgan: **DIBt**

Notificeret organ/notificerede organer: **1343 – MPA Darmstadt**

7. Deklareret ydeevne/deklarerede ydeevner:

Sikkerhed ved anvendelse (BWR 4)

Vigtigste funktion	**Ydeevne**
karakteristisk træklast	Se appendix, specielt appendiks C 1
Kant- og indbyrdes afstande	Se appendix, specielt appendiks B 2
Punktmæssig varmoverførsels-koefficient	Se appendix, specielt appendiks C 2
Pladestivhed	Se appendix, specielt appendiks C 2
Forskydninger	Se appendix, specielt appendiks C 2

8. Relevant teknisk dokumentation og/eller specifik teknisk dokumentation: ---

Ydeevnen for den vare, der er anført ovenfor, er i overensstemmelse med den deklarerede ydeevne. Denne ydeevnedeklaration er udarbejdet i overensstemmelse med forordning (EU) nr. 305/2011 på eneansvar af den fabrikant, der er anført ovenfor.

Underskrevet for fabrikanten og på dennes vegne af:

Andreas Bucher, Dipl.-Ing.

i.V. A. Bucher

Wolfgang Hengesbach, Dipl.-Ing., Dipl.-Wirtsch.-Ing.

i.V. W. Hengesbach

Tumlingen, 2016-03-29

- Denne DoP er tilgængelig i forskellige sprogversioner. I tilfælde af forskellige fortolkninger gælder den engelske version..
- Appendixet indeholder frivillige og udvidede informationer på engelsk. De overgår de lokale (sprogneutrale) retslige krav.

Specific Part

1 Technical description of the product

The fischer nailed-in anchor termoz CN 8 consists of an anchor sleeve with an enlarged shaft made of polypropylene, an insulation plate made of glass fibre reinforced polyamide (termoz CN 8 / 250-390) and a special compound nail consisting of two parts, one made of glass fibre reinforced polyamide for the shaft element and the other part made of galvanised steel.

The anchor may in addition be combined with the anchor plates DT 90, DT 110 and DT 140.

The product description is given in Annex A.

2 Specification of the intended use in accordance with the applicable European Assessment Document

The performances given in Section 3 are only valid if the anchor is used in compliance with the specifications and conditions given in Annex B.

The verification and assessment methods on which this European Technical Assessment is based lead to the assumption of a working life of the anchor of at least 25 years. The indications given on the working life cannot be interpreted as a guarantee given by the producer, but are to be regarded only as a means for choosing the right products in relation to the expected economically reasonable working life of the works.

3 Performance of the product and references to the methods used for its assessment

3.1 Mechanical resistance and stability (BWR 1)

The essential characteristics regarding mechanical resistance and stability are included under the Basic Works Requirement Safety in use.

3.2 Hygiene, health and the environment (BWR 3)

Regarding dangerous substances there may be requirements (e.g. transposed European legislation and national laws, regulations and administrative provisions) applicable to the products falling within the scope of this European Technical Assessment. In order to meet the provisions of Regulation (EU) No 305/2011, these requirements need also to be complied with, when and where they apply.

3.3 Safety in use (BWR 4)

Essential characteristic	Performance
Characteristic tension resistance	See Annex C 1
Edge distances and spacing	See Annex B 2
Point thermal transmittance	See Annex C 2
Plate stiffness	See Annex C 2
Displacements	See Annex C 2

4 Assessment and verification of constancy of performance (AVCP) system applied, with reference to its legal base

In accordance with guideline for European technical approval ETAG 014, February 2011 used as European Assessment Document (EAD) according to Article 66 Paragraph 3 of Regulation (EU) No 305/2011 the applicable European legal act is: 97/463/EC.

The system to be applied is: 2+

termoz CN 8

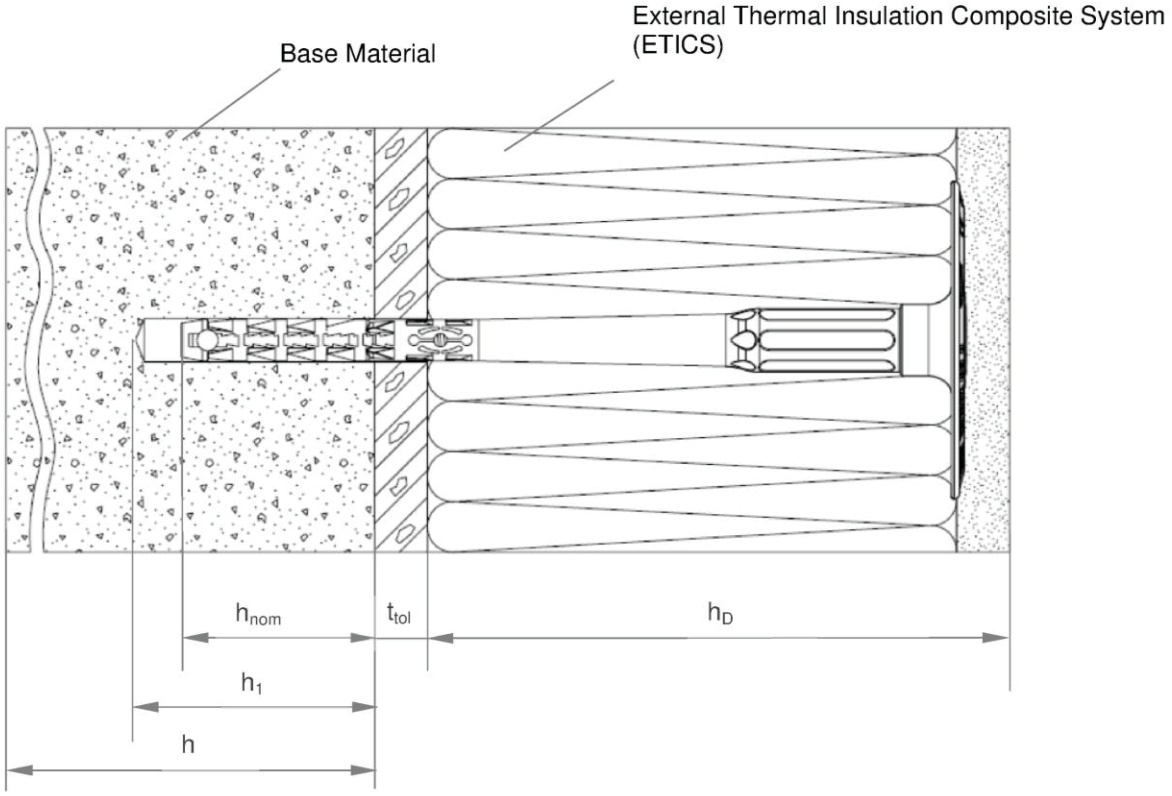

Legend

h_{nom} = Overall plastic anchor embedment depth in the base material

h_1 = Depth of drilled hole to deepest point

h = Thickness of member (wall)

h_D = Thickness of insulation material

t_{tol} = Thickness of equalizing layer or non–load bearing coating

fischer termoz CN 8 | fischer termoz CN 8 R	**Annex A1**
Product description Installed anchor	

termoz CN 8 / 110-230

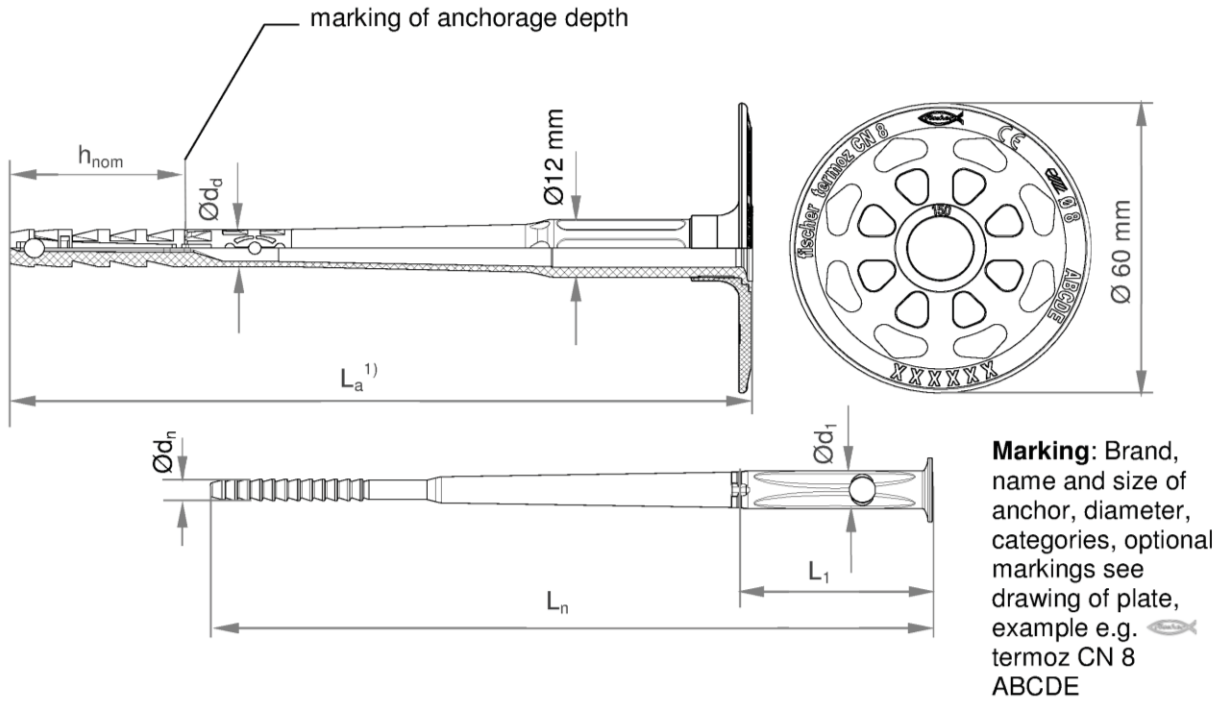

Marking: Brand, name and size of anchor, diameter, categories, optional markings see drawing of plate, example e.g. termoz CN 8 ABCDE

1) Various length of the anchors are possible

e.g. for termoz CN 8 / 110-230: 110 mm ≥ L_a ≤ 230 mm
$L_a = L_n + 4$ mm

Determination of maximum thickness of insulation: $h_D = L_a - h_{nom} - t_{tol}$

e.g. for termoz CN 8x150: L_a = 148 mm, h_{nom} = 35 mm, t_{tol} = 10 mm

h_D = 148 - 35 - 10 ≈ 100

Table A2.1: Dimensions termoz CN 8 / 110-230

Anchor type	Anchor sleeve		Accompanying specific plastic nail		
	Ø d_d [mm]	**h_{nom}** [mm]	**Ø d_n** [mm]	**L_1** [mm]	**Ø d_1** [mm]
termoz CN 8 / 110-230	8	35/55 2)	4,5	40	8

2) Only for use cat. E

termoz CN 8 / 250-390

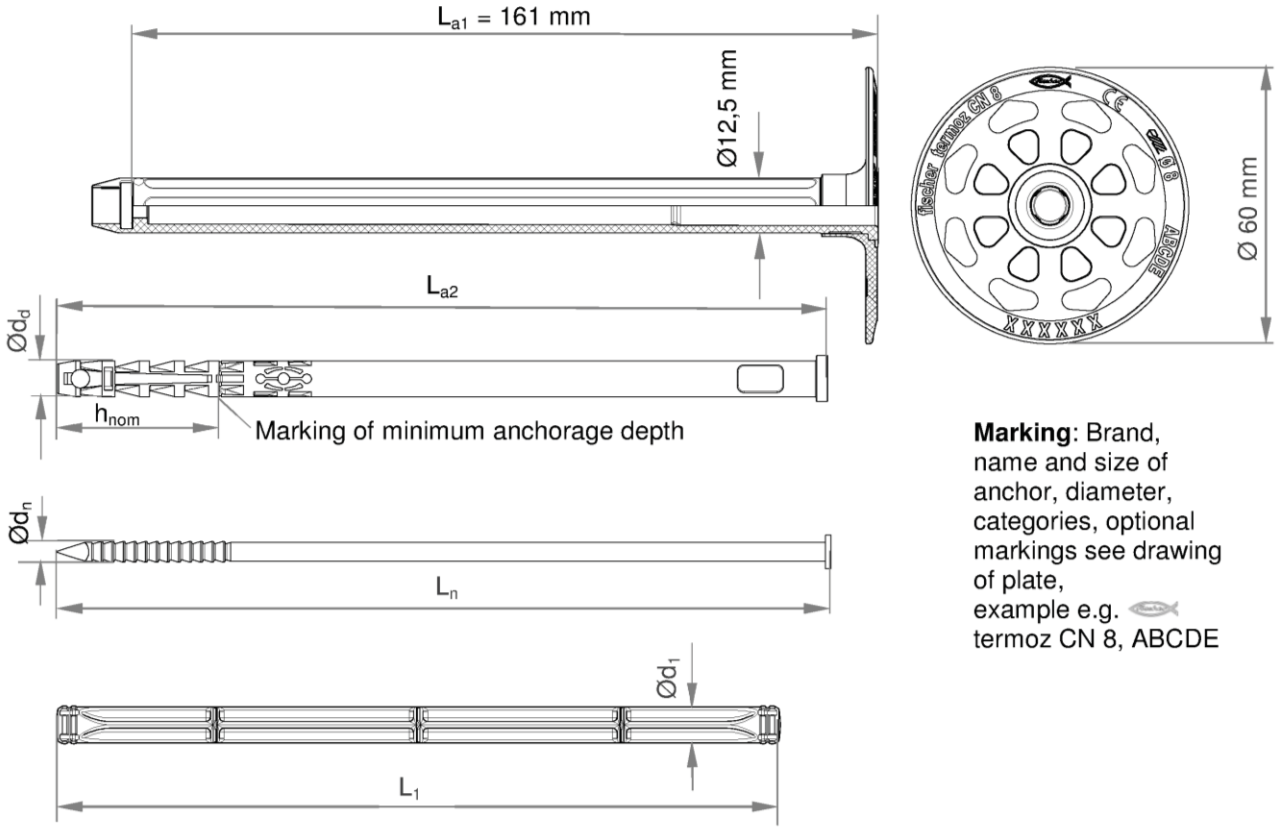

Marking: Brand, name and size of anchor, diameter, categories, optional markings see drawing of plate, example e.g. termoz CN 8, ABCDE

Various lengths of the anchors are possible:

e.g. for termoz CN 8 / 250-390: $250\ mm \geq L_{a1} + L_{a2} \leq 390\ mm$

$L_a = L_{a1} + L_{a2} = L_n + 160{,}5\ mm$

Determination of maximum thickness of insulation: $h_D = L_a - h_{nom} - t_{tol}$

e.g. for termoz CN 8x330: $L_a = 328\ mm$, $h_{nom} = 35\ mm$, $t_{tol} = 10\ mm$

$h_D = 328 - 35 - 10 \approx 280\ mm$

Table A3.1: Dimensions termoz CN 8 / 250-390

Anchor type	Anchor sleeve		Nail	Plastic cylinder	
	Ø d_d [mm]	**h_{nom}** [mm]	**Ø d_n** [mm]	**L_1** [mm]	**Ø d_1** [mm]
termoz CN 8 / 250-390	8	35/55[1)]	4,5	157	8

[1)] Only for use cat. E

fischer termoz CN 8 | fischer termoz CN 8 R	**Annex A3**
Product description Dimensions	

termoz CN 8 R / 110-230

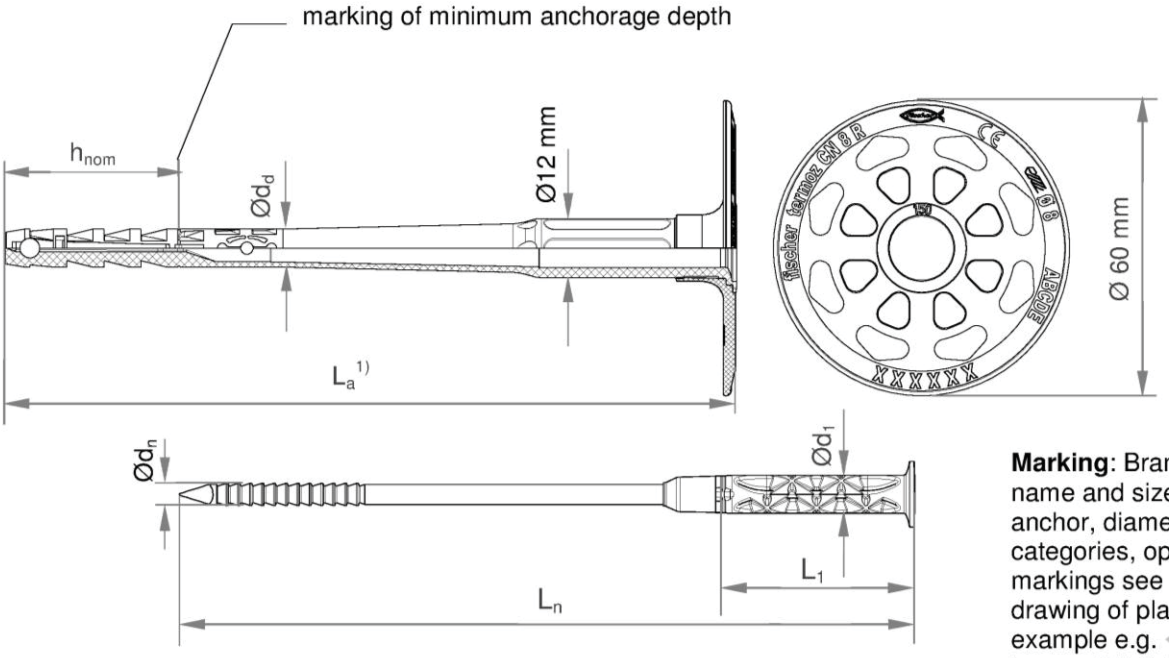

Marking: Brand, name and size of anchor, diameter, categories, optional markings see drawing of plate, example e.g. termoz CN 8 R ABCDE

1) Various lengths of the anchors are possible:

e.g. for termoz CN 8 R / 110-230: 110 mm ≥ L_a ≤ 230 mm
$L_a = L_n + 1{,}5$ mm

Determination of maximum thickness of insulation: $h_D = L_a - h_{nom} - t_{tol}$

e.g. for termoz CN 8x150 R: $L_a = 148$ mm, $h_{nom} = 35$ mm, $t_{tol} = 10$ mm

$h_D = 148 - 35 - 10 \approx 100$

Table A4.1: Dimensions termoz CN 8 R / 110-230

Anchor type	Anchor sleeve		Nail	Plastic cylinder	
	Ø d_d [mm]	**h_{nom}** [mm]	**Ø d_n** [mm]	**L_1** [mm]	**Ø d_1** [mm]
termoz CN 8 R / 110-230	8	35/55 2)	4,5	40	8

2) Only for use cat. E

termoz CN 8 R / 250–310

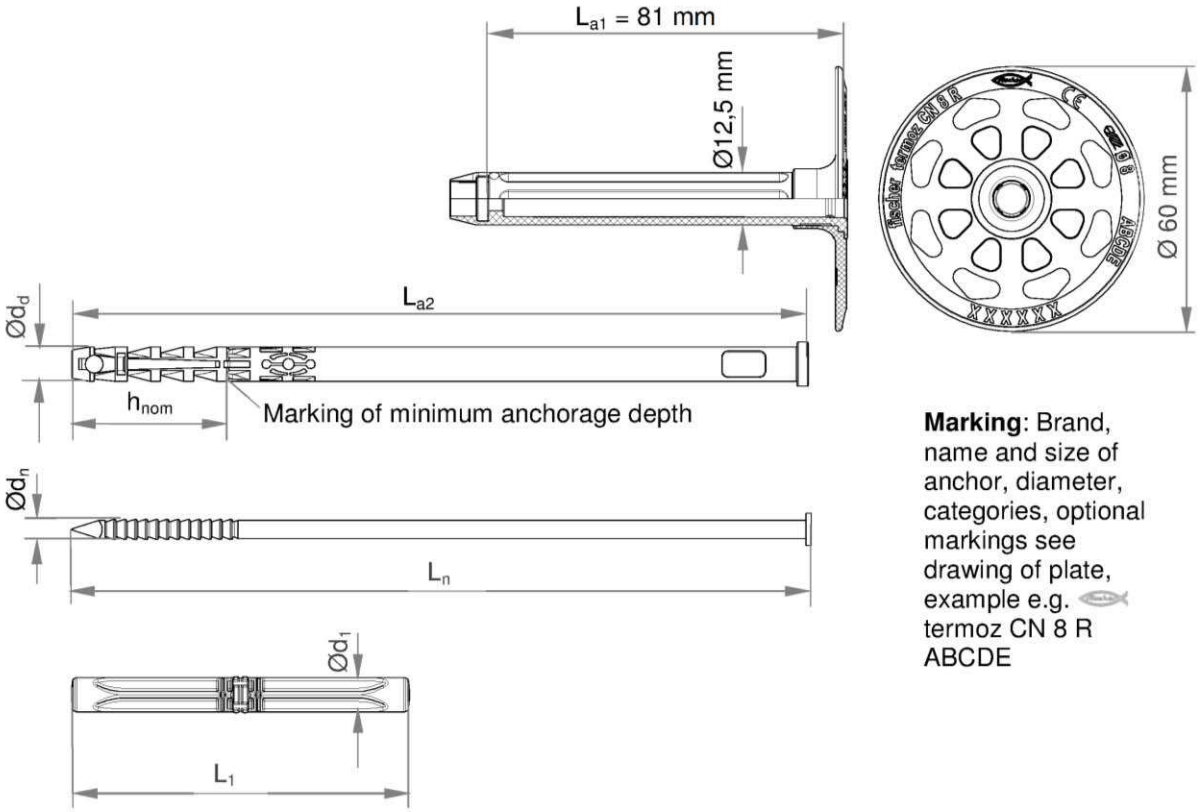

Marking: Brand, name and size of anchor, diameter, categories, optional markings see drawing of plate, example e.g. termoz CN 8 R ABCDE

Various lengths of the anchors are possible:

e.g. for termoz CN 8 R / 250-310: $250\ mm \geq L_{a1} + L_{a2} \leq 310\ mm$
$L_a = L_{a1} + L_{a2} = L_n + 80{,}5\ mm$

Determination of maximum thickness of insulation: $h_D = L_a - h_{nom} - t_{tol}$

e.g. for termoz CN 8x250 R: $L_a = 248\ mm$, $h_{nom} = 35\ mm$, $t_{tol} = 10\ mm$

$h_D = 248 - 35 - 10 \approx 200\ mm$

Table A5.1: Dimensions termoz CN 8 R / 250–310

Anchor type	Anchor sleeve		Nail	Plastic cylinder	
	Ø d_d [mm]	**h_{nom}** [mm]	**Ø d_n** [mm]	**L_1** [mm]	**Ø d_1** [mm]
termoz CN 8 R / 250-310	8	35/55[1)]	4,5	77	8

[1)] Only for use cat. E

Table A6.1: Material

Designation	Material
Anchor sleeve	PP, colour: grey
Shaft termoz CN 8 / 250-390 or CN 8 R 250-310	PA6 GF, colour: grey
Plastic cylinder termoz CN 8 / 250-390 or CN 8 R 250-310 R	PA6 GF
Specific compound nail termoz CN 8 / 110-230 or Specific compound nail termoz CN 8 R / 110-230	PA6 GF (plastic part of compound nail) Steel (f_{yk} ≥ 400 N/mm²; f_{uk} ≥ 500 N/mm²) gal Zn A2G or A2F according to EN ISO 4042:1999
Specific nail termoz CN 8 / 250-390 or CN 8 R / 250-310	Steel (f_{yk} ≥ 400 N/mm²; f_{uk} ≥ 500 N/mm²) gal Zn A2G or A2F according to EN ISO 4042:1999
Anchor plate	PA6 GF colour: grey, orange, red, green, yellow, blue
Slip-on plate	PA6 GF colour: grey, orange, red, green, yellow, blue

Drawing of the slip-on plates

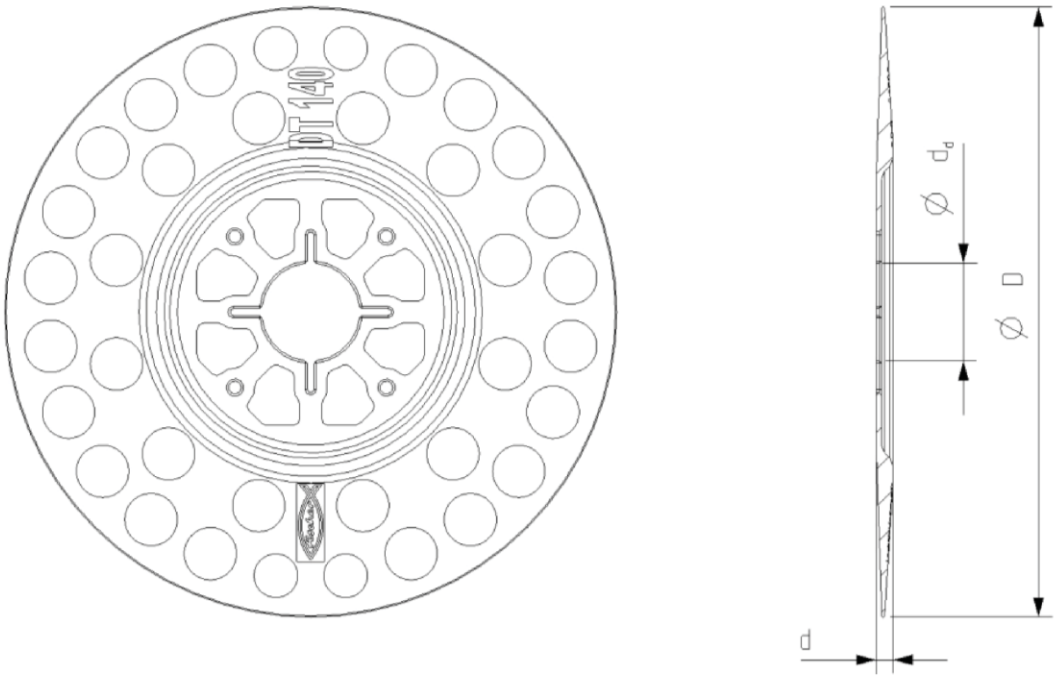

Table A6.2: Slip-on plates, diameters and material

Slip-on plate	Ø D [mm]	Ø d_d [mm]	d [mm]	Material
DT 90 / 110 / 140	90 / 110 / 140	22,5	3,9	PA6 GF

fischer termoz CN 8 | fischer termoz CN 8 R	**Annex A6**
Product description Material Slip-on plates combined with termoz CN 8 | termoz CN 8 R	

Specifications of intended use

Anchorages subject to:

- The anchor may only be used for transmission of wind suction loads and shall not be used for the transmission of dead loads of the external thermal insulation composite system (ETICS).

Base materials:

- Normal weight concrete (use category A), according to Annex C1.
- Solid masonry (use category B), according to Annex C1.
- Hollow or perforated masonry (use category C), according to Annex C1.
- Lightweight aggregate concrete (use category D), according to Annex C1.
- Autoclaved aerated concrete (use category E), according to Annex C1.
- For other base materials of the use categories A, B, C, D and E the characteristic resistance of the anchor may be determined by job site tests acc. to ETAG 014 Edition February 2011, Annex D.

Temperature Range:

- 0°C to +40°C (max. short term temperature +40°C and max. long term temperature +24°C).

Design:

- The anchorages are designed in accordance with ETAG 014 Edition February 2011 under the responsibility of an engineer experienced in anchorages and masonry work.
- Verifiable calculation notes and drawings are prepared taking account of the loads to be anchored. The position of the anchors is indicated on the design drawings.
- Fasteners are only to be used for multiple fixings of ETICS.

Installation:

- Drilling method according to Annex C1.
- Anchor installation carried out by appropriately qualified personnel and under the supervision of the person responsible for technical matters on the site.
- Installation temperature from 0°C to +40°C
- Exposure to UV due to solar radiation of the anchor not protected by rendering ≤ 6 weeks.

Table B2.1: Installation parameters

Anchor type				termoz CN 8 | CN8 R
Drill hole diameter	d_0	=	[mm]	8
Cutting diameter of drill bit	d_{cut}	≤	[mm]	8,45
Depth of drilled hole to deepest point	h_1	≥	[mm]	45/65[1)]
Overall plastic anchor embedment depth in the base material	h_{nom}	≥	[mm]	35/55[1)]

[1)] Only for use cat. "E"

Table B2.2: Minimum distances and spacings

				termoz CN 8 | CN8 R
Minimum thickness of member	h_{min}	=	[mm]	100
Minimum spacing	s_{min}	=	[mm]	100
Minimum edge distance	c_{min}	=	[mm]	100

Scheme of distance and spacing

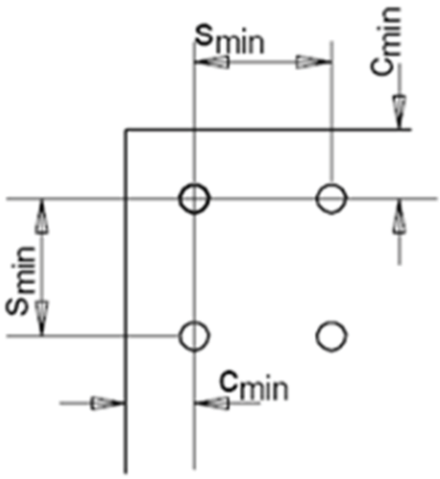

fischer termoz CN 8 | fischer termoz CN 8 R	**Annex B2**
Intended use Installation parameters Minimum distances and spacings	

Installation instructions

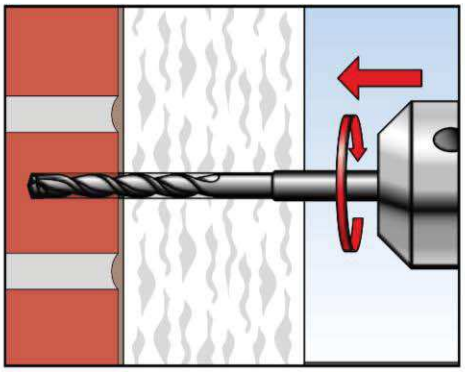

1. Drill hole by corresponding drilling method.

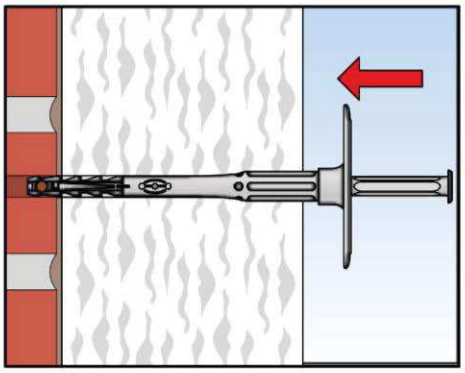

2. Insert anchor manually until the plate covers the surface of the insulation material.

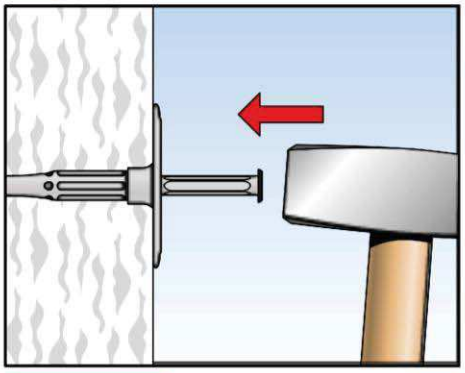

3. Set anchor by hammer-blows.

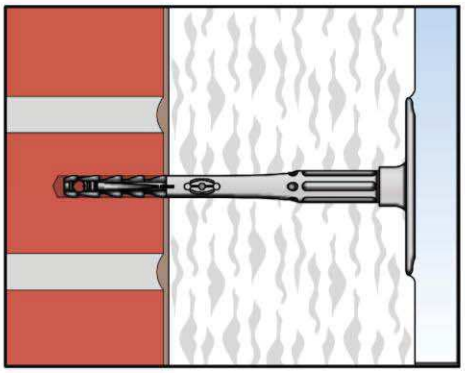

4. Correctly installed anchor.

fischer termoz CN 8 | fischer termoz CN 8 R	**Annex B3**
Intended use Installation instruction	

Table C1.1: Characteristic resistance NRk in [kN] to tension loads for single anchor

Base material	Use cat.[1)]	Bulk density class ρ [kg/dm³]	Min. compressive strength f_b [N/mm²]	Remarks	Drill method [2)]	Characteristic resistance N_{Rk} to tension loads [kN] **termoz CN 8 termoz CN 8 R**
Concrete ≥ C12/15 - C50/60 EN 206:2013	A	-	-	-	H	**0,9**
Solid clay bricks e.g. acc. to DIN 105-100:2012-01, EN 771-1:2011, Mz	B	≥ 2,0	12	Cross section reduced up to 15% by perforation vertically to the resting area	H	**0,9**
Calcium silicate solid bricks, e.g. acc. to DIN V 106:2005-10, EN 771-2:2011, KS	B	≥ 1,8	12	Cross section reduced up to 15% by perforation vertically to the resting area	H	**0,9**
Solid concrete blocks e.g. acc. to DIN V 18153-100: 2005-10, EN 771-3:2011,Vbn	B	≥ 2,0	20	Cross section reduced up to 15% by perforation vertically to the resting area	H	**0,75**
Lightweight concrete solid blocks e.g. acc. to DIN V 18152-100: 2005-10, EN 771-3:2011, Vbl	B	≥ 1,4	8	-	H	**0,6**
Vertically perforated clay bricks e.g. acc. to DIN 105-100:2012-01, EN 771-1:2011, HLz	C	≥ 1,0	12	Cross section reduced between 15% and 50% by perforation vertically to the resting area. Exterior web thickness ≥ 12 mm	R	**0,6**
Hollow calcium silicate brick, acc. to DIN V 106:2005-10, EN 771-2:2011, KSL	C	≥ 1,4	12	Cross section reduced between 15% and 50% by perforation vertically to the resting area. Exterior web thickness ≥ 23 mm	H	**0,5**
			20			**0,75**
Lightweight concrete hollow blocks e.g. acc. to DIN V 18151-100: 2005-10, EN 771-3:2011, Vbn	C	≥ 1,2	10	-	H	**0,6**
Lightweight aggregate concrete, LAC EN 1520:2011	D	≥ 0,8	4	Minimum solid brick or minimum exterior web thickness t = 50 mm	H	**0,4**
			6			**0,6**
Autoclaved aerated concrete blocks, AAC e.g. acc. to DIN V 4165-100:2005-10, EN 771-4:2011	E	> 0,4	4	-	R	**0,3**
		> 0,6	6			**0,3**
Partial safety factor for anchor resistance[3)]					γ_M	**2,0**

1) See Annex B1 2) R = Rotary drilling | H = Hammer drilling 3) In absence of other national regulations

fischer termoz CN 8 | fischer termoz CN 8 R

Performance
Characteristic resistance

Annex C1

Table C2.1: Point thermal transmittance acc. to EOTA Technical Report TR 025:2007-06

Anchor type	Thickness of insulation material h_D [mm]	Point thermal transmittance χ [W/K]
termoz CN 8 / 110-230	60 - 80	0,001
	> 80 - 180	0,000
termoz CN 8 / 250-350	200 - 300	0,000
termoz CN 8 / 370-390	> 300 - 340	0,001
termoz CN 8 R / 110-230	> 60 - 120	0,001
	> 120 - 160	0,002
	180	0,001
termoz CN 8 R / 250-310	200 - 260	0,001

Table C2.2: Plate stiffness acc. to EOTA Technical Report TR 026:2007-06

Anchor type	Size of the anchor plate [mm]	Load resistance of the anchor plate [kN]	Plate stiffness [kN/mm]
termoz CN 8 / CN 8 R	60	1,7	0,6

Table C2.3: Displacements

Base material		Tension load N [kN]	Displacements δ [mm]
Concrete ≥ C12/15 – C50/60, acc. to EN 206:2013		0,30	0,3
Clay brick e.g. acc. to DIN 105-100:2012-01, EN 771-1:2011, Mz 12		0,30	0,5
Calcium silicate solid bricks e.g. acc. to DIN V 106:2005-10 EN 771-2:2011, KS 12		0,30	0,3
Vertically perforated clay brick e.g. acc. to DIN 105-100:2012-01 EN 771-1:2011, Hlz 12		0,2	0,2
Hollow calcium silicate brick e.g. acc. to DIN V 106:2005-10 EN 771-2:2011, KSL 12		0,15	0,2
Hollow calcium silicate brick e.g. acc. to DIN V 106:2005-10 EN 771-2:2011, KSL 20		0,25	0,3
Solid concrete blocks e.g. acc. to, DIN V 18153-100:2005-10 EN 771-3:2011, Vbn		0,25	0,3
Hollow brick lightweight concrete e.g. acc. to DIN V 18153-100:2005-10 EN 771-3:2011, Hbl 4		0,2	0,2
Lightweight concrete solid blocks e.g. acc. to DIN V 18152-100:2005-10, EN 771-3:2011, Vbl		0,2	0,2
Lightweight aggregate concrete e.g. acc. to EN 1520:2011	LAC 4	0,15	0,3
	LAC 6	0,20	
Autoclaved aerated concrete blocks e.g. acc. to DIN V 4165-100:2005-10, EN 771-4:2011	AAC 4	0,10	0,2
	AAC 6	0,10	0,3

fischer termoz CN 8 | fischer termoz CN 8 R	**Annex C2**
Performance Point thermal transmittance | Plate stiffness Displacements	