PROHLÁŠENÍ O VLASTNOSTECH

DoP 0234

pro fischer TermoZ CS 8 / fischer TermoZ CS II 8 (Plastová kotva pro ukotvení vnějších tepelně izolačních kompozitních systémů s omítkou) CS

1. Jedinečný identifikační kód typu výrobku: **DoP 0234**

2. Zamýšlené/zamýšlená použití: **Šroubovací plastová kotva pro ukotvení vnějších tepelně izolačních kompozitních systémů s omítkou do betonu a zdiva.**
   Viz. dodatek, obzvláště Přílohy B1- B4

3. Výrobce: **fischerwerke GmbH & Co. KG, Klaus-Fischer-Str. 1, 72178 Waldachtal, Německo**

4. Zplnomocněný zástupce: **–**

5. Systém/systémy POSV: **2+**

6. Evropský dokument pro posuzování: **EAD 330196-01-0604, Edition 07/2017**
   Evropské technické posouzení: **ETA-14/0372; 2021-03-26**
   Subjekt pro technické posuzování: **ETA-Danmark A/S**
   Oznámený subjekt/oznámené subjekty: **2873 TU Darmstadt**

7. Deklarovaná vlastnost/Deklarované vlastnosti:
   Bezpečnost při používání (BWR 4)

Charakteristická únosnost:	Charakteristická únosnost při zatížení tahem:	Přílohy C1-C4
	Minimální okrajová vzdálenost:	Přílohy B2-B3
	Minimální osová vzdálenost:	Přílohy B2-B3
Posuny:	Zatížení tahem s dílčím součinitelem:	Přílohy C6, C7
	Posuny:	Přílohy C6, C7
Tuhost rozšiřujícího talíře:	Průměr rozšiřujícího talíře:	Příloze C6
	Odolnost rozšiřujícího talíře proti zatížení:	Příloze C6
	Tuhost rozšiřujícího talíře:	Příloze C6

Úspora energie a retence tepla (BWR 6)

Prostup tepla:	Bodový činitel prostupu tepla kotvy:	Přílohy C5
	Tloušťka izolační vrstvy ETICS:	Přílohy C5

8. Příslušná technická dokumentace a/nebo specifická technická dokumentace: –

Vlastnosti výše uvedeného výrobku jsou ve shodě se souborem deklarovaných vlastností. Toto prohlášení o vlastnostech se v souladu s nařízením (EU) č. 305/2011 vydává na výhradní odpovědnost výrobce uvedeného výše.

Podepsáno za výrobce a jeho jménem:

Dr. Oliver Geibig, Výkonný ředitel pro obchodní jednotky a inženýrství

Jürgen Grün, Výkonný ředitel pro chemii a kvalitu

Tumlingen, 2021-04-05

Toto PoV bylo připraveno v různých jazykových mutacích. V případě rozporu vždy rozhoduje interpretace verze v anglickém jazyce.

Příloha obsahuje nepovinné a doplňkové informace v anglickém jazyce nad rámec zákonných požadavků.

II SPECIFIC PART OF THE EUROPEAN TECHNICAL ASSESSMENT

1 Technical description of product

Technical description of the product
The screwed-in anchor fischer TermoZ CS 8 and fischer TermoZ CS II 8 for fixing of external thermal insulation composite systems (ETICS) consists of an anchor sleeve made of polypropylene with a diameter of 8 mm and an insulation plate made of glass-fiber reinforced polyamide with a diameter of 60 mm. The color of the anchor sleeve is grey. The special compound screw is made of galvanized steel and glass-fiber reinforced polyamide. The anchor is expanded by screwing the screw into the sleeve. It is possible to install the anchor flush or deep-mounted to the surface of the insulation.

The product description is given in Annex A.

2 Specification of the intended use in accordance with the applicable European Assessment Document (hereinafter EAD)

The performances given in Section 3 are only valid if the anchor is used in compliance with the specifications and conditions given in Annex B1 to B3

The provisions made in this European Technical Assessment are based on an assumed intended working life of the anchor of 25 years.

The indications given on the working life cannot be interpreted as a guarantee given by the producer or Assessment Body, but are to be regarded only as a means for choosing the right products in relation to the expected economically reasonable working life of the works.

3 Performance of the product and references to the methods used for its assessment

3.1 Characteristics of product

Safety in case of fire (BWR 2):
No Performance determined

Safety in use (BWR4):
The essential characteristics are detailed in the Annex from C1 to C4.

Other Basic Requirements are not relevant.

General aspects
The verification of durability is part of testing of the essential characteristics. Durability is only ensured if the specifications of intended use according to Annex B are taken into account.

3.2 Methods of assessment

The assessment of fitness of the anchor for the intended use in relation to the requirements for mechanical resistance and stability and safety in use in the sense of the Basic Requirements 4 has been made in accordance with the EAD 330196-01-0604 Plastic anchors made of virgin or non-virgin material for fixing of external thermal insulation composite systems with rendering.

4 Assessment and verification of constancy of performance (AVCP)

4.1 AVCP system

According to the decision 97/463/EC of the European Commission, the system(s) of assessment and verification of constancy of performance (see Annex V to Regulation (EU) No 305/2011) is 2+.

TermoZ CS 8 / 95-115

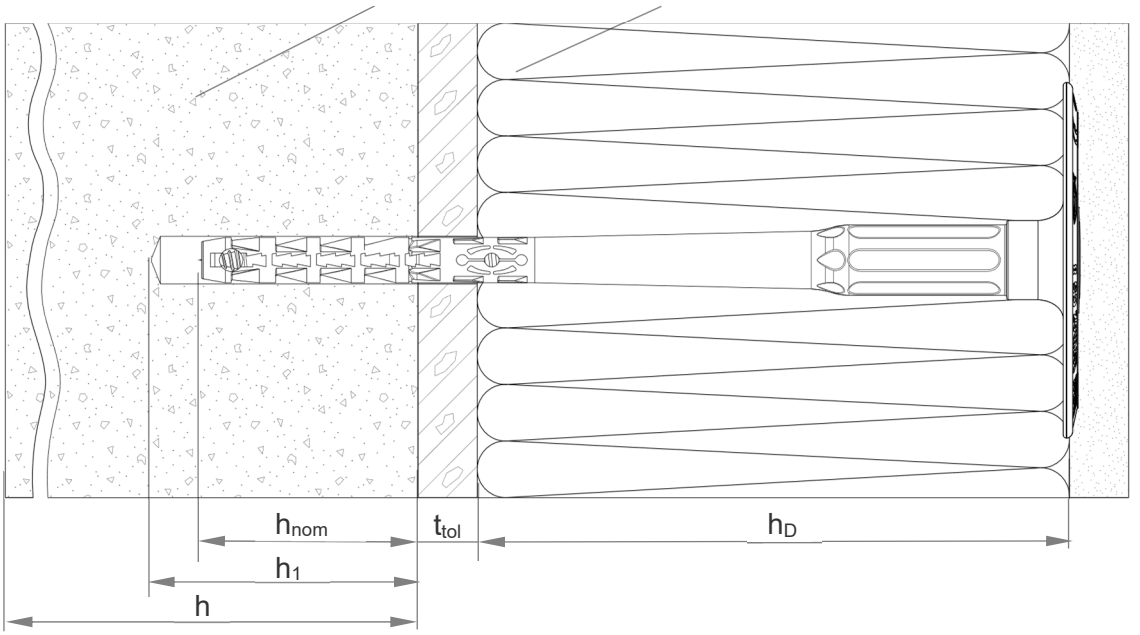

Mounting on the surface

TermoZ CS II 8 / 135-255

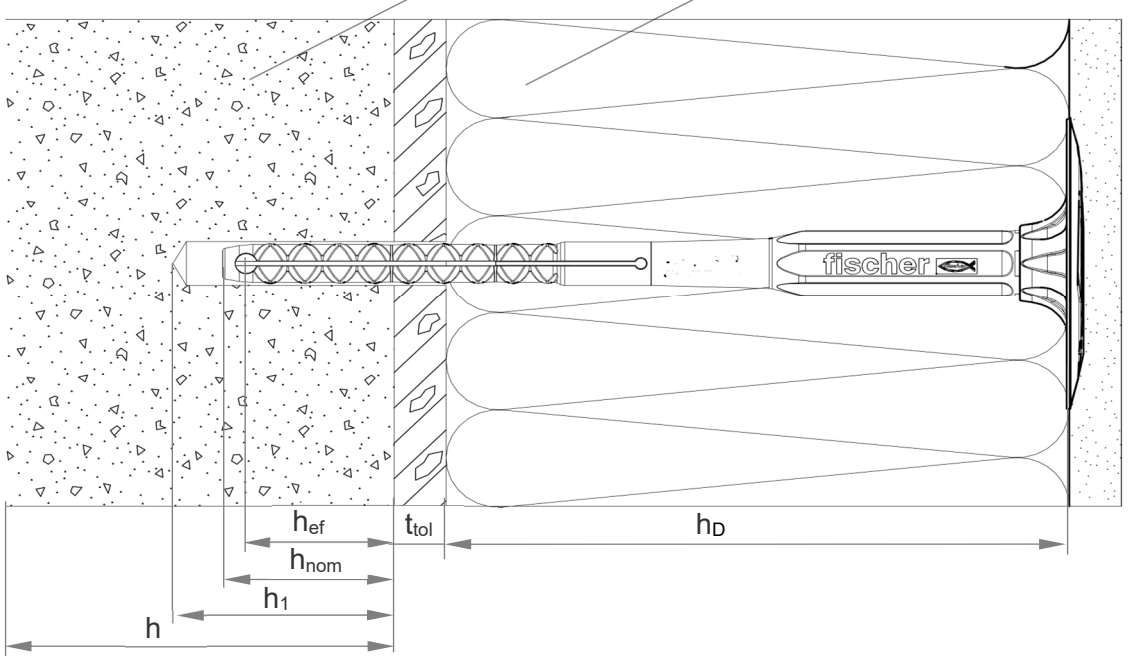

Legend

h_{nom}	=	Overall plastic anchor embedment depth in the base material
h_{ef}	=	Effective anchorage depth in the base material
h_1	=	Depth of drilled hole to deepest point
h	=	Thickness of member (wall)
h_D	=	Thickness of insulation material
t_{tol}	=	Thickness of equalising layer or non–load bearing coating

Figure not to scale

fischer TermoZ CS 8 and fischer TermoZ CS II 8	**Annex A1**
Product description - Installed anchor	of European Technical Assessment ETA-14/0372

TermoZ CS 8 / 275-375

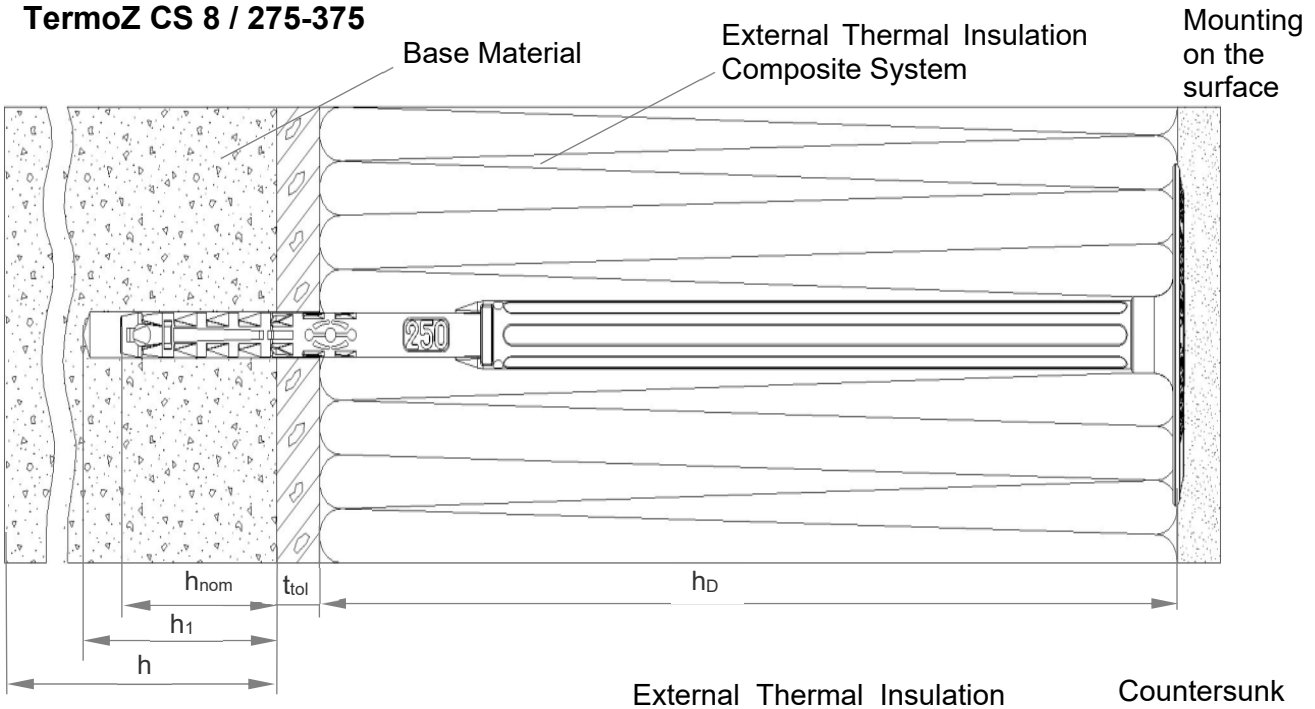

TermoZ CS 8 / 115

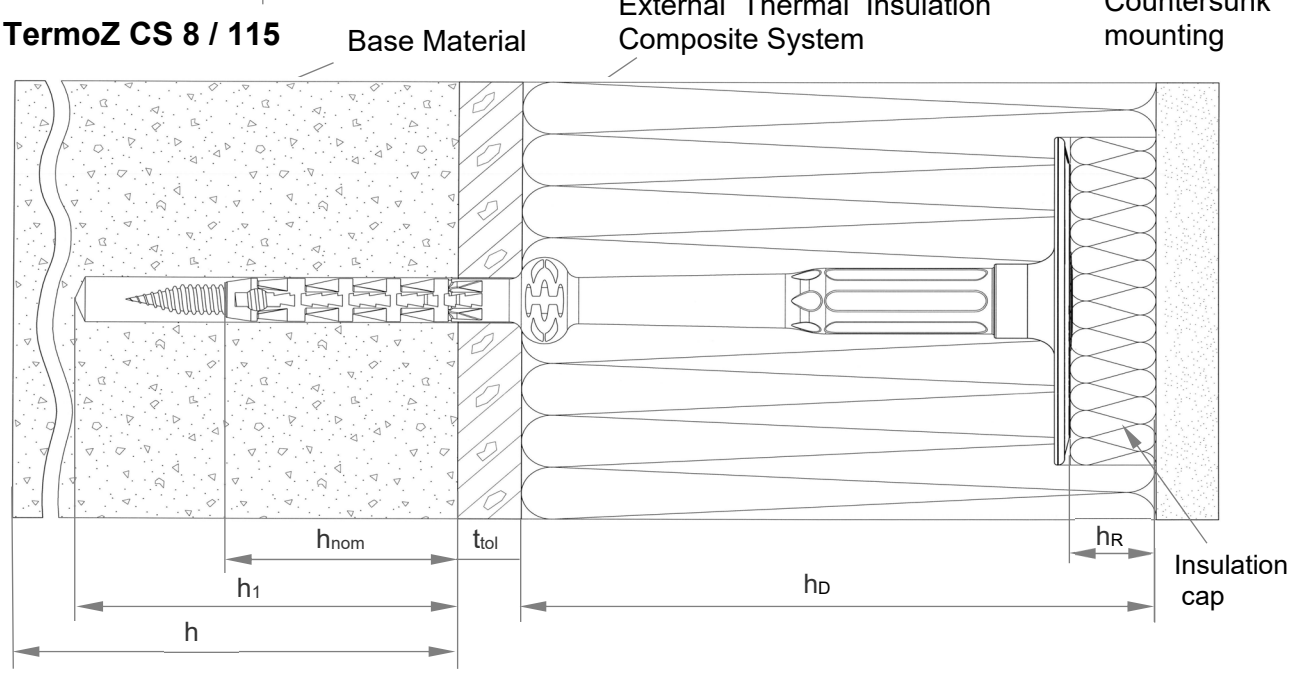

Legend

h_{nom}	=	Overall plastic anchor embedment depth in the base material
h_1	=	Depth of drilled hole to deepest point
h	=	Thickness of member (wall)
h_D	=	Thickness of insulation material
t_{tol}	=	Thickness of equalising layer or non–load bearing coating
h_R	=	Thickness of insulation cap

Figure not to scale

fischer TermoZ CS 8 and fischer TermoZ CS II 8	**Annex A2** of European Technical Assessment ETA-14/0372
Product description - Installed anchor	

TermoZ CS II 8 / 135-255

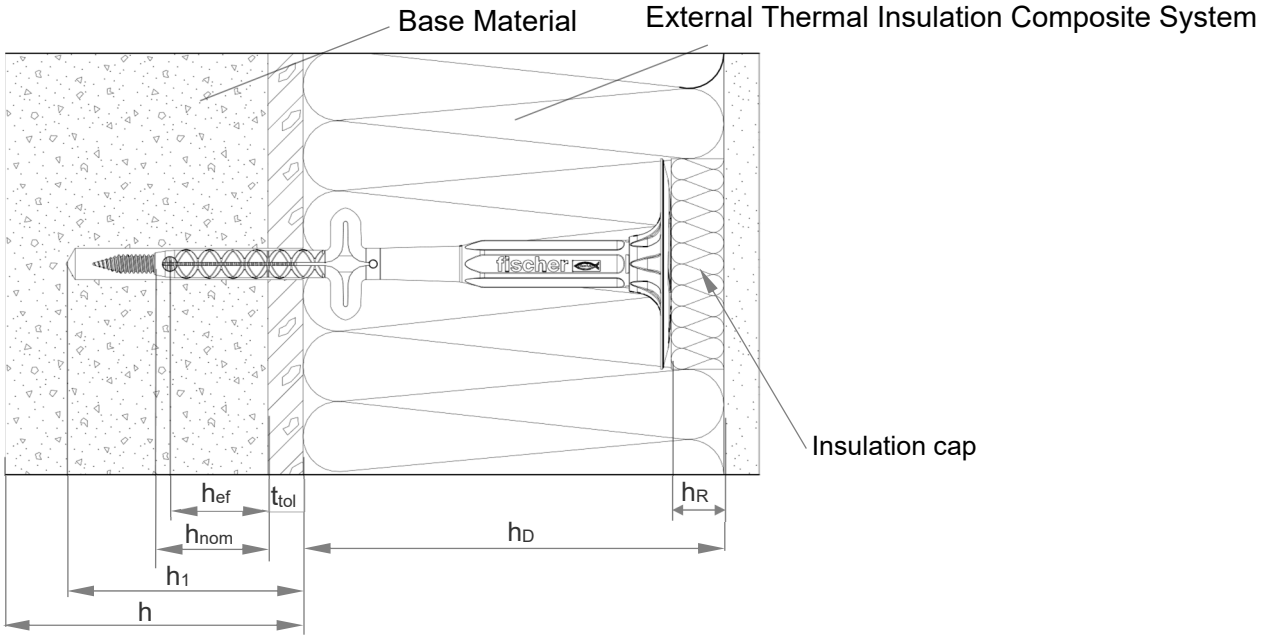

TermoZ CS 8 / 275-375

contersunk mounting

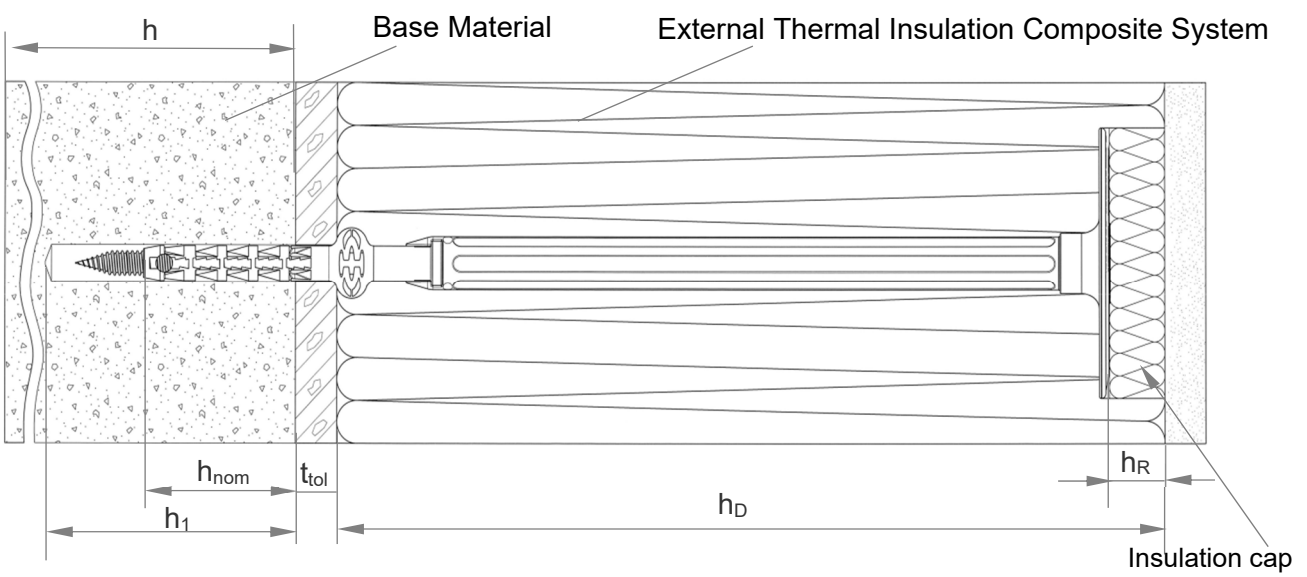

Legend

h_{nom}	=	Overall plastic anchor embedment depth in the base material
h_{ef}	=	Effective anchorage depth in the base material
h_1	=	Depth of drilled hole to deepest point
h	=	Thickness of member (wall)
h_D	=	Thickness of insulation material
t_{tol}	=	Thickness of equalising layer or non–load bearing coating
h_R	=	Thickness of insulation cap

Figure not to scale

fischer TermoZ CS 8 and fischer TermoZ CS II 8	**Annex A3**
Product description - Installed anchor	of European Technical Assessment ETA-14/0372

TermoZ CS 8 / 115 DT 110 V

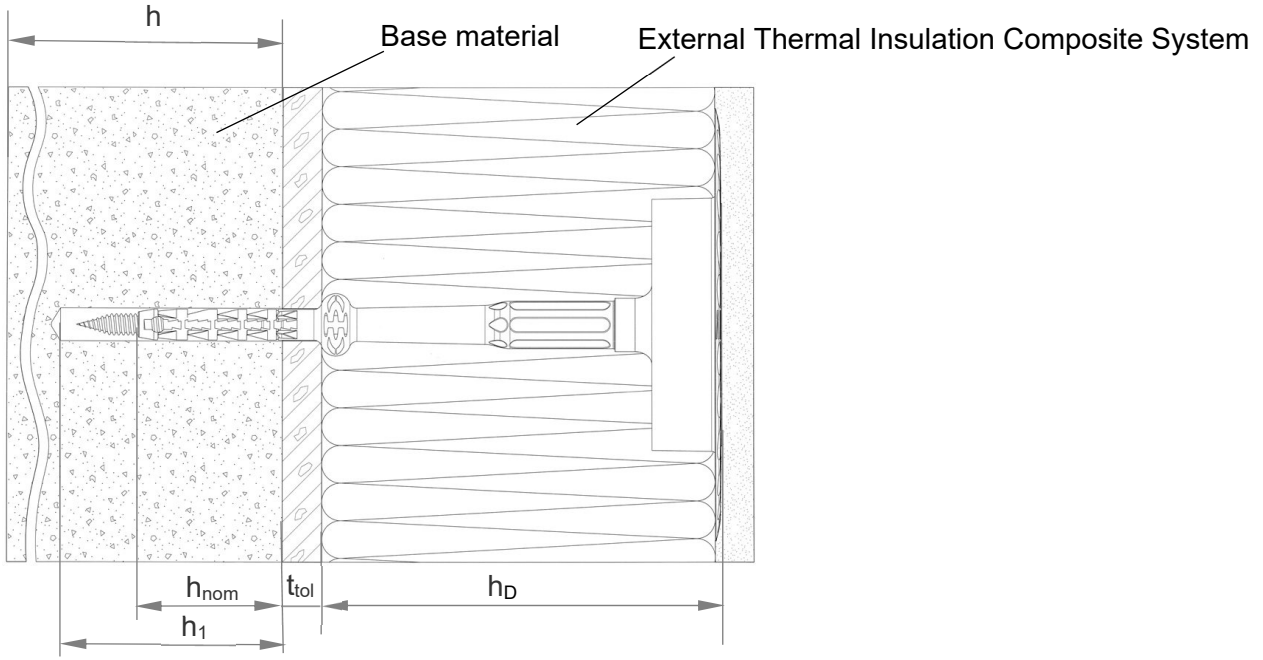

TermoZ CS II 8 / 135-255 DT 110 V

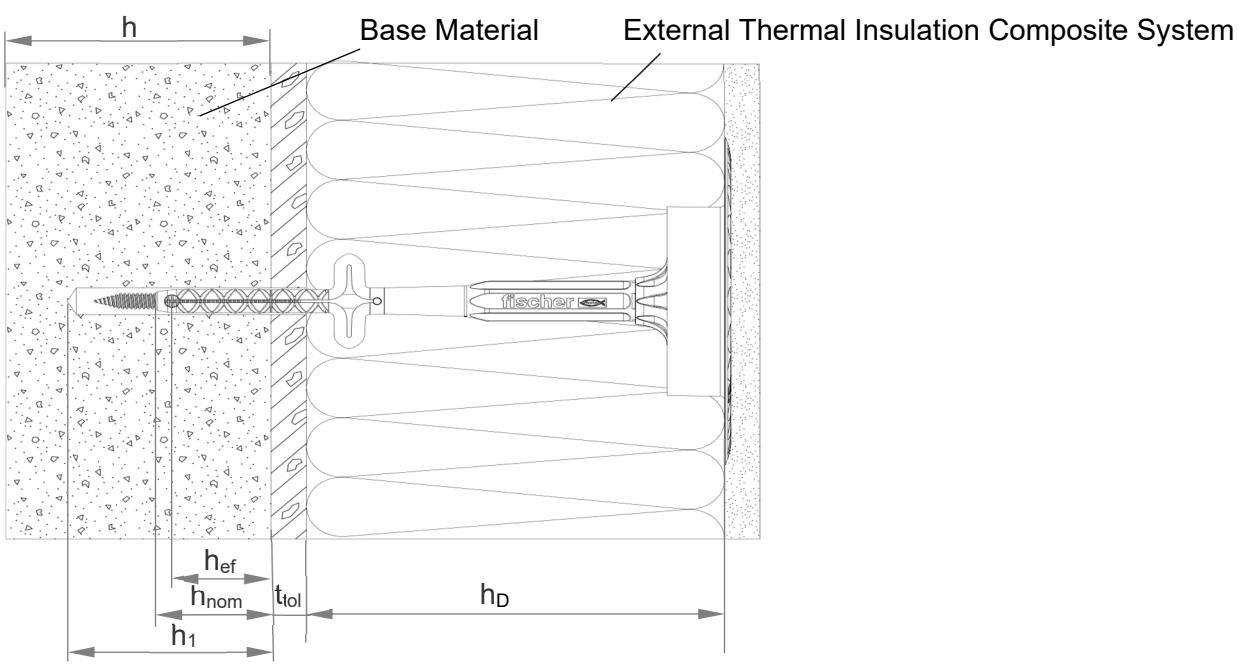

Legend

h_{nom}	=	Overall plastic anchor embedment depth in the base material
h_{ef}	=	Effective anchorage depth in the base material
h_1	=	Depth of drilled hole to deepest point
h	=	Thickness of member (wall)
h_D	=	Thickness of insulation material
t_{tol}	=	Thickness of equalising layer or non–load bearing coating

Figure not to scale

fischer TermoZ CS 8 and fischer TermoZ CS II 8	**Annex A4**
Product description - Installed anchor	of European Technical Assessment ETA-14/0372

TermoZ CS 8 / 250-390 DT 110 V

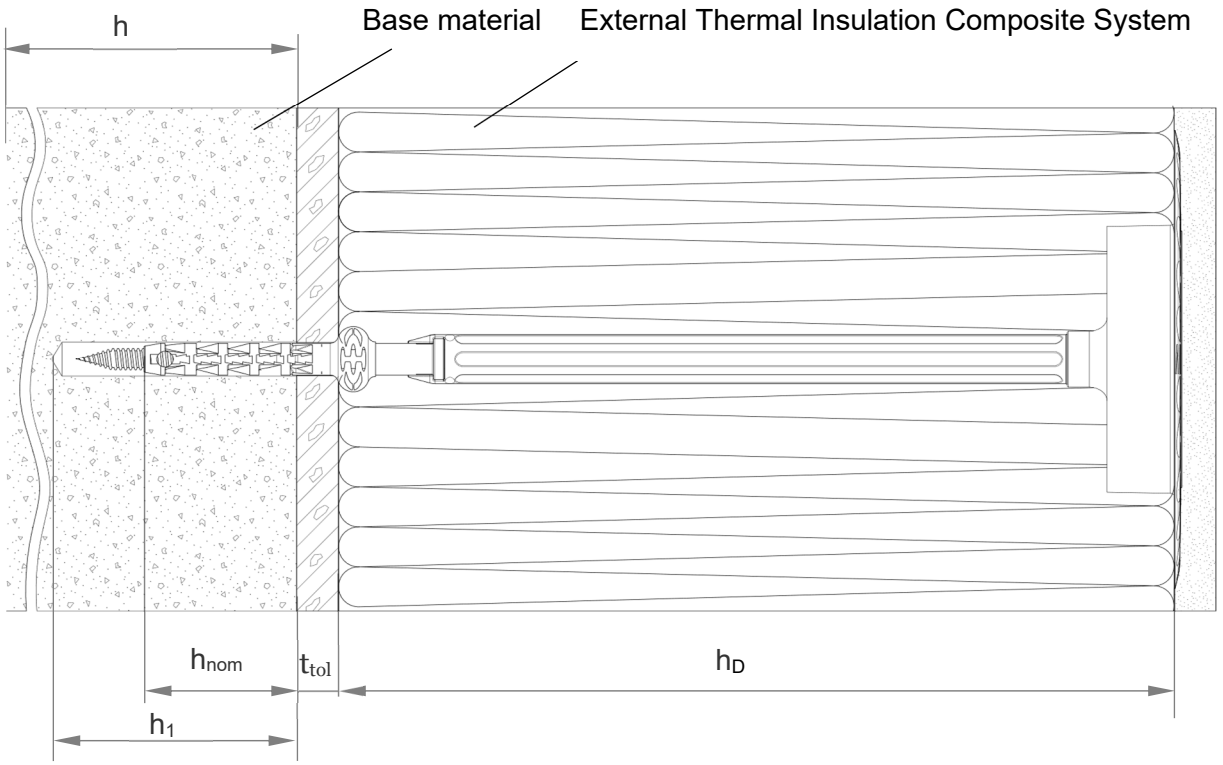

Legend

h_{nom}	=	Overall plastic anchor embedment depth in the base material
h_1	=	Depth of drilled hole to deepest point
h	=	Thickness of member (wall)
h_D	=	Thickness of insulation material
t_{tol}	=	Thickness of equalising layer or non–load bearing coating

Figure not to scale

fischer TermoZ CS 8 and fischer TermoZ CS II 8	**Annex A5**
Product description - Installed anchor	of European Technical Assessment ETA-14/0372

Anchor sleeve / Specific screw for TermoZ CS 8 / 95-115

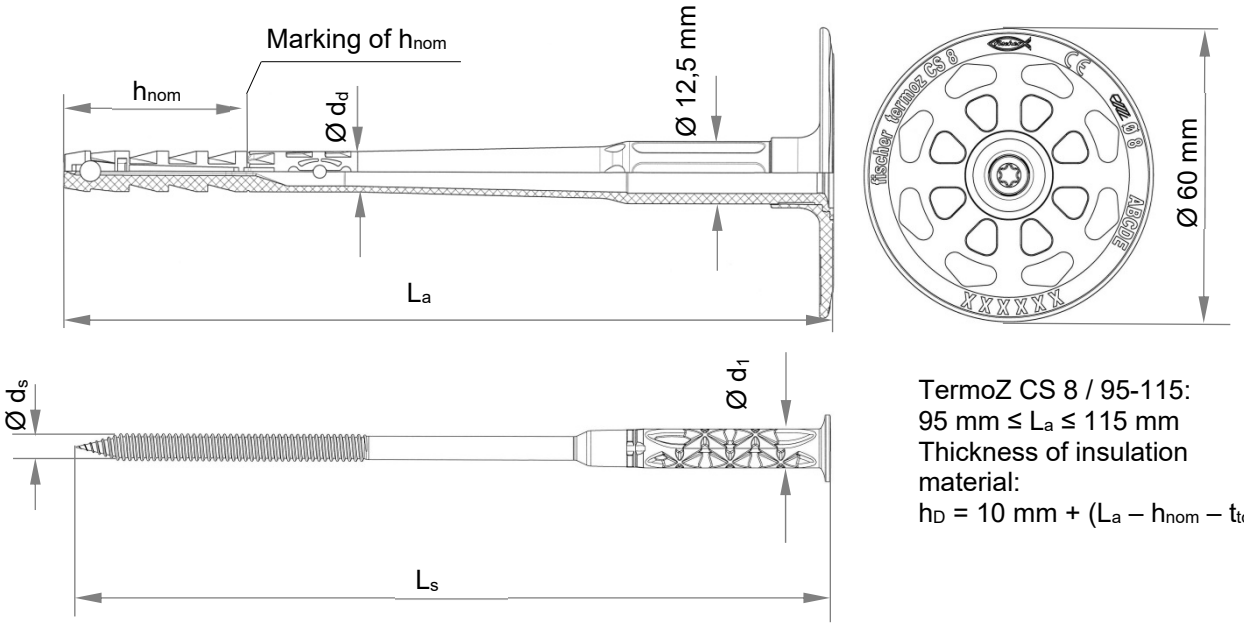

TermoZ CS 8 / 95-115:
95 mm ≤ L_a ≤ 115 mm
Thickness of insulation material:
h_D = 10 mm + (L_a – h_{nom} – t_{tol})

Anchor sleeve / Specific screw for TermoZ CS II 8 / 135-255

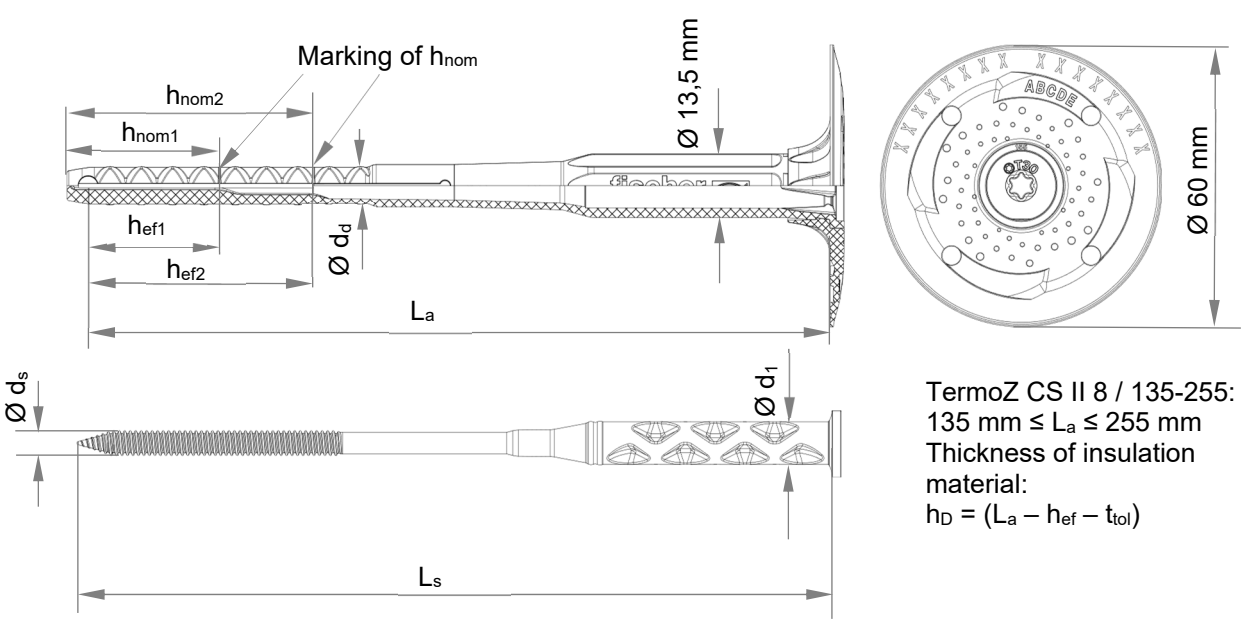

TermoZ CS II 8 / 135-255:
135 mm ≤ L_a ≤ 255 mm
Thickness of insulation material:
h_D = (L_a – h_{ef} – t_{tol})

Figure not to scale

fischer TermoZ CS 8 and fischer TermoZ CS II 8	**Annex A6**
Product description - Dimensions	of European Technical Assessment ETA-14/0372

Setting tool with SDS adapter or hexagonal adapter available for TermoZ CS 8 / 95-115 and TermoZ CS II 8 / 135-255

Optional: plain surface setting

Countersunk setting of anchor

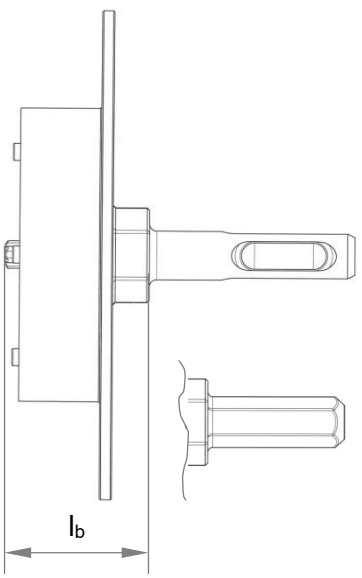

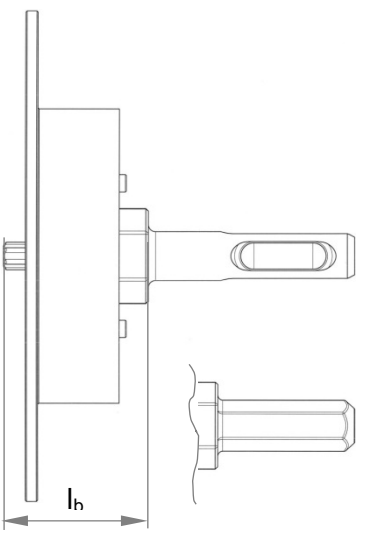

Polystyrene or mineral wool caps

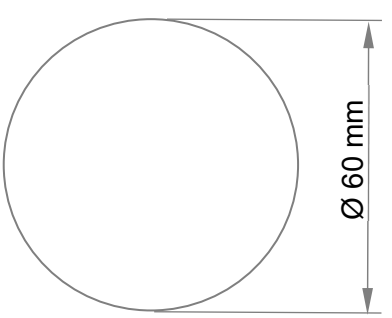

Figure not to scale

fischer TermoZ CS 8 and fischer TermoZ CS II 8	**Annex A7**
Product description - Dimensions	of European Technical Assessment ETA-14/0372

Shaft / Anchor sleeve / Specific screw for TermoZ CS 8 / 275-375

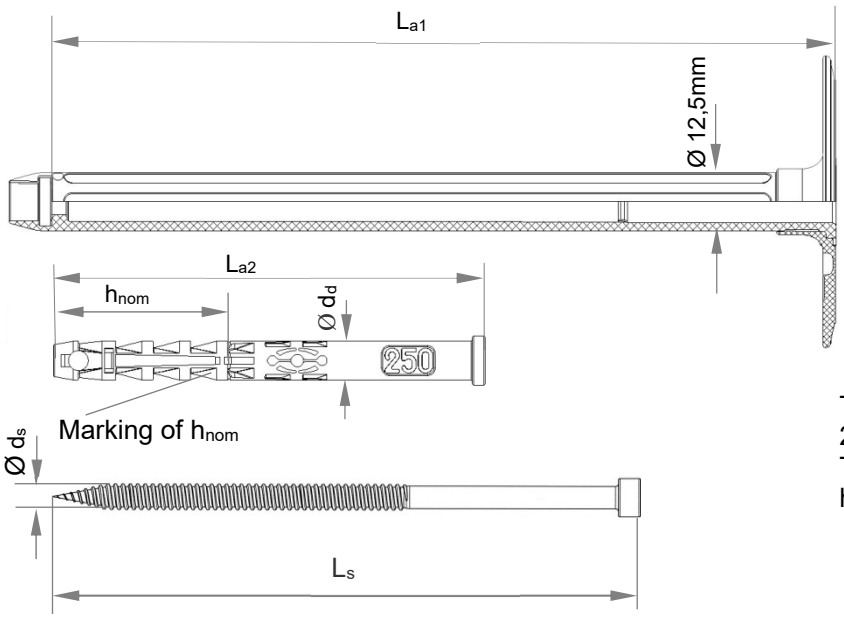

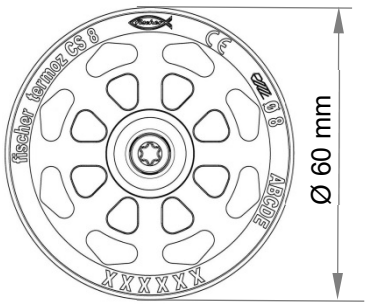

TermoZ CS 8 / 275-375:
275mm ≤ L_a ≤ 375 mm
Thickness of insulation material:
$h_D = 10mm + (L_{a1} + L_{a2}) - h_{nom} - t_{tol}$

Setting tool with SDS adapter or hexagonal adapter available

Countersunk setting of anchor

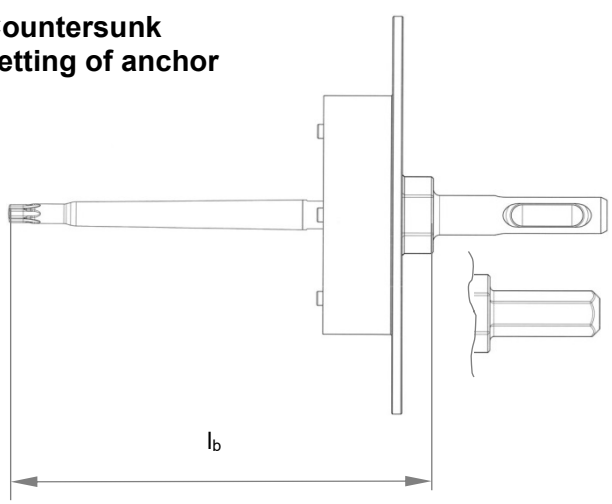

Optional: plain surface setting

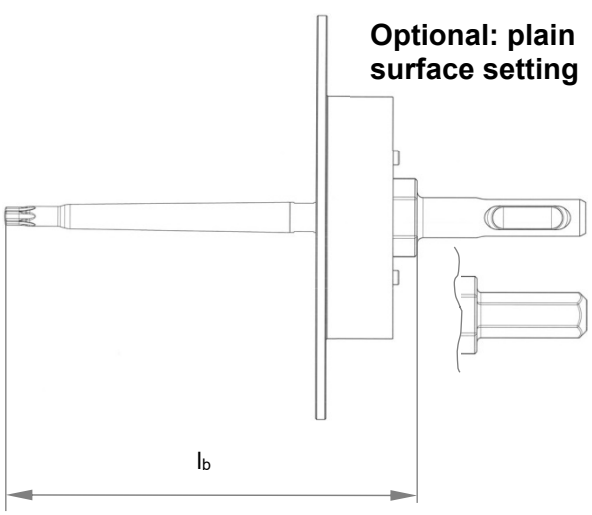

Polystyrene or mineral wool caps

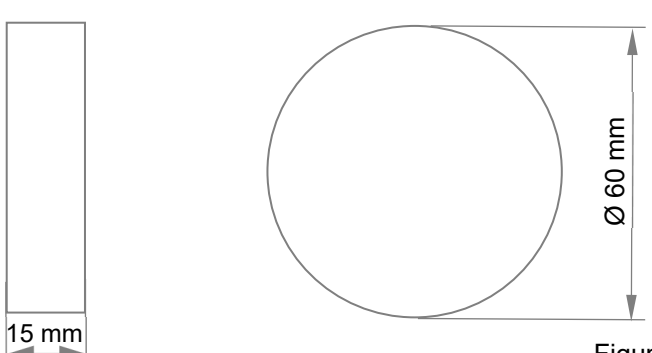

Figure not to scale

fischer TermoZ CS 8 and fischer TermoZ CS II 8	**Annex A8**
Product description - Dimensions	of European Technical Assessment ETA-14/0372

TermoZ CS 8 / 115 DT 110 V

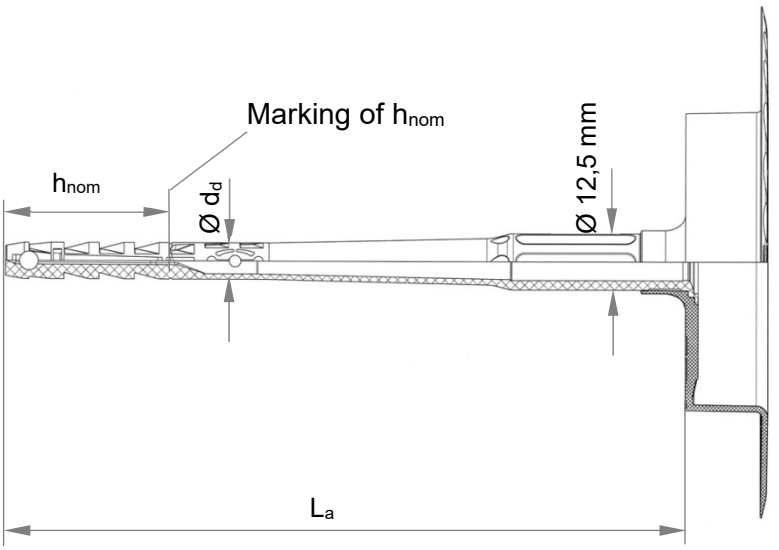

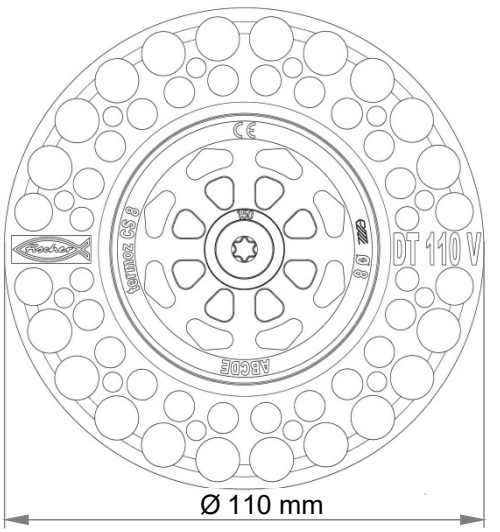

TermoZ CS 8 / 95-115:
95 mm ≤ L_a ≤ 115 mm
Thickness of insulation material:
h_D = 10 mm + (L_a – h_{nom} – t_{tol})

TermoZ CS II 8 / 135-255 DT 110

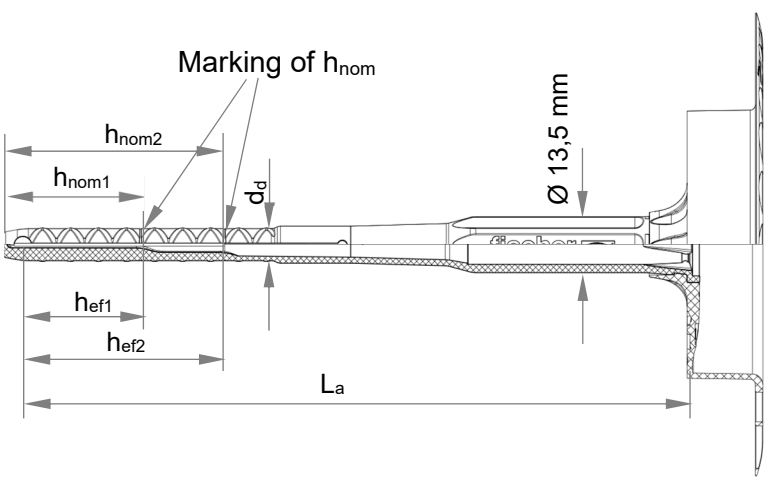

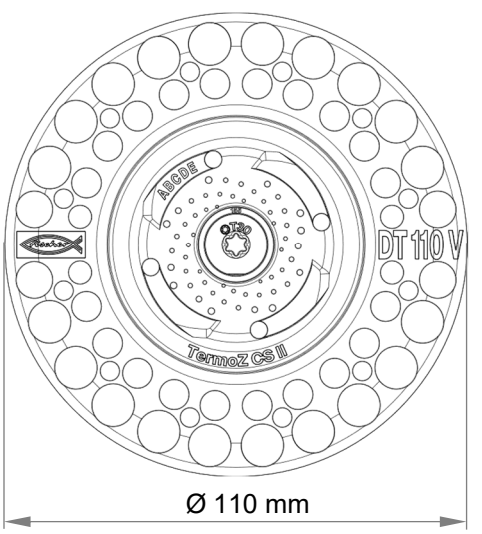

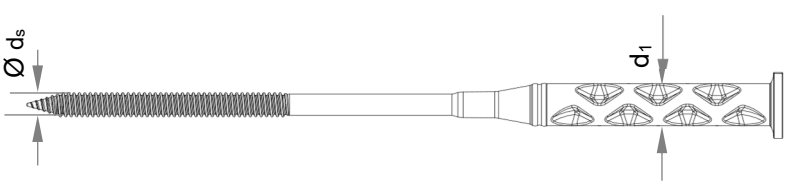

TermoZ CS II 8 / 135-255:
135 mm ≤ L_a ≤ 255 mm
Thickness of insulation material:
h_D = (L_a – h_{ef} – t_{tol})

Figure not to scale

fischer TermoZ CS 8 and fischer TermoZ CS II 8	**Annex A9**
Product description - Dimensions	of European Technical Assessment ETA-14/0372

TermoZ CS 8 / 115 DT 110 V and TermoZ CS II 8 / 135-255 DT 110 V

Countersunk Setting tool with SDS adapter or hexagonal adapter available

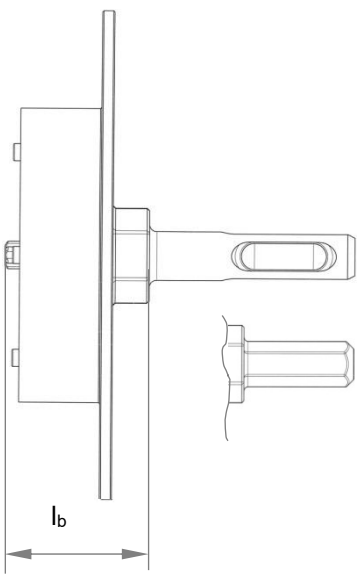

Polystyrene or mineral wool caps

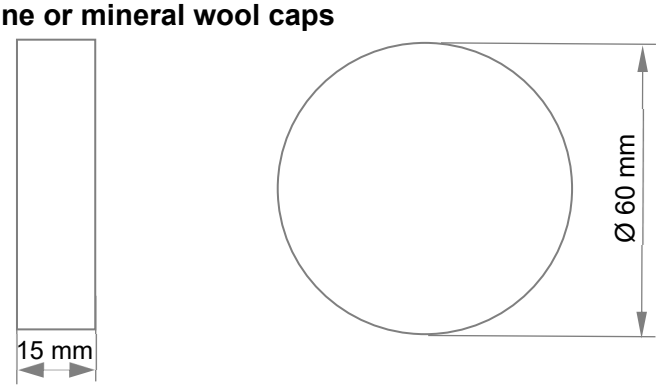

Figure not to scale

fischer TermoZ CS 8 and fischer TermoZ CS II 8	**Annex A10**
Product description - Dimensions	of European Technical Assessment ETA-14/0372

TermoZ CS 8 / 275-375 DT 110 V

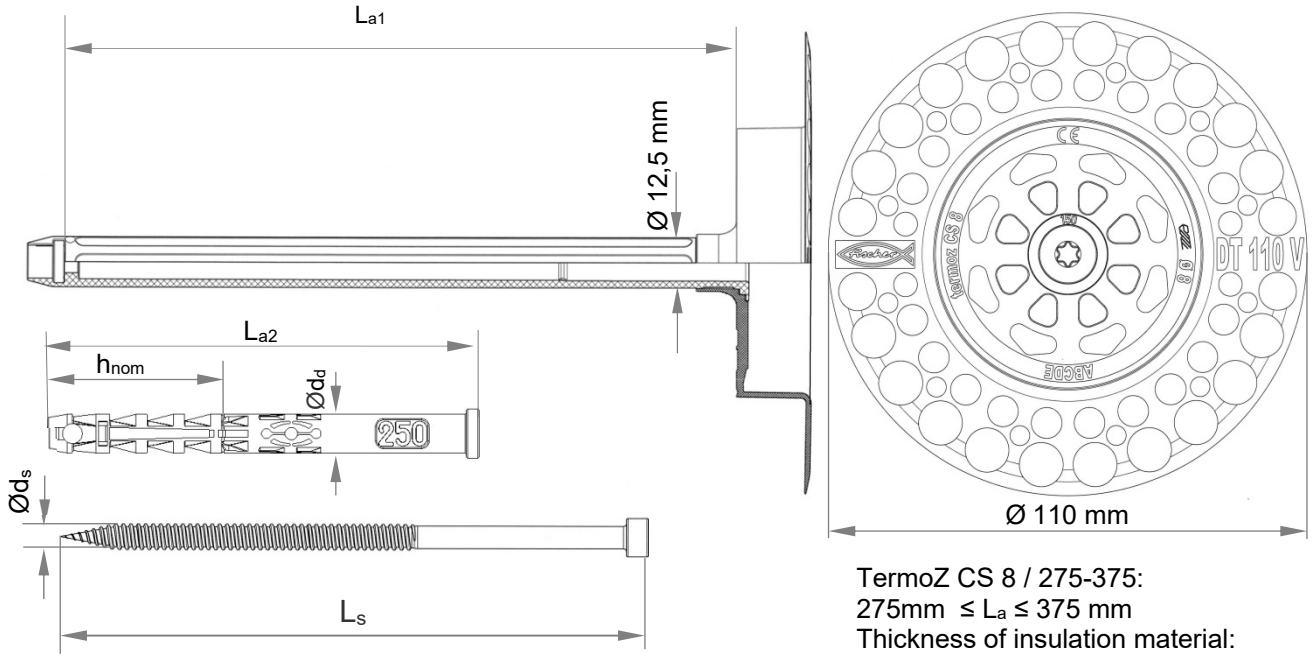

TermoZ CS 8 / 275-375:
275mm ≤ L_a ≤ 375 mm
Thickness of insulation material:
$h_D = 10mm + (L_{a1} + L_{a2}) - h_{nom} - t_{tol}$

Countersunk Setting tool with SDS adapter or hexagonal adapter available

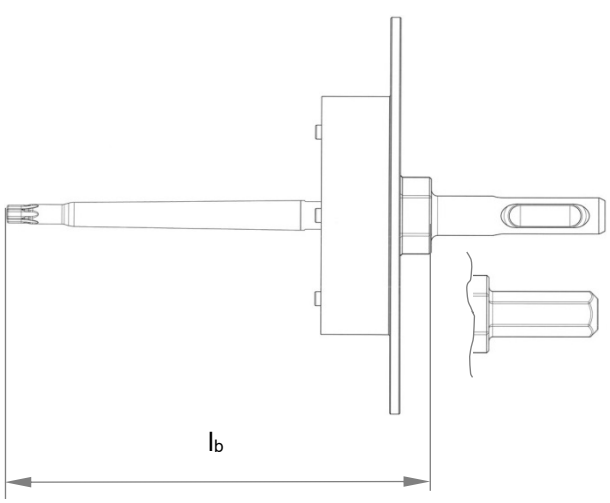

Polystyrene or mineral wool caps

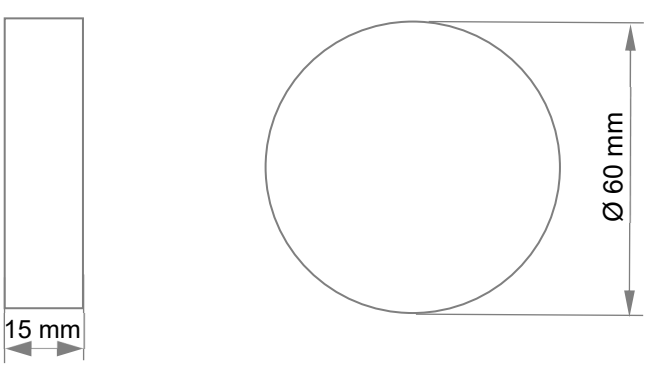

Figure not to scale

fischer TermoZ CS 8 and fischer TermoZ CS II 8	**Annex A11**
Product description - Dimensions	of European Technical Assessment ETA-14/0372

Table A12.1: Slip-on plates, diameters and material

	Designation
Name and size of anchor	TermoZ CS 8 / TermoZ CS II 8
Example	fischer TermoZ CS 8 (optional) CE (optional) Ø 8 ABCDE (optional) and xxxxx additional marks possible fischer TermoZ CS II 8 (optional) CE (optional) Ø 8 ABCDE (optional) and xxxxx additional marks possible

Table A12.2: Dimensions [mm]

Anchor type	Anchor sleeve			Shaft		Specific screw			Length of bits l_b	
	Ø d_d	h_{nom}	h_{ef}	L_a	(L_{a1}+L_{a2})	Ø d_s	l_s	Ø d_1	l_b [mm]	size
TermoZ CS 8 95-115	8	35	-	95-115	-	5,4	L_a + 10 mm	8	30	T30
TermoZ CS II 8 135-255	8	32,5 52,5	25 45	135-255	-	5,4	L_a + 10 mm	9,5	30	T30
TermoZ CS 8 Renovation type 275-295	8	35	-	-	275-295	5,4	(L_{a1} + L_{a2}) – 60 mm	-	100	T25
TermoZ CS 8 315-375	8	35	-	-	315-375	5,4	(L_{a1} + L_{a2}) – 140 mm	-	180	T25

Table A12.3: Dimensions [mm]

Anchor type	Anchor sleeve			Shaft		Specific screw			Length of bits l_b	
	Ø d_d	h_{nom}	h_{ef}	L_a	(L_{a1}+L_{a2})	Ø d_s	l_s	Ø d_1	l_b [mm]	size
TermoZ CS 8 115 DT 110 V	8	35	-	115	-	5,4	L_a + 10 mm	8	30	T30
TermoZ CS II 8 135-255 DT110 V	8	32,5 52,5	25 45	135-255	-	5,4	L_a + 10 mm	9,5	30	T30
TermoZ CS 8 Renovation type 275-295 DT110 V	8	35	-	-	275-295	5,4	(L_{a1} + L_{a2}) – 60 mm	-	100	T25
TermoZ CS 8 315-375 DT 110 V	8	35	-	-	315-375	5,4	(L_{a1} + L_{a2}) – 140 mm	-	180	T25

Table A13.1: Materials

Designation	Material
Anchor sleeve	PP colour: grey
Shaft (TermoZ CS 8 / 275-375)	PA6 GF colour: grey
Specific compound screw (TermoZ CS 8 95-115) or specific screw (TermoZ CS 8 / 275-375) or specific compound screw (TermoZ CS II 8 135-255)	PA6 GF with Steel gal Zn A2G or A2F acc. to EN ISO 4042:2018-11 Steel gal Zn5-Ag or Zn5-An acc. to EN ISO 4042:2018-11 or stainless steel 1.4362 duplex coating, 1.4401, 1.4571, 1.4529 acc. to EN 10088:2014-12
Anchor plate	PA6 GF colour: grey, blue, green, orange, red, yellow, mocca-latte

Drawing of the slip-on plates (e.g. DT 140)

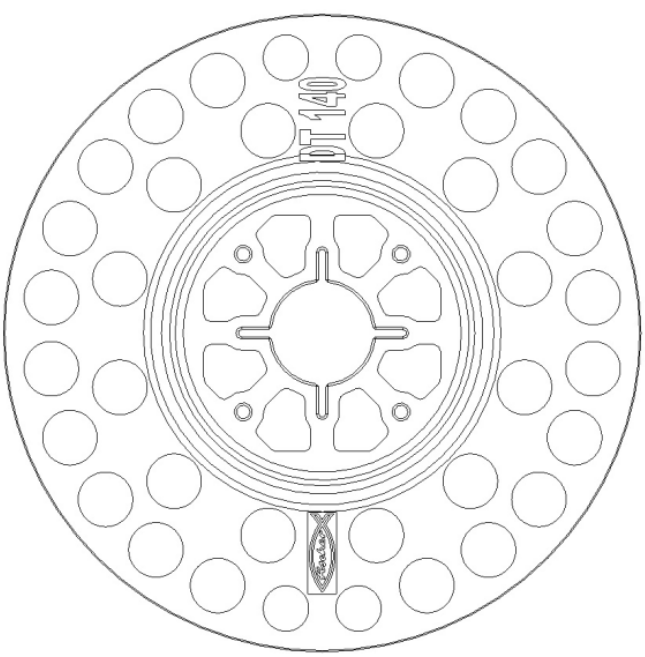

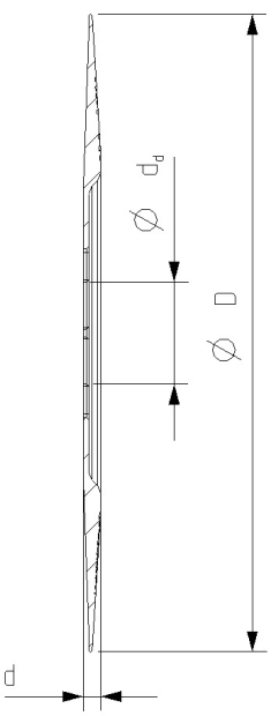

Table A13.2: Slip-on plates, diameters and material

Slip-on plate	Ø D [mm]	Ø d_d [mm]	d [mm]	Materia
DT 90 / DT 110 / DT 140	90 / 110 / 140	22,5	3,9	PA 6 GF

Specifications of intended use

Anchorages subject to:

- The anchor may only be used for transmission of wind suction loads and shall not be used for the transmission of dead loads of the thermal insulation composite system.

Base materials:

- Normal weight concrete (base material group A) according to Annex C1 and C3.
- Solid masonry (base material group B), according to Annex C1 and C3.
- Hollow or perforated masonry (base material group C), according to Annex C1, C2, C3 and C4.
- Lightweight aggregate concrete (base material group D), according to Annex C2 and C4.
- Autoclaved aerated concrete (base material group E), according to Annex C2 and C4.
- For other base materials of the base material groups A, B, C, D and E the characteristic resistance of the anchor may be determined by job site tests according to EOTA Technical Report TR 051 Edition April 2018.

Temperature Range:

- 0°C to +40°C (max. short term temperature +40°C and max. long term temperature +24°C) of the base material

Design:

- The anchorages are designed under the responsibility of an engineer experienced in anchorages and masonry work with the partial safety factors g_M = 2,0 and g_F = 1,5 if there are no other national regulations.
- Verifiable calculation notes and drawings are prepared taking account of the loads to be anchored. The position of the anchors is indicated on the design drawings.
- Fasteners are only to be used for multiple fixings of thermal insulation composite systems.

Installation:

- Drilling method according to Annex C1 to C4.
- Anchor installation carried out by appropriately qualified personnel and under the supervision of the person responsible for technical matters on the site.
- Installation temperature from 0°C to +40°C
- Exposure to UV due to solar radiation of the anchor not protected by rendering ≤ 6 weeks.

Table B2.1: Installation parameters for base material groups A, B, C and D

Anchor type				TermoZ CS 8/95-115 and 275-375	
				Flush	Countersunk
Nominal drill hole diameter	d_0	=	[mm]	**8**	**8**
Cutting diameter of drill bit	d_{cut}	≤	[mm]	**8,45**	**8,45**
Depth of drill hole to deepest point	h_1	≥	[mm]	**45 / 55[1)]**	**60 / 70[1)]**
Overall plastic anchor embedment depth in the base material	h_{nom}	≥	[mm]	**35 / 45[1)]**	**35 / 45[1)]**

[1)] only valid for weather shell acc. to Annex C1

Table B2.2: Installation parameters for base material group "C" only valid for the tested masonry units

Anchor type				TermoZ CS 8/95-115 and 275-375	
				Flush	Countersunk
Nominal drill hole diameter	d_0	=	[mm]	**8**	**8**
Cutting diameter of drill bit	d_{cut}	≤	[mm]	**8,45**	**8,45**
Depth of drill hole to deepest point	h_1	≥	[mm]	**35**	**50**
Overall plastic anchor embedment depth in the base material	h_{nom}	≥	[mm]	**25**	**25**

Table B2.3: Installation parameters for base material group "E"

Anchor type				TermoZ CS 8/95-115 and 275-375	
				Flush	Countersunk
Nominal drill hole diameter	d_0	=	[mm]	**8**	**8**
Cutting diameter of drill bit	d_{cut}	≤	[mm]	**8,45**	**8,45**
Depth of drill hole to deepest point	h_1	≥	[mm]	**65**	**80**
Overall plastic anchor embedment depth in the base material	h_{nom1}	≥	[mm]	**65**	**80**
Depth of drill hole to deepest point	h_2	≥	[mm]	**35**	**35**
Overall plastic anchor embedment depth in the base material	h_{nom2}	≥	[mm]	**55**	**55**

Table B2.4: Anchor distances and dimensions of members

Anchor type				TermoZ CS 8/95-115 and 275-375
Minimum thickness of member	$h^{1)}$	≥	[mm]	**100**
Minimum spacing	s_{min}	=	[mm]	**100**
Minimum edge distance	c_{min}	=	[mm]	**100**

1) not valid for weather shells acc. to Annex C1

Scheme of distances and spacing

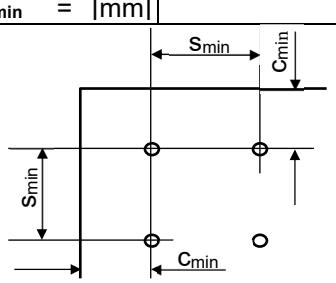

fischer TermoZ CS 8 and fischer TermoZ CS II 8	**Annex B2** of European Technical Assessment ETA-14/0372
Installation parameters for use categories	

Table B3.1: Installation parameters for base material groups A, B, C, D and E

Anchor type				TermoZ CS II 8/135-255	
				Flush	Countersunk
Nominal drill hole diameter	d_0	=	[mm]	**8**	**8**
Cutting diameter of drill bit	d_{cut}	≤	[mm]	**8,45**	**8,45**
Depth of drill hole to deepest point	h_1	≥	[mm]	**40**	**55**
Overall plastic anchor embedment depth in the base material	h_{nom}	≥	[mm]	**32,5**	**32,5**
Effective plastic anchorage depth	h_{ef}	≥	[mm]	**25**	**25**

Table B3.2: Installation parameters alternative option for base material group "E" for higher loads

Anchor type				TermoZ CS II 8/135-255	
				Flush	Countersunk
Nominal drill hole diameter	d_0	=	[mm]	**8**	**8**
Cutting diameter of drill bit	d_{cut}	≤	[mm]	**8,45**	**8,45**
Depth of drill hole to deepest point	h_1	≥	[mm]	**60**	**75**
Overall plastic anchor embedment depth in the base material	h_{nom}	≥	[mm]	**52,5**	**52,5**
Effective plastic anchorage depth	h_{ef}	≥	[mm]	**45**	**45**

Table B3.3: Anchor distances and dimensions of members

Anchor type				TermoZ CS II 8/135-255
Minimum thickness of member	h	≥	[mm]	**100**
Minimum spacing	s_{min}	=	[mm]	**100**
Minimum edge distance	c_{min}	=	[mm]	**100**

Scheme of distances and spacing

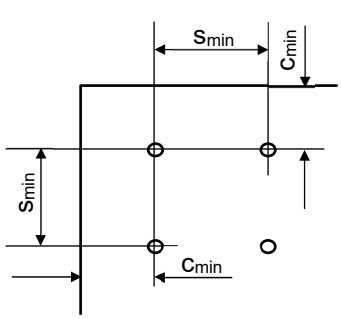

fischer TermoZ CS 8 and fischer TermoZ CS II 8	**Annex B3** of European Technical Assessment ETA-14/0372
Installation parameters for use categories	

Installation instructions for TermoZ CS 8 and CS II 8

Standard setting of anchor (plain surface setting)

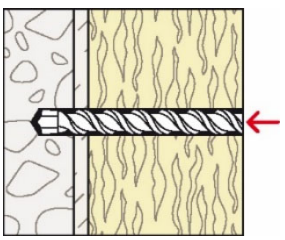

1. Drill hole by corres-ponding drilling method

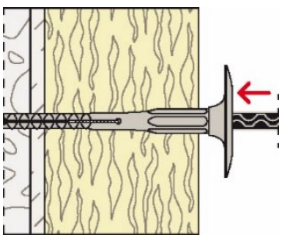

2.Insert anchor manually

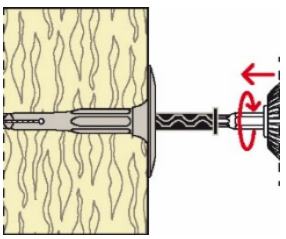

3.Set anchor by machine

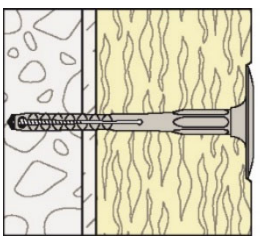

4.Correctly installed anchor

Setting of anchor (plain surface setting) by setting tool

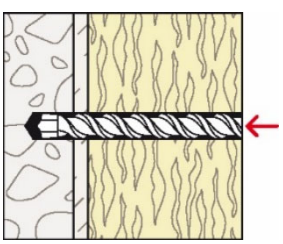

1.Drill hole by corres-ponding drilling method

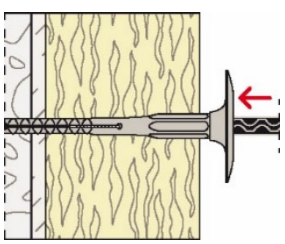

2.Insert anchor manually

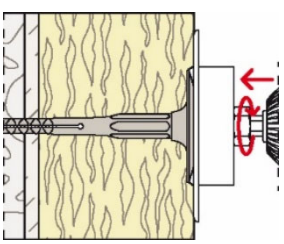

3.Set anchor by setting tool with the machine

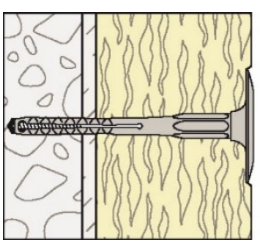

4.Correctly installed anchor

Setting of anchor (countersunk) by setting tool

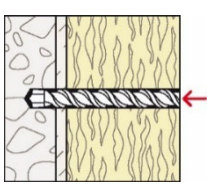

1.Drill hole by corresponding drilling method

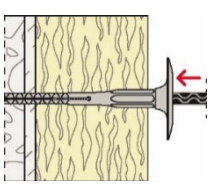

2.Insert anchor manually

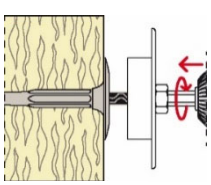

3. Put on setting tool

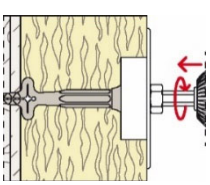

4. Set anchor by setting tool with the machine

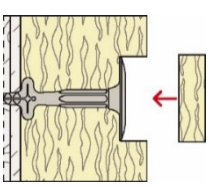

5.Put on polystyrene or mineral wool cap

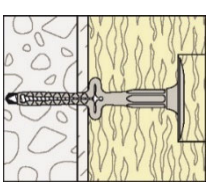

6.Correctly installed anchor

Setting of DT 110 V anchor by setting tool

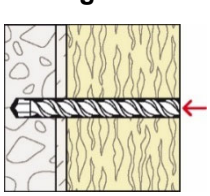

1.Drill hole by corresponding drilling method

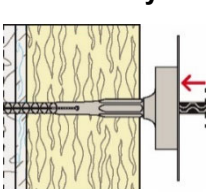

2.Insert anchor manually

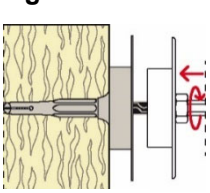

3. Put on setting tool

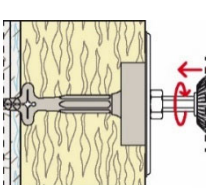

4. Set anchor by setting tool with the machine

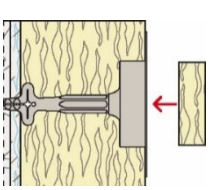

5.Put on polystyrene or mineral wool cap

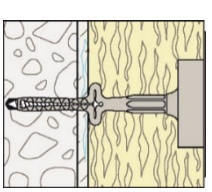

6.Correctly installed anchor

fischer TermoZ CS 8 and fischer TermoZ CS II 8	**Annex B4**
Installation procedure	of European Technical Assessment ETA-14/0372

Table C1.1: Characteristic resistance to tension loads N_{Rk} in concrete and masonry for a single anchor in kN / TermoZ CS 8 / 95-115 and 275-375 for base material groups A, B and C

Base material	Group	Bulk density class ρ [kg/dm³]	Minimum compressive strength f_b [N/mm²]	Remarks	Drill mode[1)]	Characteristic resistance TermoZ CS 8 N_{Rk} [kN]
Concrete ≥ C12/15 to < C50/60	A	EN 206-1:2000		-	H	**1,2**
Concrete C50/60						**1,5**
Weather resistant concrete shell ≥ C20/25	A			h ≥ 42 mm	H	**1,2**
Weather resistant concrete shell C50/60				h ≥ 42 mm		**1,5**
Solid Clay bricks e.g. acc. to EN 771-1:2015, Mz	B	≥ 1,8	20	Cross section reduced up to 15% by perforation vertically to the resting area	H	**1,5**
Calcium silicate solid bricks, e.g. acc. to EN 771-2:2015, KS	B	≥ 1,8	20	Cross section reduced up to 15% by perforation vertically to the resting area	H	**1,5**
			12			**0,9**
Solid lightweight concrete block, e.g. acc. to EN 771-3:2015 Vbl	B	≥ 1,4	8	Cross section reduced up to 15% by perforation vertically to the resting area	H	**0,5**
Solid concrete block, e.g. acc. to EN 771-3:2015, Vbn	B	≥ 2,0	20	Cross section reduced up to 15% by perforation vertically to the resting area	H	**1,2**
			12			**0,75**
Vertically perforated clay bricks e.g. acc. to EN 771-1:2015, HLz	C[2)]	≥ 1,0	12	Cross section reduced between 15% and 50% by perforation vertically to the resting area. Exterior web thickness ≥ 12 mm	R	**0,6**
		≥ 1,6	48			**1,5**
Hollow calcium silicate brick, acc. to EN 771-2:2015, KSL	C[2)]	≥ 1,4	20	Cross section reduced between 15% and 50% by perforation vertically to the resting area. Exterior web thickness ≥ 23 mm	H	**0,9**
			12			**0,5**

[1)] H = Hammer drilling, R = Rotary drilling
[2)] Cat. "C" values valid for reduced anchorage depth 25 mm see Annex B2 Table B2.2

Table C2.1: Charateristic resistance to tension loads N_{Rk} in masonry and aereated concrete for a single anchor in kN / TermoZ CS 8/95-115 and 275-375 for base material groups C, D and E

Base material	Group	Bulk density class ρ [kg/dm³]	Minimum compressive strength f_b [N/mm²]	Remarks	Drill mode[1)]	Characteristic resistance TermoZ CS 8 N_{Rk} [kN]
Hollow brick lightweight concrete, e.g. acc. to EN 771-3:2015 Hbl	C[2)]	≥ 0,9	4	Exterior web thickness ≥ 20 mm	H	**0,5**
Hollow brick concrete, e.g. acc. to EN 771-3:2015 Hbn	C[2)]	≥ 1,2	10	Exterior web thickness ≥ 38 mm	H	**1,2**
			8			**0,9**
			6			**0,75**
			4			**0,5**
Lightweight Aggregate Concrete ≥ LAC 6	D	≥ 0,9	6	EN 1520:2011-06	H	**0,75**
Autoclaved aerated concrete blocks, e.g. AAC acc. to EN 771-4:2015 h_{nom} = 35mm	E	≥ 0,50	4		R	**0,3**
Autoclaved aerated concrete blocks, e.g. AAC acc. to EN 771-4:2015 h_{nom} = 55 mm						**0,6**

[1)] H = Hammer drilling, R = Rotary drilling
[2)] Cat. "C" values valid for reduced anchorage depth 25 mm see Annex B2 Table B2.2

Table C3.1: Characteristic resistance to tension loads N_{Rk} in concrete and masonry for a single anchor in kN / TermoZ CS II 8/135-255 for base material groups A, B and C

Base material	Group	Bulk density class ρ [kg/dm³]	Minimum compressive strength f_b [N/mm²]	Remarks	Drill mode[1)]	Characteristic resistance TermoZ CS II 8 N_{Rk} [kN]
Concrete ≥ C12/15 to ≤ C50/60	A	-		EN 206-1:2000	H	**1,5**
Weather resistant concrete shell ≥ C20/25	A	-	-	EN 206-1:2000 ; h≥ 40 mm	H	**1,5**
Solid Clay bricks e.g. acc. to EN 771-1:2015, Mz	B	≥ 1,8	20	Cross section reduced up to 15% by perforation vertically to the resting area	H	**1,5**
Calcium silicate solid bricks, e.g. acc. to EN 771-2:2015, KS	B	≥ 1,4	20	Cross section reduced up to 15% by perforation vertically to the resting area	H	**1,5**
			12			
Solid lightweight concrete block, e.g. acc. to EN 771-3:2015, Vbl	B	≥ 1,4	8	Cross section reduced up to 15% by perforation vertically to the resting area	H	**1,2**
Solid concrete block, e.g. acc. to EN 771-3:2015, Vbn	B	≥ 2,0	20	Cross section reduced up to 15% by perforation vertically to the resting area	H	**1,5**
			12			
Vertically perforated clay bricks, e.g. acc. to EN 771-1:2015, HLz	C	≥ 0,9	12	Cross section reduced between 15% and 50% by perforation vertically to the resting area. Exterior web thickness ≥ 12 mm	R	**1,0**
			12		H	**0,65**
		≥ 1,6	48		R	**1,5**
			48		H	**1,5**
Hollow calcium silicate brick, e.g. acc. to EN 771-2:2015, KSL	C	≥ 1,4	12	Cross section reduced between 15% and 50% by perforation vertically to the resting area. Exterior web thickness ≥ 16 mm	H	**1,5**

[1)] H = Hammer drilling, R = Rotary drilling

Table C4.1: Char. resistance to tension loads N_{Rk} in masonry and aereated concrete for a single anchor in kN / TermoZ CS II 8/135-255 for base material groups C, D and E

Base material	Group	Bulk density class ρ [kg/dm³]	Minimum compressive strength f_b [N/mm²]	Remarks	Drill mode[1)]	Characteristic resistance TermoZ CS II 8 N_{Rk} [kN]
Hollow brick lightweight concrete, e.g. acc. to EN 771-3:2015, Hbl	C	≥ 0,9	4	Exterior web thickness ≥ 16 mm	H	**0,5**
Hollow brick concrete, e.g. acc. to EN 771-3:2015, Hbn	C	≥ 1,2	10	Exterior web thickness ≥ 38 mm	H	**1,5**
			8			**1,5**
			6			**1,1**
			4			**0,75**
Lightweight Aggregate Concrete ≥ LAC 4	D	≥ 0,9	6	EN 1520:2011-06	H	**1,5**
			4			**0,95**
Autoclaved aerated concrete blocks, e.g. AAC acc. to EN 771-4:2015 h_{nom} = 32,5 mm	E	≥ 0,50	4		R	**0,65**
Autoclaved aerated concrete blocks, e.g. AAC acc. to EN 771-4:2015 h_{nom} = 52,5 mm	E					**1,1**

[1)] H = Hammer drilling, R = Rotary drilling

Table C5.1: Point thermal transmittance acc. to EOTA Technical Report TR 025:2016-05

Anchor type TermoZ CS 8	Thickness of insulation material h_D [mm]	Point thermal transmittance χ [W/K]
TermoZ CS 8 / 95 – 115 flush mounted	60 - 80	0,001
TermoZ CS 8 / 315 – 375 flush mounted	280 - 340	0,001
TermoZ CS 8 / 275 – 295 Renovation type flush mounted	240 - 260	0,002
TermoZ CS 8 / 115 countersunk mounted	80	0,001
TermoZ CS 8 / 315 – 375 countersunk mounted	280 - 340	0,001
TermoZ CS 8 / 275 – 295 Renovation type countersunk mounted	240 - 260	0,001

Table C5.2: Point thermal transmittance acc. to EOTA Technical Report TR 025:2016-05

Anchor Type TermoZ CS II 8 135 - 255	h_{nom} [mm]	Thickness of insulation material h_D [mm]	Point thermal transmittance χ [W/K]				
			Category **A**	Category **B**	Category **C**	Category **D**	Category **E**
Flush mounted	32,5mm	100 - 120	0,001				
		140 - 200	0,002			0,001	
		220	0,002				0,001
	52,5mm	100 - 120	-				0,001
		140 - 220	-				0,001
Countersunk mounted	32,5mm	100 - 120	0,001				
		140 - 200	0,001				
		220	0,002				0,001
	52,5mm	100 - 120	-				0,000
		140 - 220	-				0,001

fischer TermoZ CS 8 and fischer TermoZ CS II 8	**Annex C5** of European Technical Assessment ETA-14/0372
Performance - Point thermal transmittance	

Table C6.1: Plate stiffness acc. to EOTA Technical Report TR 026:2016-05

Anchor type	Max. size of the anchor plate [mm]	Load resistance of the anchor plate [kN]	Plate stiffness [kN/mm]
TermoZ CS 8	60	1,7	0,6
TermoZ CS II 8	60	2,61	1,29

Table C6.2: Displacements of the TermoZ CS 8 / 95–115 and 275-375

Base material	Tension load N_{Rd} [kN]	Displace-ments $\Delta(\delta_N)$ [mm]
Concrete ≥ C12/15 (EN 206-1:2001)	0,40	< 0,3
Concrete ≥ C50/60 (EN 206-1:2001)	0,50	< 0,3
Weather resistant concrete shell ≥ C20/C25 (EN 206-1:2001)	0,40	< 0,4
Weather resistant concrete shell C50/60 (EN 206-1:2001)	0,50	< 0,4
Clay brick e.g. acc. to EN 771-1:2015, Mz 20	0,50	< 0,3
Calcium silicate solid bricks e.g. acc. to EN 771-2 :2015, KS 20	0,50	< 0,3
Calcium silicate solid bricks e.g. acc. to EN 771-2 :2015, KS 12	0,30	
Solid lightweight concrete block e.g. acc. to EN 771-3 :2015, Vbl8	0,17	< 0,2
Solid concrete block e.g. acc. to EN 771-3:2015, Vbn 20	0,40	< 0,3
Solid concrete block e.g. acc. to EN 771-3:2015, Vbn 12	0,25	
Vertically perforated clay brick e.g. acc. to EN 771-1:2015, Hlz 12	0,20	< 0,2
Vertically perforated clay brick e.g. acc. to EN 771-1:2015, Hlz 48	0,50	< 0,3
Hollow calcium silicate brick e.g. acc. to EN 771-2:2015, KSL 20	0,30	< 0,2
Hollow calcium silicate brick e.g. acc. to EN 771-2:2015, KSL 12	0,17	
Hollow brick lightweight concrete e.g. acc. to EN 771-3:2015, Hbl 4	0,17	< 0,1
Hollow brick concrete e.g. acc. to EN 771-3:2015, Hbn 10	0,40	< 0,2
Hollow brick concrete e.g. acc. to EN 771-3:2015, Hbn 8	0,30	
Hollow brick concrete e.g. acc. to EN 771-3:2015, Hbn 6	0,25	
Hollow brick concrete e.g. acc. to EN 771-3:2015, Hbn 4	0,17	
Lightweight Aggregate Concrete ≥ LAC 6 EN 1520:2011-06	0,25	< 0,2
Autoclaved aerated concrete blocks EN 771-4:2015, AAC 4 h_{nom} = 35 mm	0,10	< 0,1
Autoclaved aerated concrete blocks EN 771-4:2015, AAC 4, h_{nom} = 55 mm	0,20	< 0,1

fischer TermoZ CS 8 and fischer TermoZ CS II 8	**Annex C6** of European Technical Assessment ETA-14/0372
Plate stiffness and displacements	

Table C7.1: Displacements of the TermoZ CS II 8 / 135 - 255

Base material	Tension load N_{Rd} [kN]	Displace-ments $\Delta(\delta_N)$ [mm]
Concrete ≥ C12/15 (EN 206-1:2001) ≤ C50/60	0,5	< 0,3
Weather resistant concrete shell ≥ C20/C25 (EN 206-1:2001)	0,5	< 0,3
Clay brick e.g. acc. to EN 771-1:2015, Mz 20	0,5	< 0,5
Calcium silicate solid bricks e.g. acc. to EN 771-2 :2015, KS 20	0,5	< 0,3
Calcium silicate solid bricks e.g. acc. to EN 771-2 :2015, KS 12	0,5	
Solid lightweight concrete block e.g. acc. to EN 771-3 :2015, Vbl 8	0,43	< 0,4
Solid concrete block e.g. acc. to EN 771-3:2015, Vbn 20	0,5	< 0,3
Solid concrete block e.g. acc. to EN 771-3:2015, Vbn 12	0,5	
Vertically perforated clay brick e.g. acc. to EN 771-1:2015, Hlz 12 rotary drilling	0,33	< 0,5
Vertically perforated clay brick e.g. acc. to EN 771-1:2015, Hlz 12 hammer drilling	0,22	< 0,3
Vertically perforated clay brick e.g. acc. to EN 771-1:2015, Hlz 48 rotary drilling	0,5	< 0,4
Vertically perforated clay brick e.g. acc. to EN 771-1:2015, Hlz 48 hammer drilling	0,5	
Hollow calcium silicate brick e.g. acc. to EN 771-2:2015, KSL 12	0,5	< 0,4
Hollow brick lightweight concrete e.g. acc. to EN 771-3:2015, Hbl 4	0,17	< 0,2
Hollow brick concrete e.g. acc. to EN 771-3:2015, Hbn 10	0,5	< 0,4
Hollow brick concrete e.g. acc. to EN 771-3:2015, Hbn 8	0,5	< 0,4
Hollow brick concrete e.g. acc. to EN 771-3:2015, Hbn 6	0,37	< 0,3
Hollow brick concrete e.g. acc. to EN 771-3:2015, Hbn 4	0,25	< 0,2
Lightweight Aggregate Concrete ≥ LAC 6 EN 1520	0,5	< 0,5
Lightweight Aggregate Concrete ≥ LAC 4 EN 1520	0,32	< 0,5
Autoclaved aerated concrete blocks e.g. acc. to EN 771-4:2015, AAC 4, h_{nom} = 32,5 mm	0,22	< 0,2
Autoclaved aerated concrete blocks e.g. acc. to EN 771-4:2015, AAC 4, h_{nom} = 52,5 mm	0,37	