PROHLÁŠENÍ O VLASTNOSTECH

DoP 0378

pro pro vstřikovací systém fischer FIS EP (Kovové kotvy do betonu) CS

1. Jedinečný identifikační kód typu výrobku: **DoP 0378**

2. Zamýšlené/zamýšlená použití: **Dodatečné upevnění v tažené a tlačené zóně betonu, viz. dodatek, obzvláště Přílohy B1 - B10.**

3. Výrobce: **fischerwerke GmbH & Co. KG, Otto-Hahn-Straße 15, 79211 Denzlingen, Německo**

4. Zplnomocněný zástupce: **–**

5. Systém/systémy POSV: **1**

6. Evropský dokument pro posuzování: **EAD 330499-02-0601, Edition 09/2022**
   Evropské technické posouzení: **ETA-24/0960; 2024-12-13**
   Subjekt pro technické posuzování: **CSTB - Centre Scientifique et Technique du Bâtiment**
   Oznámený subjekt/oznámené subjekty: **2873 TU Darmstadt**

7. Deklarovaná vlastnost/Deklarované vlastnosti:

Mechanická odolnost a stabilita (BWR 1)

Charakteristická únosnost v tahu (pro statickou a kvazistatickou akci):

1) Odolnost proti selhání oceli: viz. dodatek, obzvláště Přílohy C1, C2
2) Odolnost proti kombinovanému porušení vytažením a selháním betonu: viz. dodatek, obzvláště Přílohy C3, C4
3) Odolnost proti selhání betonu: viz. dodatek, obzvláště Příloha C3
4) Okrajová vzdálenost bránící rozštěpení při zatížení: viz. dodatek, obzvláště Příloha C3
5) Pevnost: viz. dodatek, obzvláště Přílohy C3, C4
6) Maximální utahovací moment při instalaci: viz. dodatek, obzvláště Příloha B3
7) Minimální vzdálenost od okraje a rozteč, Tloušťka podkladu: viz. dodatek, obzvláště Přílohy B5, B6

Charakteristická únosnost ve smyku (pro statickou a kvazistatickou akci):

8) Odolnost proti selhání oceli: viz. dodatek, obzvláště Příloha C2
9) Odolnost proti selhání rozštěpením: viz. dodatek, obzvláště Příloha C3
10) Odolnost proti selhání okraje betonu: viz. dodatek, obzvláště Příloha C3

posuny při krátkodobém a dlouhodobém zatížení:

11) Posuny při krátkodobém a dlouhodobém zatížení: viz. dodatek, obzvláště Příloha C5
12) Odolnost betonu vyztuženého ocelovými vlákny: NPD

Charakteristická únosnost a posuny pro seismické kategorie C1 a C2:

13) Odolnost proti tahovému zatížení, kategorie C1: NPD
14) Odolnost proti tahovému zatížení, kategorie C2: NPD
15) Odolnost proti smykovému zatížení, kategorie C1: NPD
16) Odolnost proti smykovému zatížení, kategorie C2: NPD

Bezpečnost v případě požáru (BWR 2)

17) Odolnost proti ohni: Třídy (A1)

Odolnost proti požáru:

18) Požární odolnost proti selhání oceli (tahové zatížení): NPD
19) Odolnost spoje v podmínkách požáru: NPD
20) Požární odolnost proti selhání oceli (smykové zatížení): NPD

Hygiena, zdraví a životní prostředí (BWR 3)

21) Obsah, emise a / nebo uvolňování nebezpečných látek: NPD

8. Příslušná technická dokumentace a/nebo specifická technická dokumentace: **–**

Vlastnosti výše uvedeného výrobku jsou ve shodě se souborem deklarovaných vlastností. Toto prohlášení o vlastnostech se v souladu s nařízením (EU) č. 305/2011 vydává na výhradní odpovědnost výrobce uvedeného výše.

Podepsáno za výrobce a jeho jménem:

Dr. Ronald Mihala, Vedoucí oddělení vývoje a řízení výroby

Dieter Pfaff, Vedoucí Mezinárodní produkční federace a řízení kvality

Tumlingen, 2025-02-10

Toto PoV bylo připraveno v různých jazykových mutacích. V případě rozporu vždy rozhoduje interpretace verze v anglickém jazyce.

Příloha obsahuje nepovinné a doplňkové informace v anglickém jazyce nad rámec zákonných požadavků.

Translation guidance Essential Characteristics and Performance Parameters for Annexes

Pokyny pro překlad Základní charakteristiky a výkonnostní parametry příloh

Mechanical resistance and stability (BWR 1) **Mechanická odolnost a stabilita (BWR 1)**		
Characteristic resistance to tension load (static and quasi-static loading): **Charakteristická únosnost v tahu (pro statickou a kvazistatickou akci):**		
1	Resistance to steel failure: **Odolnost proti selhání oceli:**	$N_{Rk,s}$ [kN]
2	Resistance to combined pull- out and concrete cone failure: **Odolnost proti kombinovanému porušení vytažením a selháním betonu:**	τ_{Rk} and/or $\tau_{Rk,100}$ [N/mm^2], ψ_c, ψ^0_{sus},$\psi_{sus,100}$ [-] (BF)
	Resistance to pull-out failure: **Odolnost proti selhání vytažením:**	$N_{Rk,p}$ and/or $N_{Rk,p,100}$ [kN], ψ_c [-] (BEF)
3	Resistance to concrete cone failure: **Odolnost proti selhání betonu:**	$c_{cr,N}$ [mm], $k_{cr,N}$, $k_{ucr,N}$ [-]
4	Edge distance to prevent splitting under load: **Okrajová vzdálenost bránící rozštěpení při zatížení:**	$c_{cr,sp}$ [mm]
5	Robustness: **Pevnost:**	γ_{inst} [-]
6	Maximum installation torque: **Maximální utahovací moment při instalaci:**	max T_{inst} [Nm] (BF)
	Installation torque: **Utahovací moment při instalaci:**	T_{inst} [Nm] (BEF)
7	Minimum edge distance,spacing and member thickness: **Minimální vzdálenost od okraje a rozteč, Tloušťka podkladu:**	c_{min}, s_{min}, h_{min} [mm]
Characteristic resistance to shear load (static and quasi-static loading): **Charakteristická únosnost ve smyku (pro statickou a kvazistatickou akci):**		
8	Resistance to steel failure: **Odolnost proti selhání oceli:**	$V^0_{Rk,s}$ [kN], $M^0_{Rk,s}$ [Nm], k_7 [-]
9	Resistance to pry-out failure: **Odolnost proti selhání rozštěpením:**	k_8 [-]
10	Resistance to concrete edge failure: **Odolnost proti selhání okraje betonu:**	d_{nom}, l_f [mm]
Displacements under short-term and long-term loading: **posuny při krátkodobém a dlouhodobém zatížení:**		
11	Displacements factors under short-term and long-term loading: **Posuny při krátkodobém a dlouhodobém zatížení:**	δ_0, δ_∞ [mm/(N/mm^2)] or [mm/kN]
12	Resistance in steel fibre reinforced concrete: **Odolnost betonu vyztuženého ocelovými vlákny:**	Description
Characteristic resistance and displacements for seismic performance categories C1 and C2: **Charakteristická únosnost a posuny pro seismické kategorie C1 a C2:**		
13	Resistance to tension for seismic performance category C1 **Odolnost proti tahovému zatížení, kategorie C1:**	$N_{Rk,s,C1}$ [kN] (all) $\tau_{Rk,C1}$ [N/mm^2] (BF) $N_{Rk,p,C1}$ [kN] (BEF)
14	Resistance to tension and displacements for seismic performance category C2 **Odolnost proti tahovému zatížení, kategorie C2:**	$N_{Rk,s,C2}$ [kN] (all) $\tau_{Rk,C2}$ [N/mm^2] (BF) $N_{Rk,p,C2}$ [kN] (BEF) $\delta_{N,C2(50\%)}$, $\delta_{N,C2(100\%)}$ [mm] (all)
15	Resistance to shear for seismic performance category C1 **Odolnost proti smykovému zatížení, kategorie C1:**	$V_{Rk,s,C1}$ [kN] (all)
16	Resistance to shear load and displacements for seismic performance category C2 **Odolnost proti smykovému zatížení, kategorie C2:**	$V_{Rk,s,C2}$ [kN] (all) $\delta_{V,C2(50\%)}$, $\delta_{V,C2(100\%)}$ [mm] (all)
Safety in case of fire (BWR 2) **Bezpečnost v případě požáru (BWR 2)**		
17	Reaction to fire **Odolnost proti ohni:**	Class Třídy (A1)
Resistance to fire **Odolnost proti požáru:**		
18	Fire resistance to steel failure (tension load): **Požární odolnost proti selhání oceli (tahové zatížení):**	$N_{Rk,s,fi}$ [kN]
19	Bond resistance under fire conditions: **Odolnost spoje v podmínkách požáru:**	$k_{fi,p}$ (θ) [-], $\tau_{Rk,fi}$ (θ) [N/mm^2] (BF)
20	Fire resistance to steel failure under shear loading: **Požární odolnost proti selhání oceli (smykové zatížení):**	$V_{Rk,s,fi}$ [kN], $M^0_{Rk,s,fi}$ [Nm]
Hygiene, health and the environment (BWR 3) **Hygiena, zdraví a životní prostředí (BWR 3)**		
21	Content, emission and/or release of dangerous substances: **Obsah, emise a / nebo uvolňování nebezpečných látek:**	Description/Level

Centre Scientifique et Technique du Bâtiment

84 avenue Jean Jaurès
CHAMPS-SUR-MARNE
F-77447 Marne-la-Vallée Cedex 2
Tél. : (33) 01 64 68 82 82
Fax : (33) 01 60 05 70 37

Designated according to Article 29 of Regulation (EU) No 305/2011

Member of EOTA

www.eota.eu

European Technical Assessment

ETA-24/0960 of 13/12/2024

English translation prepared by CSTB - Original version in French language

General Part

Technical Assessment Body issuing the European Technical Assessment:	
Centre Scientifique et Technique du Bâtiment (CSTB)	
Trade name:	fischer injection system FIS EP
Product family:	Bonded fasteners for use in concrete
Manufacturer:	fischerwerke GmbH & Co. KG Otto-Hahn-Straße 15 79211 Denzlingen Germany
Manufacturing plants:	fischerwerke
This European Technical Assessment contains:	22 pages including 18 pages of annexes which form an integral part of this assessment
This European Technical Assessment is issued in accordance with Regulation (EU) No 305/2011, on the basis of:	EAD 330499-02-0601 Edition 09/2022
This Assessment replaces:	-

The European Technical Assessment is issued by the Technical Assessment Body in its official language. Translations of this European Technical Assessment in other languages shall fully correspond to the original issued document and shall be identified as such. Communication of this European Technical Assessment, including transmission by electronic means, shall be in full. However, partial reproduction may only be made with the written consent of the issuing Technical Assessment Body. Any partial reproduction shall be identified as such. This European Technical Assessment may be withdrawn by the issuing Technical Assessment Body, in particular pursuant to information by the Commission in accordance with Article 25(3) of Regulation (EU) No 305/2011.

Specific Part

1 Technical description of the product

The fischer injection system FIS EP is a bonded fastener consisting of a cartridge with injection mortar and a steel element.

These steel elements are:

- a reinforcing bar (Rebar) in the range ϕ10 to ϕ20.
- a fischer Anchor rod FIS A / RG M in the range of M10 to M20.
- a commercial Threaded rod in the range of M10 to M20.

The steel element is placed into a drilled hole filled with injection mortar and is anchored via the bond between steel element, injection mortar and concrete.

The illustration and the description of the product are given in Annexes A.

2 Specification of the intended use

The performances given in Section 3 are only valid if the fastener is used in compliance with the specifications and conditions given in Annexes B.

The provisions made in this European technical assessment are based on an assumed working life of the fastener of 50 years. The indications given on the working life cannot be interpreted as a guarantee given by the producer but are to be regarded only as a means for choosing the right products in relation to the expected economically reasonable working life of the works.

3 Performance of the product

3.1 Mechanical resistance and stability (BWR 1)

Essential characteristic	Performance
Characteristic resistance for static and quasi static loads, Displacements	See Annexes C1 to C5

3.2 Safety in case of fire (BWR 2)

Essential characteristic	Performance
Reaction to fire	Fasteners satisfy requirements for Class A1
Resistance to fire	-

3.3 Hygiene, health and the environment (BWR 3)

Regarding dangerous substances contained in this European technical approval, there may be requirements applicable to the products falling within its scope (e.g., transposed European legislation and national laws, regulations and administrative provisions). In order to meet the provisions of the Construction Products Directive, these requirements need also to be complied with, when and where they apply.

3.4 Safety in use (BWR 4)

For Basic requirement Safety in use the same criteria are valid as for Basic Requirement Mechanical resistance and stability.

3.5 Protection against noise (BWR 5)

Not relevant.

3.6 Energy economy and heat retention (BWR 6)

Not relevant.

3.7 Sustainable use of natural resources (BWR 7)

For the sustainable use of natural resources, no performance was determined for this product.

3.8 General aspects relating to fitness for use

Durability and Serviceability are only ensured if the specifications of intended use according to Annex B1 are kept.

4 Assessment and verification of constancy of performance (AVCP)

According to the Decision 96/582/EC of the European Commission[1], as amended, the system of assessment and verification of constancy of performance (see Annex V to Regulation (EU) No 305/2011) given in the following table apply.

Product	Intended use	Level or class	System
Bonded fasteners for use in concrete	For fixing and/or supporting to concrete, structural elements (which contributes to the stability of the works) or heavy units	-	1

5 Technical details necessary for the implementation of the AVCP system, as planned in the relevant EAD

Technical details necessary for the implementation of the Assessment and verification of constancy of performance (AVCP) system are laid down in the control plan deposited at Centre Scientifique et Technique du Bâtiment.

The control plan including confidential information is not included in the published part of this ETA.

The original French version is signed by:

Loïc Payet

Head of the Structure, Masonry, Partition Division

1 Official Journal of the European Communities L 254 of 08.10.1996.

Installed condition

fischer Anchor rod FIS A / RG M (Anchor rod) and commercial standard Threaded rod (Threaded rod)

Pre-positioned installation

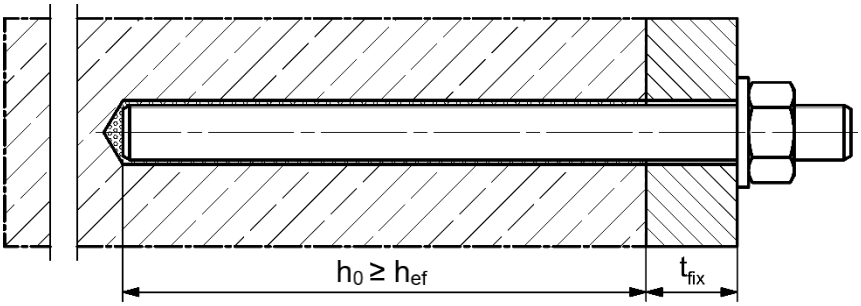

Push through installation (annular gap filled with mortar)

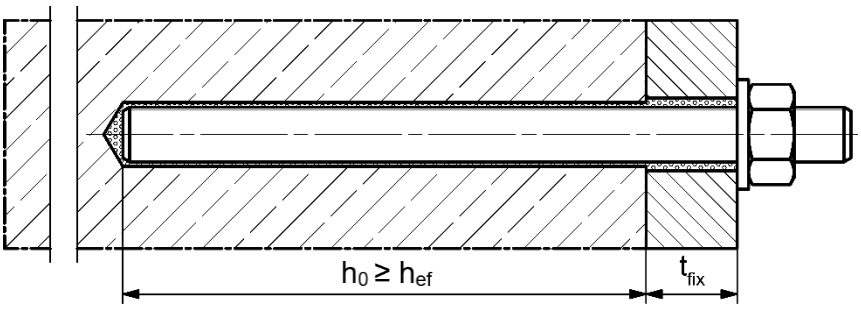

Reinforcing bar (Rebar)

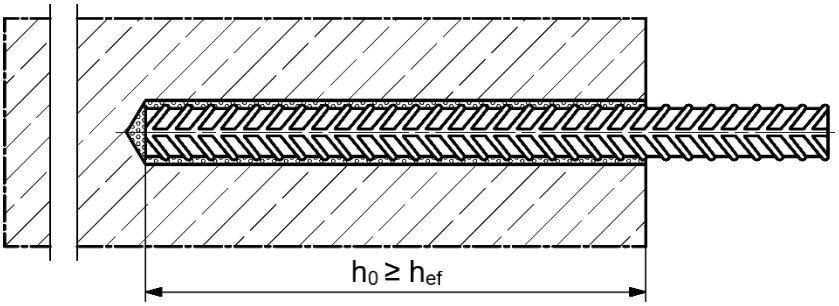

Figures not to scale

h_0 = drill hole depth

h_{ef} = effective embedment depth

t_{fix} = thickness of fixture

fischer Injection System FIS EP

Product description
Installation conditions

Annex A1

Product description: Overview system components part 1

Injection cartridge (shuttle cartridge) with sealing cap; Size: 390 ml, 585 ml

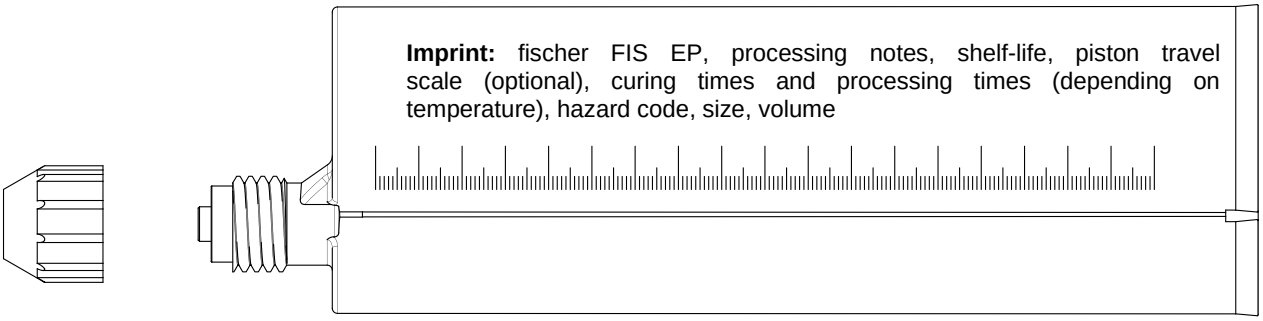

Injection cartridge (coaxial cartridge) with sealing cap; Sizes: 300 ml

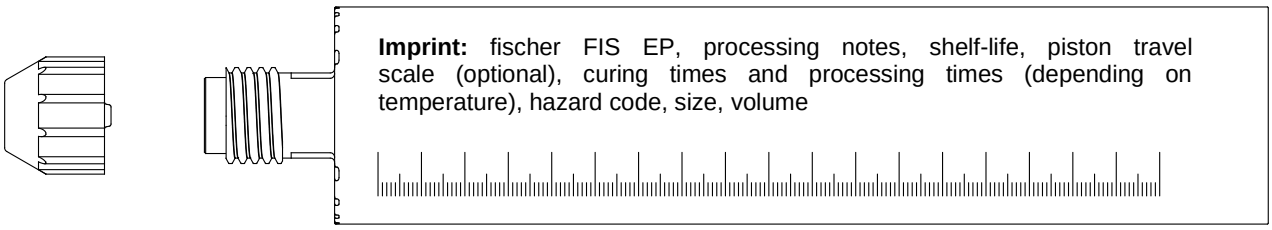

Static mixer FIS MR Plus for Injection cartridge 300ml, 390 ml

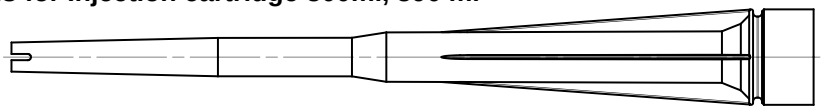

Static mixer FIS UMR for Injection cartridges 585 ml

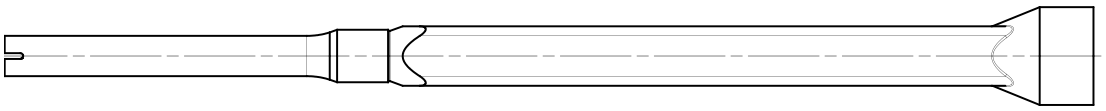

Injection adapter and extension tube Ø 9 for static mixer FIS MR Plus;
Injection adapter and extension tube Ø 9 or Ø 15 for static mixer FIS UMR

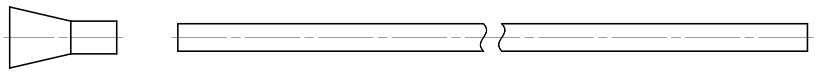

Cleaning brush BS

Blow-out pump AB G

Compressed-air cleaning tool ABP

Figures not to scale

fischer Injection System FIS EP

Product description
Overview system components part 1; cartdriges / static mixer / accessories

Annex A2

Product description: Overview system components part 2

Anchor rod / Threaded rod

Size: M10, M12, M16, M20

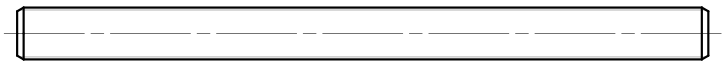

Washer / hexagon nut

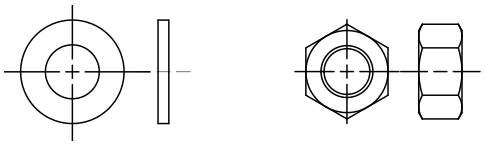

Reinforcing bar

Nominal diameter: ϕ10, ϕ12, ϕ14, ϕ16, ϕ20

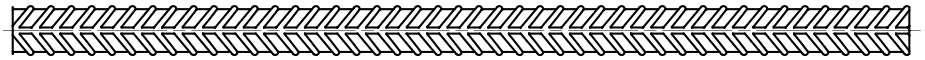

Figures not to scale

fischer Injection System FIS EP

Product description
Overview system components part 2; steel components

Annex A3

Table A4.1: Product description: Materials

Part	Designation	Material		
1	Injection cartridge	Mortar, hardener, filler		
	Steel grade	Steel	Stainless steel R	High corrosion resistant steel HCR
		zinc plated (zp, hdg)	acc. to EN 10088-1:2023 Corrosion resistance class CRC III acc. to EN 1993-1-4:2006+A2:2020	acc. to EN 10088-1:2023 Corrosion resistance class CRC V acc. to EN 1993-1-4:2006+A2:2020
2	Anchor rod or Threaded rod	Property class 4.8, 5.8 or 8.8 acc. to EN ISO 898-1:2013 zinc plated ≥ 5 µm, acc. to EN ISO 4042:2022 or hot dip galvanised ≥ 40 µm acc. to EN ISO 10684:2004+AC:2009 f_{uk} ≤ 1000 N/mm² A_5 > 8 % fracture elongation	Property class 50, 70 or 80 acc. to EN ISO 3506-1:2020 1.4401; 1.4404; 1.4578; 1.4571; 1.4439; 1.4362; 1.4062, 1.4662, 1.4462; acc. to EN 10088-1:2023 f_{uk} ≤ 1000 N/mm² A_5 > 8 % fracture elongation	Property class 50 or 80 acc. to EN ISO 3506-1:2020 or property class 70 1.4565; 1.4529; acc. to EN 10088-1:2023 f_{uk} ≤ 1000 N/mm² A_5 > 8 % fracture elongation
3	Washer ISO 7089:2000	zinc plated ≥ 5 µm, acc. to EN ISO 4042:2022 or hot dip galvanised ≥ 40 µm acc. to EN ISO 10684:2004+AC:2009	1.4401; 1.4404; 1.4578;1.4571; 1.4439; 1.4362; acc. to EN 10088-1:2023	1.4565; 1.4529; acc. to EN 10088-1:2023
4	Hexagon nut	Property class 5 or 8 acc. to EN ISO 898-2:2012 zinc plated ≥ 5 µm, acc. to EN ISO 4042:2022 or hot dip galvanised ≥ 40 µm acc. to EN ISO 10684:2004+AC:2009	Property class 50, 70 or 80 acc. acc. to EN ISO 3506-2:2020 1.4401; 1.4404; 1.4578; 1.4571; 1.4439; 1.4362; acc. to EN 10088-1:2023	Property class 50, 70 or 80 acc. acc. to EN ISO 3506-2:2020 1.4565; 1.4529 acc. to EN 10088-1:2023
6	Rebar	EN 1992-1-1:2004 and AC:2010, Annex C Bars and de-coiled rods, class B or C with f_{yk} and k according to NDP or NCI according to EN 1992-1-1/NA; $f_{uk} = f_{tk} = k \cdot f_{yk}$ (A_5 > 8 %)		

Specifications of intended use part 1

Table B1.1: Overview use and performance categories

Anchorages subject to		**FIS EP with …**			
		Anchor rod / Threaded rod 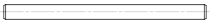		Reinforcing bar	
Hammer drilling with standard drill bit		all sizes			
Static and quasi-static loading, in	uncracked concrete	all sizes	Tables: C1.1 C3.1 C4.1 C4.2	all sizes	Tables: C2.1 C3.1 C4.1 C4.2
Use category	I1 dry or wet concrete	all sizes			
Installation direction		D3 (downward and horizontal and upwards (e.g. overhead))			
Installation temperature		$T_{i,min}$ = +5 °C to $T_{i,max}$ = +40 °C			
Service temperature	Temperature range I	-40 °C to +60 °C	(max. short term temperature +60 °C; max. long term temperature +43 °C)		

Specifications of intended use part 2

Fasteners subject to:

- Static and quasi static loading.

Base material:

- Compacted reinforced or unreinforced normal weight concrete without fibres according to EN 206:2013+A2:2021.
- Strength classes C20/25 to C50/60 according to EN 206:2013+A2:2021.
- uncracked concrete.

Use conditions (Environmental conditions):

- Structures subject to dry internal conditions (all materials).
- For all other conditions according EN 1993-1-4:2006+A2:2020 corresponding to corrosion resistance classes Annex A (stainless steel and high corrosion resistant steel).

Design:

- Fasteners are designed under the responsibility of an engineer experienced in fasteners and concrete work.
- Verifiable calculation notes and drawings are prepared taking account of the loads to be anchored. The position of the fastener is indicated on the design drawings (e. g. position of the fastener relative to reinforcement or to supports, etc.).
- The fasteners are designed in accordance with EN 1992-4:2018 and EOTA Technical Report 055:2018.

Installation:

- Fastener installation is to be carried out by appropriately qualified personnel and under the supervision of the person responsible for technical matters of the site.
- Fastening depth should be marked and adhered to installation.

Table B3.1: Installation parameters for Anchor rod / Threaded rods

Anchor rods / Threaded rods				M10	M12	M16	M20
Nominal drill hole diameter		d_0	[mm]	12	14	18	24
Drill hole depth		h_0	[mm]	$h_0 \geq h_{ef}$			
Effective embedment depth		$h_{ef,\,min}$	[mm]	60	70	80	90
		$h_{ef,\,max}$	[mm]	200	240	320	400
Simplified spacing and edge distance [1)]		s = c	[mm]	45	55	65	85
Diameter of the clearance hole of the fixture	pre-positioned installation	d_f	[mm]	12	14	18	22
	push through installation	d_f	[mm]	14	16	20	26
Minimum thickness of concrete member		h_{min}	[mm]	$h_{ef} + 30$		$h_{ef} + 2d_0$	
Maximum installation torque		max T_{inst}	[Nm]	20	40	60	120

[1)] Detailed calculation according to Annex B5 and B6.

Anchor rod / Threaded rod

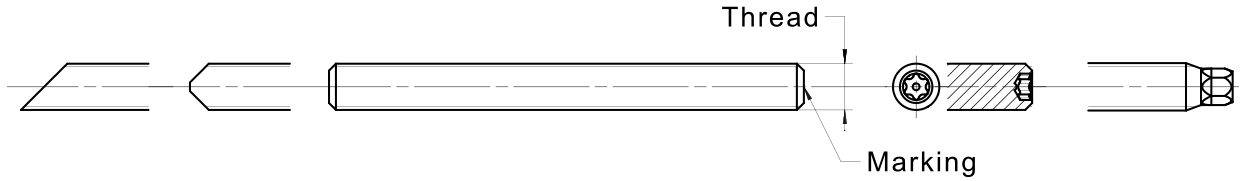

Marking (on random place) anchor rod:

Steel electroplated PC[1)] 8.8	● or +	Steel hot-dip PC[1)] 8.8	●
High corrosion resistant steel HCR PC[1)] 50	●	High corrosion resistant steel HCR PC[1)] 70	-
High corrosion resistant steel HCR PC[1)] 80	(	Stainless steel R property class 50	~
Stainless steel R property class 80	∗		

Alternatively: Colour coding according to DIN 976-1: 2016

[1)] PC = property class

Installation conditions:

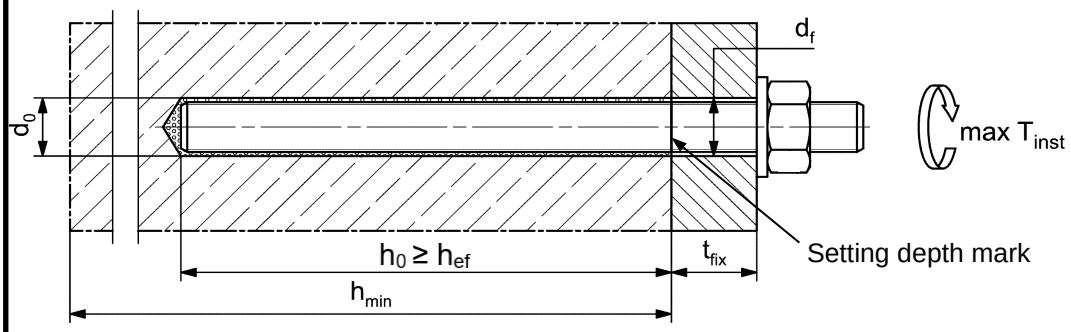

Threaded rods, washers and hexagon nuts may also be used if the following requirements are fulfilled.

- Material dimensions and mechanical properties according to Annex A 4, Table A4.1
- Inspection certificate 3.1 according to EN 10204:2004, the documents shall be stored
- Setting depth is marked

Figures not to scale

fischer Injection System FIS EP

Intended use
parameters anchor rods

Annex B3

Table B4.1: Installation parameters for Reinforcing bar

Nominal diameter of the rebar		ϕ	10[1)]		12[1)]		14	16	20
Nominal drill hole diameter	d_0	[mm]	12	14	14	16	18	20	25
Drill hole depth	h_0		$h_0 \geq h_{ef}$						
Effective embedment depth	$h_{ef,min}$		60		70		75	80	90
	$h_{ef,max}$		200		240		280	320	400
Simplified spacing and edge distance [2)]	s = c		45		55		60	65	85
Minimum thickness of concrete member	h_{min}		h_{ef} + 30			$h_{ef} + 2d_0$			

[1)] Both drill hole diameters can be used
[2)] Detailed calculation according to Annex B5 and B6

Reinforcing bar

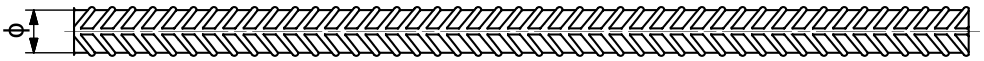

- The minimum value of related rib area $f_{R,min}$ must fulfil the requirements of EN 1992-1-1:2004+AC:2010
- The rib height must be within the range: $0{,}05 \cdot \phi \leq h_{rib} \leq 0{,}07 \cdot \phi$
  (ϕ = Nominal diameter of the rebar, h_{rib} = rib height)

Installation conditions:

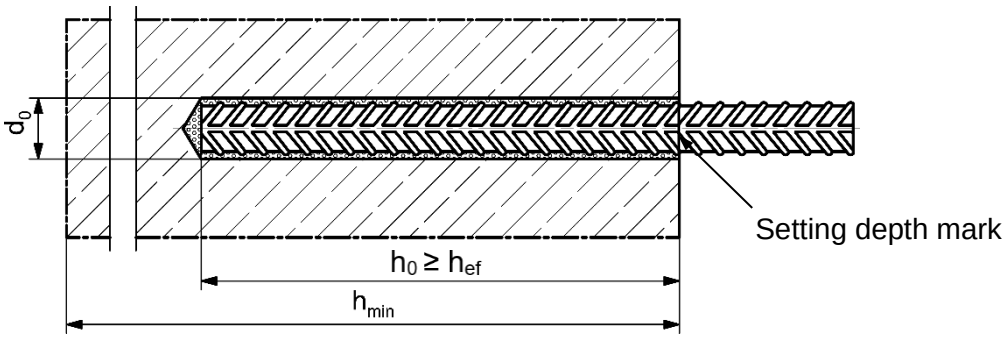

Figures not to scale

fischer Injection System FIS EP

Intended use
parameters rebars

Annex B4

Table B5.1: Minimum spacing and minimum edge distance for Anchor rods / Threaded rods and Rebars

Anchor rods / Threaded rods			**M10**	**M12**	**-**	**M16**	**M20**
Rebars (nominal diameter)		**ϕ**	**10**	**12**	**14**	**16**	**20**
Minimum edge distance							
Uncracked concrete	c_{min}	[mm]	45	45	45	50	55
Spacing	s		according to Annex B6				
Minimum spacing							
Uncracked concrete	s_{min}	[mm]	45	55	60	65	85
Edge distance	c		according to Annex B6				
Required projecting area							
Uncracked concrete	$A_{sp,req}$	[1000 mm²]	13,0	22,0	23,0	24,0	38,5

Splitting failure for minimum edge distance and spacing in dependence of the effective embedment depth h_{ef}.

For the calculation of minimum spacing and minimum edge distance of anchors in combination with different embedment depths and thicknesses of concrete members the following equation shall be fulfilled:

$$\mathbf{A_{sp,req} < A_{sp,t}}$$

$A_{sp,req}$ = required projecting area
$A_{sp,t}$ = projecting area (according to Annex B6)

Table B6.1: Projecting area A_{sp} with concrete member thickness $h > h_{ef} + 1{,}5 \cdot c$ and $h \geq h_{min}$

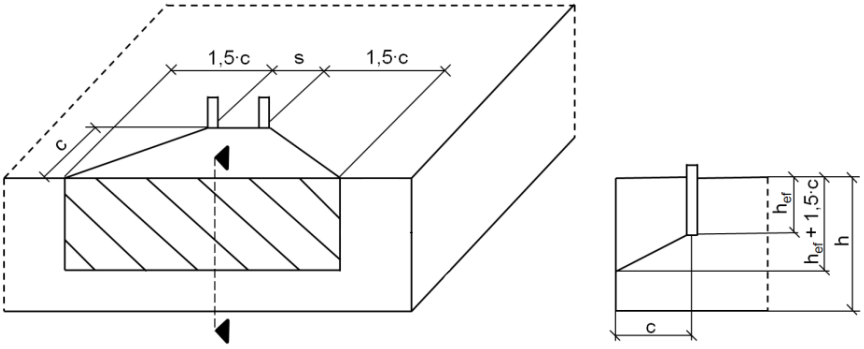

Single fastener	$A_{sp,t} = (3 \cdot c) \cdot (h_{ef} + 1{,}5 \cdot c)$	[mm²]	with $c \geq c_{min}$
Group of fastener with $s > 3 \cdot c$	$A_{sp,t} = (6 \cdot c) \cdot (h_{ef} + 1{,}5 \cdot c)$	[mm²]	
Group of fastener with $s \leq 3 \cdot c$	$A_{sp,t} = (3 \cdot c + s) \cdot (h_{ef} + 1{,}5 \cdot c)$	[mm²]	with $c \geq c_{min}$ and $s \geq s_{min}$

Table B6.2: Projecting area A_{sp} with concrete member thickness $h \leq h_{ef} + 1{,}5 \cdot c$ and $h \geq h_{min}$

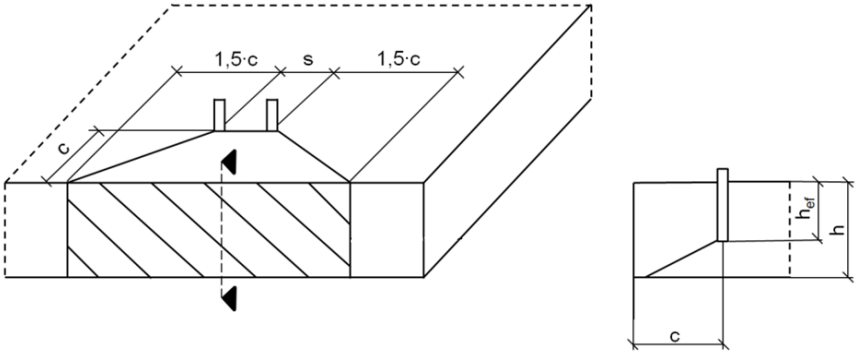

Single fastener	$A_{sp,t} = 3 \cdot c \cdot$ existing h	[mm²]	with $c \geq c_{min}$
Group of fastener with $s > 3 \cdot c$	$A_{sp,t} = 6 \cdot c \cdot$ existing h	[mm²]	
Group of fastener with $s \leq 3 \cdot c$	$A_{sp,t} = (3 \cdot c + s) \cdot$ existing h	[mm²]	with $c \geq c_{min}$ and $s \geq s_{min}$

Edge distance and axial spacing shall be rounded up to at least 5 mm.

Figures not to Scale

Table B7.1: Parameters of the cleaning brush BS (steel brush with steel bristles)

The size of the cleaning brush refers to the drill hole diameter

Nominal drill hole diameter	d_0	[mm]	12	14	16	18	20	24	25
Steel brush diameter BS	d_b		14	16	20		25	26	27

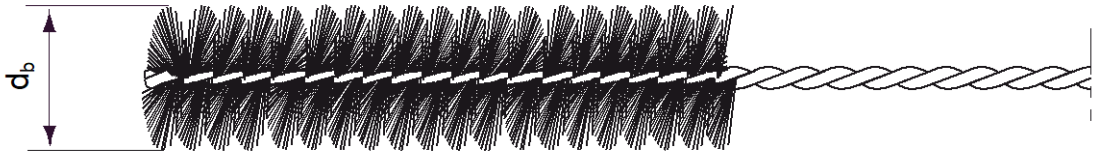

Table B7.2: Conditions for use static mixer without an extension tube

Nominal drill hole diameter	d_0	[mm]	12	14	16	18	20	24	25
Drill hole depth h_0 by using	FIS MR Plus		≤ 90	≤ 120	≤ 140	≤ 150	≤ 160	≤ 190	≤ 210
	FIS UMR		-	≤ 90	≤ 160	≤ 180	≤ 190	≤ 220	

Table B7.3: Maximum processing time of the mortar and minimum curing time (During the curing time of the mortar the concrete temperature may not fall below the listed minimum temperature)

Temperature at anchoring base [°C]	Maximum processing time t_{work}	Minimum curing time t_{cure}
> 5 to 10	180 min	96 h
> 10 to 15	90 min	60 h
> 15 to 20	60 min	36 h
> 20 to 30	30 min	24 h
> 30 to 40	15 min	12 h

Installation instructions part 1

Drilling and cleaning the hole (hammer drilling with standard drill bit)

1	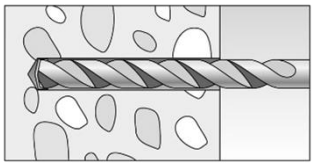	Drill the hole. Nominal drill hole diameter $\mathbf{d_0}$ and drill hole depth $\mathbf{h_0}$ see **Tables B3.1, B4.1.**		
2	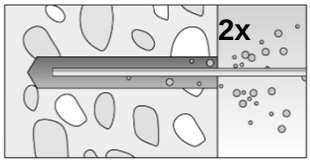	Clean the drill hole: For h_{ef} ≤ 12d and d_0 < 18 mm blow out the hole twice by hand.	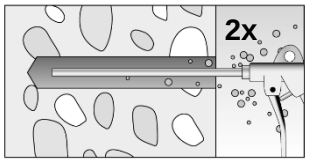	For h_{ef} > 12d and / or d_0 ≥ 18 mm blow out the hole twice with oil-free compressed air (p ≥ 6 bar).
3	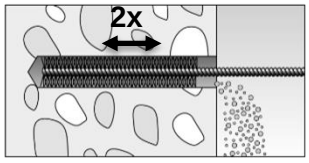	Brush the drill hole twice. For drill hole diameter d_0 ≥ 18 mm and / or h_{ef} > 12d use a power drill. For deep holes use an extension. Corresponding brushes see **Table B7.1.**		
4	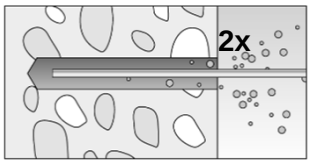	Clean the drill hole: For h_{ef} ≤ 12d and d_0 < 18 mm blow out the hole twice by hand.	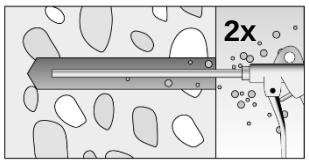	For h_{ef} > 12d and / or d_0 ≥ 18 mm blow out the hole twice with oil-free compressed air (p ≥ 6 bar).

Preparing

5	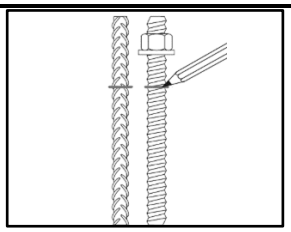	Mark the setting depth of the steel element. Only use clean and oil-free anchor elements.	
6	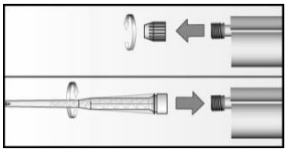	Remove the sealing cap. Screw on the static mixer (the spiral in the static mixer must be clearly visible).	
7	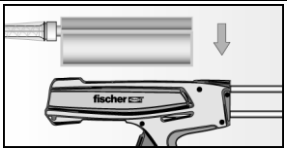	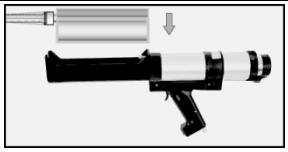	Place the cartridge into the dispenser.
8	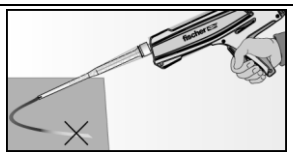	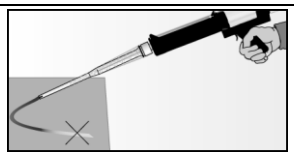	Extrude approximately 10 cm of material out until the resin is evenly grey in colour. Do not use mortar that is not uniformly grey.

Go to Step 9

Installation instructions part 2

Injection of the mortar

9	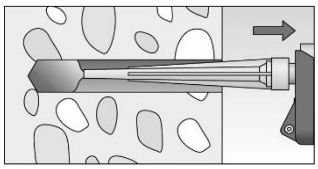 Fill approximately 2/3 of the drill hole with mortar. Always begin from the bottom of the hole and avoid bubbles.	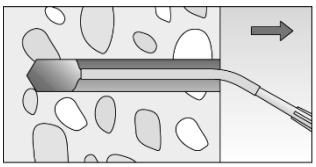 The conditions for mortar injection without extension tube can be found in **Table B7.2**. For deeper drill holes, than those mentioned in **Table B7.2,** use a suitable extension tube.	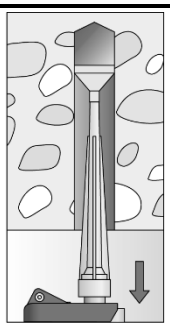 For overhead installation, deep holes (h_0 > 250 mm) or drill hole diameter (d_0 ≥ 30 mm) use an injection-adapter.

Installation of Anchor rods / Threaded rods

10	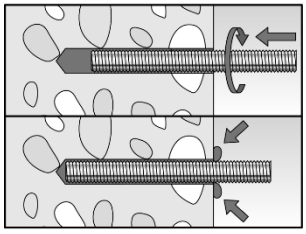	Only use clean and oil-free anchor elements. Push the anchor rod with the setting depth mark down to the bottom of the hole, turning it slightly while doing so. After inserting the anchor element, excess mortar must be emerged around the anchor element.		
	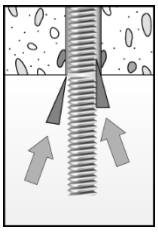	For overhead installations support the metal part with wedges (e. g. fischer centering wedges) or fischer overhead clips.	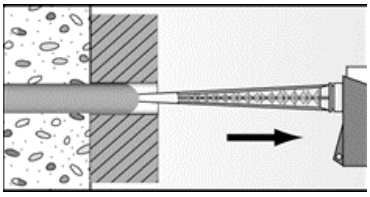	For push through installation fill the annular gap with mortar.
11		Wait for the specified curing time t_{cure} see **Table B7.3**.	**12**	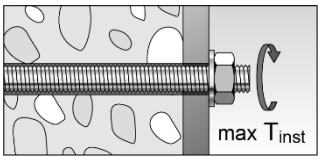 Mounting the fixture max T_{inst} see **Table B3.1.**

Installation instructions part 3

Installation Rebars

10	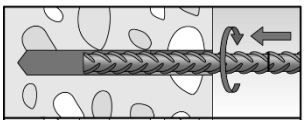	Only use clean and oil-free rebars. Push the rebar with the setting depth mark into the filled hole up to the setting depth mark. Recommendation: Rotation back and forth of the rebar makes pushing easy.
	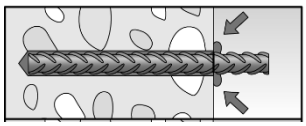	When the setting depth mark is reached, excess mortar must be emerged from the mouth of the drill hole.
11		Wait for the specified curing time t_{cure} see **Table B7.3**.

Table C1.1: Characteristic resistance to steel failure under tension and shear loading of Anchor rods / Threaded rods

Anchor rod / Threaded rod				M10	M12	M16	M20
Characteristic resistance to steel failure under tension loading [1)]							
Characteristic resistance $N_{Rk,s}$	Steel zinc plated	Property class 4.8	[kN]	23,2 (21,4)	33,7	62,8	98,0
		5.8		29,0 (26,8)	42,1	78,5	122,5
		8.8		46,4 (42,8)	67,4	125,6	196,0
	Stainless steel R and high corrosion resistant steel HCR	50		29,0	42,1	78,5	122,5
		70		40,6	59,0	109,9	171,5
		80		46,4	67,4	125,6	196,0
Partial factors [2)]							
Partial factor γ_{Ms}	Steel zinc plated	Property class 4.8	[-]	1,50			
		5.8		1,50			
		8.8		1,50			
	Stainless steel R and high corrosion resistant steel HCR	50		2,86			
		70		1,87 / fischer HCR: 1,50			
		80		1,60			
Characteristic resistance to steel failure under shear loading [1)]							
without lever arm							
Characteristic resistance $V^0_{Rk,s}$	Steel zinc plated	Property class 4.8	[kN]	13,9 (12,8)	20,2	37,6	58,8
		5.8		17,4 (16,0)	25,2	47,1	73,5
		8.8		23,2 (21,4)	33,7	62,8	98,0
	Stainless steel R and high corrosion resistant steel HCR	50		14,5	21,0	39,2	61,2
		70		20,3	29,5	54,9	85,7
		80		23,2	33,7	62,8	98,0
Ductility factor		k_7	[-]	1,0			
with lever arm							
Characteristic resistance $M^0_{Rk,s}$	Steel zinc plated	Property class 4.8	[Nm]	29,9 (26,5)	52,3	132,9	259,6
		5.8		37,3 (33,2)	65,4	166,2	324,6
		8.8		59,8 (53,1)	104,6	265,9	519,3
	Stainless steel R and high corrosion resistant steel HCR	50		37,3	65,4	166,2	324,6
		70		52,3	91,5	232,6	454,4
		80		59,8	104,6	265,9	519,3
Partial factors [2)]							
Partial factor γ_{Ms}	Steel zinc plated	Property class 4.8	[-]	1,25			
		5.8		1,25			
		8.8		1,25			
	Stainless steel R and high corrosion resistant steel HCR	50		2,38			
		70		1,56 / fischer HCR: 1,25 [3)]			
		80		1,33			

[1)] Values in brackets are valid for undersized threaded rods with smaller stress area A_s for hot dip galvanised Threaded rods according to EN ISO 10684:2004+AC:2009.
[2)] In absence of other national regulations.
[3)] Only admissible for high corrosion resist. steel HCR, with $f_{yk} / f_{uk} \geq 0,8$ and A_5 >12 % (e.g. Anchor rods).

Table C2.1: Characteristic resistance to steel failure under tension and shear loading of rebars

Nominal diameter of the rebar			ϕ	10	12	14	16	20
Characteristic resistance to steel failure under tension loading								
Characteristic resistance	$N_{Rk,s}$	[kN]		$A_s \cdot f_{uk}$ [1)]				
Characteristic resistance to steel failure under shear loading								
Without lever arm								
Characteristic resistance	$V^0_{Rk,s}$	[kN]		k_6 [2)] $\cdot A_s \cdot f_{uk}$ [1)]				
Ductility factor	k_7	[-]		1,0				
With lever arm								
Characteristic resistance	$M^0_{Rk,s}$	[Nm]		$1{,}2 \cdot W_{el} \cdot f_{uk}$ [1)]				

[1)] f_{uk} respectively shall be taken from the specifications of the rebar.

[2)] In accordance with EN 1992-4:2018 section 7.2.2.3.1

k_6 = 0,6 for fasteners made of carbon steel with $f_{uk} \leq 500$ N/mm²

= 0,5 for fasteners made of carbon steel with $500 < f_{uk} \leq 1000$ N/mm²

= 0,5 for fasteners made of stainless steel

Table C3.1: Characteristic resistance to concrete failure under tension and shear loading

Size			All sizes
Tension loading			
Installation factor	γ_{inst}	[-]	See annex C4 to C6
Factors for the compressive strength of concrete > C20/25			
Increasing factor ψ_c for uncracked concrete $\tau_{Rk\,(X,Y)} = \psi_c \cdot \tau_{Rk\,(C20/25)}$	C25/30	[-]	1,05
	C30/37		1,09
	C35/45		1,12
	C40/50		1,16
	C45/55		1,19
	C50/60		1,21
Splitting failure			
Edge distance	$h / h_{ef} \geq 2{,}0$	$c_{cr,sp}$ [mm]	$1{,}0\ h_{ef}$
	$2{,}0 > h / h_{ef} > 1{,}3$		$4{,}6\ h_{ef} - 1{,}8\ h$
	$h / h_{ef} \leq 1{,}3$		$2{,}26\ h_{ef}$
Spacing	$s_{cr,sp}$		$2\ c_{cr,sp}$
Concrete cone failure			
Uncracked concrete	$k_{ucr,N}$	[-]	11,0
Edge distance	$c_{cr,N}$	[mm]	$1{,}5\ h_{ef}$
Spacing	$s_{cr,N}$		$2\ c_{cr,N}$
Factors for sustained tension loading			
Temperature range		[-]	43 °C / 60 °C
Factor	ψ^0_{sus}	[-]	0,61
Shear loading			
Installation factor	γ_{inst}	[-]	1,0
Concrete pry-out failure			
Factor for pry-out failure	k_8	[-]	2,0
Concrete edge failure			
Effective length of fastener for shear loading	l_f	[mm]	for $d_{nom} \leq 24$ mm: min (h_{ef}; 12 d_{nom})

Effective diameter of the fastener d_{nom}

Size			M10	M12	M16	M20
Anchor rods and Threaded rods	d_{nom}	[mm]	10	12	16	20

Size (nominal diameter of the rebar)		ϕ	10	12	14	16	20
Reinforcing bar	d_{nom}	[mm]	10	12	14	16	20

Table C4.1: Characteristic resistance to combined pull-out and concrete failure for Anchor rod / Threaded rod in hammer drilled holes; uncracked concrete

Anchor rod / Threaded rod			M10	M12	M16	M20
Combined pullout and concrete cone failure						
Calculation diameter	d	[mm]	10	12	16	20
Uncracked concrete						
Characteristic bond resistance in uncracked concrete C20/25						
Hammer-drilling with standard drill bit (dry or wet concrete)						
Temperature range I: 43 °C / 60 °C	$\tau_{Rk,ucr}$	[N/mm²]	8,6	8,6	7,7	7,0
Installation factors						
Dry or wet concrete	γ_{inst}	[-]	1,2			

Table C4.2: Characteristic resistance to combined pull-out and concrete failure for reinforcing bars in hammer drilled holes; uncracked concrete

Nominal diameter of the bar		ϕ	10	12	14	16	20
Combined pullout and concrete cone failure							
Calculation diameter	d	[mm]	10	12	14	16	20
Uncracked concrete							
Characteristic bond resistance in uncracked concrete C20/25							
Hammer-drilling with standard drill bit (dry or wet concrete)							
Temperature range I: 43 °C / 60 °C	$\tau_{Rk,ucr}$	[N/mm²]	8,6	8,6	8,0	7,7	7,0
Installation factors							
Dry or wet concrete	γ_{inst}	[-]	1,2				

Table C5.1: Displacements for Anchor rods and Threaded rods

Anchor rod / Threaded rod		M10	M12	M16	M20
Displacement-Factors for tension loading[1)]					
Uncracked concrete; Temperature range I					
$\delta_{N0\text{-Factor}}$	[mm/(N/mm²)]	0,08	0,09	0,10	0,11
$\delta_{N\infty\text{-Factor}}$		0,12	0,13	0,15	0,16
Displacement-Factors for shear loading[2)]					
Uncracked concrete; Temperature range I					
$\delta_{V0\text{-Factor}}$	[mm/kN]	0,15	0,13	0,10	0,08
$\delta_{V\infty\text{-Factor}}$		0,22	0,19	0,14	0,11

1) Calculation of effective displacement:

$\delta_{N0} = \delta_{N0\text{-Factor}} \cdot \tau$

$\delta_{N\infty} = \delta_{N\infty\text{-Factor}} \cdot \tau$

τ = acting bond strength under tension loading

2) Calculation of effective displacement:

$\delta_{V0} = \delta_{V0\text{-Factor}} \cdot V$

$\delta_{V\infty} = \delta_{V\infty\text{-Factor}} \cdot V$

V = acting shear loading

Table C5.2: Displacements for reinforcing bars

Nominal diameter of the rebar	ϕ	10	12	14	16	20
Displacement-Factors for tension loading[1)]						
Uncracked concrete; Temperature range I						
$\delta_{N0\text{-Factor}}$	[mm/(N/mm²)]	0,08	0,09	0,10	0,10	0,11
$\delta_{N\infty\text{-Factor}}$		0,12	0,13	0,14	0,15	0,16
Displacement-Factors for shear loading[2)]						
Uncracked concrete; Temperature range I						
$\delta_{V0\text{-Factor}}$	[mm/kN]	0,15	0,13	0,11	0,10	0,08
$\delta_{V\infty\text{-Factor}}$		0,22	0,19	0,16	0,14	0,11

1) Calculation of effective displacement:

$\delta_{N0} = \delta_{N0\text{-Factor}} \cdot \tau$

$\delta_{N\infty} = \delta_{N\infty\text{-Factor}} \cdot \tau$

τ = acting bond strength under tension loading

2) Calculation of effective displacement:

$\delta_{V0} = \delta_{V0\text{-Factor}} \cdot V$

$\delta_{V\infty} = \delta_{V\infty\text{-Factor}} \cdot V$

V = acting shear loading