PROHLÁŠENÍ O VLASTNOSTECH

DoP 0403
pro zarážecí kotva hollow ceiling anchor FHY (mechanický kotevní prvek pro použití v betonu) CS

1. Jedinečný identifikační kód typu výrobku: **DoP 0403**
2. Zamýšlené/zamýšlená použití: **Dodatečně instalovaný upevňovací prvek pro použití v betonu pro nekonstrukční systémy, viz. dodatek, obzvláště Přílohy B1-B4.**
3. Výrobce: **fischerwerke GmbH & Co. KG, Klaus-Fischer-Str. 1, 72178 Waldachtal, Německo**
4. Zplnomocněný zástupce: **–**
5. Systém/systémy POSV: **2+**
6. Evropský dokument pro posuzování: **EAD 330747-00-0601; 2018-08 (EU 2018/C 281/04)**
   Evropské technické posouzení: **ETA-21/0857; 2026-05-29**
   Subjekt pro technické posuzování: **TZÚS - Technical and Test Institute for Construction Prague**
   Oznámený subjekt/oznámené subjekty: **2873 TU Darmstadt**
7. Deklarovaná vlastnost/Deklarované vlastnosti:

Bezpečnost při používání (BWR 4)

Charakteristická únosnost v tahu (pro statickou a kvazistatickou akci):

Odolnost proti selhání oceli: NPD
Odolnost proti selhání vytažením: NPD
Odolnost proti selhání betonu: NPD
Pevnost: Příloha C1
Minimální vzdálenost od okraje a rozteč: Přílohy B2, B3
Okrajová vzdálenost bránící rozštěpení při zatížení: NPD

Charakteristická únosnost ve smyku (pro statickou a kvazistatickou akci):

Odolnost proti selhání oceli (smykové zatížení): Příloha C1 $V_{Rk,s}$=NPD; k_7=NPD
Odolnost proti selhání rozštěpením: NPD
Odolnost proti selhání okraje betonu: NPD

Charakteristická únosnost pro všechny směry zatížení a způsoby porušení pro zjednodušený návrh:

Charakteristická únosnost: Příloha C1

Životnost:

Životnost: Přílohy A2, B1

Bezpečnost v případě požáru (BWR 2)

Reakce na oheň:Třída (A1)

Odolnost proti požáru:

Požární odolnost proti selhání oceli (tahové zatížení): viz. dodatek, obzvláště Příloha C2, C3
Požární odolnost proti selhání vytažením (tahové zatížení): viz. dodatek, obzvláště Příloha C2, C3
Požární odolnost proti selhání oceli (smykové zatížení): viz. dodatek, obzvláště Příloha C2, C3

8. Příslušná technická dokumentace a/nebo specifická technická dokumentace: **–**

Vlastnosti výše uvedeného výrobku jsou ve shodě se souborem deklarovaných vlastností. Toto prohlášení o vlastnostech se v souladu s nařízením (EU) č. 305/2011 vydává na výhradní odpovědnost výrobce uvedeného výše.

Podepsáno za výrobce a jeho jménem:

i.V.

Dr.Christian Weber, Vedoucí vývoje

Dieter Pfaff, Vedoucí Mezinárodní produkční federace a řízení kvality

Tumlingen, 2026-07-01

Toto PoV bylo připraveno v různých jazykových mutacích. V případě rozporu vždy rozhoduje interpretace verze v anglickém jazyce.
Příloha obsahuje nepovinné a doplňkové informace v anglickém jazyce nad rámec zákonných požadavků.

Translation guidance Essential Characteristics and Performance Parameters for Annexes

Pokyny pro překlad Základní charakteristiky a výkonnostní parametry příloh

Safety in case of fire (BWR 2) **Bezpečnost v případě požáru (BWR 2)**		
1	Reaction to fire: **Reakce na oheň:**	Class Třída (A1)
Resistance to fire: **Odolnost proti požáru:**		
2	Fire resistance to steel failure (tension load): **Požární odolnost proti selhání oceli (tahové zatížení):**	$N_{Rk,s,fi}$ [kN]
3	Fire resistance to pull-out failure (tension load): **Požární odolnost proti selhání vytažením (tahové zatížení):**	$N_{Rk,p,fi}$ [kN]
4	Fire resistance to steel failure (shear load): **Požární odolnost proti selhání oceli (smykové zatížení):**	$V_{Rk,s,fi}$ [kN], $M^0_{Rk,s,fi}$ [Nm]
Safety and accessibility in use (BWR 4) **Bezpečnost při používání (BWR 4)**		
Characteristic resistance to tension load (static and quasi-static loading): **Charakteristická únosnost v tahu (pro statickou a kvazistatickou akci):**		
6	Resistance to steel failure: **Odolnost proti selhání oceli:**	$N_{Rk,s}$ [kN], E_s [N/mm^2]
7	Resistance to pull- out failure: **Odolnost proti selhání vytažením:**	$N_{Rk,p}$ [kN], ψ_c, $\tau_{Rk,p}$ [N/mm^2]
8	Resistance to concrete cone failure: **Odolnost proti selhání betonu:**	$k_{cr,N}$, $k_{ucr,N}$ [-], h_{ef}, $c_{cr,N}$ [mm]
9	Robustness: **Pevnost:**	γ_{inst} [-]
10	Minimum edge distance and spacing: **Minimální vzdálenost od okraje a rozteč:**	c_{min}, s_{min}, h_{min} [mm]
11	Edge distance to prevent splitting under load: **Okrajová vzdálenost bránící rozštěpení při zatížení:**	$N^0_{Rk,sp}$ [kN], $c_{cr,sp}$ [mm]
Characteristic resistance to shear load (static and quasi-static loading): **Charakteristická únosnost ve smyku (pro statickou a kvazistatickou akci):**		
12	Resistance to steel failure (shear load): **Odolnost proti selhání oceli (smykové zatížení):**	$V_{Rk,s}$ [kN], $M^0_{Rk,s}$ [Nm], k_7 [-]
13	Resistance to pry-out failure: **Odolnost proti selhání rozštěpením:**	k_8 [-]
14	Resistance to concrete edge failure: **Odolnost proti selhání okraje betonu:**	d_{nom}, l_f [mm]
Characteristic resistance for all load directions and modes of failure for simplified design: **Charakteristická únosnost pro všechny směry zatížení a způsoby porušení pro zjednodušený návrh:**		
15	Characteristic resistance: **Charakteristická únosnost:**	F^0_{Rk} [kN], s_{cr}, c_{cr} [mm]
Durability: **Životnost:**		
16	Durability: **Životnost:**	Description

Specific parts

1. Technical description of the product

The fischer hollow ceiling anchor FHY is a torque-controlled expansion anchor made of galvanised or stainless steel. It consists of an expansion sleeve and a cone with an internal thread and is anchored by torque-controlled expansion with a hexagon head bolt or threaded rod with nut and washer.

By tightening the screw/nut, the cone is pulled into the expansion sleeve and expanding it.

The product description is given in Annex 1.

2. Specification of the intended use in accordance with the applicable European Assessment Document (hereinafter EAD)

The performances given in Section 3 are only valid if the anchor is used in compliance with the specifications and conditions given in Annex B.

The provisions made in this European Technical Assessment are based on an assumed working life of the anchor of 50 years. The indications given on the working life cannot be interpreted as a guarantee given by the producer, but are to be regarded only as a means for choosing the products in relation to the expected economically reasonable working life of the works.

3. Performance of the product and references to the methods used for its assessment

3.1 Safety in case of fire (BWR 2)

Essential characteristic	Performance
Reaction to fire	Class A1 according to EN 13501-1
Resistance to fire	See Annex C2 and Annex C3

3.2 Safety and accessibility in use (BWR 4)

Essential characteristic	Performance
Characteristic resistance for all load directions and modes of failure for simplified design	See Annex C1
Durability	See Annex B1

4. Assessment and verification of constancy of performance (hereinafter AVCP) system applied, with reference to its legal base

According to the Decision 97/161/EC of the European Commission, the system of assessment verification of constancy of performance (see Annex IX to Regulation (EU) 2024/3110) is system 2+.

Following standards will be referred to in this European Technical Assessment:

EN 1993-1-4:2025	Eurocode 3 - Design of steel structures - Part 1-4: Stainless steel structures
EN 1993-1-4/NA:2020	National Annex - Nationally determined parameters - Eurocode 3: Design of steel structures - Part 1-4: General rules - Supplementary rules for stainless steels
EN ISO 4042:2022	Fasteners - Electroplated coating systems
EN ISO 898-1:2013	Mechanical properties of fasteners made of carbon steel and alloy steel - Part 1: Bolts, screws and studs with specified property classes - Coarse thread and fine pitch thread
EN ISO 898-2:2022	Fasteners - Mechanical properties of fasteners made of carbon steel and alloy steel - Part 2: Nuts with specified property classes
EN 13501-1:2018	Fire classification of construction products and building elements - Part 1: Classification using data from reaction to fire tests
EN ISO 3506-1:2020	Fasteners - Mechanical properties of corrosion-resistant stainless steel fasteners - Part 1: Bolts, screws and studs with specified grades and property classes
EN ISO 3506-2:2020	Fasteners - Mechanical properties of corrosion-resistant stainless steel fasteners - Part 2: Nuts with specified grades and property classes
EN 10139:2016+A1:2020	Cold rolled uncoated low carbon steel narrow strip for cold forming - Technical delivery conditions
EN ISO 683-7:2024	Heat-treatable steels, alloy steels and free-cutting steels - Part 7: Bright products of non-alloy and alloy steels
EN 10088-1:2023	Stainless steels - Part 1: List of stainless steels;
EN 10088-2:2024	Stainless steels - Part 2: Technical delivery conditions for sheet/plate and strip of corrosion resistant steels for general purposes
EN ISO 4017:2022	Fasteners - Hexagon head screws - Product grades A and B
EN 206:2013+A2:2021	Concrete - Specification, performance, production and conformity

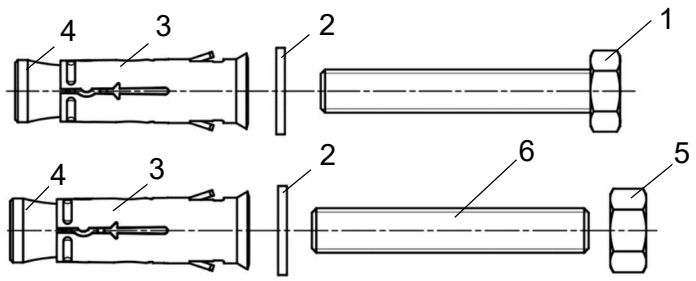

1 Hexagon screw
2 Washer
3 Expansion sleeve
4 Cone nut
5 Hexagon nut
6 Threaded rod

Installed conditions:

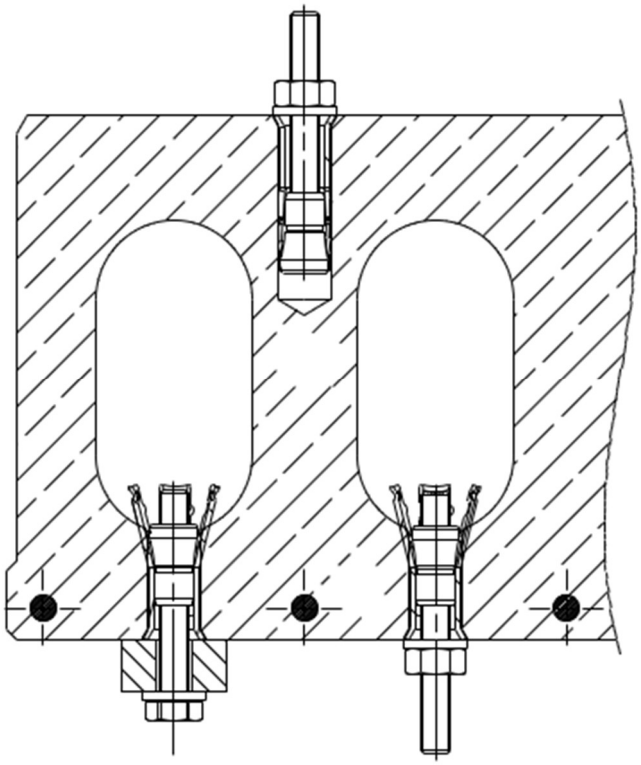

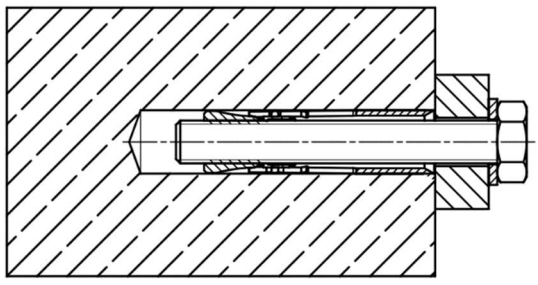

Figures not to scale

fischer hollow ceiling anchor FHY	**Annex A1**
Product description Installed conditions	

Product marking and dimensions:

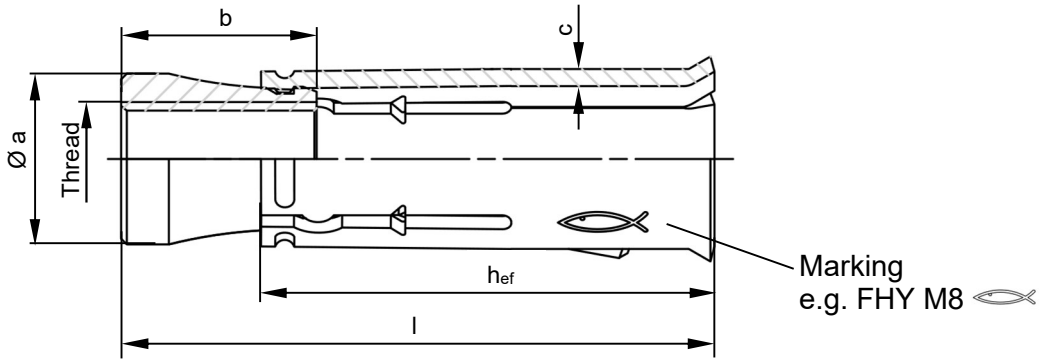

FHY: Carbon steel, galvanised
FHY R: Stainless steel

Table A2.1: Dimensions [mm]

Typ	h_{ef}	Thread	ø a	b	c	l
FHY M6	30	M6	9,6	12,0	1,0	37
FHY M8	35	M8	11,5	13,1	1,0	43
FHY M10	40	M10	15,0	17,2	1,5	52
FHY M12	40	M12	17,0	20,85	1,5	55

Table A2.2: Designations and materials FHY

Part	Designation	Material	
		FHY	FHY R
	Type of steel	Steel	Stainless steel R
		Zinc plated ≥ 5 µm, EN ISO 4042	Acc. to EN 10088 Corrosion resistance class CRC III acc. to EN 1993-1-4 and with EN 1993-1-4/NA
1	Hexagon screw [1)]	Steel, EN ISO 898-1 property class 8.8 (**M6**); property class 4.6, 5.8 or 8.8 (**M8**, **M10** and **M12**)	EN ISO 3506-1 property class ≥ 70
2	Washer [1)]	Cold strip, EN 10139	Stainless steel EN 10088
3	Expansion sleeve	Cold strip, EN 10139	
4	Cone nut	Steel EN ISO 683-7	
5	Hexagon nut [1)]	Steel EN ISO 898-2 property class 8 (**M6**); 4 or 5 or 8 (**M8**, **M10** and **M12**)	Stainless steel EN ISO 3506-2 property class ≥ 70
6	Threaded rod [1)]	Steel EN ISO 898-1, property class 8.8 (**M6**); 4.8, 5.8 or 8.8 (**M8**); 4.6, 5.8 or 8.8 (**M10** and **M12**)	Stainless steel EN ISO 3506-1; property class ≥ 70

[1)] Commercial threaded rods, washers, hexagon nuts and hexagon screws may also be used if the requirements in Table A2.2 are fulfilled. The strength of threaded parts in accordance with EN ISO 898-1 must be specified by the design engineer according to Table C1.1.

Figure not to scale

fischer hollow ceiling anchor FHY

Product description
Product label and dimensions

Annex A2

Specifications of intended use

Fastenings subject to:

Size	FHY, FHY R			
	M6	M8	M10	M12
Hammer drilling with standard drill bit			✓	
Hammer drilling with hollow drill bit with automatic cleaning 			✓	
Static and quasi-static loads			✓	
Cracked and uncracked concrete				
Fire exposure				

Base materials:

- Compacted reinforced and unreinforced normal weight concrete without fibres (cracked and uncracked) according to EN 206.
- Strength classes ≥ C20/25 according to EN 206.
- Pre-stressed hollow core slabs, where the cavity width does not exceed 4,2 times the web width ($b_H \leq 4{,}2 \times b_{St}$) with strength classes ≥ C45/55.

Use conditions (Environmental conditions):

- Structures subject to dry internal conditions (FHY, FHY R)
- For all other conditions according to EN 1993-1-4 corresponding to corrosion resistance class
  - CRC III: FHY R

Design:

- Fastenings are to be designed under the responsibility of an engineer experienced in fastenings and concrete work
- Verifiable calculation notes and drawings are to be prepared taking account of the loads to be anchored. The position of the fastener is indicated on the design drawings (e.g. position of the fastener relative to reinforcement or to supports, etc.).
- Design under static or quasi-static actions shall be performed in accordance with EN 1992-4, design method B.

Figures not to scale

fischer hollow ceiling anchor FHY	**Annex B1**
Intended use Specifications	

Table B2.1: Installation parameters

Size			FHY, FHY R			
			M6	M8	M10	M12
Nominal drill hole diameter	d_0 =	[mm]	10	12	16	18
Effective embedment depth	h_{ef} ≥		30	35	40	40
Depth of drill hole to deepest point	h_1 ≥		50	60	65	70
Diameter of clearance hole in the fixture	d_f ≤		7	9	12	14
Length of screw [1]	l_s ≥		37 + t_{washer} + t_{fix}	43 + t_{washer} + t_{fix}	52 + t_{washer} + t_{fix}	55 + t_{washer} + t_{fix}
Length of the threaded bolt	l_b ≥		42 + t_{washer} + t_{fix}	50 + t_{washer} + t_{fix}	60 + t_{washer} + t_{fix}	65 + t_{washer} + t_{fix}
Required setting torque FHY	T_{inst} =	[Nm]	8	10	20	30
Required setting torque FHY R	T_{inst} =	[Nm]	15	20	40	50
[1] For screws with shaft according to EN ISO 4017 the shaft length must be ≤ t_{fix}						
Pre-stressed hollow core slab ≥ C45/55 web thickness ≥ 25mm						
Minimum spacing	s_{min} ≥	[mm]	70	70	80	80
Minimum edge distance	c_{min} ≥	[mm]	100	100	100	150
Solid concrete ≥ C20/25						
Minimum spacing	s_{min} ≥	[mm]	70	70	80	80
Minimum edge distance	c_{min} ≥	[mm]	100			
Minimum thickness of concrete member	h_{min} ≥	[mm]	100			

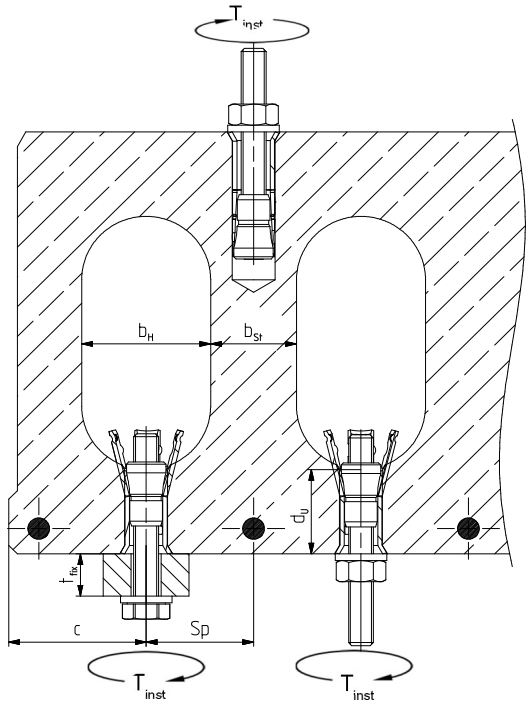

Anchoring in pre-stressed hollow core slabs and in solid material

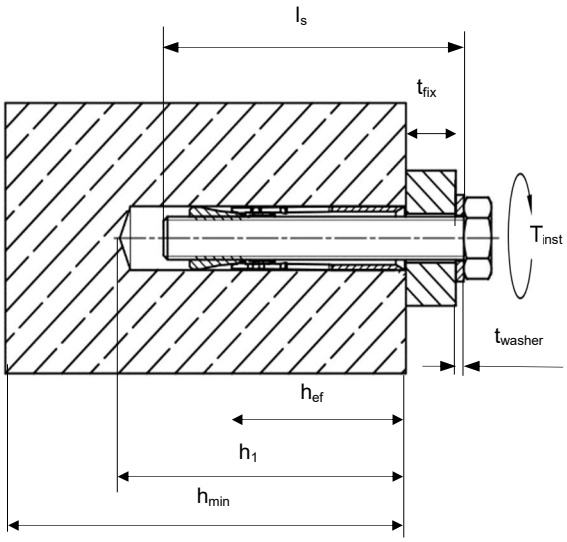

S_p = Distance to the tensioning strands
t_{fix} = Thickness of fixture
d_u = Thickness of the slab web
c = Edge distance
T_{inst} = Installation moment
b_H = Cavity width
b_{st} = Web thickness

Figures not to scale

fischer hollow ceiling anchor FHY

Intended use
Installation parameters

Annex B2

Picture B3.1: Anchoring in pre-stressed hollow core slab – Anchoring condition: $b_H \leq 4{,}2 \times b_{St}$

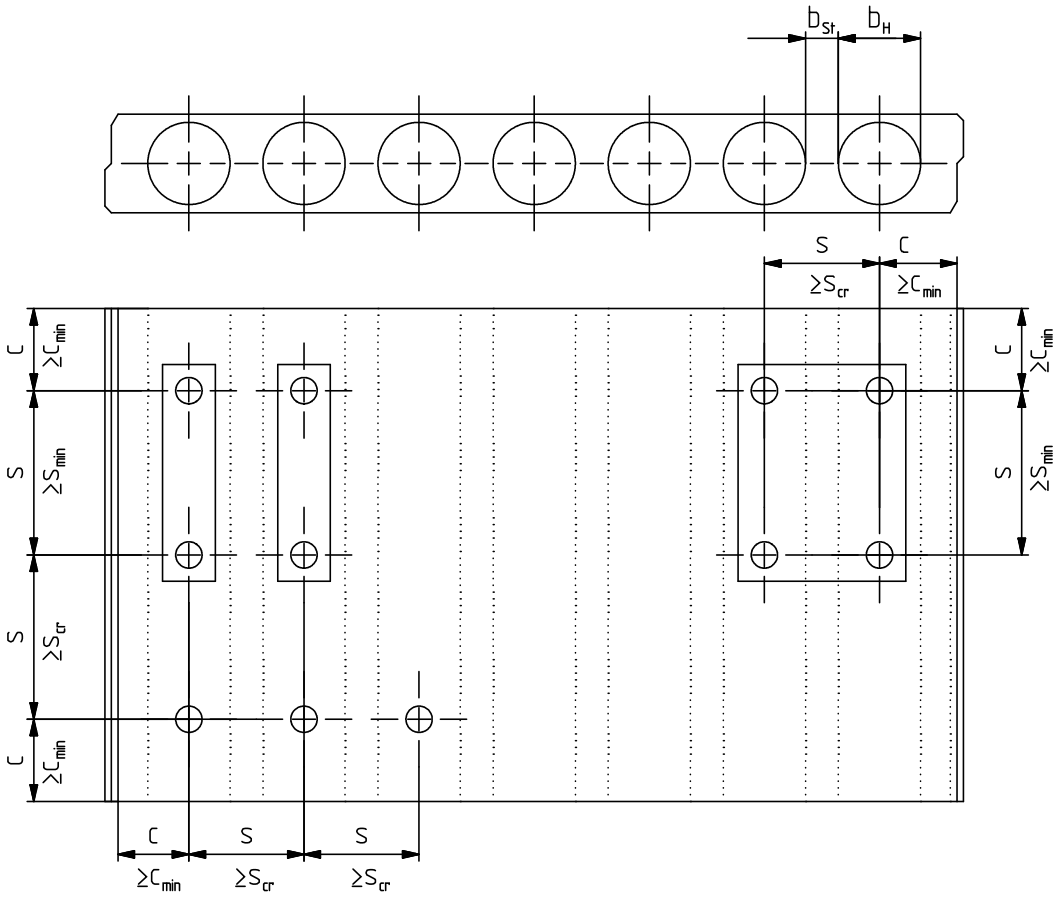

s_{min} and c_{min} see Annex B2 – s_{cr} see Annex C1.

Picture B3.2: Minimum distance S_p to the tensioning strand

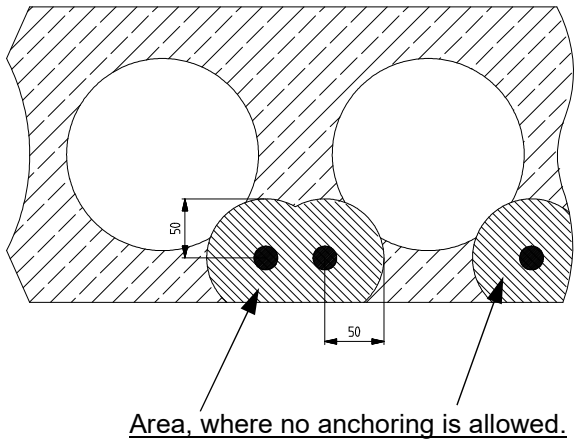

The anchor must have a distance from the anchor axis to the tensioning strands of at least 50 mm.

Figures not to scale

fischer hollow ceiling anchor FHY	
Intended use Installation parameters	**Annex B3**

Installation instructions:

- Fastener installation carried out by appropriately qualified personnel and under the supervision of the person responsible for technical matters on the site.
- Hammer or hollow drilling.
- Drill hole created perpendicular +/- 5° to concrete surface, positioning without damaging the reinforcement.
- In case of aborted hole: new drilling at a minimum distance twice the depth of the aborted drill hole or smaller distance if the aborted drill hole is filled with high strength mortar and if under shear or oblique tension load it is not in the direction of load application.
- In Precast pre-stressed hollow core slabs the anchor FHY may be installed from all directions, if the web thicknesses is ≥ 25mm and the spacing to the tensioning strands of ≥ 50mm is observed (also in the area of solid material).

1a) Hammer drill (e.g. fischer Quattric II)		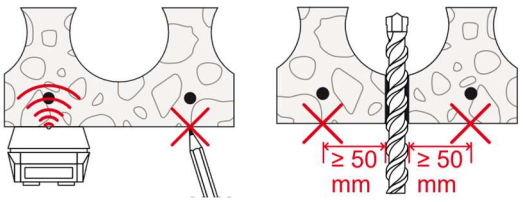 **Prestressed hollow core slabs:** Determine and mark the position of the tensioning strands, e.g. with a suitable scanner.	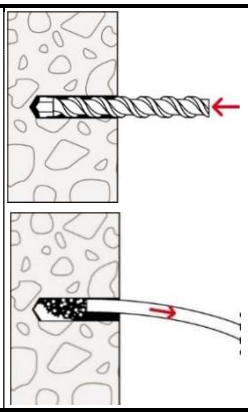 **Solid material/solid areas of hollow core slabs**
1b) Hollow drill (e.g. fischer FHD)		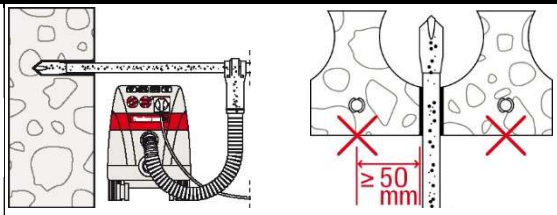 Drill the hole with automatic cleaning	-

Installation of the fastener (exemplary in a pre-stressed hollow core slabs)

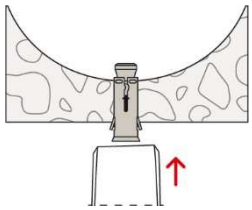	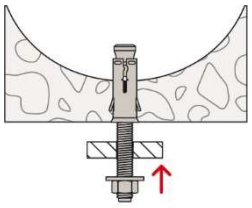	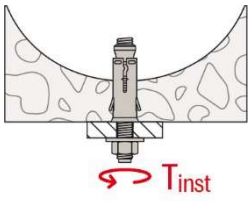	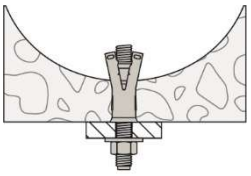
Set the fastener	Fixation of fixture	Apply T_{inst}	Installed fastener

Figures not to scale

fischer hollow ceiling anchor FHY	**Annex B4**
Intended use Installation instructions	

Table C1.1: Characteristic resistance for all load directions

Size					FHY, FHY R M6	FHY, FHY R M8	FHY, FHY R M10	FHY, FHY R M12
Concrete solid material								
Characteristic resistance in C20/25			F^0_{Rk}	[kN]	3,0	6,5	8,5	8,5
Partial factor			γ_{Mc}	[-]	1,5	1,5	1,5	1,5
Characteristic spacing			s_{cr}	[mm]	200	200	200	200
Characteristic edge distance			c_{cr}	[mm]	100	105	120	120
Pre-stressed hollow core slab ≥ C45/55								
Characteristic resistance	$d_u \geq 25$ mm < 30 mm		F^0_{Rk}	[kN]	5,0	7,0	8,0	9,0
	$d_u \geq 30$ mm < 40 mm				5,0	7,0	10,0	9,0
	$d_u \geq 40$ mm				5,0	7,0	10,0	10,0
Partial factor			γ_{Mc}	[-]	1,5	1,5	1,5	1,5
Characteristic spacing	$d_u \geq 25$ mm < 30 mm		s_{cr}	[mm]	200	200	200	200
	$d_u \geq 30$ mm < 40 mm				200	200	200	200
	$d_u \geq 40$ mm				200	200	200	200
Characteristic edge distance	$d_u \geq 25$ mm < 30 mm		c_{cr}	[mm]	100	100	100	150
	$d_u \geq 30$ mm < 40 mm				100	100	100	150
	$d_u \geq 40$ mm				100	105	120	150
Characteristic bending moment (screw)								
FHY	Property class	4.6	$M^0_{Rk,s}$	[Nm]	-[2]	15,0	29,9	52,4
		4.8			-[2]	-[2]	-[2]	-[2]
		5.8			-[2]	18,7	37,4	65,5
		8.8			12,2	30,0	62,3	109,2
FHY R		≥ A4-70			10,7	26,4	52,3	91,7
FHY	Partial factor for property class	4.6	γ_{Ms}[1]	[-]	-[2]	1,67		
		4.8 / 5.8			-[2]	1,25		
		8.8			1,25			
FHY R		≥ A4-70			1,56			
Characteristic bending moment (threaded rod)								
FHY	Property class	4.6	$M^0_{Rk,s}$	[Nm]	-[2]	-[2]	29,9	52,4
		4.8			-[2]	15,0	-[2]	-[2]
		5.8			-[2]	18,7	37,4	65,5
		8.8			12,2	30,0	62,3	109,2
FHY R		≥ A4-70			10,7	26,4	52,3	91,7
FHY	Partial factor for property class	4.6	γ_{Ms}[1]	[-]	-[2]	1,67		
		4.8 / 5.8			-[2]	1,25		
		8.8			1,25			
FHY R		≥ A4-70			1,56			

[1] In absence of other national regulations.
[2] No Performance assessed.

fischer hollow ceiling anchor FHY

Performances
Characteristic resistance for all load directions

Annex C1

Table C2.1: Characteristic resistance under **fire exposure** for concrete solid material for all load directions

Size				FHY M6	FHY M8	FHY M10	FHY M12
Characteristic resistance for all load directions **Concrete solid material**	$F_{Rk,fi}$	R30	[kN]	0,75	1,25	1,74	1,74
		R60		0,58	1,25	1,74	1,74
		R90		0,38	0,80	1,30	1,74
		R120		0,28	0,57	0,96	1,39
Characteristic resistance for shear load with lever arm **Concrete solid material**	$M^0_{Rk,fi}$	R30	[Nm]	0,60	1,80	3,40	6,00
		R60		0,40	1,30	2,50	4,50
		R90		0,30	0,80	1,70	2,90
		R120		0,20	0,60	1,20	2,20

Size				FHY R M6	FHY R M8	FHY R M10	FHY R M12
Characteristic resistance for all load directions **Concrete solid material**	$F_{Rk,fi}$	R30	[kN]	0,75	1,25	1,74	1,74
		R60		0,75	1,25	1,74	1,74
		R90		0,75	0,96	1,06	1,54
		R120		0,60	0,48	0,69	1,00
Characteristic resistance for shear load with lever arm **Concrete solid material**	$M^0_{Rk,fi}$	R30	[Nm]	1,90	2,90	3,30	5,70
		R60		1,30	2,00	2,30	4,10
		R90		0,80	1,00	1,40	2,40
		R120		0,50	0,50	0,90	1,60

Table C3.1: Characteristic resistance under **fire exposure** for pre-stressed hollow core slabs for all load directions

Size					FHY M6	FHY M8	FHY M10	FHY M12
Characteristic resistance for all load directions **Pre-stressed hollow core slabs**	$d_u \geq 25$ mm < 30 mm	$F_{Rk,fi}$	R30	[kN]	0,78	1,15	1,15	1,15
			R60		0,58	1,15	1,15	1,15
			R90		0,38	0,80	1,15	1,15
			R120		0,28	0,57	0,92	0,92
	$d_u \geq 30$ mm < 40 mm		R30	[kN]	0,78	1,52	1,52	1,52
			R60		0,58	1,26	1,52	1,52
			R90		0,38	0,80	1,30	1,52
			R120		0,28	0,57	0,96	1,21
	$d_u \geq 40$ mm		R30	[kN]	0,78	1,71	2,33	2,33
			R60		0,58	1,26	1,98	2,33
			R90		0,38	0,80	1,30	1,89
			R120		0,28	0,57	0,96	1,39
Characteristic resistance for shear load with lever arm **Pre-stressed hollow core slabs $d_u \geq 25$ mm**		$M^0_{Rk,fi}$	R30	[Nm]	0,60	1,80	3,40	6,00
			R60		0,40	1,30	2,50	4,50
			R90		0,30	0,80	1,70	2,90
			R120		0,20	0,60	1,20	2,20

Size					FHY-R M6	FHY-R M8	FHY-R M10	FHY-R M12
Characteristic resistance for all load directions **Pre-stressed hollow core slabs**	$d_u \geq 25$ mm < 30 mm	$F_{Rk,fi}$	R30	[kN]	1,15	1,15	1,15	1,15
			R60		1,15	1,15	1,15	1,15
			R90		1,04	0,96	1,06	1,15
			R120		0,68	0,48	0,69	0,92
	$d_u \geq 30$ mm < 40 mm		R30	[kN]	1,52	1,52	1,52	1,52
			R60		1,52	1,52	1,52	1,52
			R90		1,04	0,96	1,06	1,52
			R120		0,68	0,48	0,69	1,00
	$d_u \geq 40$ mm		R30	[kN]	1,52	1,91	2,33	2,33
			R60		1,52	1,91	1,80	2,33
			R90		1,04	0,96	1,06	1,54
			R120		0,68	0,48	0,69	1,00
Characteristic resistance for shear load with lever arm **Pre-stressed hollow core slabs $d_u \geq 25$ mm**		$M^0_{Rk,fi}$	R30	[Nm]	1,90	2,90	3,30	5,70
			R60		1,30	2,00	2,30	4,10
			R90		0,80	1,00	1,40	2,40
			R120		0,50	0,50	0,90	1,60