ДЕКЛАРАЦИЯ ЗА ЕКСПЛОАТАЦИОННИ ПОКАЗАТЕЛИ

DoP 0261

за fischer-Zykon-анкер за фасадни панели FZP II

BG

1. Уникален идентификационен код на типа продукт: **DoP 0261**

2. Предвидена употреба/употреби: **Крепеж за фиксиране в задната част на фасадни панели, изработени от селектиран естествен камък съгласно EN 1462:2015, виж Приложението, по-специално Приложения B1 - B7.**

3. Производител: **fischerwerke GmbH & Co. KG, Klaus-Fischer-Str. 1, 72178 Waldachtal, Германия**

4. Упълномощен представител: **–**

5. Система/системи за оценяване и проверка на постоянството на експлоатационните показатели: **2+**

6. Европейски документ за оценяване: **EAD 330030-00-0601**
   Европейска техническа оценка: **ETA-11/0145; 2018-07-01**
   Орган за техническа оценка: **DIBt- Deutsches Institut für Bautechnik**
   Нотифициран орган/органи: **2873 TU Darmstadt**

7. Декларирани експлоатационни показатели:

Механична устойчивост и здравина (BWR 1)

Характерна устойчивост на пробив или повреда при изтегляне при натоварване на опън:	Приложение C1	
Характерна устойчивост на пробив или повреда при изтегляне при натоварване на срез:	Приложение C1	
Характерна устойчивост на пробив или повреда при изтегляне, при комбинирани натоварвания и натоварване на срез:	Приложение C1	Y=NPD; F_{Rk}=NPD
Отстояние от ръба и междуосови разстояния:	Приложения B2, C1	
трайност:	Приложение A3 (CRC-III)	
Характерна устойчивост на разрушаване на стоманата при натоварване на опън и срез:	NPD	

Пожарна безопасност (BWR 2)

Реакция на огън:	Клас (A1)

8. Подходяща техническа документация и/или специфична техническа документация: **–**

Експлоатационните показатели на продукта, посочени по-горе, са в съответствие с декларираните експлоатационни показатели. Настоящата декларация за експлоатационни показатели се издава в съответствие с Регламент (ЕС) № 305/2011, като отговорността за нея се носи изцяло от посочения по-горе

Подписано за и от името на производителя от:

Dr.-Ing. Oliver Geibig, Управляващ директор Бизнес звена и инженеринг

Jürgen Grün, Управляващ директор Химия и качество

Tumlingen, 2021-01-11

Тази Декларация за съответствие е изготвена на различни езици. В случай, че възникне спор, относно интерпретирането, трябва да се вземе предвид английската версия.

Приложението съдържа доброволна и допълнителна информация на английски език в обем и съдържание, надхвърлящи (независимо от езика) законовите изисквания.

Specific Part

1 Technical description of the product

The fischer-Zykon-panel anchor FZP II is a special anchor of sizes M 6, M 8 and M 10 which consists of a cone bolt (with external thread or internal thread), an expansion part, a sleeve and, if need be, a nut. Cone bolt and expansion part are made of stainless steel. The sleeve is made of stainless steel or carbon. The nut is made of stainless steel or aluminium. The anchor is put into an undercut drill hole and by driving-in of the sleeve it is placed form-fit.

The product description is given in Annex A.

2 Specification of the intended use in accordance with the applicable European Assessment Document

The performances given in Section 3 are only valid if the anchor is used in compliance with the specifications and conditions given in Annex B.

The verifications and assessment methods on which this European Technical Assessment is based lead to the assumption of a working life of the anchors of at least 50 years. The indications given on the working life cannot be interpreted as a guarantee given by the producer, but are to be regarded only as a means for choosing the right products in relation to the expected economically reasonable working life of the works.

3 Performance of the product and references to the methods used for its assessment

3.1 Mechanical resistance and stability (BWR 1)

Essential characteristic	Performance
Characteristic resistance for tension and shear loads	See Annex C 1
Anchor distances and spacing	See Annex B 3 and Annex C 1
Durability	Corrosion Resistance Class (CRC) III in accordance with EN 1993-1-4:2015

3.2 Safety in case of fire (BWR 2)

Essential characteristic	Performance
Reaction to fire	Class A1
Resistance to fire	No performance assessed

4 Assessment and verification of constancy of performance (AVCP) system applied, with reference to its legal base

In accordance with EAD No. 330030-00-0601 the applicable European legal act is: [97/161/EG].

The system to be applied is: 2+

Mounting condition

Figure A1:

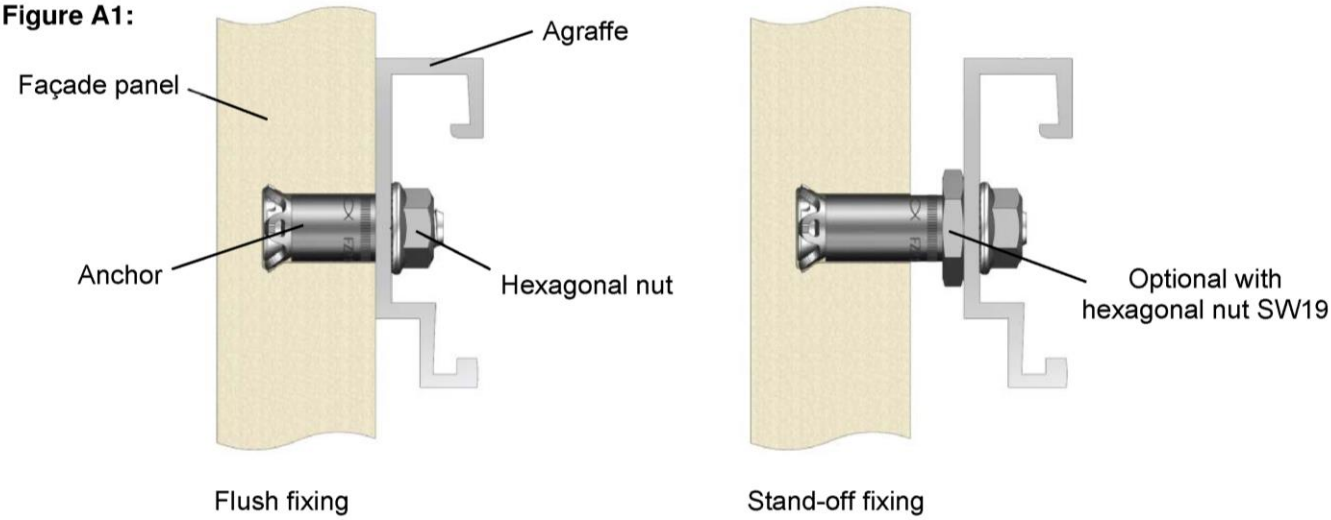

Example of façade panel on substructure

Figure A2:

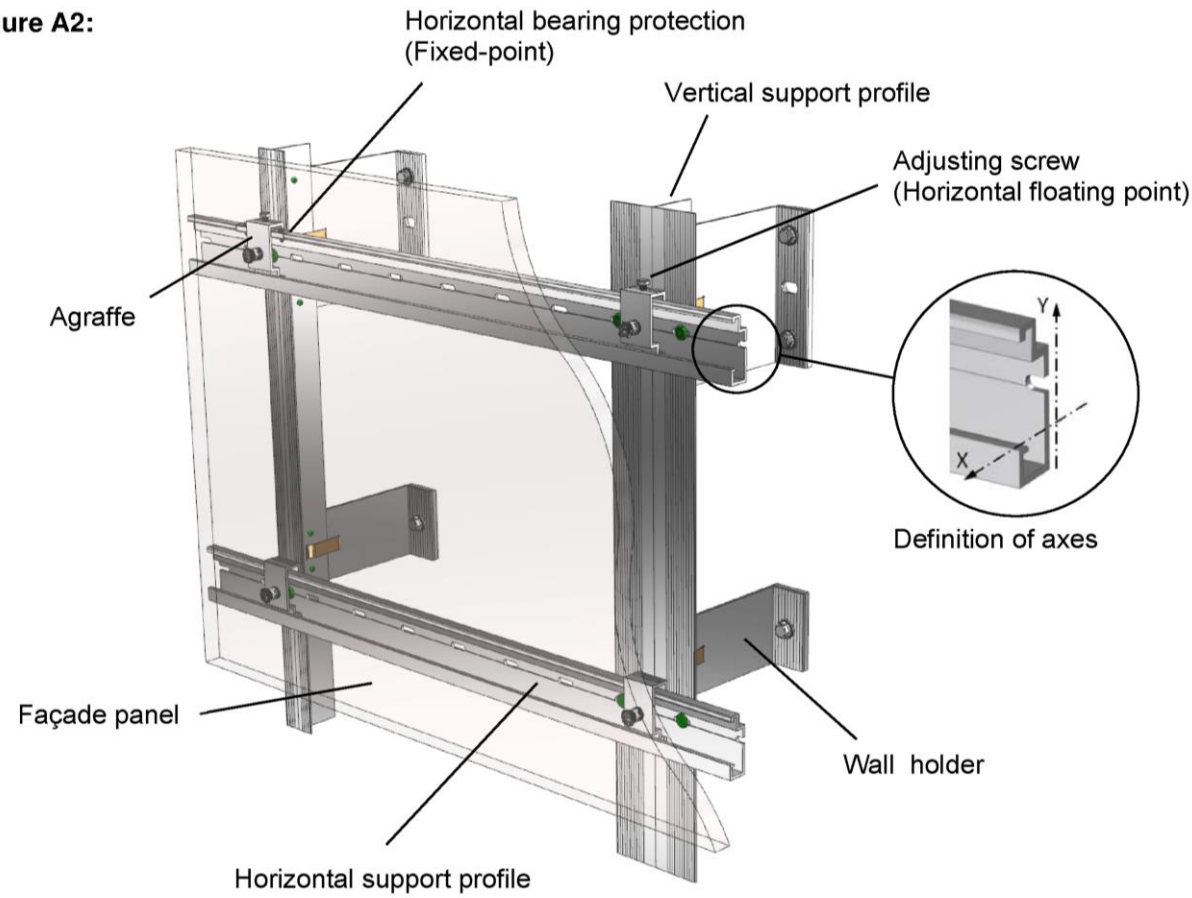

fischer Zykon panel anchor FZP	**Annex A 1**
Product description Product and built-in state	Appendix 2 / 12

Type of anchor

Anchor with external thread

Figure A3:

With carbon fibre sleeve

With steel sleeve

With carbon fibre sleeve and sleeve flange

With Steel sleeve and hex nut SW19

With steel sleeve and hex nut ES [1)]

[1)] Hex nut ES for suspension systems

Anchor with internal thread

Figure A4:

With carbon fibre sleeve

With steel sleeve

Identification system

Example. FZP II 13 x 26 M8 / SO / 17 AI

- AI — Material of the hexagon nut SW19
- 17 — Free thread length **b** after mounting
- SO — **S**tand **O**ff fixing
- M8 — Thread diameter
- 26 — Drill hole depth $\mathbf{h_v}$ (for FZP $h_v = h_1 = h_s$)
- 13 — Ø Cylindrical drill hole $\mathbf{d_0}$
- FZP II — **F**ischer **Z**ykon **P**anel anchor II

Parts of anchor and materials

Cone bolt

Figure A5:

With external thread
M6 / M8 / M10

With internal thread
M6 / M8

Material identification

Option:
Anti rotation lock
Nose or frontal profiling

Option:
Identifying mark, drive, e.g.: Slot; polygonal (Outside; inside); spanner flats

Expansion part

Figure A6:

Sleeve

Figure A7:

Carbonfibre

Stainless steel

Type designation e.g. FZP…

Supplementary components

Figure A8:

Hex nut SW 19

Hex nut ES

Identifying mark of the producer

Marking: Al = Aluminum
Optional: A4 = stainless steel

Table A1: Material of anchor parts

Anchor parts	Material
Cone bolt	Stainless steel, EN 10088 :2014
Expansion part	Stainless steel, EN 10088 :2014
Sleeve	Stainless steel, EN 10088 :2014
Carbonsleeve	Polyamide 6.6 CF
Hexagonal nut SW19	Aluminium, EN 755 :2016, Stainless steel, EN 10088 :2014
Hexagonal nut ES	Aluminium, EN 755 :2016, Stainless steel, EN 10088 :2014

Specifications of intended use

Anchorages subject to:

- Static and quasi-static loads.

Anchorage ground:

- Natural stone facade panels according to EN 1469:2015.
- The used material is free of crevices and mechanically effective cracks and alterations.
- Natural stone classified in accordance with Table B1.
- Characteristic values of the panels correspond to Table B2.

Table B1: Stone groups for façade panels made of natural stone

Stone group		Natural stone type	Boundary conditions
I	High quality intrusive rocks (plutonic rocks)	Granite, granitite, tonalite, diorite, monzonite, gabbro, other magmatic plutonic rocks	None
II	Metamorphic rocks with „hard stone characteristics“	Quarzite, granulite, gneiss, migmatite	None
III	High quality extrusive rocks (volcanic rocks)	Basalt and basaltic lava without harmful ingredients (like sun burner basalt)	Minimum density ρ: basalt: 2,7 kg/dm³ basaltic lava: 2,2 kg/dm³
IV	Sedimentary rocks with „hard stone characteristics“ [1)]	Sandstone, limestone and marble	Sandstone: 2.1 kg/dm³

[1)] For façade panels made of natural stones with planes of anisotropies, the difference between the flexural strength determined parallel to the planes of anisotropy and perpendicular to the edges of the planes of anisotropy shall not be more than 50 %.

Use conditions (Environmental conditions):

- In accordance with EN 1993-1-4:2015 dependent on Corrosion Resistancy Class (CRC) (ETA Section 3.1)

Design:

- The design of anchorages under static and quasistatic load is carried out in accordance with:
  EOTA Technical Report TR 062 “Design of fasteners for façade panels made of natural stone“.
- The façade panels, their fixings as well as the substructure including its connection to wall brackets and their connection to the construction works are designed for the respective case of application under the responsibility of an engineer skilled in the field of façade construction.
- Verifiable calculation notes and drawings shall be prepared taking account of the loads to be anchored, the nature and strength of the base materials and the dimensions of the anchorage members as well as of the relevant tolerances. The position of the anchor is indicated on the design drawings.

Installation:

- The drillings are done at the factory or on site under workshop conditions; when making the drillings on site the execution is supervised by the responsible project supervisor or a skilled representative of the project supervisor.
- Making of the undercut drilling is done with a special drill bit or a special CNC drill bit according to Annex B 4 and a special drilling device in accordance with the information deposited with Deutsches Institut für Bautechnik.
- The drilling residues are removed from the drill hole.
- In case of aborted hole: new drilling at a minimum distance away of twice the depth of the aborted hole.
- The geometry of the drill hole is checked on 1 % of all drillings. The following dimensions shall be checked and documented according to manufacturer's information and testing instructions by means of a control aids according to Annex B 7, Figure B5, B6 and B7.
  - Diameter of the cylindrical drill hole.
  - Diameter of the undercut.
  - Remaining wall thickness (drill hole depth and panel thickness respectively).
- If the tolerance given in Annex B 4, Table B2 is exceeded, the geometry of the drill hole shall be checked on 25 % of the drillings performed. No further drill hole may exceed the tolerances otherwise all the drill holes shall be controlled. Drilling holes falling below or exceeding the tolerances shall be rejected.

  Note: Checking the geometry of the drill hole on 1 % of all drillings means that on one of the 25 panels (this corresponds to 100 drillings for panels with 4 undercut anchors) one drilling shall be checked. If the tolerances given in Annex B 4 Table B2 are exceeded the extent of the control shall be increase to 25 % of the drillings, i.e. one drilling each shall be checked on all the 25 panels.
- The anchors are installed in a deformation controlled manner. For this purpose suitable installation tools per Annex B 5, Figure B4 shall be used. The anchor is set correctly if the bolt projection "b" in accordance to Annex A 2 (designation system) according to Annex B 6 Figure B9 and B10 is observed. For flush mounting, the sleeve must not project beyond the plate surface. Internal thread anchors are mounted flush or recessed according to Annex B 6.
- During transport and storage on site the façade panels are protected from damages; the façade panels are not to be hung up jerkily (if need be lifters shall be used for hanging up the façade panels); façade panels and reveal panels respectively with incipient cracks are not be installed.
- The façade panels are arranged in a "reclined" or "upright" position, they also may be fixed at façade soffits.
- The façade are installed by skilled specialists and the laying instructions of the manufacturer shall be paid attention to.
- The façade panels must not be used for the transmission of scheduled impact loads and for the protection against falling.
- Overhead installation is allowed (e.g.: fastening cladding of ceilings)

Table B2: Characteristic values of façade and reveal panels made of nature stones

Façade panels				
Nominal panel thickness		h_{nom}	[mm]	20 (30) [1] $\leq h_{nom}$
Maximum panel size		A	[m²]	3,0
Maximum side lenght		H bzw. L	[m]	3,0
Number of anchors (rectangular arrangement)		N	[-]	4
Embedment depth [2]		h_s	[mm]	$12 \leq h_s \leq 38$
Minimum edge distance [3]		a_{rL} or a_{rH}	[m]	50
Maximum edge distance		a_{rL} or a_{rH}	[mm]	0,25 L bzw. 0,25 H
Minimum spacing [3]		a_L or a_H	[mm]	8 h_s
Minimum residual wall thickness [4]		h_r	[mm]	0,4 h_{nom}
Minimum characteristic flexural strength in accordance with EN 12372				
Padang Cristallo G603, China	Stone group I	$\sigma_{5\%} \geq$	[N/mm²]	13,4
Jura Limestone (yellow), Germany	Stone group IV	$\sigma_{5\%} \geq$	[N/mm²]	12,4

1) For sandstone, limestone and basaltlava: panel thickness $h \geq 30$ mm, if the bending strength of the material $\sigma_{5\%} < 8$ N/mm².
2) $h_s = (h_1) = (h_v)$ in 1 mm steps only (12, 13, 14 mm ... 38 mm) - tolerances see Annex B 4, Table B3, footnote 3)
3) For small fitting, differential or fill in pieces, the minimum edge distance or spacing shall be chosen constructively. In case of design under static loading using FEM, smaller edge distances are allowed.
4) Only for stand-off fixing.

Figure B1: Definition of edge and centre distance

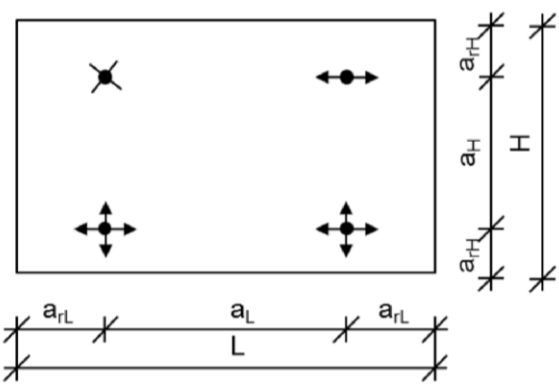

Legende:

a_{rL}, a_{rH} = Edge distance – anchor distance to the panel edge
a_L, a_H = Spacing – Distance between the anchors
L = Length of the panel in horizontal direction
H = Length of the panel in vertical direction
= Fixed bearing (fixed support)
= Horizontal slide bearing (slide support)
= Horizontal and vertical slide bearing (slide support)

Table B3: Drill hole dimensions

Drill hole						
Drill bit ∅ f [1]	∅ d_0 [mm] [2]	∅ d_1 [mm] [2]	FZPII	n	h_1 [mm] [2) 3)]	h_r [mm] [4]
FZPB 9	11 $^{+0,4}_{-0,2}$	13,5 ±0,3	M6	≈ 4	$12 \leq h_1 \leq 38$	≥ 0,4 h
FZPB 11						
FZPB 11	13 $^{+0,4}_{-0,2}$	15,5 ±0,3	M8 / M6i			
FZPB 13						
FZPB 13	15 $^{+0,4}_{-0,2}$	17,5 ±0,3	M10 / M8i			
FZPB 15						

[1] Drill bits for various drilling methods.

[2] Dimensions can be checked with the appropriate control equipment in accordance with (Annex B 5).

[3] Tolerances flush mounting: $h_1 = h_v$ $^{+0,4}_{-0,1}$

[4] Only for stand off fixing.

Figure B2: Drill bit example

Figure B3: Geometrie of drill hole

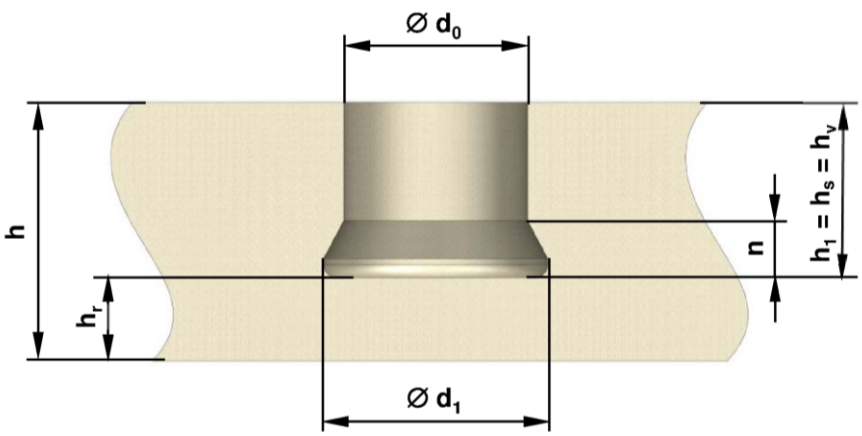

Setting tools

Figure B4:

Drive in tool
FZE

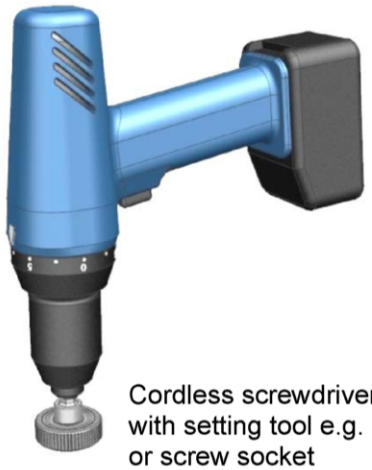

Cordless screwdriver
with setting tool e.g. SGA
or screw socket

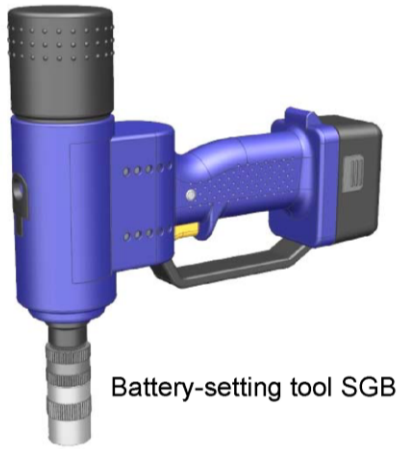

Battery-setting tool SGB

Means for undercut control ∅ d_1

Figure B5:

Internal quicktest

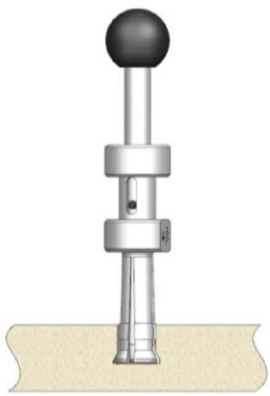

HVL (Undercut minimum volume gauge)

Go / no Go gauge for
checking cylindrical drill hole diameter ∅ d_0

Figure B6:

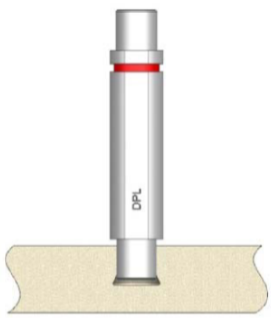

DPL (Diameter gauge)

Means for measuring borehole depth h_1 and borehole diameter h_0

Figure B7:

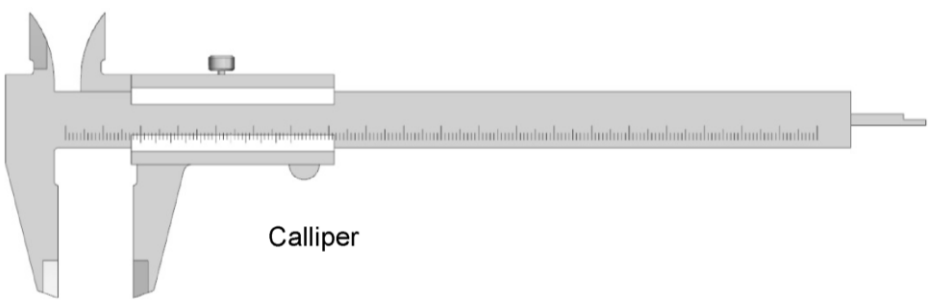

Calliper

fischer Zykon panel anchor FZP	**Annex B 5**
Intended use Setting devices and testing equipment	Appendix 9 / 12

Type of mounting and dimensional definition

Recessed fixing

Figure B8:

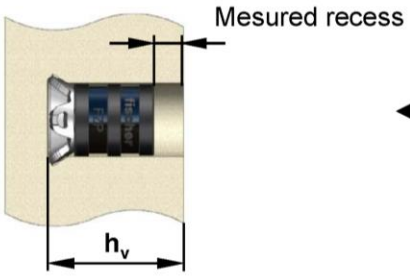

Examples of an adaptation for stand off fixing

Figure B9:

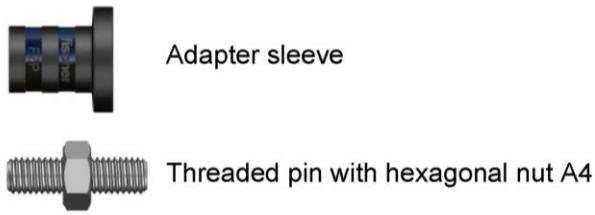

Flush fixing

Figure B10:

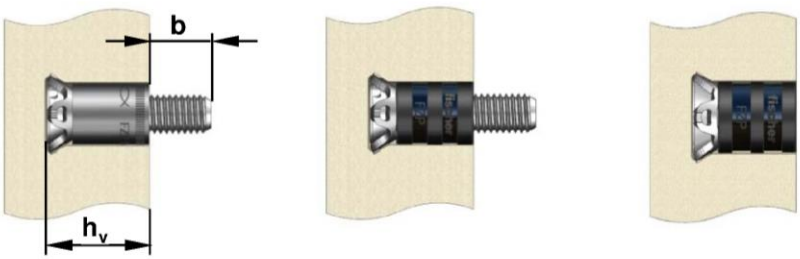

Stand off fixing

Figure B11:

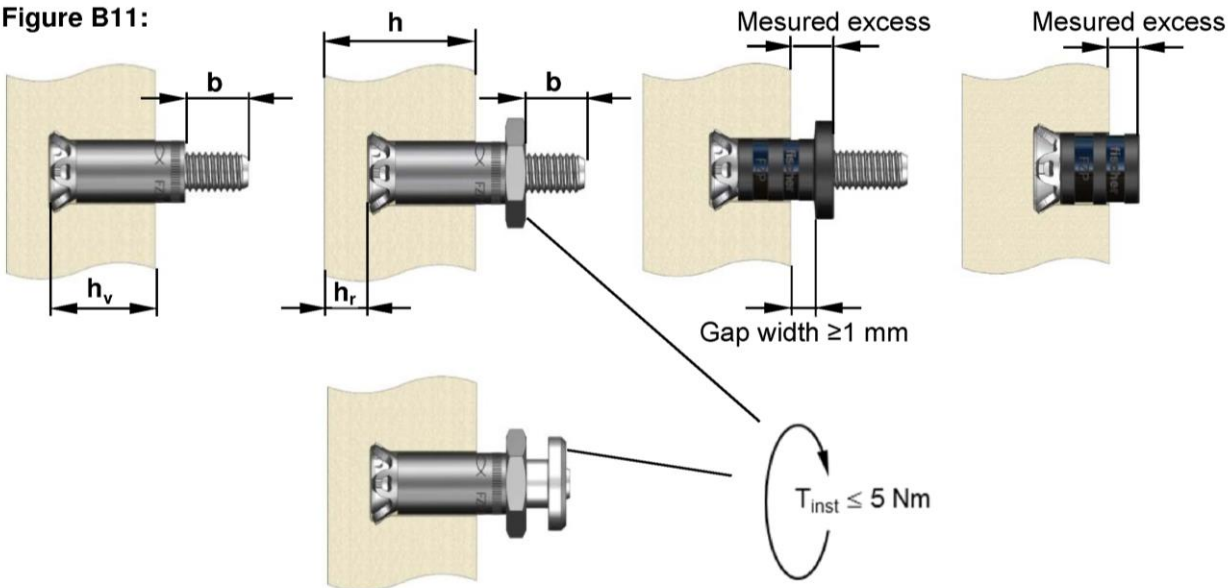

Istallation instructions

Example: Set with SGA

1.)

2.)

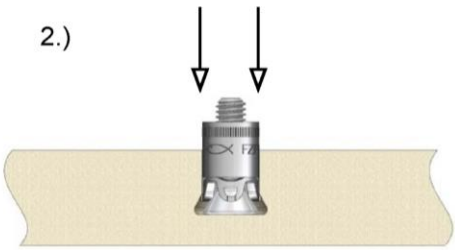

3.)

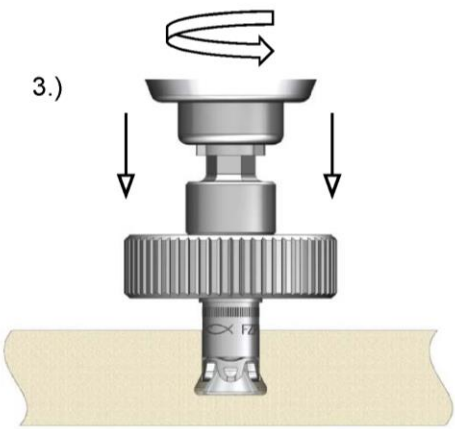

4.)

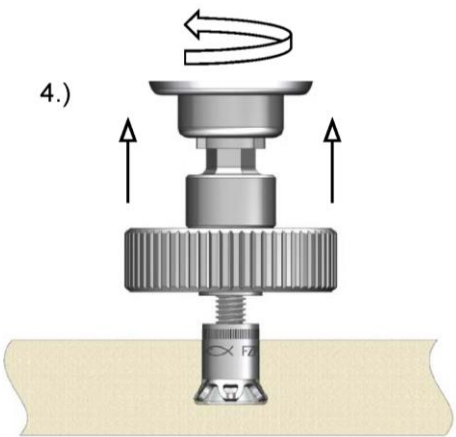

5.1)

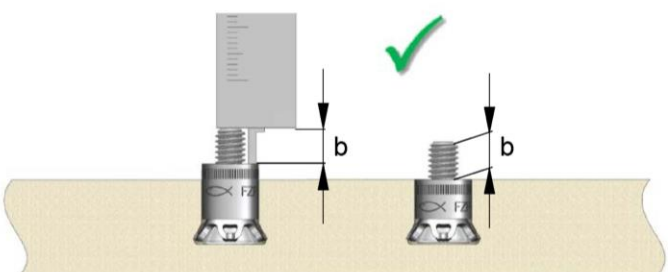

5.2)

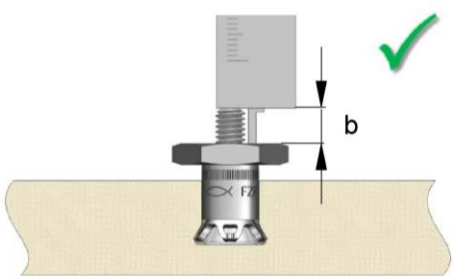

Table C1: Characteristic resistance

Diameter of drill hole	∅ d_0	[mm]	**11** (FZP M6)		**13** (FZP M8 / M6i)	
Designation of natural stone			Padang Cristallo G603	Jura Limestone (yellow)	Padang Cristallo G603	Jura Limestone (yellow)
Country of origin			China	Germany	China	Germany
Petrographic description			Granite	Limestone	Granite	Limestone
Panel thickness	h	[mm]	30	40	30	40
Edge distance	a_r	[mm]	100	100	100	100
Embedment depth	h_s	[mm]	15	17	17	25
Characteristic resistance						
Tension load	N_{Rk} [1) 2)]	[kN]	6,2	4,8	7,8	8,0
Sher load	V_{Rk} [1) 2)]	[kN]	7,8	7,9	7,0	9,1
Partial safety factor	γ_M	[-]	1,8			
Combined tension and shear load						
Trilinear limit value	X	[-]	1,2			

1) Reduction factor α based on stone class is already included in these values. Reduction factor α in accordance with Technical Report 062 "Design of fasteners for façade panels made of natural stone".

2) For other natural stones according to Table B1, the resistance is determined in accordance with EAD 33-0030-0601 and Technical Report "Design of fasteners for façade panels made of natural stone".

Table C2: Characteristic resistance for steel failure

Diameter of drill hole and Anchor	∅ d_0	[mm]	11 FZP M6	13 FZP M8	15 FZP M10	13 [2)] FZP M6i	15 [2)] FZP M8i
Characteristic resistance under tension load	$N_{Rk,s}$	[kN]	15,1	27,5		14,1	
Partial safety factor	γ_{Ms} [1)]	[-]	1,5			1,87	
Characteristic resistance under shear load	$V_{Rk,s}$	[kN]	7,5	13,7		7,0	
Partial safety factor	γ_{Ms} [1)]	[-]	1,25			1,56	

1) In absence of national regulations

2) For the anchor with internal thread only a fixing screw of size M6 or M8 made of stainless steel 1.4401 or 1.4571 EN ISO 10088-3 with a minimum strength class 70 according to EN ISO 3506-1 (fuk = 700 N/mm², fyk = 450 N/mm²) can be used