# ДЕКЛАРАЦИЯ ЗА ЕКСПЛОАТАЦИОННИ ПОКАЗАТЕЛИ

## DoP 0359

за fischer-Zykon-анкер за фасадни панели FZP II T BG

1. Уникален идентификационен код на типа продукт: **DoP 0359**

2. Предвидена употреба/употреби: **Крепеж за фиксиране в задната част на фасадни панели, изработени от керамични плочи съгласно EN 14411:2016, виж Приложението, по-специално Приложения B1 - B6.**

3. Производител: **fischerwerke GmbH & Co. KG, Klaus-Fischer-Str. 1, 72178 Waldachtal, Германия**

4. Упълномощен представител: **–**

5. Система/системи за оценяване и проверка на постоянството на експлоатационните показатели: **2+**

6. Европейски документ за оценяване: **EAD 330030-00-0601, Edition 10/2018**
   Европейска техническа оценка: **ETA-23/0756; 2023-12-08**
   Орган за техническа оценка: **DIBt- Deutsches Institut für Bautechnik**
   Нотифициран орган/органи: **2873 TU Darmstadt**

7. Декларирани експлоатационни показатели:

**Механична устойчивост и здравина (BWR 1)**

Характерна устойчивост на пробив или повреда при изтегляне при натоварване на опън: Приложение C1

Характерна устойчивост на пробив или повреда при изтегляне при натоварване на срез: Приложение C1

Характерна устойчивост на пробив или повреда при изтегляне, при комбинирани натоварвания и натоварване на срез: Приложение C1 Y=NPD; $F_{Rk}$=NPD

Отстояние от ръба и междуосови разстояния: Приложение C1

трайност: Приложения A3, B2

Характерна устойчивост на разрушаване на стоманата при натоварване на опън и срез: Приложение C1

**Пожарна безопасност (BWR 2)**

Реакция на огън: Клас (A1)

8. Подходяща техническа документация и/или специфична техническа документация: **–**

Експлоатационните показатели на продукта, посочени по-горе, са в съответствие с декларираните експлоатационни показатели. Настоящата декларация за експлоатационни показатели се издава в съответствие с Регламент (ЕС) № 305/2011, като отговорността за нея се носи изцяло от посочения по-горе производител.

Подписано за и от името на производителя от:

Dr.-Ing. Oliver Geibig, Управляващ директор Бизнес звена и инженеринг

Jürgen Grün, Управляващ директор Химия и качество

Tumlingen, 2024-04-12

Тази Декларация за съответствие е изготвена на различни езици. В случай, че възникне спор, относно интерпретирането, трябва да се вземе предвид английската версия.

Приложението съдържа доброволна и допълнителна информация на английски език в обем и съдържание, надхвърлящи (независимо от езика) законовите изисквания.

## Specific Part

### 1 Technical description of the product

The fischer-Zykon-panel anchor FZP II T is a special anchor of size M 6 which consists of a cone bolt with external thread, made of stainless steel, an expansion part made of stainless steel, a shim washer made of polyamide and, if need to be, a hexagon nut made of stainless steel or aluminium. The anchor is put into an undercut drill hole in the façade panels and is placed form-fit by driving-in the shim washer or by applying a torque moment to the hexagon nut.

The product description is given in Annex A. The material values, dimensions and tolerances of the components of the fastener not indicated in the annexes shall correspond to the values laid down in the technical documentation.

### 2 Specification of the intended use in accordance with the applicable European Assessment Document

The performances given in Section 3 are only valid if the anchor is used in compliance with the specifications and conditions given in Annex B.

The verifications and assessment methods on which this European Technical Assessment is based lead to the assumption of a working life of the anchors of at least 50 years. The indications given on the working life cannot be interpreted as a guarantee given by the producer, but are to be regarded only as a means for choosing the right products in relation to the expected economically reasonable working life of the works.

### 3 Performance of the product and references to the methods used for its assessment

#### 3.1 Mechanical resistance and stability (BWR 1)

| Essential characteristic | Performance |
|---|---|
| Characteristic resistance to breakout or pull-out failure under tension load | See Annex C 1 |
| Characteristic resistance to breakout or pull-out failure under shear load | See Annex C 1 |
| Characteristic resistance to breakout or pull-out failure under combined tension and shear load | See Annex C 1 |
| Edge distance and spacing | See Annex C 1 |
| Durability | Corrosion Resistance Class (CRC) III in accordance with EN 1993-1-4:2015 |
| Characteristic resistance to steel failure under tension and shear loads | See Annex C 1 |

#### 3.2 Safety in case of fire (BWR 2)

| Essential characteristic | Performance |
|---|---|
| Reaction to fire | Class A1 |

## 4 Assessment and verification of constancy of performance (AVCP) system applied, with reference to its legal base

In accordance with EAD No. 330030-00-0601 the applicable European legal act is: [97/161/EG].

The system to be applied is: 2+

**Installed fastener**

**Figure A1:**

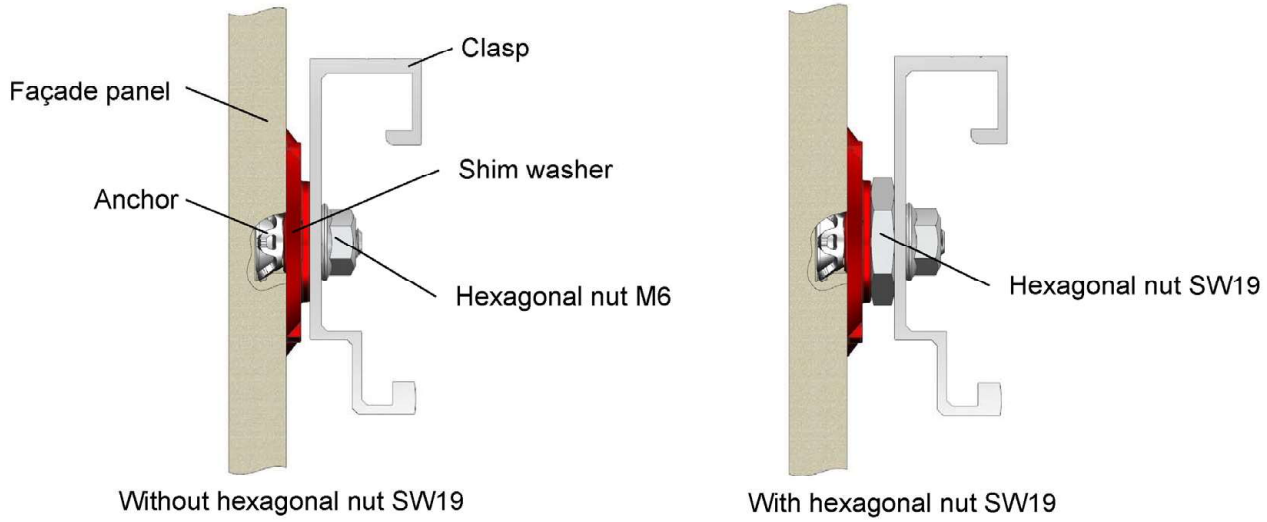


**Example of façade panel on substructure**

**Figure A2:**

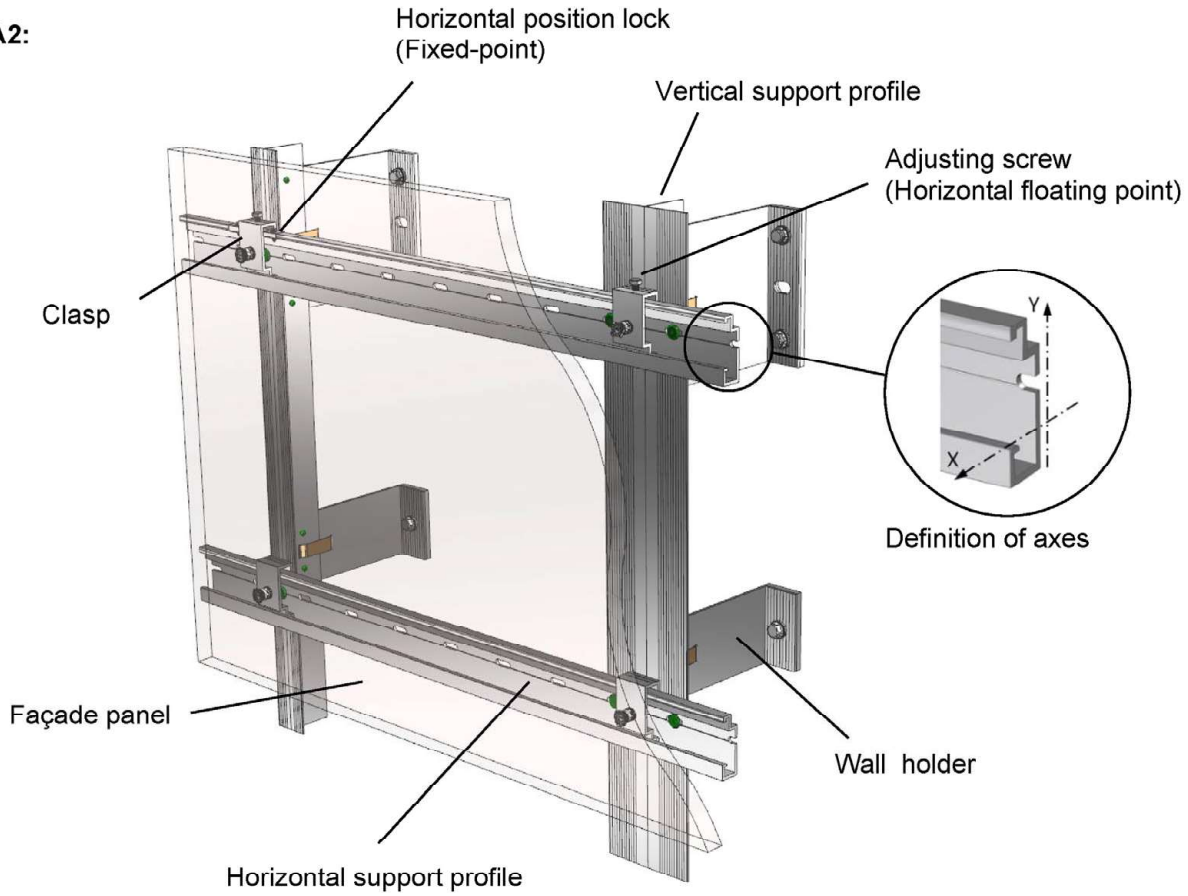

## Type of anchor

### Anchor with external thread M6

**Figure A3:**

Undercut anchor
FZP II - T

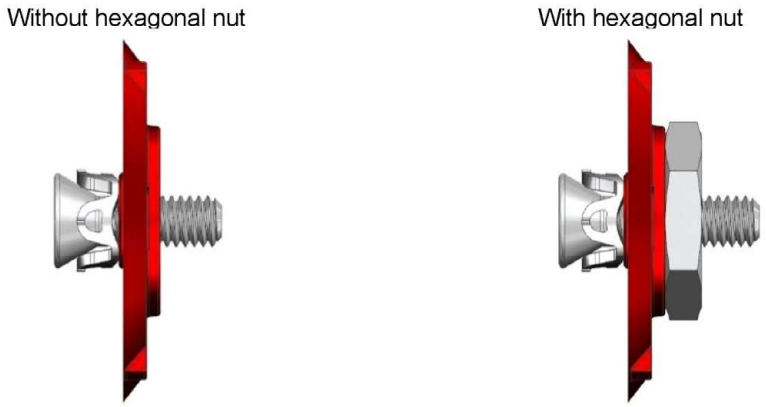


## Type of mounting

**Figure A4:**

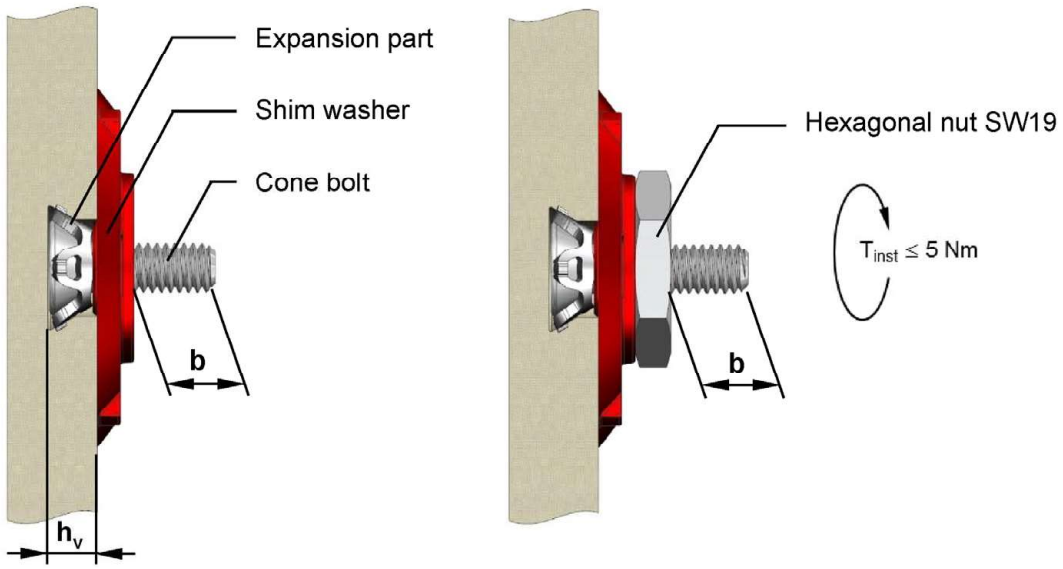


## Designation system

FZP II 11 x 6 M6 / T / 10 D40 PA

- D40 PA — Shim washer made of polyamide (Al = Aluminum hexagonal nut)
- 10 — Free thread length **b** after mounting
- T — **T**hin materials
- M6 — Thread diameter
- 6 — Drill hole depth $\mathbf{h_v}$ ($h_v = h_1 = h_s$ = Embedment depth )
- 11 — Ø cylindrical diameter $\mathbf{d_0}$
- FZP II — **F**ischer **Z**ykon (Cylindrical conical) **P**anel anchor **II**

| | |
|---|---|
| **fischer Zykon panel anchor FZP II T D40 for ceramic tiles according to EN 14411** | **Annex A 2** |
| **Product description**<br>Type of anchor, built-in state and designation system | Appendix 4 / 18 |

## Anchor parts and materials

**Cone bolt external thread M6** (Optional with UNC thread)
**Figure A5:**

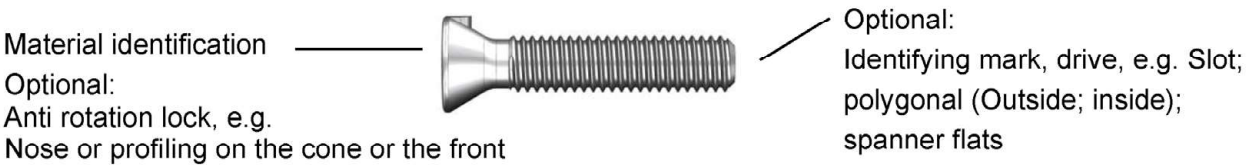


**Expansion part**
For cone bolts with external thread M6
**Figure A6:**

**Shim washer**
For cone bolts with external thread M6
**Figure A7**:

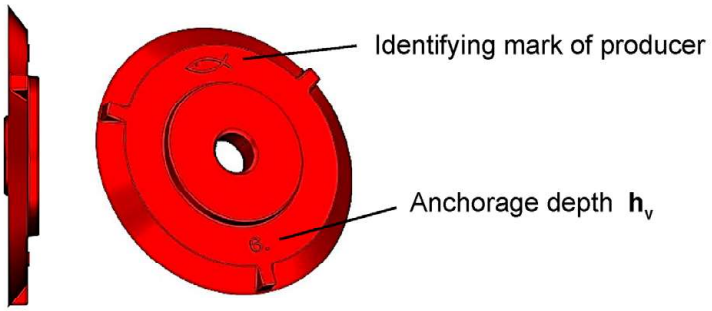


**Hexagonal nut**
For cone bolts with external thread M6
**Figure A8**:

**Table A1: Materials of anchor parts**

| Anchor parts | Material |
|---|---|
| Cone bolt | Stainless steel, EN 10088:2014 |
| Expansion part | Stainless steel, EN 10088:2014 |
| Shim washer | Polyamide 6.6 |
| Hexagonal nut | Aluminium, EN 755:2016<br>Stainless steel, EN 10088:2014 |

**Specifications of intended use**

**Anchorages subject to:**
- Static and quasi-static loads.

**Base materials:**
- The stoneware façade panels shall correspond to the group $BI_a$ according to EN 14411:2016
- The characteristic values of the façade panels correspond Table B1

**Table B1: Characteristic values of the façade panels**

| **Strength class of façade panels** | | | **A** | **B** | **C** |
|---|---|---|---|---|---|
| Bending strength ("visible face" on top) | $\sigma_{u5\%} \geq$ | [N/mm$^2$] | 35 | 40 | 45 |
| Modulus of elasticity | E = | [N/mm$^2$] | 30000 | | |
| Poisson's ratio | v = | [-] | 0,2 | | |
| Specific weight | $\gamma$ = | [kN/m$^3$] | 25,0 | | |
| Panel thickness | h ≥ | [mm] | 10 | | |

**Use conditions (Environmental conditions):**

- In accordance with EN 1993-1-4:2015 corresponding to corrosion resistance class CRC III

**Design:**

Generals:

- Each façade panel is fixed with at least four anchors in a rectangular arrangement via single clasps on the substructure. For panels smaller than 0,3 m² the number of anchors might be reduced to 3, due to the low level of loading. For small fitted pieces, differential or fill- in pieces the number and position of the anchors shall be chosen constructively.
- Edge distances and spacings shall be observed. For small fitted pieces, differential and fill-in pieces the edge distance and spacing shall be chosen constructively.
- The substructure is constructed so that the façade panels are fixed according to Annex D 5 technically strain-free via skids (loose bearings) and one fixed point (fixed bearing) - the fixed point may be placed at the panel edge or in the panel field - and that there are no additional loads acting on the panels and their fixings due to excentric load application / load transfer (symmetrical bearing of the panels).
- If constraining forces are present, they must be taken into account for the design.
- Two fixing points of the façade panel are designed so that they are able to carry the dead load of the façade panel.
- When using clasps on horizontal load-bearing profiles the fixing points situated horizontally at the same height of a façade panel are fastened in each case to the same load-bearing profile.
- Verifiable calculation notes and drawings shall be prepared taking account of the loads to be anchored, the nature and strength of the base materials and the dimensions of the anchorage members as well as of the relevant tolerances. The positions of the anchors are indicated on the design drawings.
- The calculation shall be carried out in a linear elastic manner. The stiffness of the substructure shall be considered for the respective case of application.
- For hanging panels (overhead installation) or reveals respectively the load direction shall be taken into consideration and the combinations of actions shall be based on EN 1990:2002+A1:2005+A1:2005/AC:2010.
- The permissible clasp torsion under service load is 2°.

Further design principles can be found in the informative part of Annex D 1 to D 6.

**Installation:**

- The drillings are done at the factory or on site under workshop conditions; when making drillings on site the execution is supervised by the responsible project supervisor or a skilled representative of the project supervisor.
- Making of the undercut drilling is done with a special drill bit or a special CNC drill bit according to Annex B 4 and a special drilling device in accordance with the information deposited with Deutsches Institut für Bautechnik (DIBt).
- The drilling residues must be removed from the drill hole.
- In case of aborted hole: new drilling at a minimum distance, of 15 mm away from the aborted hole.
- The geometry of the drill hole is checked at least on 5 % of all drillings. Check also when using a new drill bit or the operator changes. The following dimensions shall be checked and documented according to manufacturer's information and testing instructions by means of a control aids according to Annex B 5, Figure B5, B6 and B7.
  - Diameter of the cylindrical drill hole.
  - Diameter of the undercut.
  - Remaining panel thickness (drill hole depth and panel thickness respectively).
- If the tolerance given in Annex B 4, Table B2 is exceeded, the geometry of the drill hole shall be checked on 25 % of the drillings performed. No further drill hole should exceed the tolerances otherwise all drill holes have to be controlled. Drill holes falling below or exceeding the tolerances shall be rejected.

  Note:
  Checking the geometry of drill hole on 5 % of all drillings means that on one of 5 panels (this corresponds to 20 drillings for panels with 4 undercut anchors) one drilling shall be checked. If the tolerances given in Annex B 4, Table B2 are exceeded, the control shall be increased to 25 % of the drillings, i.e. one drilling shall be checked on all the 5 panels.
- The anchors are installed in a deformation controlled manner. For this purpose suitable installation tools per Annex B 5, Figure B4 shall be used. The anchor is set correctly if, bolt projection "b" as per Annex A 2, Figure A4 according Annex B 6, Illustration 5.1 is observed. The dimension "b" is indicated in the anchor designation.
- During transport and storage on site the façade panels are protected from damages; the façade panels are not to be hung up jerkily (if need be lifters shall be used for hanging up the façade panels); façade panels and reveal panels respectively with incipient cracks are not be installed.
- The façade is installed by skilled specialists and the laying instructions of the manufacturer shall be paid attention to.
- The façade panels must not be used for the transmission of impact loads and for the protection against falling.
- Overhead installation is allowed.

**Definition of edge distance and anchor spacing**
**Figure B1:**

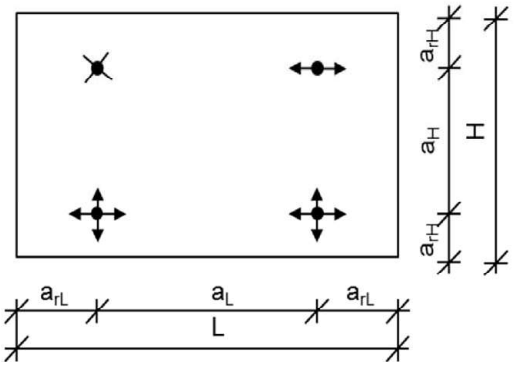


**Legend:**

$a_{rL}$, $a_{rH}$ = Edge distance – anchor distance to the panel edge

$a_L$, $a_H$ = Spacing – Distance between the anchors

L = Length of the panel in horizontal direction

H = Length of the panel in vertical direction

= Fixed bearing (fixed support)

= Horizontal slide bearing (slide support)

= Horizontal and vertical slide bearing (slide support)

**Drill hole geometry**
**Figure B2**

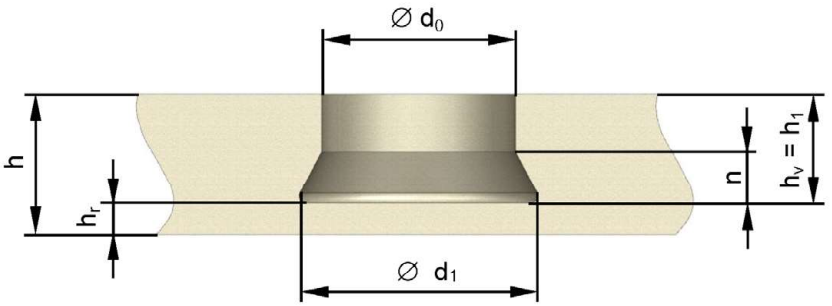


**Drill bits**
**Figure B3:**

Examples:

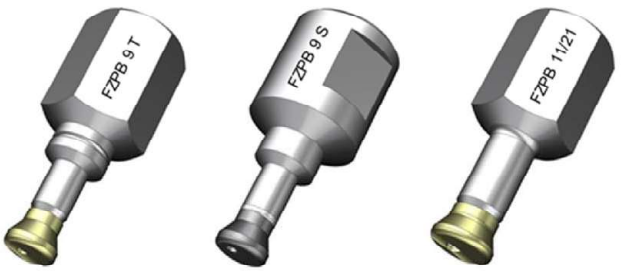


**Table B2: Drill hole dimensions and anchor allocation**

| ∅ $d_0$ | ∅ $d_1$ | $h_v$ | $h_r$ | n |
|---|---|---|---|---|
| 11,2 $^{+0,4}_{-0,2}$ | 13,5 ± 0,3 | $^{+0,4}_{-0,1}$ | ≈ 4 | ≈ 4 |

| Anchor type | | | FZP II 11x6 M6/T | FZP II 11x8 M6/T | FZP II 11x9 M6/T |
|---|---|---|---|---|---|
| Anchorage depth | $h_v$ = | [mm] | 6 | 8 | 9 |
| Panel thickness | $h_{nom}$ ≥ | [mm] | 10 | 12 | 13 |

**fischer Zykon panel anchor FZP II T D40 for ceramic tiles according to EN 14411**

**Intended use**
Installation, drill hole geometry, drill bit and drill hole parameters

**Annex B 4**

**Setting tools**
**Figure B4:**

Manual setting tool SGT

Cordless screwdriver
with setting tool e.g. SGA
or screw socket

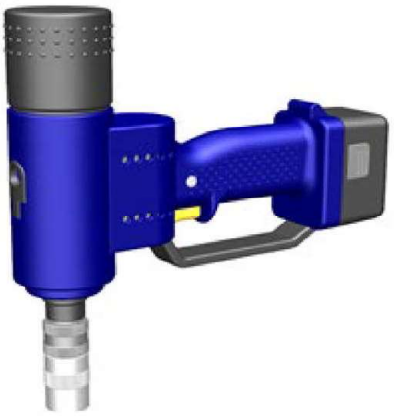

Battery-setting tool SGB

**Means for undercut control Ø $d_1$**
**Figure B5:**

STU (Internal quick test)

Volume gauge

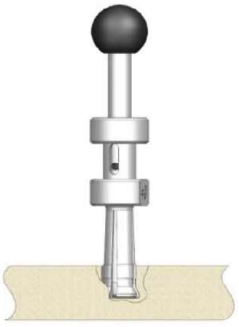

HVL-T (Undercut minimum volume gauge)

**Figure B6:**

Go / noGo gauge for
checking cylindrical drill hole diameter $d_0$

DPL-T (Diameter gauge)

**Means for measuring drill hole depth $h_1$ and drill hole diameter $d_0$**
**Figure B7:**

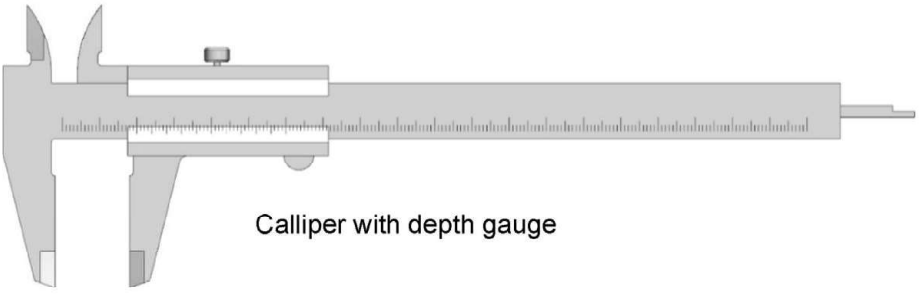

Calliper with depth gauge

**Installation instructions**

Example: Anchor installation with SGA

1.)

2.)

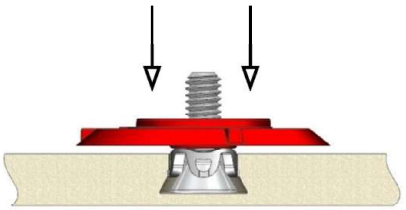

3.)

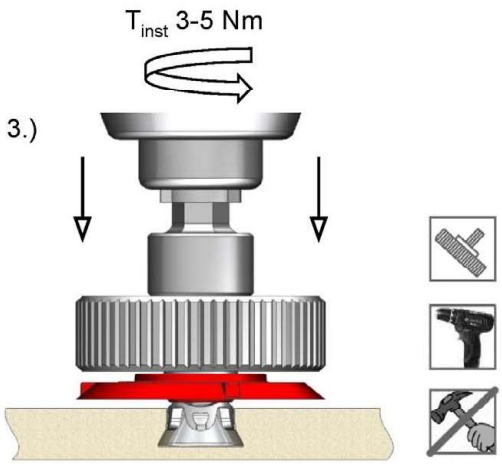


4.)

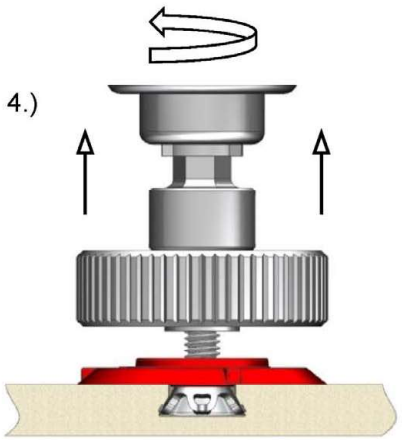

5.1)

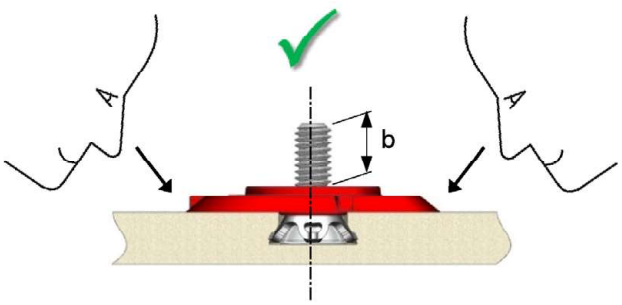


5.2)

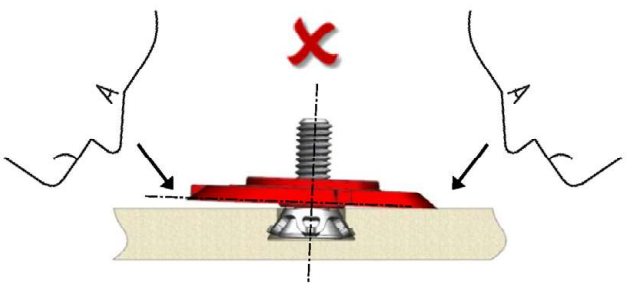

## Characteristic values of anchors and panels

### Table C1: Characteristic values of anchors and panels

| Bending strength class | | | A ; B und C | | |
|---|---|---|---|---|---|
| Nominal panel thickness | $h_{nom} \geq$ | [mm] | 10 | 12 | 13 |
| Anchorage depth | $h_v =$ | [mm] | 6 | 8 | 9 |
| Characteristic tension load [2)] | $N_{Rk} =$ | [kN] | 1,8 | 3,1 | 3,5 |
| Characteristic shear load [2)] | $V_{Rk} =$ | [kN] | 3,0 | 3,6 | 3,8 |
| Edge distance [3)] | $a_r \geq$ | [mm] | 50 | | |
| Spacing [3)] | $a \geq$ | [mm] | 100 | | |
| Partial safety factor [1)] | $\gamma_M =$ | [-] | 1,8 | | |
| Value for tri-linear function with combined tension- and shear load | x = | [-] | 1,0 | | |

1) In absence of other national regulations.
2) For interaction of tension and shear load Annex D 4 equation (3) is decisive.
3) For small fitted pieces, differential or fill-in pieces the minimum edge distance or spacing shall be chosen constructively.

### Table C2: Characteristic resistance for steel failure

| Type of Anchor | | | FZP II 11 M6/T |
|---|---|---|---|
| Characteristic resistance under tension load [2)] | $N_{Rk,s} =$ | [kN] | 11,10 |
| Partial safety factor [1)] | $\gamma_{Ms} =$ | [-] | 1,89 |
| Characteristic resistance under shear load [2)] | $V_{Rk,s} =$ | [kN] | 5,53 |
| Partial safety factor [1)] | $\gamma_{Ms} =$ | [-] | 1,57 |

1) In absence of national regulations
2) Without strain hardening of the cone bolt and minimum tensile strength of 550 N/mm$^2$

**Design method**

Additional:

The design values of the actions shall be calculated on basis of EN 1990:2002+A1:2005+A1:2005/AC:2010 in consideration of the existing loads. The combinations of actions shall be equal to EN 1990:2002+A1:2005+A1:2005/AC:2010. The actions shall be specified according to EN 1991-1 to 4:2005 + A1:2010 + AC:2010. Corresponding national regulations shall be taken into consideration. The unfavourable combination is decisive. Where necessary for the design of the anchor and the façade panel several combinations shall be analysed separately.

The typical fundamental combination for façade panels considers actions from dead load $F_{Ek.G}$ (permanent action) and wind $F_{Ek.w}$ (leading variable action).

According to EN 1990:2002+A1:2005+A1:2005/AC:2010 the following fundamental combination depending on the load direction results for a vertical façade panel:

Fundamental combination for loads parallel to the panel: $F_{Ed||} = F_{Ek.G} \cdot \gamma_G$

Fundamental combination for loads perpendicular to the panel: $F_{Ed\perp} = F_{Ek.w} \cdot \gamma_Q$

with $\gamma_G = 1{,}35$; $\gamma_Q = 1{,}50$

For hanging panels (over head mounting) or reveals respectively the load direction shall be taken into consideration and the combinations of actions shall be based on EN 1990:2002+A1:2005+A1:2005/AC:2010.

The calculation shall be carried out in a linear elastic manner. The stiffness of the substructure shall be considered for the respective case of application. The design value of the actions shall be compared with the design values of the resistance.

Design of the anchor and the façade panels is carried out according to the design method in accordance with Annex B 2 and D 1 to D 6.

The characteristic wind loads for selective panel sizes and bearing conditions given in Annex D 3, Table D1 only apply, if the substructure (horizontal and vertical profiles) and their fixings are arranged symmetrically.

**Verification of the anchor loads**

For the determined anchor forces it shall be verified that the equation (1) and (2) are fulfilled. For combined tension and shear forces additional equation (3) has to be fulfilled.

Tension / compression load: $\frac{N_{Ed}}{N_{Rd}} \leq 1{,}0$ **(1)**

Shear load: $\frac{V_{Ed}}{V_{Rd}} \leq 1{,}0$ **(2)**

interaction oblique tension: $\frac{N_{Ed}}{N_{Rd}} + \frac{V_{Ed}}{V_{Rd}} \leq 1{,}0$ **(3)**

with:

$N_{Ed}$ = design value of existing anchor tension load

$V_{Ed}$ = design value of existing anchor shear load

$N_{Rd}$ = design value of anchor load-bearing capacity for tension load: $N_{Rd} = \frac{N_{Rk}}{\gamma_M}$

$V_{Rd}$ = design value of anchor load-bearing capacity for shear load: $V_{Rd} = \frac{V_{Rk}}{\gamma_M}$

$N_{Rk}$ = characteristic resistance tension (Annex C 1)

$V_{Rk}$ = characteristic resistance shear (Annex C 1)

$\gamma_M$ = partial safety factor (Annex C 1)

**Verification of the bending stresses**

For the determined bending stresses it shall be verified, that the following equation is met:

$\sigma_{Ed} \leq \sigma_{Rd}$ **(4)**

with:

$\sigma_{Ed}$ = design value of existing bending stress in the façade panel

$\sigma_{Rd}$ = design value of bending strength: $\sigma_{Rd} = \frac{\sigma_{Rk}}{\gamma_M}$

$\sigma_{Rk}$ = characteristic design value of bending strength

**Characteristic wind loads for selective panel sizes and bearing conditions**

In Annex D 3 Table D1 several panel systems are listed as a function of the panel slab thickness, the anchorage depth, the edge distance, the panel size, the number of clasps and the kind of support.
The prove of structural stability is fulfilled if the characteristic wind load $w_{Ek}$ does not exceed the values of $w_{Ek,Tab}$ in Table D1. In addition, precise engineering calculations can also be carried out.

$w_{Ek} \leq w_{Ek,Tab}$

with:

$w_{Ek}$ = characteristic wind load

$w_{Ek,Tab}$ = Table value of characteristic wind loads

**Table D1: Characteristic wind loads**

| System | h ≥ [mm] | $h_s$ = [mm] | $a_{rx,1}$ $a_{ry,2}$ [mm] | $a_{ry,1}$ $a_{rx,2}$ [mm] | Panel length/width [mm] | Agraffes | Kind of supports according Annex D 5 | Strength class A: Characteristic wind load $W_{Ek,Tab}$ [kN/m²] | Strength class B: Characteristic wind load $W_{Ek,Tab}$ [kN/m²] | Strength class C: Characteristic wind load $W_{Ek,Tab}$ [kN/m²] |
|---|---|---|---|---|---|---|---|---|---|---|
| 1 | 10 | 6 | 50-150 | 50-150 | 600x600 | 4 | Figure 5 | 3,5 | 3,9 | 4,4 |
| | 12 | 8 | | | | | | 5,0 | 5,7 | 6,4 |
| | 13 | 9 | | | | | | 5,8 | 6,7 | 7,5 |
| 2 | 10 | 6 | 50-150 | 50-200 | 600x900 | 4 | Figure 5 | 2,1 | 2,4 | 2,7 |
| | 12 | 8 | | | | | | 3,1 | 3,5 | 3,9 |
| | 13 | 9 | | | | | | 3,6 | 4,1 | 4,6 |
| 3 | 10 | 6 | 50-150 | 100-250 | 600x1200 | 4 | Figure 5 | 1,5 | 1,7 | 1,9 |
| | 12 | 8 | | | | | | 2,1 | 2,4 | 2,8 |
| | 13 | 9 | | | | | | 2,5 | 2,9 | 3,2 |
| 4 | 10 | 6 | 50-200 | 50-200 | 750x750 | 4 | Figure 5 | 1,9 | 2,2 | 2,5 |
| | 12 | 8 | | | | | | 2,8 | 3,2 | 3,6 |
| | 13 | 9 | | | | | | 3,3 | 3,7 | 4,2 |
| 5 | 10 | 6 | 100-200 | 100-200 | 900x900 | 4 | Figure 5 | 1,6 | 1,8 | 2,0 |
| | 12 | 8 | | | | | | 2,3 | 2,6 | 2,9 |
| | 13 | 9 | | | | | | 2,7 | 3,0 | 3,4 |
| 6 | 10 | 6 | 100-225 | 150-250 | 900x1200 | 4 | Figure 5 | 1,1 | 1,3 | 1,4 |
| | 12 | 8 | | | | | | 1,6 | 1,8 | 2,1 |
| | 13 | 9 | | | | | | 1,9 | 2,1 | 2,4 |
| 7 | 10 | 6 | 100-200 | 100-200 | 1000x1000 | 4 | Figure 5 | 1,3 | 1,5 | 1,6 |
| | 12 | 8 | | | | | | 1,8 | 2,1 | 2,4 |
| | 13 | 9 | | | | | | 2,2 | 2,5 | 2,8 |
| 8 | 10 | 6 | 100-250 | 100-250 | 1200x1200 | 4 | Figure 5 | 0,8 | 0,9 | 1,0 |
| | 12 | 8 | | | | | | 1,2 | 1,3 | 1,5 |
| | 13 | 9 | | | | | | 1,4 | 1,6 | 1,8 |
| 9 | 10 | 6 | 50-100 | 125-150 | 600x1200 | 6[1)] | Figure 6 and 7 | 1,8 | 2,0 | 2,3 |
| | 12 | 8 | | | | | | 2,6 | 2,9 | 3,3 |
| | 13 | 9 | | | | | | 3,0 | 3,4 | 3,9 |
| 10 | 10 | 6 | 150-200 | 125-175 | 900x1200 | 6[1)] | Figure 6 and 7 | 1,2 | 1,4 | 1,6 |
| | 12 | 8 | | | | | | 1,8 | 2,0 | 2,3 |
| | 13 | 9 | | | | | | 2,1 | 2,4 | 2,7 |
| 11 | 10 | 6 | 150-200 | 100-150 | 1000x1000 | 6[1)] | Figure 6 and 7 | 1,4 | 1,6 | 1,8 |
| | 12 | 8 | | | | | | 2,1 | 2,3 | 2,6 |
| | 13 | 9 | | | | | | 2,4 | 2,7 | 3,1 |
| 12 | 10 | 6 | 200-250 | 150-200 | 1200x1200 | 6[1)] | Figure 6 and 7 | 1,0 | 1,2 | 1,3 |
| | 12 | 8 | | | | | | 1,5 | 1,7 | 1,9 |
| | 13 | 9 | | | | | | 1,7 | 2,0 | 2,3 |

[1)] - The subframe has to be symmetrical.
For further constructional requirements refer to Annex D 4, Figure 1-4.

- The moment of inertia of profiles, supporting three fixing points of a panel, must be minimum
$I_Y$ [cm$^4$] = 26,1 • $L_i$ [m] – 19,4.

  valid for: $0,75 \leq L_i \leq 1,4$ $L_i$ : equivalent support width (Annex D 4, Figure 4)

  $I_y$ : The moment of inertia of profiles, in direction parallel to the façade panel layer.
  (resistance normal to the façade panel layer – see Annex A 1)

  The modules of elasticity of the profiles must be E ≥ 70000 N/mm².

- In addition, precise object-related dimensioning can also be carried out, resulting in other panel formats and anchor spacings.

## Maximum support spacing and location of the subframe fixings

Caption:

① = Panel
② = Fixing point
③ = Profile
④ = Support location

Figure 1

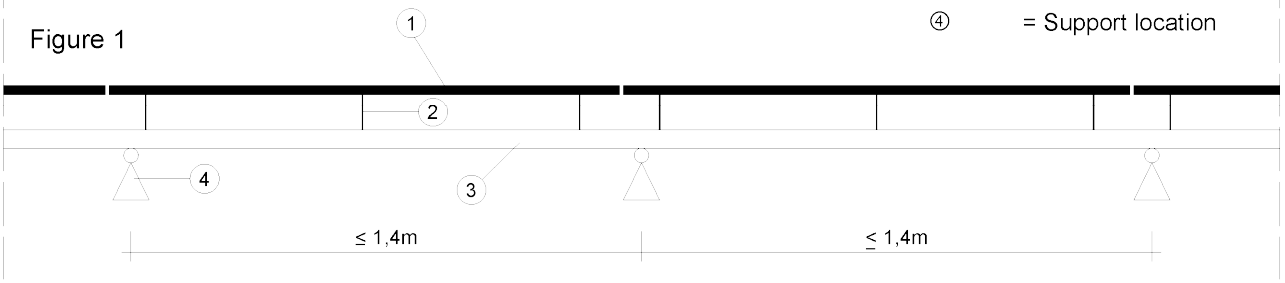


- Profiles, supporting three fixing points of a panel, have a maximum spacing of the supports of 1,4 m (see Figure 1)

Figure 2

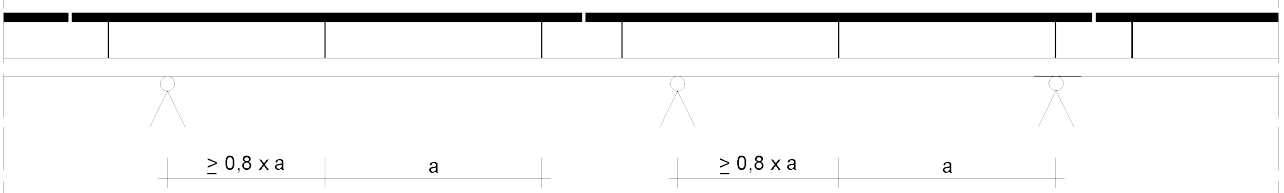


Figure 3

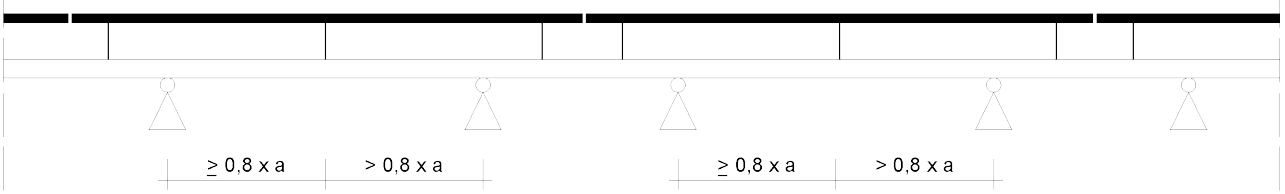


- In profiles, supporting three fixing points of a panel, the central fixing points must have a minimum distance of 0,8 • a to the supports.
  Whereby “a” is the spacing of the fixing points of the panel

Figure 4: Equivalent support spacing

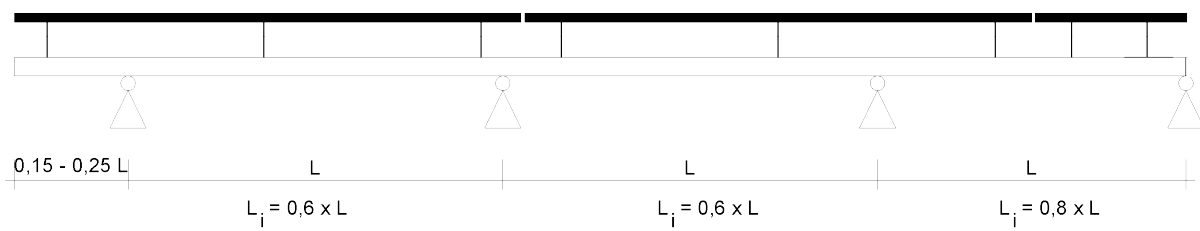

## Supports – Definition of edge distances and spacing

Figure 5

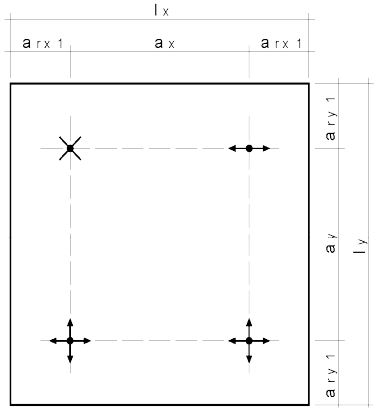


Figure 6

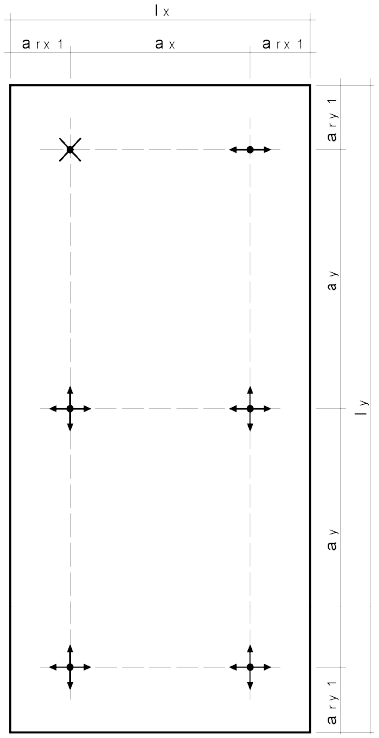


Figure 7

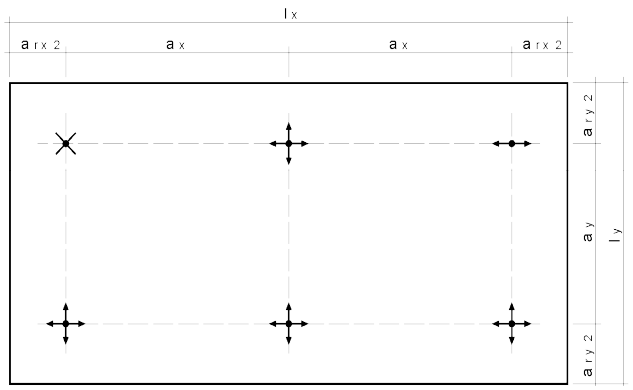


Caption:

| | | |
|---|---|---|
| $a_{rx}$, $a_{ry}$ | = | Edge distance – anchor distance to the panel edge |
| $a_x$, $a_y$ | = | Spacing – Distance between the anchors |
| $l_x$ | = | Length of the panel in horizontal direction |
| $l_y$ | = | Length of the panel in vertical direction |
| | = | Fixed bearing (fixed support) |
| | = | Horizontal slide bearing (slide support) |
| | = | Horizontal and vertical slide bearing (slide support) |

**Guideline for structural calculation by means of FE - method**

For structural calculation by means of the Finite-Element-Method the façade panels are to be idealized with their effective dimensions (size and thickness) as panel elements; the system chosen shall have the capacity to sufficiently precise represent the tension and the deformation state as well as the support reactions of the façade panels. The mesh size at fixing range shall not exceed 10 mm.

The modelling of the façade panel is to be calibrated on the basis of the following points:

- modelling a panel section of 580 mm x 300 mm with a panel thickness of 12 mm
- support at the short sides with rotable restraint
- loading at centre with a single load of 1,17 kN
- determination of a factor $f_{cal.FE} = 58{,}8 / \sigma_{FE}$
- the determined bending stresses shall be multiplied with factor $f_{cal.FE}$ ($\sigma_{Ek} = \sigma_{FE} \cdot f_{cal.FE}$); the factor $f_{cal.FE}$ shall only be considered for stresses due to support moments.
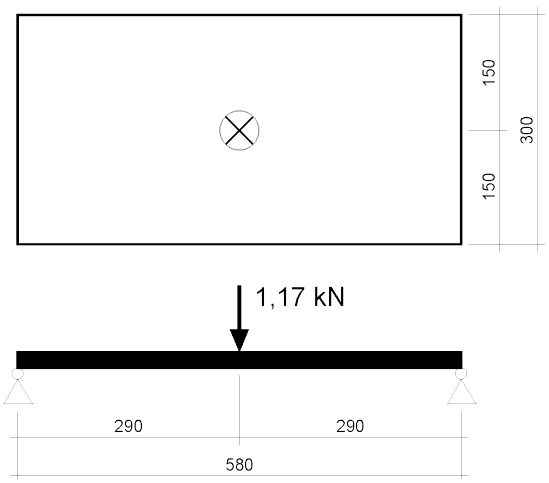
  $\sigma_{FE}$ = maximum of main tensile stress [N/mm²]