ДЕКЛАРАЦИЯ ЗА ЕКСПЛОАТАЦИОННИ ПОКАЗАТЕЛИ

DoP 0330

за fischer-Zykon-анкер за фасадни панели FZP II T (for LAMINAM) BG

1. Уникален идентификационен код на типа продукт: **DoP 0330**

2. Предвидена употреба/употреби: **Крепеж за фиксиране в задната част на фасадни панели, изработени от керамични плочи "LAMINAM" съгласно EN 14411:2016, виж Приложението, по-специално Приложения B1 - B6.**

3. Производител: **fischerwerke GmbH & Co. KG, Klaus-Fischer-Str. 1, 72178 Waldachtal, Германия**

4. Упълномощен представител: **–**

5. Система/системи за оценяване и проверка на постоянството на експлоатационните показатели: **2+**

6. Европейски документ за оценяване: **EAD 330030-00-0601**
   Европейска техническа оценка: **ETA-22/0669; 2022-12-19**
   Орган за техническа оценка: **DIBt- Deutsches Institut für Bautechnik**
   Нотифициран орган/органи: **2873 TU Darmstadt**

7. Декларирани експлоатационни показатели:

Механична устойчивост и здравина (BWR 1)

Характерна устойчивост на пробив или повреда при изтегляне при натоварване на опън: Приложение C1

Характерна устойчивост на пробив или повреда при изтегляне при натоварване на срез: Приложение C1

Характерна устойчивост на пробив или повреда при изтегляне, при комбинирани натоварвания и натоварване на срез: Приложение C1 Y=NPD; F_{Rk}=NPD

Отстояние от ръба и междуосови разстояния: Приложения B3, C1

трайност: Приложение B1

Характерна устойчивост на разрушаване на стоманата при натоварване на опън и срез: Приложение C1

Пожарна безопасност (BWR 2)

Реакция на огън: Клас (A1)

8. Подходяща техническа документация и/или специфична техническа документация: **–**

Експлоатационните показатели на продукта, посочени по-горе, са в съответствие с декларираните експлоатационни показатели. Настоящата декларация за експлоатационни показатели се издава в съответствие с Регламент (ЕС) № 305/2011, като отговорността за нея се носи изцяло от посочения по-горе производител.

Подписано за и от името на производителя от:

Dr.-Ing. Oliver Geibig, Управляващ директор Бизнес звена и инженеринг

Jürgen Grün, Управляващ директор Химия и качество

Tumlingen, 2023-01-17

Тази Декларация за съответствие е изготвена на различни езици. В случай, че възникне спор, относно интерпретирането, трябва да се вземе предвид английската версия.

Приложението съдържа доброволна и допълнителна информация на английски език в обем и съдържание, надхвърлящи (независимо от езика) законовите изисквания.

Specific Part

1 Technical description of the product

The fischer-Zykon-panel anchor FZP II T is a special anchor of size M 6 which consists of a cone bolt with external thread, made of stainless steel, an expansion part made of stainless steel, a shim washer made of polyamide and, if need to be, a hexagon nut made of stainless steel or aluminium. The anchor is put into an undercut drill hole in the façade panels and is placed form-fit by driving-in the shim washer or by applying a torque moment to the hexagon nut.

The product description is given in Annex A. The material values, dimensions and tolerances of the components of the fastener not indicated in the annexes shall correspond to the values laid down in the technical documentation.

2 Specification of the intended use in accordance with the applicable European Assessment Document

The performances given in Section 3 are only valid if the fastener is used in compliance with the specifications and conditions given in Annex B.

The verifications and assessment methods on which this European Technical Assessment is based lead to the assumption of a working life of the fasteners of at least 50 years. The indications given on the working life cannot be interpreted as a guarantee given by the producer, but are to be regarded only as a means for choosing the right products in relation to the expected economically reasonable working life of the works.

3 Performance of the product and references to the methods used for its assessment

3.1 Mechanical resistance and stability (BWR 1)

Essential characteristic	Performance
Characteristic resistance to breakout or pull-out failure under tension load	See Annex C 1
Characteristic resistance to breakout or pull-out failure under shear load	See Annex C 1
Characteristic resistance to breakout or pull-out failure under combined tension and shear load	See Annex C 1
Edge distance and spacing	See Annex C 1
Durability	Corrosion Resistance Class (CRC) III in accordance with EN 1993-1-4:2015
Characteristic resistance to steel failure under tension and shear loads	See Annex C 1

3.2 Safety in case of fire (BWR 2)

Essential characteristic	Performance
Reaction to fire	Class A1

4 Assessment and verification of constancy of performance (AVCP) system applied, with reference to its legal base

In accordance with EAD No. 330030-00-0601 the applicable European legal act is: [97/161/EG].
The system to be applied is: 2+

Installed fastener

Figure A1:

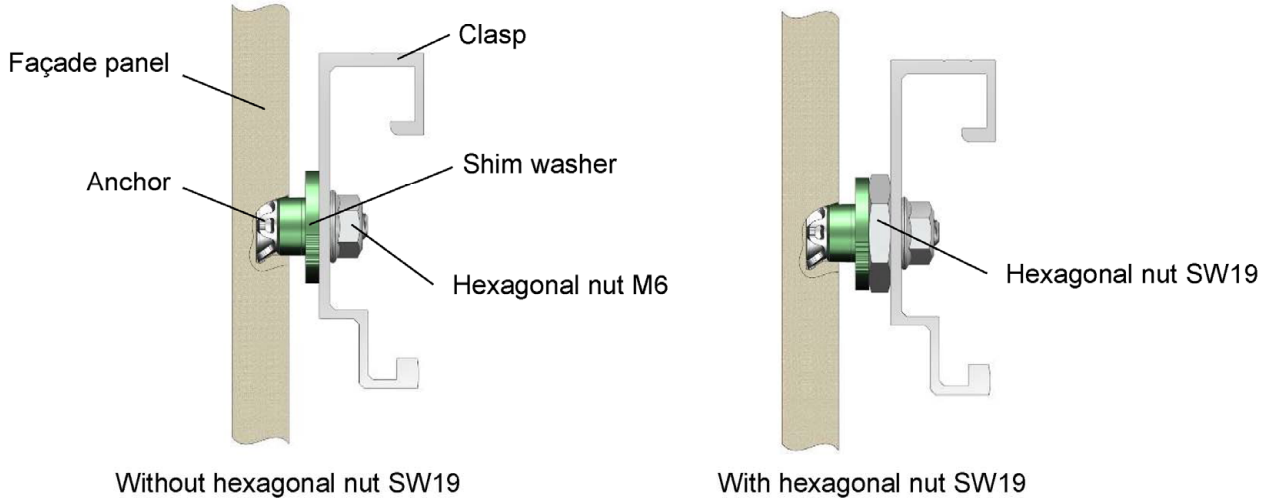

Example of façade panel on substructure

Figure A2:

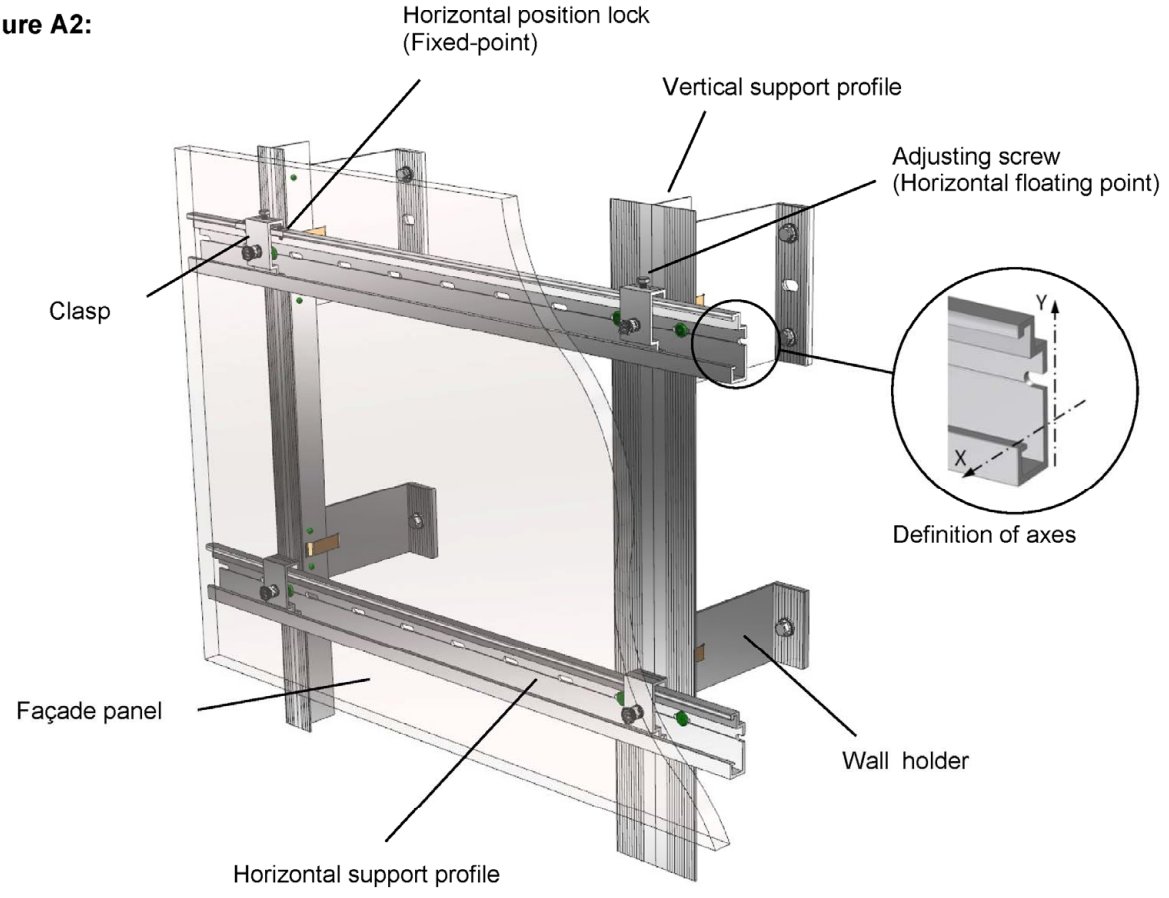

fischer Zykon Plattenanker FZP II T for "LAMINAM ceramic"	**Annex A 1**
Product description Installed anchoring and fixing example	Appendix 3 / 12

Type of anchor

Anchor with external thread M6

Figure A3:

Without hexagonal nut | With hexagonal nut

Undercut anchor
FZP II - T

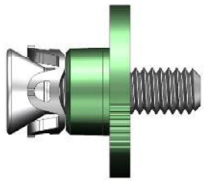

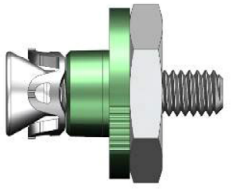

Type of mounting

Figure A4:

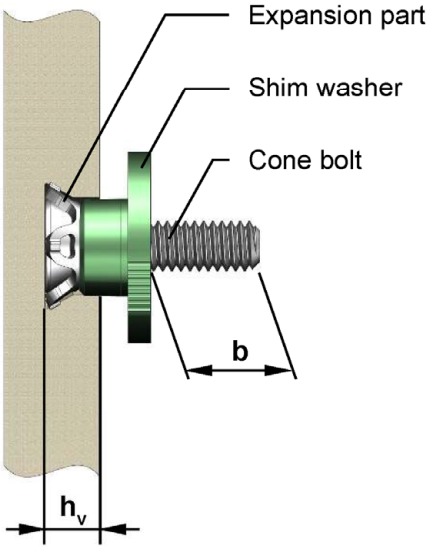

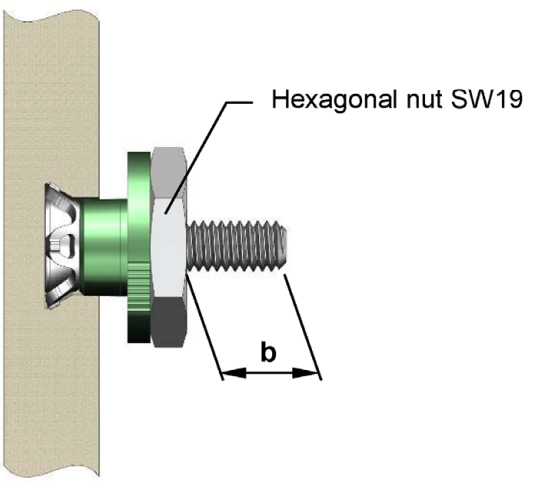

Designation system

FZP II 11 x 10 M6 / T / 9 PA

- PA — Shim washer made of polyamide (Al = with aluminum hex nut)
- 9 — Free thread length **b** after mounting
- T — **T**hin materials
- M6 — Thread diameter
- 10 — Maximum Drill hole depth $\mathbf{h_v}$ (Laminam $h_v = h - h_r$)
- 11 — Ø Cylindrical drill hole $\mathbf{d_0}$
- FZP II — **F**ischer **Z**ykon (Cylindrical conical) **P**anel anchor **II**

fischer Zykon Plattenanker FZP II T for "LAMINAM ceramic"	**Annex A 2**
Product description Type of anchor, built-in state and designation system	Appendix 4 / 12

Anchor parts and materials

Cone bolt external thread M6 (Optional with UNC thread)
Figure A5:

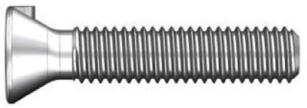

Expansion part
For cone bolts with external thread M6
Figure A6:

Shim washer
For cone bolts with external thread M6
Figure A7:

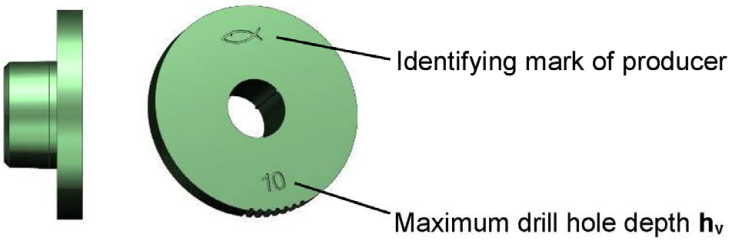

Hexagonal nut
For cone bolts with external thread M6
Figure A8:

Table A1: Materials of anchor parts

Anchor parts	Material
Cone bolt	Stainless steel, EN 10088 :2014
Expansion part	Stainless steel, EN 10088 :2014
Shim washer	Polyamide 6.6
Hexagonal nut	Aluminum, EN 755:2016 Stainless steel, EN 10088 :2014

Specifications of intended use

Anchorages subject to:

- Static and quasi-static loads.

Base materials:

- Laminam façade panels in accordance with EN 14411:2016 "Ceramic tiles – definition, classification, characteristics, assessment and verification of constancy of performance and marking" group BI_a.
- The characteristic values of the façade panels correspond Table B1.

Table B1: Characteristic values of façade panels – geometrical and physical properties

Trade name			**Laminam 12+**
Country of origin			Italy
Maximum panel size	L x H or H x L	[mm]	1620 x 3240
Nominal panel thickness	h_{nom} =	[mm]	12,5
Panel thickness (minimum)	h_{min} =	[mm]	10,5
Panel thickness (maximum)	h_{max} =	[mm]	12,5
Dead load	g_k =	[Kg/m^2]	30
Density – dry [1)]	$\rho \geq$	[g/cm^3]	> 2,2
Modulus of elastic	E_{mean} =	[N/mm²]	50.000
Poisson ratio	ν =	[-]	0,21
Coefficient of thermal expansion	α_T =	[$10^{-6}K^{-1}$]	6,6
Characteristic bending strength	$\sigma_{5\%}$ =	[N/mm²]	39,9

[1)] In absence of other national regulations

Use condition:

- According to the corrosion resistance class (CRC) according to EN 1993-1-4:2015 (ETA Section 3.1)
-

Design:

- The design of anchorages under static and quasistatic load is carried out in accordance with the specifications of the façade panel manufacturer.
- The façade panels, their fixings as well as the substructure including its connection to wall brackets and their connection to the construction works are designed for the respective case of application under the responsibility of an engineer skilled in the field of façade construction.
- Verifiable calculation notes and drawings shall be prepared taking account of the loads to be anchored, the nature and strength of the base materials and the dimensions of the anchorage members as well as of the relevant tolerances. The position of the anchor is indicated on the design drawings.
- Each façade panel is fixed with at least four anchors in a rectangular arrangement via single clasps or panel support profiles on the substructure.
- Edge distance and spacing shall be observed. For small panels, differential and fitted pieces, the edge and axial spacing shall be chosen constructively.
- The substructure is constructed such that the façade panels are fixed technically strain-free via sliding points (loose bearings) and one fixed point (fixed bearing). The fixed point may be placed at the panel edge or in the panel field.
- Two fixing points of the façade panel are designed such that they are able to carry the dead load of the façade panel.
- When using clasps on horizontal support profiles, the horizontal fixing points of a facade panel at the same height must each be fixed to the same support profile.
- The permissible clasp torsion under service load is 2°.

Installation:

- The drillings are done at the factory or on site under workshop conditions; when making drillings on site the execution is supervised by the responsible project supervisor or a skilled representative of the project supervisor.
- Making of the undercut drilling is done with a special drill bit or a special CNC drill bit according to Annex B 4 and a special drilling device in accordance with the information deposited with Deutsches Institut für Bautechnik (DIBt).
- The drilling residues are removed from the drill hole.
- In case of aborted hole: new drilling at a minimum distance, of 15 mm away from the aborted hole.
- The geometry of the drill hole is checked at least on 5 % of all drillings. Check also when using a new drill bit or the operator changes. The following dimensions shall be checked and documented according to manufacturer's information and testing instructions by means of a control aids according to Annex B 5, Figure B5, B6 and B7.
  - Diameter of the cylindrical drill hole.
  - Diameter of the undercut.
  - Remaining panel thickness (drill hole depth and panel thickness respectively).
- If the tolerance given in Annex B 4, Table B2 is exceeded, the geometry of the drill hole shall be checked on 25 % of the drillings performed. No further drill hole should exceed the tolerances otherwise all drill holes have to be controlled. Drill holes falling below or exceeding the tolerances shall be rejected.

  Note: Checking the geometry of drill hole on 5 % of all drillings means that on one of 5 panels (this corresponds to 20 drillings for panels with 4 undercut anchors) one drilling shall be checked. If the tolerances given in Annex B 4, Table B2 are exceeded, the control shall be increased to 25 % of the drillings, i.e. one drilling shall be checked on all the 5 panels.

- The anchors are installed in a deformation controlled manner. For this purpose suitable installation tools per Annex B 5, Figure B4 shall be used. The anchor is set correctly if, bolt projection "b" as per Annex A 2, Figure B4 or Annex B 6, Illustration 5.1 and 6 is observed. The dimension "b" is indicated in the anchor designation.
- During transport and storage on site the façade panels are protected from damages; the façade panels are not to be hung up jerkily (if need be lifters shall be used for hanging up the façade panels); façade panels and reveal panels respectively with incipient cracks are not be installed.
- The façade panels are arranged in a "reclined" or "upright" position.
- The façade are installed by skilled specialists and the laying instructions of the manufacturer shall be paid attention to.
- The façade panels must not be used for the transmission of impact loads and for the protection against falling.
- Overhead installation is allowed

Figure B1: Definition of edge distance and anchor spacing

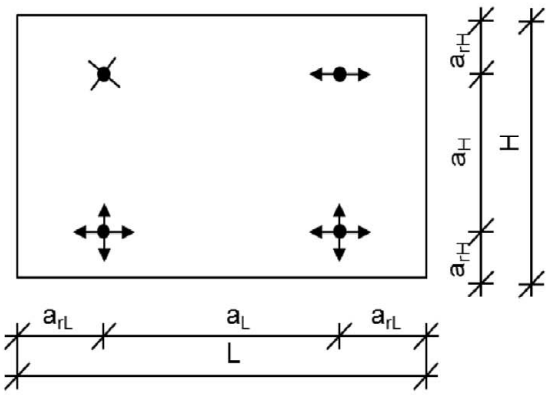

Legend:

a_{rL}, a_{rH} = Edge distance – anchor distance to the panel edge

a_L, a_H = Spacing – Distance between the anchors

L = Length of the panel in horizontal direction

H = Length of the panel in vertical direction

= Fixed bearing (fixed support)

= Horizontal slide bearing (slide support)

= Horizontal and vertical slide bearing (slide support)

Drill hole geometry
Figure B2:

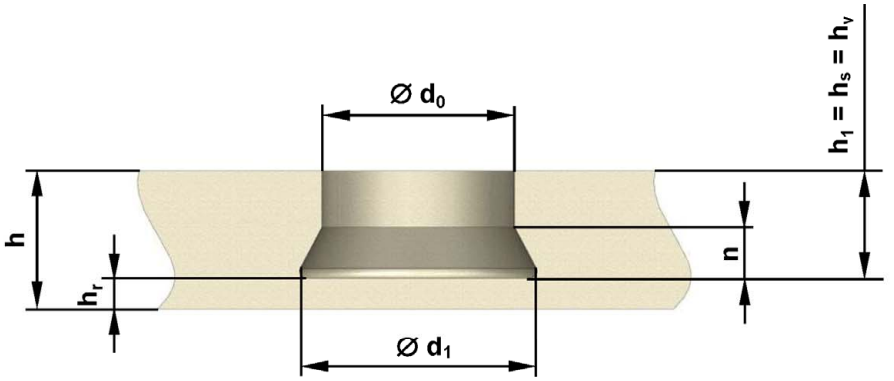

Drill bits
Figure B3:

Examples:

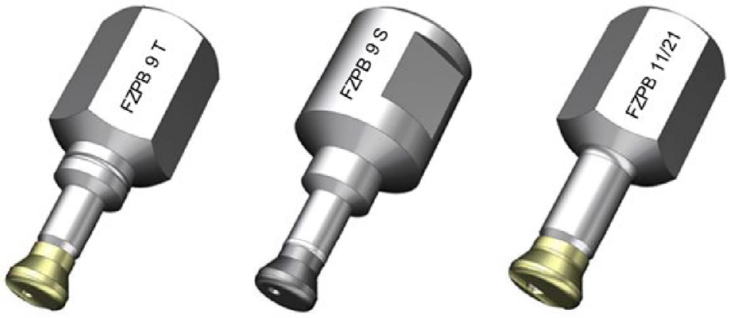

Table B2: Drill hole dimensions [mm]

Ø d_0	Ø d_1	h_r	n	h_v [1)]	h
11,2 ± 0,2	13,5 ± 0,3	4,5	≈ 4	$h - h_r \geq 6$	≥ 10,5

[1)] The value for the anchorage depth hv results from panel thickness h minus residual panel thickness h_r

Setting tools

Figure B4:

Manual setting tool SGT

Cordless screwdriver
with setting tool e.g. SGA
or screw socket

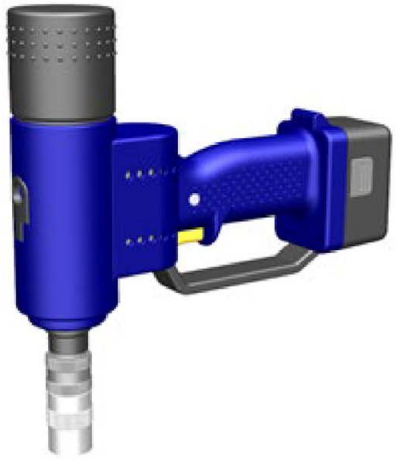

Battery-setting tool SGB

Means for undercut control ∅ d_1

Figure B5:

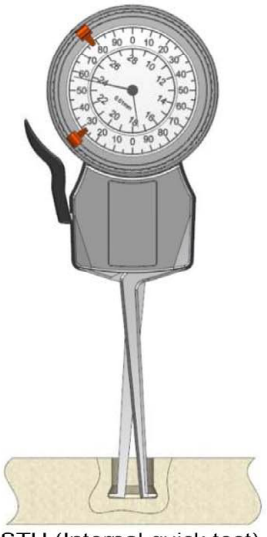

STU (Internal quick test)

Volume gauge

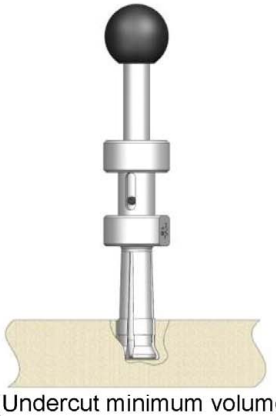

HVL-T (Undercut minimum volume gauge)

Figure B6:

Go / noGo gauge for checking cylindrical drill hole diameter d_0

DPL-T (Diameter gauge)

Means for measuring drill hole depth h_1 and drill hole diameter d_0

Figure B7:

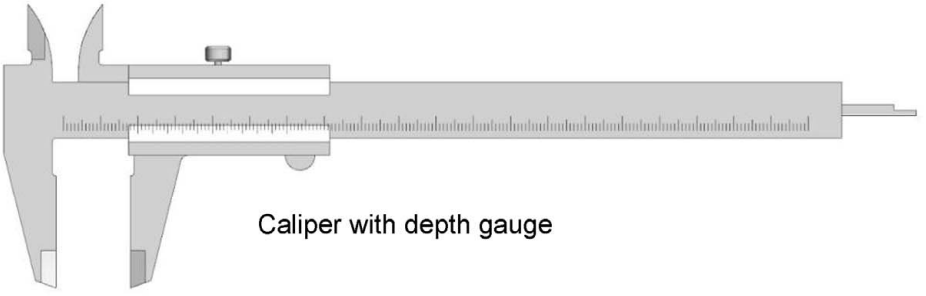

Caliper with depth gauge

Installation instructions

Example: Anchor installation with SGA

1.)

2.)

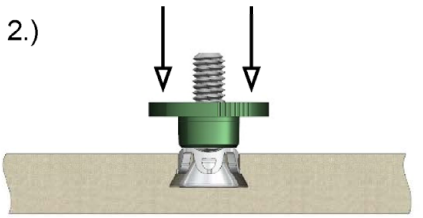

T_{inst} 3-5 Nm

3.)

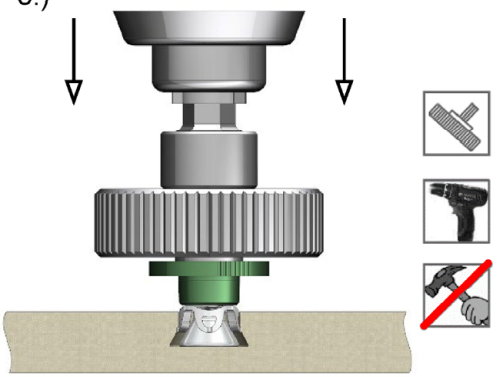

4.)

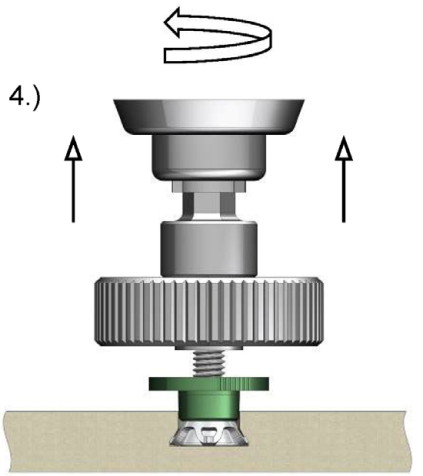

5.1.)

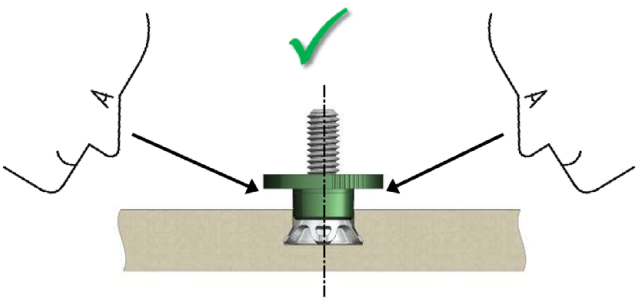

5.2.)

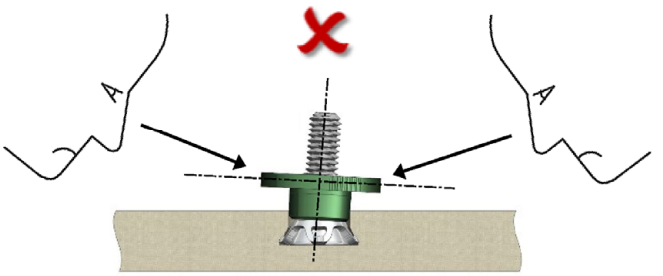

6.)

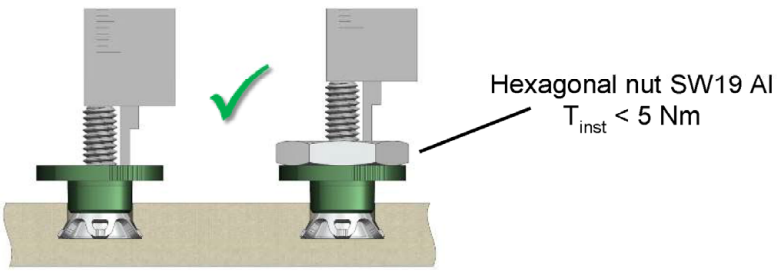

Table C1: Characteristic values for anchor design

Anchor type					FZP II 11x10 M6/T/9 PA	
Façade panel					**Laminam 12+**	
Nominal panel thickness		h_{nom} =	[mm]		12,5	
Residual panel thickness		h_r =	[mm]		≥ 4,5	
Embedment depth [1]		h_v =	[mm]		≥ 6	
Anchor spacing		a_{max} =	[mm]		750	
Edge distance		$a_{r\ min}$ =	[mm]		≥ 100	≥ 50
Characteristic resistance	Tension load	N_{Rk} =	[kN]		1,74	1,53
	Shear load	V_{Rk} =	[kN]		3,41	3,04
Trilinear limit	Interaction	X =	[-]		1,2	
Partial safety factor [2]		γ_M =	[-]		1,8	

[1] For the application of FZP II in Laminam 12+ the following applies:
Anchorage depth hv = panel thickness h - residual panel thickness h_r (see Annex B4)

[2] In absence of national regulations

Tabelle C2: Characteristic resistance for steel failure

Type of Anchor			FZP II 11 M6/T
Characteristic resistance under tension load	$N_{Rk,s}$ =	[kN]	11,10
Partial safety factor [1]	γ_{Ms} =	[-]	1,89
Characteristic resistance under shear load	$V_{Rk,s}$ =	[kN]	5,53
Partial safety factor [1]	γ_{Ms} =	[-]	1,57

[1] In absence of national regulations