ДЕКЛАРАЦИЯ ЗА ЕКСПЛОАТАЦИОННИ ПОКАЗАТЕЛИ

DoP 0322

за fischer-Zykon-анкер за фасадни панели FZP II (for Mirage) BG

1. Уникален идентификационен код на типа продукт: **DoP 0322**

2. Предвидена употреба/употреби: **Крепеж за фиксиране в задната част на фасадни панели, изработени от керамични плочи "Mirage", виж Приложението, по-специално Приложения B1 - B6.**

3. Производител: **fischerwerke GmbH & Co. KG, Klaus-Fischer-Str. 1, 72178 Waldachtal, Германия**

4. Упълномощен представител: **–**

5. Система/системи за оценяване и проверка на постоянството на експлоатационните показатели: **2+**

6. Европейски документ за оценяване: **EAD 330030-00-0601**
   Европейска техническа оценка: **ETA-22/0400; 2022-08-25**
   Орган за техническа оценка: **ETA-DANMARK A/S**
   Нотифициран орган/органи: **2873 TU Darmstadt**

7. Декларирани експлоатационни показатели:

Механична устойчивост и здравина (BWR 1)

Характерна устойчивост на пробив или повреда при изтегляне при натоварване на опън: Приложение C1

Характерна устойчивост на пробив или повреда при изтегляне при натоварване на срез: Приложение C1

Характерна устойчивост на пробив или повреда при изтегляне, при комбинирани натоварвания и натоварване на срез: Приложение C1 Y=NPD; F_{Rk}=NPD

Отстояние от ръба и междуосови разстояния: Приложения B3, C1

трайност: Приложение A3, B1

Характерна устойчивост на разрушаване на стоманата при натоварване на опън и срез: NPD

Пожарна безопасност (BWR 2)

Реакция на огън: Клас (A1)

8. Подходяща техническа документация и/или специфична техническа документация: **–**

Експлоатационните показатели на продукта, посочени по-горе, са в съответствие с декларираните експлоатационни показатели. Настоящата декларация за експлоатационни показатели се издава в съответствие с Регламент (ЕС) № 305/2011, като отговорността за нея се носи изцяло от посочения по-горе производител.

Подписано за и от името на производителя от:

Dr.-Ing. Oliver Geibig, Управляващ директор Бизнес звена и инженеринг

Jürgen Grün, Управляващ директор Химия и качество

Tumlingen, 2022-10-12

Тази Декларация за съответствие е изготвена на различни езици. В случай, че възникне спор, относно интерпретирането, трябва да се вземе предвид английската версия.

Приложението съдържа доброволна и допълнителна информация на английски език в обем и съдържание, надхвърлящи (независимо от езика) законовите изисквания.

II SPECIFIC PART OF THE EUROPEAN TECHNICAL ASSESSMENT

1 Technical description of product

The fischer ZYKON FZP II for fixing Mirage facade panels is a special anchor made of stainless steel, consisting of an anchor with M6 external thread, an expansion part, a shim washer and a hexagonal nut. The anchor is put into an undercut drill hole and by driving-in the screw it is placed form-fitted and deformation-controlled.

The Mirage facade panels are made from ceramic tiles in accordance with EN 14411 and have the following characteristics:

	Values
E-Module [N/mm²], mean	30000
Thermal Expansion (µm/mK)	6,6 m/mK
5% Fractile bending resistance, characteristic	45 N/mm²
Density [g/cm³], nominal	2,55
Frost resistance	Yes

For the installed anchor see figure in Annex A1.

2 Specification of the intended use in accordance with the applicable European Assessment Document (hereinafter EAD)

The fischer ZYKON FZP II are intended for fixing Mirage facade panels for which requirements for mechanical resistance and stability in the sense of the Basic Works Requirements 1 of Regulation 305/2011 shall be fulfilled. The façade panels shall correspond to the drawings and specifications of this European Technical Assessment. The intended use specifications of the product are detailed in the Annex B1.

The façade panels with rear fixing by the anchor may only be used for rear ventilated front curtain walls. Each façade panel shall be fixed technically strain-free with at least four anchors in a rectangular arrangement via single agraffes on a capable substructure (for small panels or small fitted pieces, differential or fill- in pieces the number and position of the anchors shall be chosen constructively).

The anchor may be used in structures subject to dry internal conditions and also in structures subject to external atmospheric exposure (including industrial and marine environment), if no particular aggressive conditions exist. Such particular aggressive conditions are e.g. permanent, alternating immersion in seawater or the splash zone of seawater, chloride atmosphere of indoor swimming pools or atmosphere with extreme chemical pollution (e.g. in desulphurisation plants or road tunnels where de-icing materials are used).

The provisions made in this European Technical Assessment are based on an assumed working life of the anchor of 50 years.

The indications given on the working life cannot be interpreted as a guarantee given by the producer or Assessment Body, but are to be regarded only as a means for choosing the right products in relation to the expected economically reasonable working life of the works.

3 Performance of the product and references to the methods used for its assessment

Characteristic	Assessment of characteristic
3.1 Mechanical resistance and stability (BWR1)	
Characteristic load bearing capacity and displacements Characteristic resistance to breakout or pull-out failure under tension load Characteristic resistance to breakout or pull-out failure under shear load Edge distance and spacing Characteristic resistance to steel failure under tension and shear load	The anchor corresponds to the drawings and specifications given in Annex A2-A3. The characteristic material values, dimensions and tolerances of the anchor not indicated in Annex A2-A3 shall correspond to the respective values laid down in the technical documentation of this European Technical Assessment. The characteristic values for the design of the façade panels with rear fixing by the anchor are given in Annex C1.
Characteristic resistance to breakout or pull-out failure under combined tension and shear load	No performance assessed
Durability	The anchors are made from stainless steel (material no. 1.4401, 1.4571 or 1.4404) corresponding to corrosion resistance class (CRC) III in EN 1993-1-4 table A.3.
3.2 Safety in case of fire (BWR2)	
Reaction to fire	The anchors are made from steel classified as Euroclass A1 in accordance with EN 13501-1 and Commission Delegated Regulation 2016/364

4 Attestation and verification of constancy of performance (AVCP)

4.1 AVCP system

According to the decision 97/161/EC the European Commission, the system(s) of assessment and verification of constancy of performance (see Annex V to Regulation (EU) No 305/2011) is 2+.

Installed fastener

Figure A1:

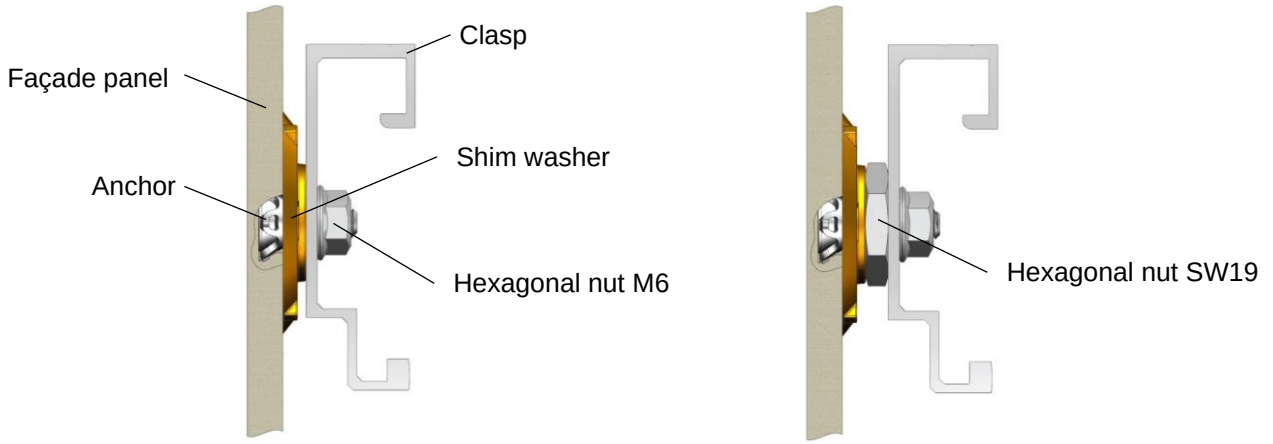

Example of façade panel on substructure

Figure A2:

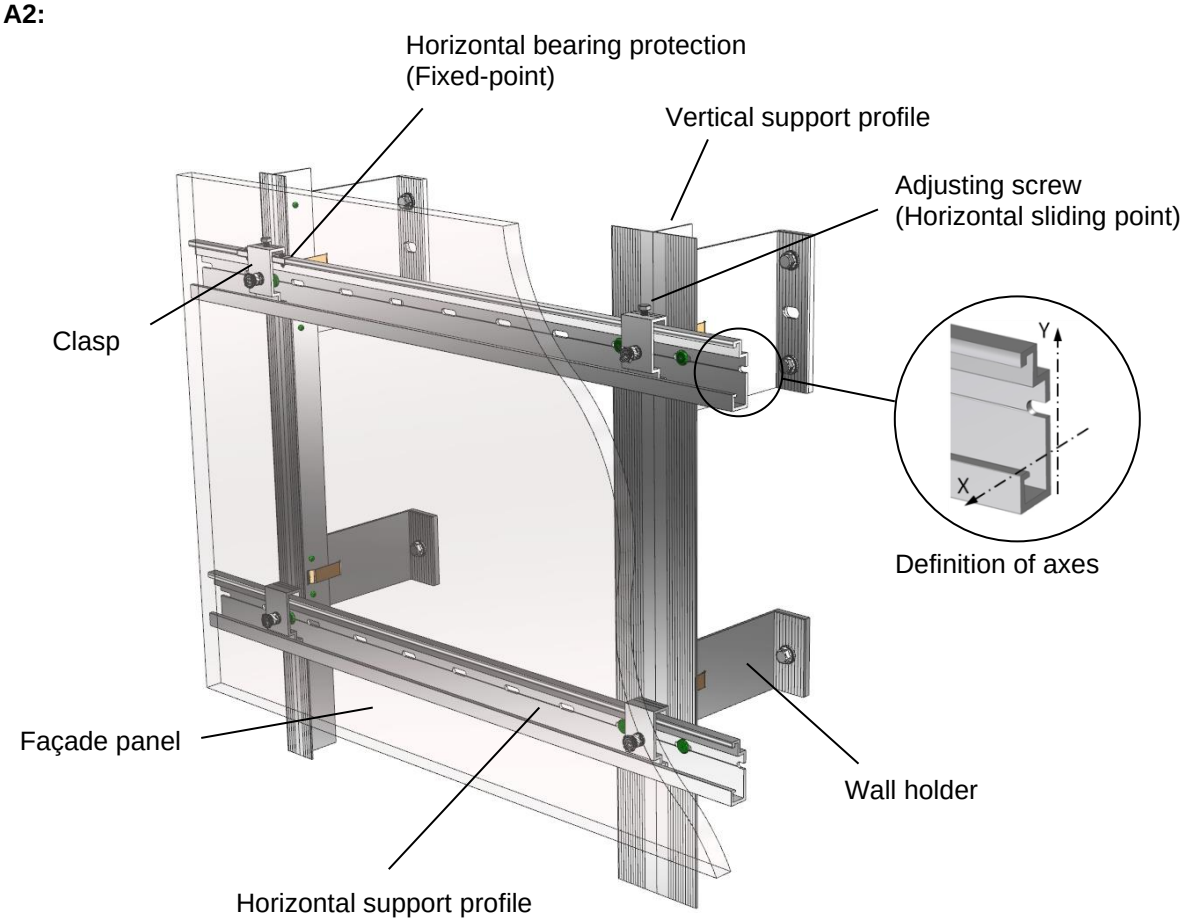

fischer Zykon panel anchor FZP II - T

Product description
Installed anchoring and fixing example

Annex A 1

Type of anchor

Anchor with external thread M6

Figure A3:

Undercut anchor
FZP II - T

without hexagonal nut

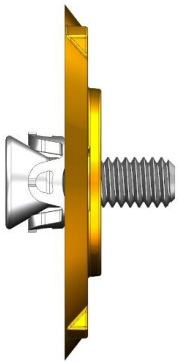

with hexagonal nut

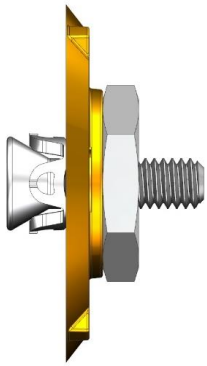

Type of mounting

Figure A4:

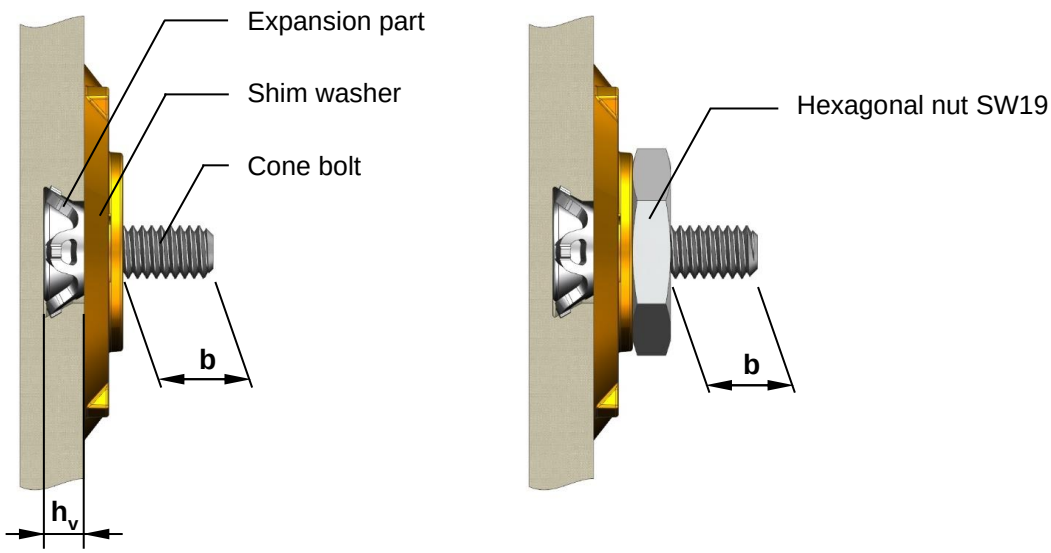

Identification system

FZP II 11 x 5 M6 / T / 10 D40 PA

- D40 PA — Shim washer made of polyamide (Al = Aluminum)
- 10 — Free thread length **b** after mounting
- T — Thin materials
- M6 — Thread diameter
- 5 — Drill hole depth $\mathbf{h_v}$ (for FZP II T $h_v = h_1 = h_s$ = Embedment depth)
- 11 — Ø cylindrical diameter $\mathbf{d_0}$
- FZP II — **Fischer Z (Cylindrical conical) Panel anchor II**

fischer Zykon panel anchor FZP II - T

Product description
Type of anchor, built-in state and identification system

Annex A 2

Parts of anchor and materials

Cone bolt external thread M6 (Option: UNC thread)
Figure A5:

Material identification

Optional:
Anti rotation lock
Nose or profiling on the cone or the front

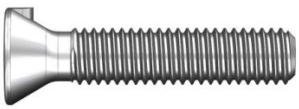

Optional:
Identifying mark, drive, e.g.: Slot; polygonal (Outside; inside); spanner flats

Expansion part
For cone bolts with external thread M6
Figure A6:

Shim washer
For cone bolts with external thread M6

Figure A7:

Identifying mark of producer

Anchorage depth h_v

Hexagonal nut
For cone bolts with external thread M6

Figure A8:

Identifying mark of producer
Marking: Al = Aluminum
Optional: R = stainless steel

Table A1: Material of anchor parts

Anchor parts	Material
Cone bolt	Stainless steel, EN 10088 :2014
Expansion part	Stainless steel, EN 10088 :2014
Shim washer	Polyamide 6.6
Hexagonal nut	Aluminum, EN 755:2016 Stainless steel, EN 10088 :2014

Specifications of intended use

Anchorages subject to:

- Static and quasi-static loads.

Use conditions (Environmental conditions):

- According to the corrosion resistance class (CRC) according to EN 1993-1-4:2015 (ETA Section 3.1)

Anchorage ground:

- The Mirage façade panels shall be in accordance with EN 144112016 "Ceramic tiles – definition, classification, characteristics, assessment and verification of constancy of performance and marking". The Mirage façade panels have to meet the requirements of group BI_a according to EN 14411:2016.
- The characteristic values of the façade panels correspond to Table B1.

Design:

- The design of anchorages under static and quasistatic load is carried out in accordance with the specifications of the façade panel manufacturer.
- The façade panels, their fixings as well as the substructure including its connection to wall brackets and their connection to the construction works are designed for the respective case of application under the responsibility of an engineer skilled in the field of façade construction.
- Verifiable calculation notes and drawings shall be prepared taking account of the loads to be anchored, the nature and strength of the base materials and the dimensions of the anchorage members as well as of the relevant tolerances. The position of the anchor is indicated on the design drawings.
- Each façade panel is fixed with at least four anchors in a rectangular arrangement via single clasps or panel support profiles on the substructure. For small panels or small fitted pieces, differential or fill- in pieces the number and position of the anchors shall be chosen constructively.
- Edge distance and spacing shall be observed. For small panels, differential and fitted pieces, the edge and axial spacing shall be chosen constructively.
- The substructure is constructed such that the façade panels are fixed technically strain-free via skids (loose bearings) and one fixed point (fixed bearing). The fixed point may be placed at the panel edge or in the panel field.
- Two fixing points of the façade panel are designed such that they are able to carry the dead load of the façade panel.
- If constraining forces are present, these must be considered for the design.
- When using clasps on horizontal support profiles, the horizontal fixing points of a facade panel at the same height must each be fixed to the same support profile.

Table B1: Characteristic values of façade panels – geometrical and physical properties

Trade name			**Mirage**
Country of origin			Italy
Maximum panel size	L x H or H x L	[mm]	1198 x 2398
Nominal panel thickness	h_{nom} =	[mm]	9
Panel thickness (minimum)	h_{min} =	[mm]	9,5
Panel thickness (maximum)	h_{max} =	[mm]	8,5
Dead load	g_k =	[kN/m²]	0,225
Specific weight	γ =	[kN/m³]	25,0
Density - dry	$\rho \geq$	[g/cm³]	2,55
Modulus of elastic	E_{mean} =	[N/mm²]	30000
Poisson ratio	ν =	[-]	0,2
Coefficient of thermal expansion	α_T =	[$10^{-6}K^{-1}$]	6,6
Characteristic bending strength	σ_{Rk} =	[N/mm²]	45

Installation:

- The drillings are done at the factory or on site under workshop conditions; when making the drillings on site the execution is supervised by the responsible project supervisor or a skilled representative of the project supervisor.
- Making of the undercut drilling is done with a special drill bit or a special CNC drill bit according to Annex B 4 and a special drilling device in accordance with the information deposited with Deutsches Institut für Bautechnik.
- The drilling residues are removed from the drill hole.
- In case of aborted hole: new drilling at a minimum distance away of twice the depth of the aborted hole.
- The geometry of the drill hole is checked on 1 % of all drillings. The following dimensions shall be checked and documented according to manufacturer's information and testing instructions by means of a control aids according to Annex B 7, Figure B5, B6 and B7.
  - Diameter of the cylindrical drill hole.
  - Diameter of the undercut.
  - Remaining wall thickness (drill hole depth and panel thickness respectively).
- If the tolerance given in Annex B 4, Table B2 is exceeded, the geometry of the drill hole shall be checked on 25 % of the drillings performed. No further drill hole may exceed the tolerances otherwise all the drill holes shall be controlled. Drilling holes falling below or exceeding the tolerances shall be rejected.

  Note: Checking the geometry of the drill hole on 1 % of all drillings means that on one of the 25 panels (this corresponds to 100 drillings for panels with 4 undercut anchors) one drilling shall be checked. If the tolerances given in Annex B 4 Table B2 are exceeded the extent of the control shall be increase to 25 % of the drillings, i.e. one drilling each shall be checked on all the 25 panels.
- In addition, every 500th drill hole and drill change the diameter of the undercut must be checked with the internal quick test.
- The anchors are installed in a deformation controlled manner. For this purpose suitable installation tools per Annex B 5, Figure B4 shall be used. The anchor is set correctly if, in the state, the spacer the bolt projection "b" as per Annex A 2, Figure B4 or Annex B 6, Illustration 5.1 is observed.
- During transport and storage on site the façade panels are protected from damages; the façade panels are not to be hung up jerkily (if need be lifters shall be used for hanging up the façade panels); façade panels and reveal panels respectively with incipient cracks are not be installed.
- The façade panels are arranged in a "reclined" or "upright" position.
- Overhead mounting is permitted (e.g. mounting of ceiling cladding)
- The façade are installed by skilled specialists and the laying instructions of the manufacturer shall be paid attention to.
- The façade panels must not be used for the transmission of impact loads and for the protection against falling.

Figure B1: Definition of edge and centre distance

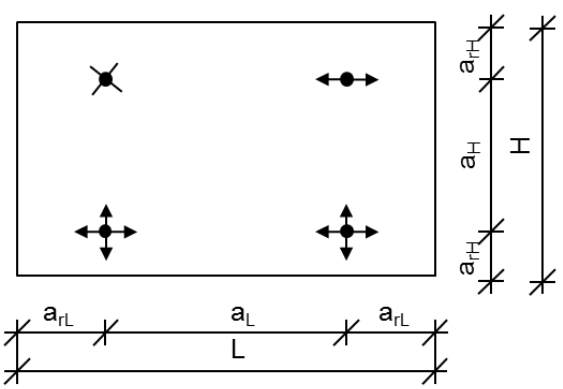

Legend:

a_{rL}, a_{rH}	= Edge distance – anchor distance to the panel edge
a_L, a_H	= Spacing – Distance between the anchors
L	= Length of the panel in horizontal direction
H	= Length of the panel in vertical direction
	= Fixed bearing (fixed support)
	= Horizontal slide bearing (slide support)
	= Horizontal and vertical slide bearing (slide support)

Geometry of the drill hole

Figure B2:

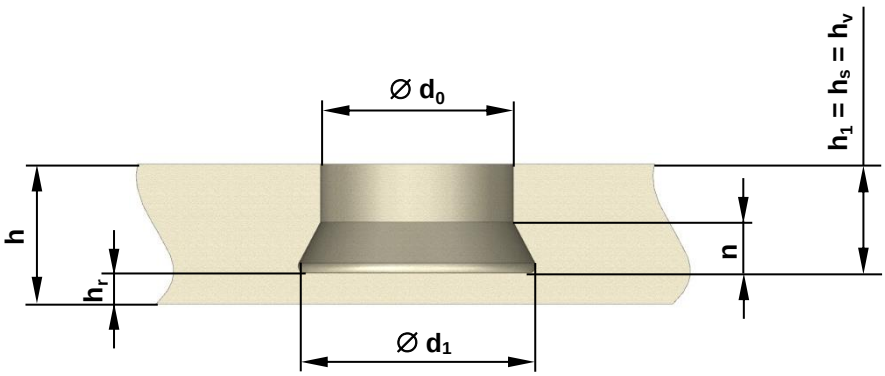

Special drills

Figure B3:

Examples:

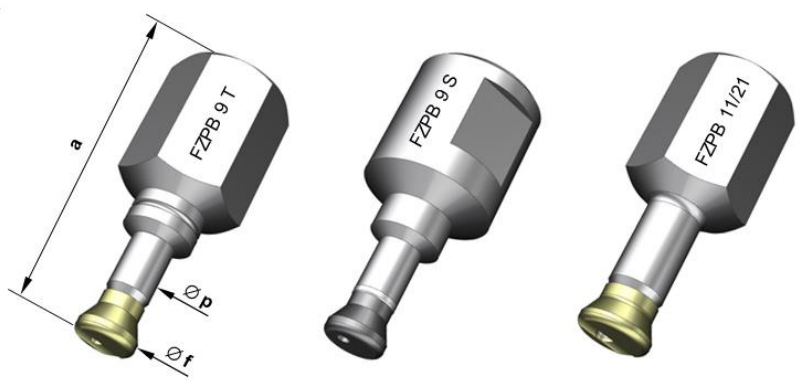

Table B2: Drill hole dimensions [mm]

Ø d_0	Ø d_1	h_r *	n	h_v	h_{nom}
11,2 ± 0,2	13,5 ± 0,3	≈ 4,0	≈ 4	$5^{+0,4}_{-0}$	≥ 9

* Is to be complied with in case of deviations from h_{nom}

Setting tools

Figure B4:

Manual setting tool SGT

Cordless screwdriver
with setting tool e.g. SGA
or screw socket

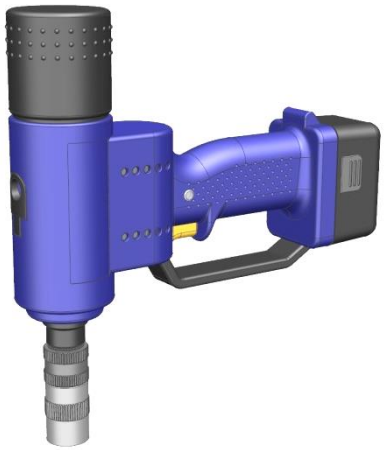

Battery-setting tool SGB

Means for undercut control ∅ d_1

Figure B5:

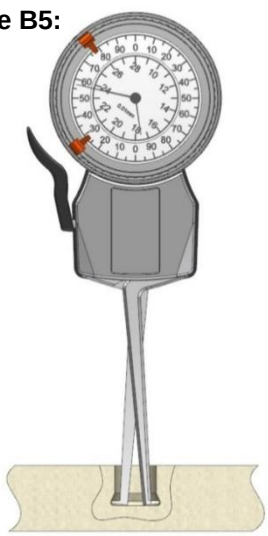

Internal quick test

Volume gauge

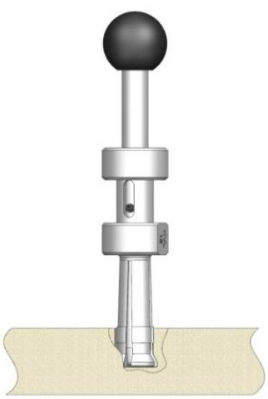

HVL-T (Undercut minimum volume gauge)

Figure B6:

Go / noGo gauge for checking cylindrical drill hole diameter d_0

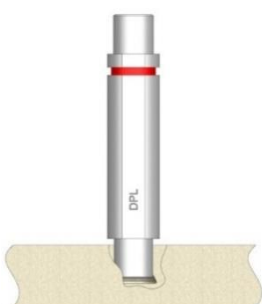

DPL-T (Diameter gauge)

Means for measuring drill hole depth h_1 and drill hole diameter d_0

Figure B7:

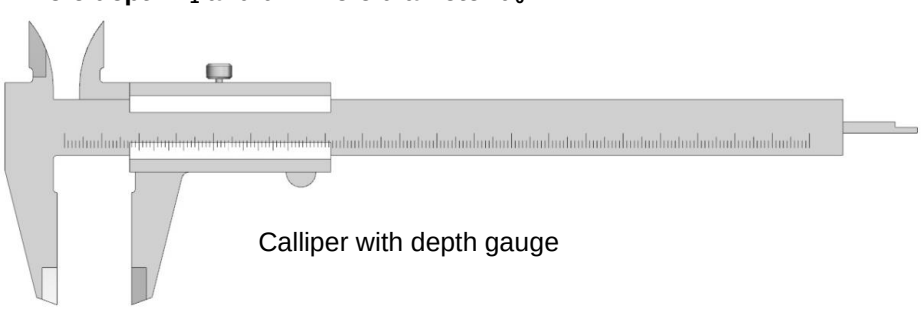

Calliper with depth gauge

Installation instructions

Example: Set with SGA

1.)

2.)

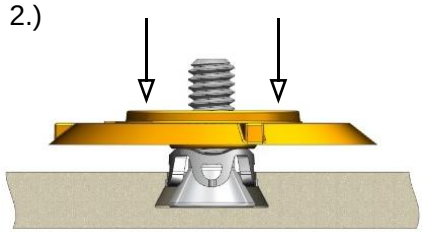

T_{inst} 3-5 Nm

3.)

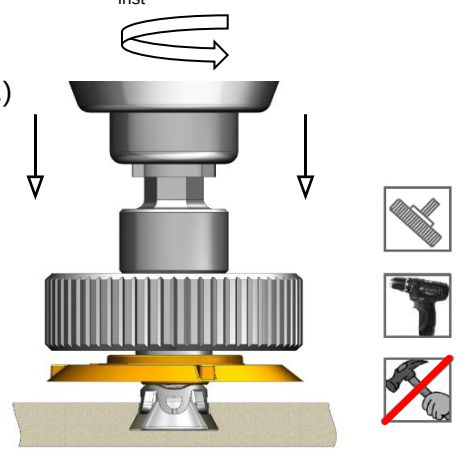

4.)

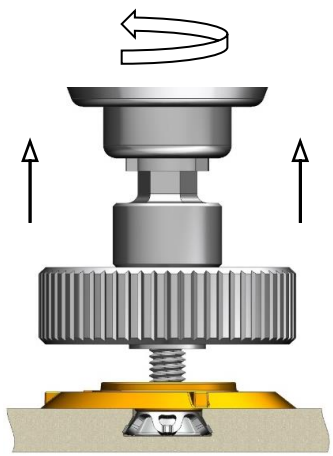

5.1.)

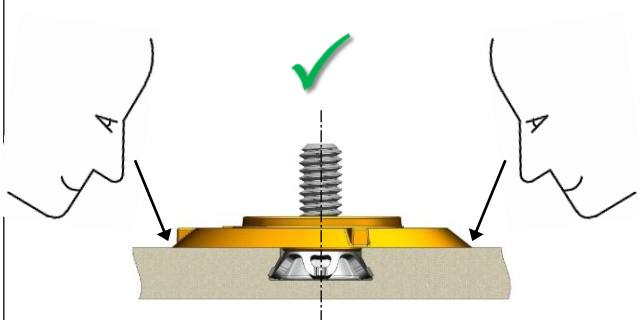

5.2.)

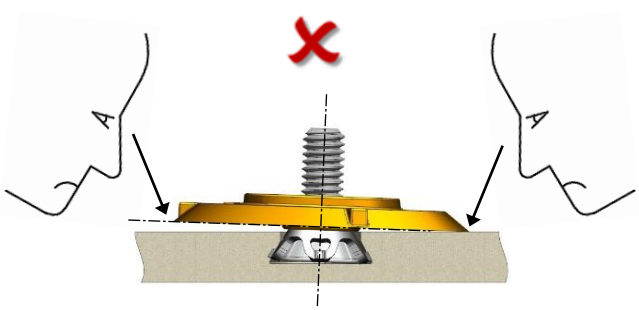

Table C1: Characteristic values of anchors and panels

Anchor type				FZP II 11x5 M6/T
Façade panel[3)]				**Mirage**
Nominal panel thickness		$h_{nom} \geq$	[mm]	9
Embedment depth [2)]		$h_v =$	[mm]	5
Characteristic resistance	Tension load [1)]	$N_{Rk} =$	[kN]	0,75
	Shear load [1)]	$V_{Rk} =$	[kN]	1,95
Trilinear limit	Interaction	$X =$	[-]	1
Minimum edge distance		$a_r =$	[mm]	100
Spacing		$a \leq$	[mm]	750

1) In case of coincident stress of an anchor due to tension and shear load following equation shall be observed:

$$\frac{N_{Ed}}{N_{Rd}} + \frac{V_{Ed}}{V_{Rd}} \leq 1.0$$

2) For FZP II: anchoring depth h_v = drill hole depth h_1 = embedment depth h_s

3) See annex B1 for additional characteristics of the façade