ДЕКЛАРАЦИЯ ЗА ЕКСПЛОАТАЦИОННИ ПОКАЗАТЕЛИ

DoP 0422

за инжекционна система fischer FIS VB (Свързващ анкер за употреба в бетон) BG

1. Уникален идентификационен код на типа продукт: **DoP 0422**

2. Предвидена употреба/употреби: **Предварително монтирано укрепване в напукан или ненапукан бетон, виж Приложението, по-специално Приложения B1 - B11.**

3. Производител: **fischerwerke GmbH & Co. KG, Otto-Hahn-Straße 15, 79211 Denzlingen, Германия**

4. Упълномощен представител: **–**

5. Система/системи за оценяване и проверка на постоянството на експлоатационните показатели: **1**

6. Европейски документ за оценяване: **EAD 330499-02-0601; 2022-09 (Decision (EU) 2024/1944)**
   Европейска техническа оценка: **ETA-24/0274; 2026-08-19**
   Орган за техническа оценка: **1020, TZUS - TECHNICKY A ZKUSEBNI USTAV STAVEBNI PRAHA s.p.**
   Нотифициран орган/органи: **2873, Technische Universität Darmstadt, Institut für Stahlbau und Werkstoffmechanik**

7. Декларирани експлоатационни показатели:

Механична устойчивост и здравина (BWR 1)

Характерна носимоспособност на опън (за статично и квази статично действие):

1) Устойчивост на разрушаване на стомана: виж Приложението, по-специално Приложения C1, C2
2) Устойчивост на комбинирано въздействие издърпване и разрушаване на бетонния конус: виж Приложението, по-специално Приложение C4
3) Товароустойчивост при при отказ от излизане на бетонния конус: виж Приложението, по-специално Приложение C3
4) Разстояние до ръба, за да се предотврати сцепването при натоварване: виж Приложението, по-специално Приложение C3
5) Здравина: виж Приложението, по-специално Приложения C3, C4
6) Максимален инсталационен въртящ момент: виж Приложението, по-специално Приложения B3, B4
7) Минимални отстояния от ръба и междуосови отстояния, дебелина на основата на закрепване: виж Приложението, по-специално Приложения B3 - B5

Характерна носимоспособност на сряз (за статично и квази статично действие):

8) Товароустойчивост при натоварване на сряз, отказ на стоманата: виж Приложението, по-специално Приложения C1, C2
9) Устойчивост на отказ при отклонение: виж Приложението, по-специално Приложение C3
10) Устойчивост на разрушаване на бетонния ръб: виж Приложението, по-специално Приложение C3

Размествания при краткосрочно и дългосрочно натоварване:

11) Размествания при краткосрочно и дългосрочно натоварване: виж Приложението, по-специално Приложение C5
12) Устойчивост на бетон, подсилен със стоманени влакна: NPD

Характерно съпротивление и Измествания за сеизмични класове C1 и C2:

13) Товароустойчивост при натоварване на опън, категория C1: NPD
14) Товароустойчивост при натоварване на опън, категория C2: NPD
15) Товароустойчивост при натоварване на сряз, категория C1: NPD
16) Товароустойчивост при натоварване на сряз, категория C2: NPD

Пожарна безопасност (BWR 2)

17) Реакция на огън: Клас (A1)

Пожароустойчивост:

18) Пожароустойчивост при съпротивление на опън, отказ на стоманата: NPD
19) Устойчивост на залепване в условия на пожар: NPD
20) Пожароустойчивост при съпротивление на сряз, отказ на стоманата: NPD

Хигиена, здраве и околна среда (BWR 3)

21) Съдържание, емисия и / или освобождаване на опасни вещества: NPD

8. Подходяща техническа документация и/или специфична техническа документация: **–**

Експлоатационните показатели на продукта, посочени по-горе, са в съответствие с декларираните експлоатационни показатели. Настоящата декларация за експлоатационни показатели се издава в съответствие с Регламент (ЕС) № 305/2011, като отговорността за нея се носи изцяло от посочения по-горе производител.
Подписано за и от името на производителя от:

i.V.

Dr. Christian Weber, Ръководител „Развойна дейност“

Dieter Pfaff, Ръководител на Международната федерация по производство и управление на качеството

Tumlingen, 2026-10-01

Тази Декларация за съответствие е изготвена на различни езици. В случай, че възникне спор, относно интерпретирането, трябва да се вземе предвид английската версия.
Приложението съдържа доброволна и допълнителна информация на английски език в обем и съдържание, надхвърлящи (независимо от езика) законовите изисквания.

Translation guidance Essential Characteristics and Performance Parameters for Annexes

Насоки за превод Основни характеристики и експлоатационни параметри на приложенията

Mechanical resistance and stability (BWR 1) **Механична устойчивост и здравина (BWR 1)**		
Characteristic resistance to tension load (static and quasi-static loading): **Характерна носимоспособност на опън (за статично и квази статично действие):**		
1	Resistance to steel failure: **Устойчивост на разрушаване на стомана:**	$N_{Rk,s}$ [kN]
2	Resistance to combined pull- out and concrete cone failure: **Устойчивост на комбинирано въздействие издърпване и разрушаване на бетонния конус:**	τ_{Rk} and/or $\tau_{Rk,100}$ [N/mm^2], ψ_c, $\psi^0_{sus,}\psi_{sus,100}$ [-] (BF)
	Resistance to pull-out failure: **Товароустойчивост при при отказ на**	$N_{Rk,p}$ and/or $N_{Rk,p,100}$ [kN], ψ_c [-] (BEF)
3	Resistance to concrete cone failure: **Товароустойчивост при при отказ от излизане на бетонния конус:**	$c_{cr,N}$ [mm], $k_{cr,N}$, $k_{ucr,N}$ [-]
4	Edge distance to prevent splitting under load: **Разстояние до ръба, за да се предотврати сцепването при натоварване:**	$c_{cr,sp}$ [mm]
5	Robustness: **Здравина:**	γ_{inst} [-]
6	Maximum installation torque: **Максимален инсталационен въртящ момент:**	max T_{inst} [Nm] (BF)
	Installation torque: **инсталационен въртящ момент:**	T_{inst} [Nm] (BEF)
7	Minimum edge distance,spacing and member thickness: **Минимални отстояния от ръба и междуосови отстояния, дебелина на основата на закрепване:**	c_{min}, s_{min}, h_{min} [mm]
Characteristic resistance to shear load (static and quasi-static loading): **Характерна носимоспособност на сряз (за статично и квази статично действие):**		
8	Resistance to steel failure: **Товароустойчивост при натоварване на сряз, отказ на стоманата:**	$V^0_{Rk,s}$ [kN], $M^0_{Rk,s}$ [Nm], k_7 [-]
9	Resistance to pry-out failure: **Устойчивост на отказ при отклонение:**	k_8 [-]
10	Resistance to concrete edge failure: **Устойчивост на разрушаване на бетонния ръб:**	d_{nom}, l_f [mm]
Displacements under short-term and long-term loading: **Размествания при краткосрочно и дългосрочно натоварване:**		
11	Displacements factors under short-term and long-term loading: **Размествания при краткосрочно и дългосрочно натоварване:**	δ_0, δ_∞ [mm/(N/mm^2)] or [mm/kN]
12	Resistance in steel fibre reinforced concrete: **Устойчивост на бетон, подсилен със стоманени влакна:**	Description
Characteristic resistance and displacements for seismic performance categories C1 and C2: **Характерно съпротивление и Измествания за сеизмични класове C1 и C2:**		
13	Resistance to tension for seismic performance category C1 **Товароустойчивост при натоварване на опън, категория C1:**	$N_{Rk,s,C1}$ [kN] (all) $\tau_{Rk,C1}$ [N/mm^2] (BF) $N_{Rk,p,C1}$ [kN] (BEF)
14	Resistance to tension and displacements for seismic performance category C2 **Товароустойчивост при натоварване на опън, категория C2:**	$N_{Rk,s,C2}$ [kN] (all) $\tau_{Rk,C2}$ [N/mm^2] (BF) $N_{Rk,p,C2}$ [kN] (BEF) $\delta_{N,C2(50\%),}$ $\delta_{N,C2(100\%)}$ [mm] (all)
15	Resistance to shear for seismic performance category C1 **Товароустойчивост при натоварване на сряз, категория C1:**	$V_{Rk,s,C1}$ [kN] (all)
16	Resistance to shear load and displacements for seismic performance category C2 **Товароустойчивост при натоварване на сряз, категория C2:**	$V_{Rk,s,C2}$ [kN] (all) $\delta_{V,C2(50\%),}$ $\delta_{V,C2(100\%)}$ [mm] (all)
Safety in case of fire (BWR 2) **Пожарна безопасност (BWR 2)**		
17	Reaction to fire **Реакция на огън:**	Class Клас (A1)
Resistance to fire **Пожароустойчивост:**		
18	Fire resistance to steel failure (tension load): **Пожароустойчивост при съпротивление на опън, отказ на стоманата:**	$N_{Rk,s,fi}$ [kN]
19	Bond resistance under fire conditions: **Устойчивост на залепване в условия на пожар:**	$k_{fi,p}$ (θ) [-], $\tau_{Rk,fi}$ (θ) [N/mm^2] (BF)
20	Fire resistance to steel failure under shear loading: **Пожароустойчивост при съпротивление на сряз, отказ на стоманата:**	$V_{Rk,s,fi}$ [kN], $M^0_{Rk,s,fi}$ [Nm]
Hygiene, health and the environment (BWR 3) **Хигиена, здраве и околна среда (BWR 3)**		
21	Content, emission and/or release of dangerous substances: **Съдържание, емисия и / или освобождаване на опасни вещества:**	Description/Level

Specific parts

1. Technical description of the product

The fischer injection system FIS VB for uncracked concrete is a bonded anchor consisting of a cartridge with injection mortar and a steel element. The steel element is galvanized or stainless steel threaded rod.

The steel element is placed into a drilled hole filled with injection mortar and is anchored via the bond between metal part, injection mortar and concrete.

The illustration and the description of the product are given in Annex A.

2. Specification of the intended use in accordance with the applicable European Assessment Document (hereinafter EAD)

The performances given in Section 3 are only valid if the anchor is used in compliance with the specifications and conditions given in Annex B.

The provisions made in this European Technical Assessment are based on an assumed working life of the anchor of at least 50 years. The indications given on the working life cannot be interpreted as a guarantee given by the producer, but are to be regarded only as a means for choosing the products in relation to the expected economically reasonable working life of the works.

3. Performance of the product and references to the methods used for its assessment

3.1 Mechanical resistance and stability (BWR 1)

Essential characteristic	Performance
Characteristic resistance to tension load (static and quasi-static loading)	Annex C1 to C4
Characteristic resistance to shear load (static and quasi-static loading)	Annex C1 to C3
Displacements under short term and long term loading	Annex C5
Characteristic resistance and displacements for seismic performance categories C1 and C2	No performance assessed

3.2 Safety in case of fire (BWR 2)

Essential characteristic	Performance
Reaction to fire	Satisfy the requirements for performance class A1
Resistance to fire	No performance assessed

3.3 Hygiene, health and environment (BWR 3)

No performance assessed.

4. Assessment and verification of constancy of performance (hereinafter AVCP) system applied, with reference to its legal base

According to the Decision 96/582/EC of the European Commission the system of assessment verification of constancy of performance (see Annex IX to Regulation (EU) 2024/3110) is system 1.

Installation conditions part 1

fischer Anchor rod FIS A / RG (Anchor rod) and commercial standard Threaded rod (Threaded rod)

Pre-positioned installation

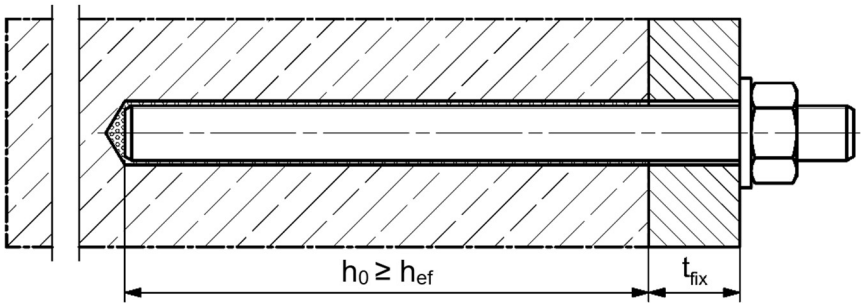

Push-through installation (annular gap filled with mortar)

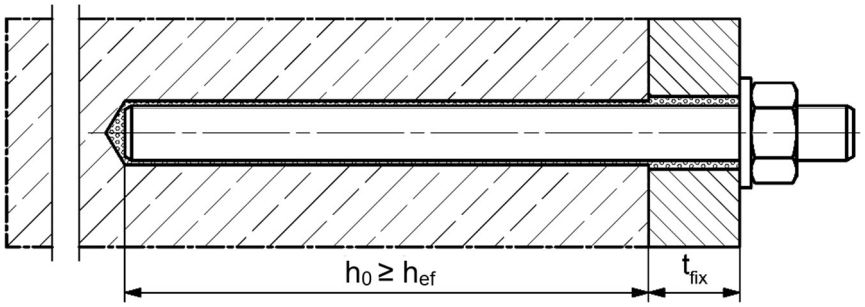

Pre-positioned or push-through installation with subsequently injected fischer filling disc
(annular gap filled with mortar)

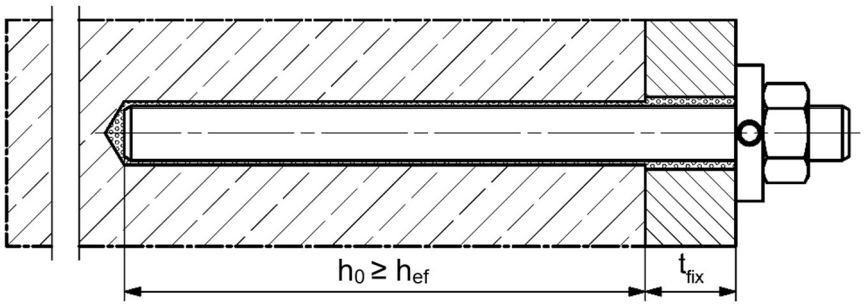

Figures not to scale

h_0 = drill hole depth

h_{ef} = effective embedment depth

t_{fix} = thickness of fixture

Installation conditions part 2

fischer internal threaded anchor FIS IG (fischer FIS IG)

Pre-positioned installation

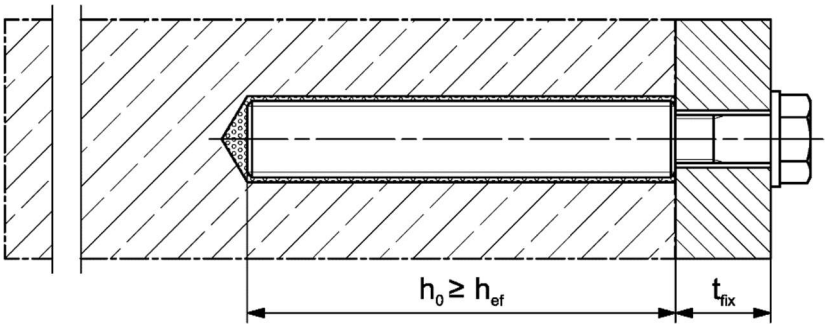

Pre-positioned installation with subsequently injected fischer filling disc (annular gap filled with mortar**)**

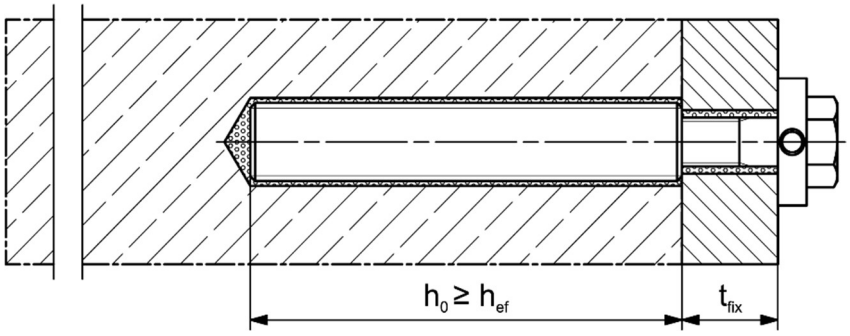

Figures not to scale

h_0 = drill hole depth

h_{ef} = effective embedment depth

t_{fix} = thickness of fixture

Overview system components part 1

Injection cartridge (shuttle cartridge) with sealing cap; Sizes: 360 ml, 825 ml

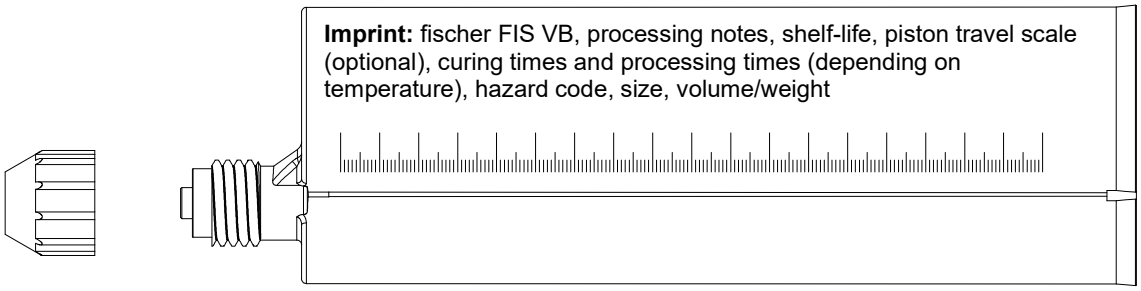

Injection cartridge (coaxial cartridge) with sealing cap; Sizes: 100 ml, 150 ml, 300 ml, 380 ml, 410 ml
Injection cartridge (foilbag cartridge) with sealing cap; Sizes: 100 ml, 150 ml, 300 ml

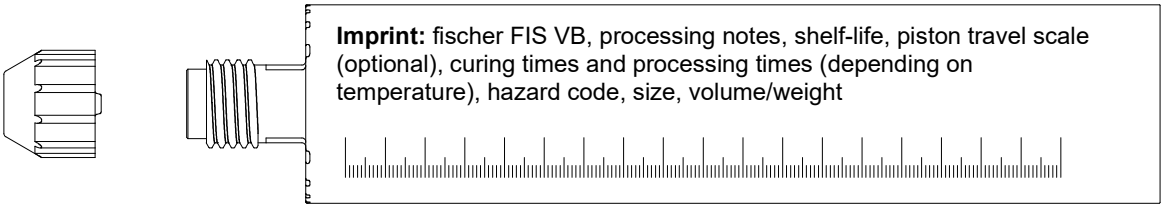

Static mixer FIS MR Plus for injection cartridges up to 825 ml

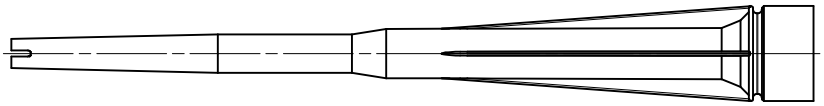

Static mixer FIS JMR for injection cartridges of 825 ml

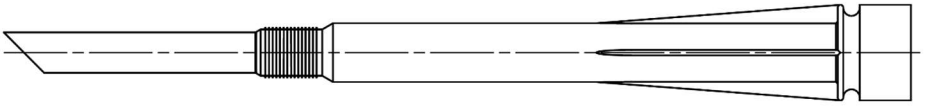

Injection adapter and extension tube Ø 9 for static mixer FIS MR Plus;
Injection adapter and extension tube Ø 9 or Ø 15 for static mixer FIS JMR

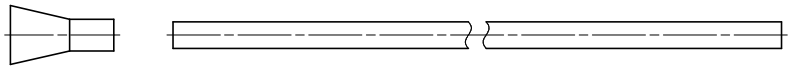

Cleaning brush BS

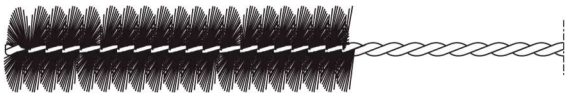

Blow-out pump AB G

Compressed-air cleaning tool ABP

Figures not to scale

Overview system components part 2

Anchor rod / Threaded rod
Size: M8, M10, M12, M16, M20

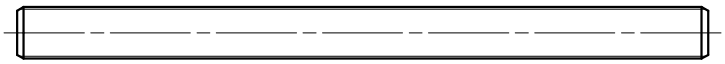

fischer FIS IG
Size: M5, M6, M8, M10, M12

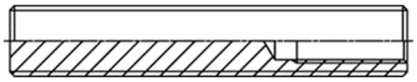

Screw / Anchor rod / Threaded rod / washer / hexagon nut

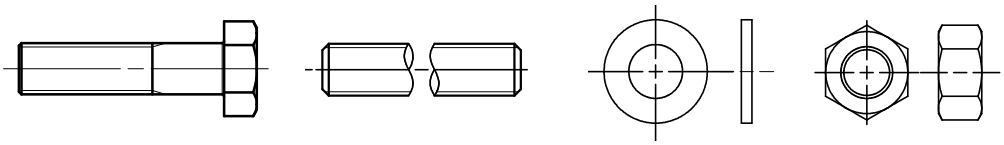

fischer filling disc with injection adapter

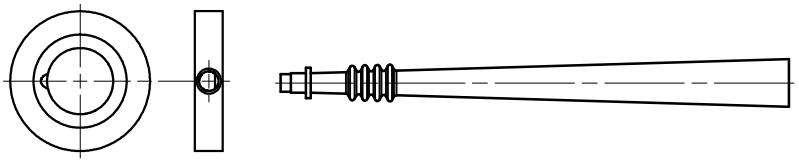

fischer centering clip DD-S / DD-E

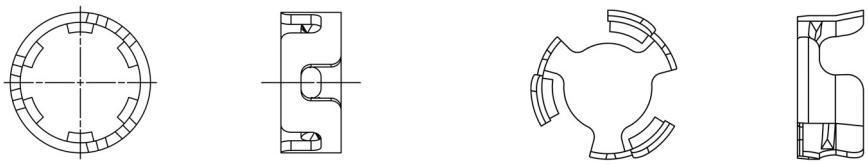

Figures not to scale

fischer injection system FIS VB

Product description
Overview system components part 2; metal parts, fischer centering clip, injection adapter

Annex A4

Table A5.1: Materials

Part	Designation	Material		
1	Injection cartridge	Mortar, hardener, filler		
	Steel grade	Steel zinc plated (zp, hdg)	Stainless steel R EN 10088-1 Corrosion resistance class CRC III EN 1993-1-4	High corrosion resistant steel HCR EN 10088-1 Corrosion resistance class CRC V EN 1993-1-4
2	Anchor rod / Threaded rod	Property class 5.8 or 8.8; EN ISO 898-1 zp ≥ 5 µm, EN ISO 4042 or hot dip galvanised ≥ 40 µm EN ISO 10684 f_{uk} ≤ 1000 N/mm^2 A_5 > 8 % fracture elongation	Property class 50, 70 or 80; EN ISO 3506-1 1.4401; 1.4404; 1.4578; 1.4571; 1.4439; 1.4362; 1.4062; 1.4662; 1.4462; EN 10088-1 f_{uk} ≤ 1000 N/mm^2 A_5 > 8 % fracture elongation	Property class 50, 70 or 80; EN ISO 3506-1 or property class HCR 70 with f_{yk} ≥ 560 N/mm^2; 1.4565;1.4529; EN 10088-1 f_{uk} ≤ 1000 N/mm^2 A_5 > 8 % fracture elongation
3	Washer ISO 7089	zinc plated ≥ 5 µm, EN ISO 4042 or hot dip galvanised ≥ 40 µm EN ISO 10684	1.4401; 1.4404; 1.4578; 1.4571; 1.4439; 1.4362; EN 10088-1	1.4565; 1.4529; EN 10088-1
4	Hexagon nut	Property class 5 or 8 EN ISO 898-2 zinc plated ≥ 5 µm, EN ISO 4042 or hot dip galvanised ≥ 40 µm EN ISO 10684	Property class 50, 70 or 80 EN ISO 3506-2 1.4401; 1.4404; 1.4578; 1.4571; 1.4439; 1.4362; EN 10088-1	Property class 50, 70 or 80 EN ISO 3506-2 1.4565; 1.4529; EN 10088-1
5	fischer FIS IG	Property class 5.8 EN ISO 898-1 zinc plated ≥ 5 µm, EN ISO 4042	Property class 70 EN ISO 3506-1; 1.4401; 1.4404; 1.4578; 1.4571; 1.4439; 1.4362; EN 10088-1	Property class 70 EN ISO 3506-1 1.4565; 1.4529; EN 10088-1
6	Commercial standard screw or Anchor rod / Threaded rod for fischer FIS IG	Property class 5.8 or 8.8; EN ISO 898-1 zinc plated ≥ 5 µm, EN ISO 4042 A_5 > 8 % fracture elongation	Property class 70 EN ISO 3506-1 1.4401; 1.4404; 1.4578; 1.4571; 1.4439; 1.4362; EN 10088-1 A_5 > 8 % fracture elongation	Property class 70 EN ISO 3506-1 1.4565; 1.4529; EN 10088-1 A_5 > 8 % fracture elongation
7	fischer filling disc similar to DIN 6319-G	zinc plated ≥ 5 µm, EN ISO 4042 or hot dip galvanised ≥ 40 µm EN ISO 10684	1.4401; 1.4404; 1.4578; 1.4571; 1.4439; 1.4362; EN 10088-1	1.4565;1.4529; EN 10088-1

Specifications of intended use part 1

Table B1.1: Overview use and performance categories

		FIS VB with …			
		Anchor rod Threaded rod 		fischer FIS IG 	
Hammer drilling with standard drill bit		all sizes			
Static and quasi static load, in	uncracked concrete	all sizes	Tables: C1.1 C3.1 C4.1 C5.1	all sizes	Tables: C2.1 C3.1 C4.1 C5.1
Use category I1	dry or wet concrete	all sizes			
Installation direction		D3 (downward and horizontal and upwards (e.g. overhead) installation)			
Installation temperature		$T_{i,min}$ = 0 °C to $T_{i,max}$ = +40 °C			
In-service temperature	Temperature range I	-40 °C to +40 °C	(max. short term temperature +40 °C ; max. long term temperature +24 °C)		
	Temperature range II	-40 °C to +80 °C	(max. short term temperature +80 °C ; max. long term temperature +50 °C)		

Specifications of intended use part 2

Base materials:

- Compacted reinforced or unreinforced normal weight concrete without fibres of strength classes C20/25 to C50/60 according to EN 206.

Use conditions (Environmental conditions):

- Fastener intended for use in structures subject to dry, internal conditions (all materials).
- For all other conditions according to EN 1993-1-4 corresponding to corrosion resistance classes to **Annex A5 Table A5.1**.

Design:

- Fastenings are designed in accordance with EN 1992-4.
- The structural design is conducted under responsibility of a designer experienced in the field of anchorages and concrete works.
- Verifiable calculation notes and drawings are to be prepared taking account of the loads to be anchored. The position of the fastener is indicated on the design drawings (e.g. position of the fastener relative to reinforcement or to supports, etc.).

Installation:

- Fastener installation is to be carried out by appropriately qualified personnel and under the supervision of the person responsible for technical matters of the site.
- Fastening depth should be marked and adhered to installation.
- Overhead installation is allowed (necessary equipment see installation instruction).

Table B3.1: Installation parameters for **Anchor rods / Threaded rods**

Anchor rods / Threaded rods			Thread	M8	M10	M12	M16	M20
Nominal drill hole diameter		d_0	[mm]	10	12	14	18	24
Drill hole depth		h_0 [2)]		$h_0 \geq h_{ef}$				
Effective embedment depth		$h_{ef,\,min}$		60	60	70	80	90
		$h_{ef,\,max}$		160	200	240	320	400
Simplified spacing and edge distance[1)]		s = c		40	45	55	65	85
Maximum diameter of the clearance hole of the fixture	pre-positioned installation	d_f		9	12	14	18	22
	push-through installation	d_f		12	14	16	20	26
Minimum thickness of concrete member		h_{min}		h_{ef} + 30 (≥ 100)			h_{ef} + $2d_0$	
Maximum installation torque		max T_{inst}	[Nm]	10	20	40	60	120

1) Detailed calculation according to **Annex B5 and B6**.

2) When using centering clips DD-S / DD-E, observe the deviating specifications as specified in **Table B8.1.**

Anchor rod / Threaded rod

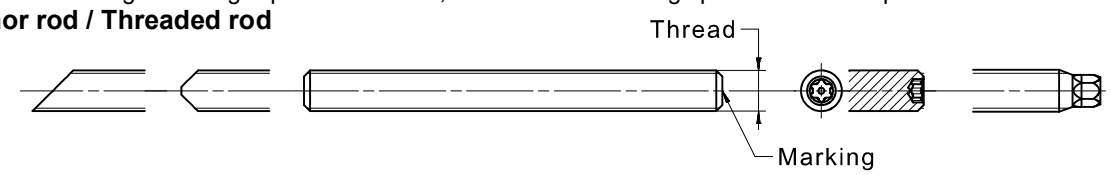

Marking (on random place) fischer Anchor rod:

Steel zinc plated PC[1)] 8.8	● or **+**	Steel hot-dip PC[1)] 8.8	●
High corrosion resistant steel HCR PC[1)] 50	●	High corrosion resistant steel HCR PC[1)] 70	**-**
High corrosion resistant steel HCR PC[1)] 80	(	Stainless steel R property class 50	**~**
Stainless steel R property class 80	∗		
Alternatively: Colour coding according to DIN 976-1		[1)] PC = property class	

Installation conditions:

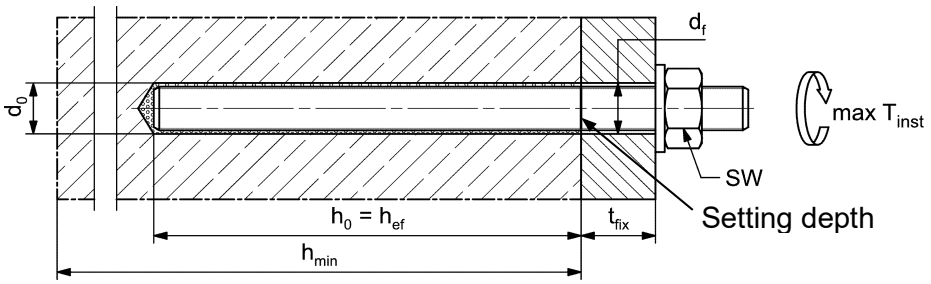

Threaded rods, washers and hexagon nuts may also be used if the following requirements are fulfilled:

- Materials, dimensions and mechanical properties according to **Annex A5, Table A5.1.**
- Inspection certificate 3.1 according to EN 10204:2004, the documents have to be stored.
- Setting depth is marked.
- Hot-dip galvanized steel
  Steel load-bearing capacities for hot-dip galvanised parts are only valid if the threaded rod and nut are correctly paired. The strength class of the nut must be one strength class higher than that of the threaded rod (≥ M12 in combination with tolerance class 6AX in accordance with EN ISO 10684 two strength classes higher). The pairing of undersized threaded rods (additional designation U according to EN ISO 10684) with oversized nuts (additional designation Z or X according to EN ISO 10684) is not permitted under any circumstances.

Figures not to scale

Table B4.1: Installation parameters for **fischer FIS IG**

fischer FIS IG		Thread	M5	M6	M8	M10	M12
Diameter of anchor	$d_{nom} = d_H$		8	10	12	16	20
Nominal drill hole diameter	d_0		10	12	14	18	24
Drill hole depth	h_0 2)		$h_0 \geq h_{ef} = L_H$				
Effective embedment depth ($h_{ef} = L_H$)	$h_{ef,\,min}$		60	60	70	80	90
	$h_{ef,\,max}$		160	200	240	320	400
Simplified spacing and edge distance 1)	s = c	[mm]	40	45	55	65	85
Diameter of the clearance hole in the fixture	d_f		6	7	9	12	14
Minimum thickness of concrete member	h_{min} 1)		h_{ef} + 30 (≥ 100)			$h_{ef} + 2d_0$	
Maximum screw-in depth	$l_{E,max}$		18	18	20	25	30
Minimum screw-in depth	$l_{E,min}$		8	8	10	12	14
Maximum installation torque	max T_{inst}	[Nm]	5	5	10	20	40

1) Detailed calculation according to **Annex B5 and B6**.

2) When using centering clips DD-S / DD-E, observe the deviating specifications as specified in **Table B8.1.**

fischer FIS IG

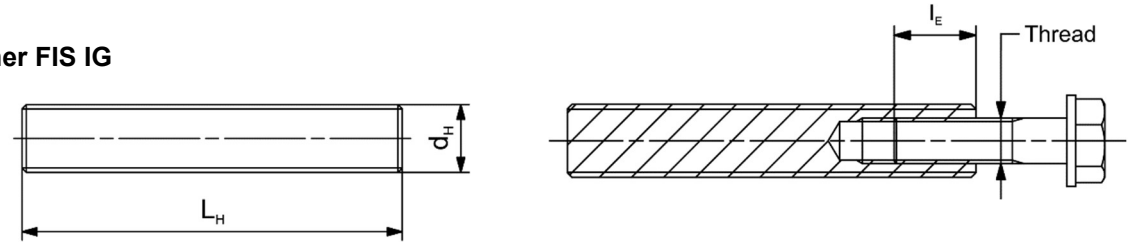

Marking (at any location):

High corrosion resistant steel HCR property class 70 -

Bolts or threaded rods (including nut and washer) must comply with the relevant material and strength class as specified in **Annex A5**, **Table A5.1.**

Installation conditions:

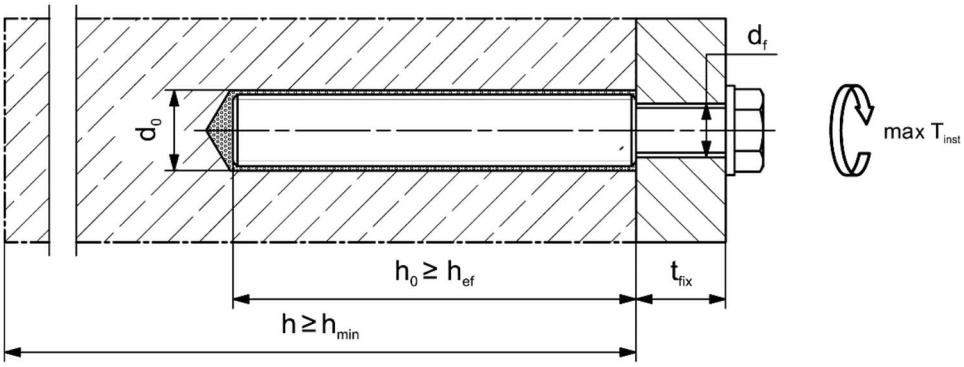

Figures not to scale

Table B5.1: Minimum spacing and minimum edge distance for **Anchor rods / Threaded rods** and **fischer FIS IG**

Anchor rods / Threaded rods			**M8**		**M10**	**-**	**M12**	**-**	**M16**	**-**	**M20**	**-**
fischer FIS IG			**-**	**M5**	**-**	**M6**	**-**	**M8**	**-**	**M10**	**-**	**M12**
Minimum edge distance												
Uncracked concrete	c_{min}	[mm]	40	40	45	45	45	45	50	50	55	55
Minimum spacing	s		according to **Annex B6**									
Minimum spacing												
Uncracked concrete	s_{min}	[mm]	40	40	45	45	55	55	65	65	85	85
Minimum edge distance	c		according to **Annex B6**									
Required projecting area												
Uncracked concrete≥C20/25	$A_{sp,req}$	[1000 mm²]	8,0	3,5	13,0	3,5	22,0	5,5	24,0	8,0	38,5	13,0

Splitting failure for minimum edge distance and spacing in dependence of the effective embedment depth h_{ef}.

For the calculation of minimum spacing and minimum edge distance of anchors in combination with different embedment depths and thicknesses of concrete members the following equation shall be fulfilled:

$$\mathbf{A_{sp,req} < A_{sp,t}}$$

$A_{sp,req}$ = required projecting area
$A_{sp,t}$ = projecting area (according to **Annex B6**)

Table B6.1: **Projecting area $A_{sp,t}$** with concrete member thickness $h > h_{ef} + 1{,}5 \cdot c$ and $h \geq h_{min}$

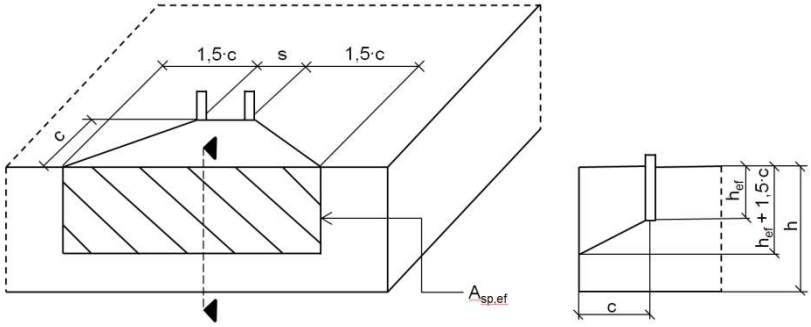

Single fastener	$A_{sp,t} = (3 \cdot c) \cdot (h_{ef} + 1{,}5 \cdot c)$	[mm²]	with $c \geq c_{min}$
Group of fastener with $s > 3 \cdot c$	$A_{sp,t} = (6 \cdot c) \cdot (h_{ef} + 1{,}5 \cdot c)$	[mm²]	
Group of fastener with $s \leq 3 \cdot c$	$A_{sp,t} = (3 \cdot c + s) \cdot (h_{ef} + 1{,}5 \cdot c)$	[mm²]	with $c \geq c_{min}$ and $s \geq s_{min}$

Table B6.2: **Projecting area $A_{sp,t}$** with concrete member thickness $h > h_{ef} + 1{,}5 \cdot c$ and $h \geq h_{min}$

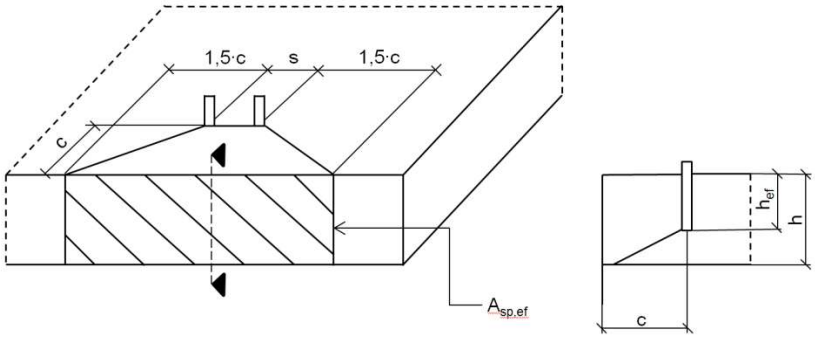

Single fastener	$A_{sp,t} = 3 \cdot c \cdot$ existing h	[mm²]	with $c \geq c_{min}$
Group of fastener with $s > 3 \cdot c$	$A_{sp,t} = 6 \cdot c \cdot$ existing h	[mm²]	
Group of fastener with $s \leq 3 \cdot c$	$A_{sp,t} = (3 \cdot c + s) \cdot$ existing h	[mm²]	with $c \geq c_{min}$ and $s \geq s_{min}$

Edge distance and axial spacing shall be rounded up to at least 5 mm.

Figures not to scale

Table B7.1: Parameters of the **cleaning brush** BS (steel brush with steel bristles)

The size of the cleaning brush refers to the drill hole diameter

Nominal drill hole diameter	d_0	[mm]	10	12	14	18	24
Steel brush diameter BS	d_b		11	14	16	20	26

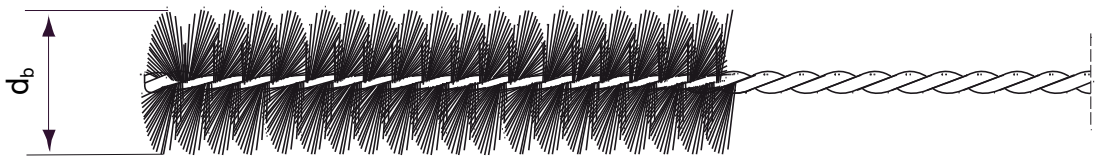

Table B7.2: **Maximum processing** time of the mortar and **minimum curing** time

(During the curing time of the mortar the concrete temperature may not fall below the listed minimum temperature)

Temperature at anchoring base [°C]	Maximum processing time t_{work}	Minimum curing time [1] t_{cure}
> 0 to 5 [2]	13 min	3 h
> 5 to 10	9 min	90 min
> 10 to 20	5 min	60 min
> 20 to 30	3 min	45 min
> 30 to 40	2 min	35 min

[1] In wet concrete the curing times must be doubled.
[2] Minimum cartridge temperature +5°C

Table B7.3: Conditions for use of **static mixer** without an **extension tube**

Nominal drill hole diameter	d_0	[mm]	10	12	14	18	24
Drill hole depth h_0 by using	FIS MR Plus		≤90		≤120	≤150	≤190
	FIS JMR		-	-	≤90	≤180	≤220

Figures not to scale

Table B8.1: Parameters of the **fischer centering clip DD-S / DD-E**

Anchor rods / Threaded rods			**M12**	**M16**	**M20**
fischer FIS IG			**M8**	**M10**	**M12**
fischer centering clip DD-S / DD-E			**M12**	**M16**	**M20**
fischer centering clip DD-S	h_{DD-S}	[mm]	6,5	8,0	9,0
fischer centering clip DD-E	h_{DD-E}	[mm]	12,0	13,5	18,0
Drill hole depth	h_0	[mm]	$h_0 \geq h_{nom} + 3$ mm		
Overall fastener embedment depth	h_{nom}	[mm]	$h_{nom} \leq h_{ef,max}$		
Minimum thickness of concrete member	h_{min}	[mm]	$h_{nom} + 30$ (≥ 100)	$h_{nom} + 2d_0$	

The uppermost DD-S clip should be positioned approx. 5 - 10 mm below the concrete surface.
The effective embedment depth h_{ef} is calculated as follows when using the DD-S / DD-E clips.

$$\mathbf{h_{ef} = h_{nom} - h_{DD-E} - n \cdot h_{DD-S}}$$

n = number of DD-S clips used

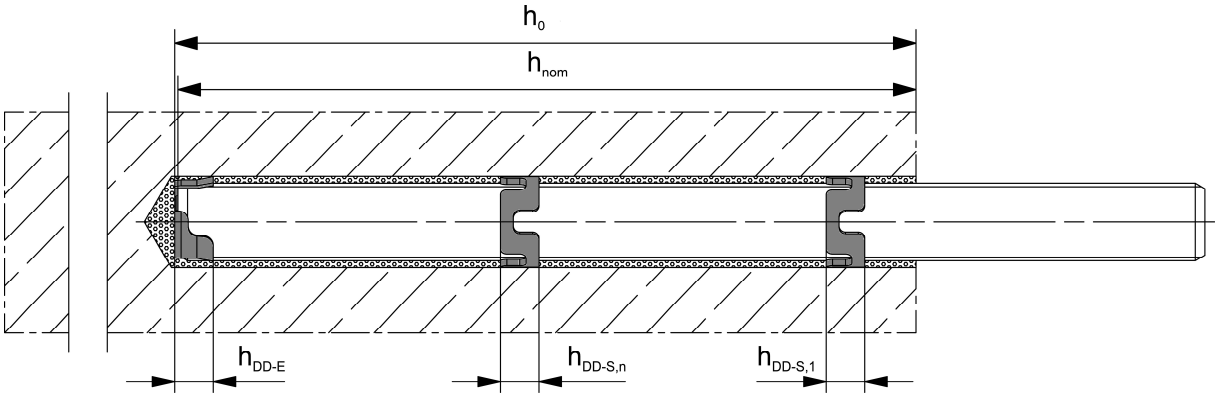

Figures not to scale

Installation instructions part 1

Drilling and cleaning the hole (hammer drilling with standard drill bit)

1	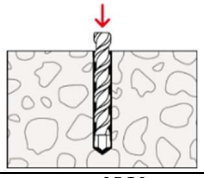	Drill the hole. Nominal drill hole diameter $\mathbf{d_0}$ and drill hole depth $\mathbf{h_0}$ see **Tables B3.1 or B4.1**.		
2	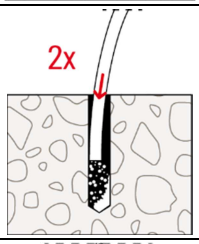	Clean the drill hole: For $h_{ef} \leq 12d_{nom}$ and $d_0 < 18$ mm blow out the hole twice by hand.	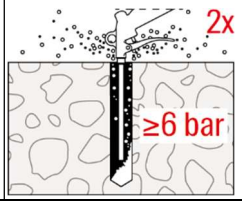	For $h_{ef} > 12d_{nom}$ and / or $d_0 \geq 18$ mm blow out the hole twice with oil-free compressed air ($p \geq 6$ bar). Use suitable compressed-air nozzle
3	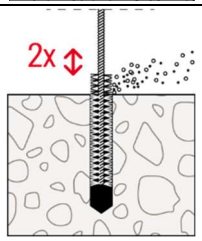	Brush the drill hole twice. For deep holes use an extension. Use suitable brushes (see **Table B7.1**).		
4	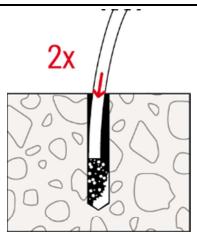	Clean the drill hole: For $h_{ef} \leq 12d_{nom}$ and $d_0 < 18$ mm blow out the hole twice by hand.	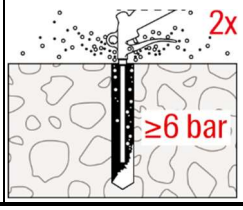	For $h_{ef} > 12d_{nom}$ and / or $d_0 \geq 18$ mm blow out the hole twice with oil-free compressed air ($p \geq 6$ bar). Use suitable compressed-air nozzle.

Go to step 5

Installation instructions part 2

Preparing the cartridge

5	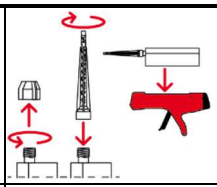	Remove the sealing cap Screw on the static mixer Place the cartridge into the dispenser
6	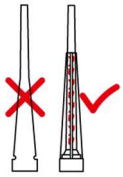	Ensuring that the spiral inside the mixer is clearly visible.
7	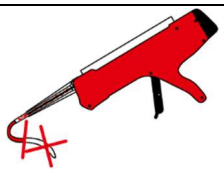	Extrude approximately 10 cm of material out until the resin is evenly grey in colour. Do not use mortar that is not uniformly grey.

Go to step 8

Injection of the mortar

8	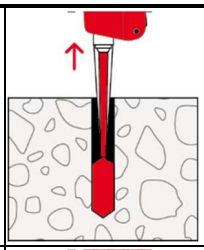	For $h_0 = h_{ef}$ fill approximately 2/3 of the drill hole with mortar. For $h_0 > h_{ef}$ more mortar is needed. Always begin from the bottom of the hole and avoid bubbles.
9	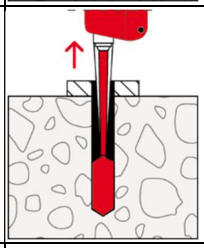	**Push-through installation:** the drill hole in the fixture must be also filled with mortar.
10	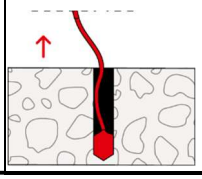	The conditions for mortar injection without extension tube can be found in **Table B7.3.** 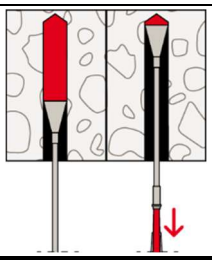 For overhead installation, deep holes (h_0 > 250 mm) use an injection-adapter.

Go to step 11

Installation instructions part 3

Installation of Anchor rods / Threaded rods and fischer FIS IG

11	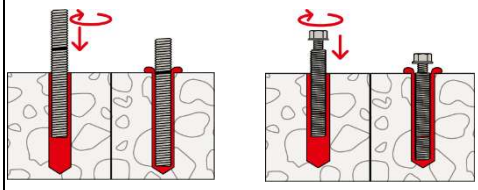	Only use clean and oil-free metal parts. Push the Anchor rod / Threaded rods with the setting depth mark or fischer FIS IG down to the bottom of the hole, turning it slightly while doing so. No turning movement is permitted when using the DD-S / DD-E centering clips. After inserting the metal parts, excess mortar must be emerged around the anchor element.		
12	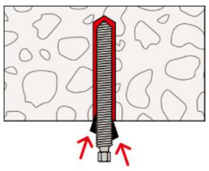	For overhead installations support the metal part with wedges (e.g. fischer centering wedges or fischer overhead clips).	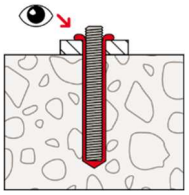	For push-through installation fill the annular gap with mortar.
13	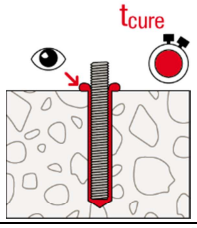	Wait for the specified curing time t_{cure} see **Table B7.2**. The application with the anchor rod is shown as an example.	**14** 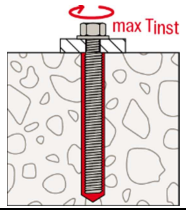	Mounting the fixture max T_{inst} see **Tables B3.1** and **B4.1**.
Option	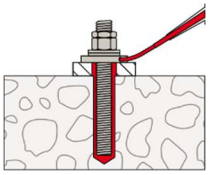	After the minimum curing time is reached, the gap between metal part and fixture (annular clearance) may be filled with mortar via the fischer filling disc. Compressive strength ≥ 50 N/mm² (e.g. fischer injection mortars FIS VB, FIS HB, FIS SB, FIS V Plus, FIS EM Plus). ATTENTION: Using fischer filling disc reduces t_{fix} (usable length of the Anchor).		

Table C1.1: Characteristic resistance to **steel failure** under **tension / shear loading** of **Anchor rods** and **Threaded rods**

Anchor rod / Threaded rod					M8	M10	M12	M16	M20
Characteristic resistance to steel failure under tension loading [1]									
Characteristic resistance $N_{Rk,s}$	Steel zinc plated	Property class	5.8	[kN]	18,3(16,6)	29,0(26,8)	42,1	78,5	122,5
			8.8		29,2(26,5)	46,4(42,8)	67,4	125,6	196,0
	Stainless steel R and high corrosion resistant steel HCR		50		18,3	29,0	42,1	78,5	122,5
			70		25,6	40,6	59,0	109,9	171,5
			80		29,2	46,4	67,4	125,6	196,0
Partial factors [2]									
Partial factor $\gamma_{Ms,N}$	Steel zinc plated	Property class	5.8	[-]	1,50				
			8.8		1,50				
	Stainless steel R and high corrosion resistant steel HCR		50		2,86				
			70		1,87 / fischer HCR: 1,50 [3]				
			80		1,60				
Characteristic resistance to steel failure under shear loading [1]									
without lever arm									
Characteristic resistance $V^0_{Rk,s}$	Steel zinc plated	Property class	5.8	[kN]	10,9(9,9)	17,4(16,0)	25,2	47,1	73,5
			8.8		14,6(13,2)	23,2(21,4)	33,7	62,8	98,0
	Stainless steel R and high corrosion resistant steel HCR		50		9,1	14,5	21,0	39,2	61,2
			70		12,8	20,3	29,5	54,9	85,7
			80		14,6	23,2	33,7	62,8	98,0
Ductility factor			k_7	[-]	1,0				
with lever arm									
Characteristic resistance $M^0_{Rk,s}$	Steel zinc plated	Property class	5.8	[Nm]	18,7(16,1)	37,3(33,2)	65,4	166,2	324,6
			8.8		29,9(25,9)	59,8(53,1)	104,6	265,9	519,3
	Stainless steel R and high corrosion resistant steel HCR		50		18,7	37,3	65,4	166,2	324,6
			70		26,2	52,3	91,5	232,6	454,4
			80		29,9	59,8	104,6	265,9	519,3
Partial factors [2]									
Partial factor $\gamma_{Ms,V}$	Steel zinc plated	Property class	5.8	[-]	1,25				
			8.8		1,25				
	Stainless steel R and high corrosion resistant steel HCR		50		2,38				
			70		1,56 / fischer HCR: 1,25 [3]				
			80		1,33				

[1] Values in brackets are valid for undersized threaded rods with smaller stress area A_s for hot dip galvanised threaded rods according to EN ISO 10684.
[2] In absence of other national regulations.
[3] Only admissible for high corrosion resistant steel HCR, acc. to **Table A5.1**.

Table C2.1: Characteristic resistance to **steel failure** under **tension / shear loading** of **fischer FIS IG**

fischer FIS IG					**M5**	**M6**	**M8**	**M10**	**M12**
Characteristic resistance to steel failure under tension loading									
Characteristic resistance with Screw or Threaded / Anchor rod $N_{Rk,s}$	Steel zinc plated	Property class of Screw or Threaded / Anchor rod	5.8	[kN]	7,1	10,1	18,3	29,0	42,1
			8.8		11,4	16,1	23,0	46,4	67,4
	Stainless steel R and high corrosion resistant steel HCR		70		9,9	14,1	25,6	40,6	59,0
Partial factors [1]									
Partial factor $\gamma_{Ms,N}$	Steel zinc plated	Property class of Screw or Threaded / Anchor rod	5.8	[-]	1,50				
			8.8		1,50				
	Stainless steel R and high corrosion resistant steel HCR		70		1,87 / fischer HCR: 1,50 [2]				
Characteristic resistance to steel failure under shear loading									
Without lever arm									
Characteristic resistance with Screw or Threaded / Anchor rod $V^0_{Rk,s}$	Steel zinc plated	Property class of Screw or Threaded / Anchor rod	5.8	[kN]	4,3	6,0	10,9	17,4	25,2
			8.8		5,7	8,0	14,6	23,2	33,7
	Stainless steel R and high corrosion resistant steel HCR		70		5,0	7,0	12,8	20,3	29,5
Ductility factor			k_7	[-]	1,0				
With lever arm									
Characteristic resistance with Screw or Threaded / Anchor rod $M^0_{Rk,s}$	Steel zinc plated	Property class of Screw or Threaded / Anchor rod	5.8	[Nm]	4,5	7,6	18,7	37,3	65,4
			8.8		7,2	12,2	29,9	59,8	104,6
	Stainless steel R and high corrosion resistant steel HCR		70		6,3	10,7	26,2	52,3	91,5
Partial factors [1]									
Partial factor $\gamma_{Ms,V}$	Steel zinc plated	Property class of Screw or Threaded / Anchor rod	5.8	[-]	1,25				
			8.8		1,25				
	Stainless steel R and high corrosion resistant steel HCR		70		1,56 / fischer HCR: 1,25 [2]				

[1] In absence of other national regulations.
[2] Only admissible for high corrosion resistant steel HCR, acc. to **Table A5.1**.

Table C3.1: Characteristic resistance to concrete failure under tension / shear loading

Anchor rod / Threaded rod			M8	M10	M12	M16	M20
fischer FIS IG			**M5**	**M6**	**M8**	**M10**	**M12**
Combined pullout and concrete cone failure							
Calculation diameter	d	[mm]	8	10	12	16	20
Characteristic resistance to concrete failure under tension loading							
Installation factor	γ_{inst}	[-]	See annex **C4**				
Factors for the compressive strength of concrete > C20/25							
Increasing factor ψ_c for uncracked concrete $\tau_{Rk\,(X,Y)} = \psi_c \cdot \tau_{Rk\,(C20/25)}$	C25/30	[-]	1,03				
	C30/37		1,06				
	C35/45		1,09				
	C40/50		1,11				
	C45/55		1,13				
	C50/60		1,15				
Splitting failure							
Edge distance	$h / h_{ef} \geq 2{,}0$	$c_{cr,sp}$ [mm]	$1{,}0\ h_{ef}$				
	$2{,}0 > h / h_{ef} > 1{,}3$		$4{,}6\ h_{ef} - 1{,}8\ h$				
	$h / h_{ef} \leq 1{,}3$		$2{,}1\ h_{ef}$				
Spacing	$s_{cr,sp}$	[mm]	$2\ c_{cr,sp}$				
Concrete failure							
Uncracked concrete	$k_{ucr,N}$	[-]	11,0				
Edge distance	$c_{cr,N}$	[mm]	$1{,}5\ h_{ef}$				
Spacing	$s_{cr,N}$		$2\ c_{cr,N}$				
Factors for sustained tension loading							
Factor Ψ^0_{sus} for temperature range	24 °C / 40 °C	[-]	0,55				
	50 °C / 80 °C		0,55				
Characteristic resistance to concrete failure under shear loading							
Installation factor	γ_{inst}	[-]	1,0				
Concrete pry-out failure							
Factor for pry-out failure	k_8	[-]	2,0				
Concrete edge failure							
Effective length of fastener in shear loading	l_f	[mm]	for $d_{nom} \leq 24$ mm: min (h_{ef}; 12 d_{nom})				
Calculation diameters							
Size			M5	M6	M8	M10	M12	M16	M20
Anchor rods and Threaded rods	d_{nom}	[mm]	-[1)]	-[1)]	8	10	12	16	20
fischer FIS IG	d_{nom}		8	10	12	16	20	-[1)]	-[1)]

[1)] Size of Anchor type not part of the assessment

Table C4.1: Characteristic resistance to **combined pull-out** and **concrete failure** for **Anchor rods** and **Threaded rods** and **fischer FIS IG** in hammer drilled holes; **uncracked concrete C20/25**

Anchor rod / Threaded rod			**M8**	**M10**	**M12**	**M16**	**M20**
fischer FIS IG			**M5**	**M6**	**M8**	**M10**	**M12**
Combined pullout and concrete cone failure							
Calculation diameter	d	[mm]	8	10	12	16	20
Uncracked concrete							
Characteristic bond resistance in uncracked concrete C20/25							
Hammer-drilling with standard drill bit (dry or wet concrete)							
Temperature range I: 24 °C / 40 °C	$\tau_{Rk,ucr}$	[N/mm²]	9,9	9,9	9,9	9,9	10,8
Temperature range II: 50 °C / 80 °C	$\tau_{Rk,ucr}$	[N/mm²]	8,6	8,6	8,6	8,6	9,2
Installation factors							
Dry or wet concrete	γ_{inst}	[-]	1,2				1,4

Table C5.1: Displacement for **Anchor rods / Threaded rods or fischer FIS IG**					
Anchor rod / Threaded rod		**M8**	**M10**	**M12**	**M16**	**M20**
fischer FIS IG		**M5**	**M6**	**M8**	**M10**	**M12**
Displacement-Factors for tension loading[1)]						
Uncracked concrete; Temperature range I, II						
$\delta_{N0\text{-Factor}}$	[mm/(N/mm²)]	0,043	0,024	0,027	0,028	0,037
$\delta_{N\infty\text{-Factor}}$		0,023	0,023	0,023	0,023	0,023
Displacement-Factors for shear loading[2)]						
Uncracked concrete; Temperature range I, II						
$\delta_{N0\text{-Factor}}$	[mm/kN]	0,15	0,13	0,11	0,08	0,06
$\delta_{N\infty\text{-Factor}}$		0,23	0,19	0,16	0,12	0,09

1) Calculation of effective displacement:

$\delta_{N0} = \delta_{N0\text{-Factor}} \cdot \tau$

$\delta_{N\infty} = \delta_{N\infty\text{-Factor}} \cdot \tau$

τ = acting bond strength under tension loading

2) Calculation of effective displacement:

$\delta_{V0} = \delta_{V0\text{-Factor}} \cdot V$

$\delta_{V\infty} = \delta_{V\infty\text{-Factor}} \cdot V$

V = acting shear loading