ДЕКЛАРАЦИЯ ЗА ЕКСПЛОАТАЦИОННИ ПОКАЗАТЕЛИ

DoP 0255
за fischer FIF - CN II (Пластмасови анкери за употреба в бетон и мазилки) BG

1. Уникален идентификационен код на типа продукт: **DoP 0255**

2. Предвидена употреба/употреби: **Набивен пластмасов дюбел комплект с пирон за фиксиране на външни топлоизолационни композитни системи (ЕТИС) с мазилка в бетон и зидария, виж Приложението, по-специално Приложения B1- B3.**

3. Производител: **fischerwerke GmbH & Co. KG, Klaus-Fischer-Str. 1, 72178 Waldachtal, Германия**

4. Упълномощен представител: **–**

5. Система/системи за оценяване и проверка на постоянството на експлоатационните показатели: **2+**

6. Европейски документ за оценяване: **EAD 330196-01-0604**
   Европейска техническа оценка: **ETA-18/0393; 2018-05-29**
   Орган за техническа оценка: **DIBt- Deutsches Institut für Bautechnik**
   Нотифициран орган/органи: **2873 TU Darmstadt**

7. Декларирани експлоатационни показатели:

Безопасност при употреба (BWR 4)

Характерна товароносимост:	**Характерна устойчивост при усилия на опън:**	**Приложение C1**
	Минимално отстояние от ръба:	**Приложение B2**
	Минимално междуосово разстояние:	**Приложение B2**
измествания:	**Натоварване на опън с частичен фактор:**	**Приложение C1**
	измествания:	**Приложение C1**
Твърдост на плочата:	**Диаметър на шайбата, на дюбела:**	**Приложение C1**
	Устойчивост на натоварване, на закрепената плоча:	**Приложение C1**
	Твърдост на плочата:	**Приложение C1**

Икономия на енергия и задържане на топлина (BWR 6)

Топлинна пропускливост:	**Точкова топлопропускливост на дюбела:**	**Приложение C1**
	Дебелина на изолационната плоча, на ЕТИС:	**Приложение C1**

8. Подходяща техническа документация и/или специфична техническа документация: **–**

Експлоатационните показатели на продукта, посочени по-горе, са в съответствие с декларираните експлоатационни показатели. Настоящата декларация за експлоатационни показатели се издава в съответствие с Регламент (ЕС) № 305/2011, като отговорността за нея се носи изцяло от посочения по-горе

Подписано за и от името на производителя от:

Dr. Oliver Geibig, Управляващ директор Бизнес звена и инженеринг

Jürgen Grün, Управляващ директор Химически крепежи и Качество

Tumlingen, 2021-01-15

Тази Декларация за съответствие е изготвена на различни езици. В случай, че възникне спор, относно интерпретирането, трябва да се вземе предвид английската версия.

Приложението съдържа доброволна и допълнителна информация на английски език в обем и съдържание, надхвърлящи (независимо от езика) законовите изисквания.

Specific Part

1 Technical description of the product

The fischer FIF-CN II consists of an anchor sleeve with an enlarged shaft made of polypropylene (virgin material), an insulation plate made of glass fibre reinforced polyamide (virgin material) and a specific compound nail (for FIF-CN II 60-180) made of glass fibre reinforced polyamide with galvanized steel or a specific nail (for FIF-CN II 200-340) made of galvanised steel which is installed together with a plastic cylinder made of glass fibre reinforced polyamide.

The anchor may in addition be combined with the slip-on-plate DT 90, DT 110 and DT 140.

The product description is given in Annex A.

2 Specification of the intended use in accordance with the applicable European Assessment Document

The performances given in Section 3 are only valid if the anchor is used in compliance with the specifications and conditions given in Annex B.

The verification and assessment methods on which this European Technical Assessment is based lead to the assumption of a working life of the anchor of at least 25 years. The indications given on the working life cannot be interpreted as a guarantee given by the producer, but are to be regarded only as a means for choosing the right products in relation to the expected economically reasonable working life of the works.

3 Performance of the product and references to the methods used for its assessment

3.1 Safety and accessibility in use (BWR 4)

Essential characteristic	Performance
Characteristic tension resistance	See Annex C 1
Edge distances and spacing	See Annex B 2
Plate stiffness	See Annex C 1
Displacements	See Annex C 1

3.2 Energy economy and heat retention (BWR 6)

Essential characteristic	Performance
Point thermal transmittance	See Annex C 1

4 Assessment and verification of constancy of performance (AVCP) system applied, with reference to its legal base

In accordance with EAD No. 330196-01-0604, the applicable European legal act is: [97/463/EC].

The system to be applied is: 2+

Installed anchor: FIF-CN II / 60-180

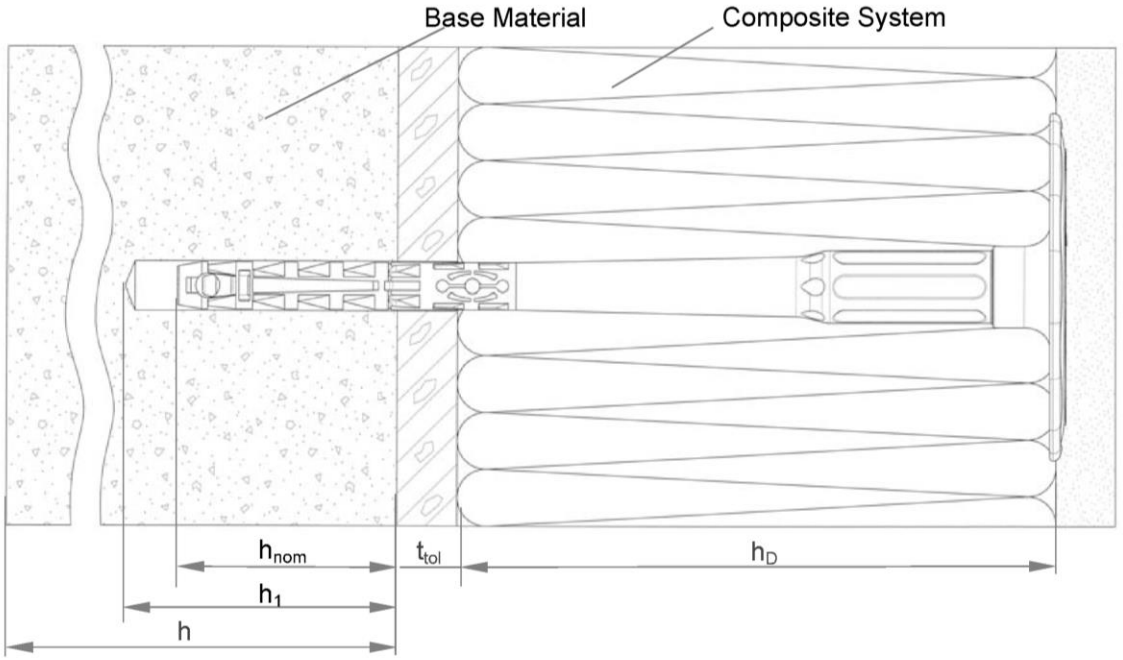

FIF-CN II / 200-340

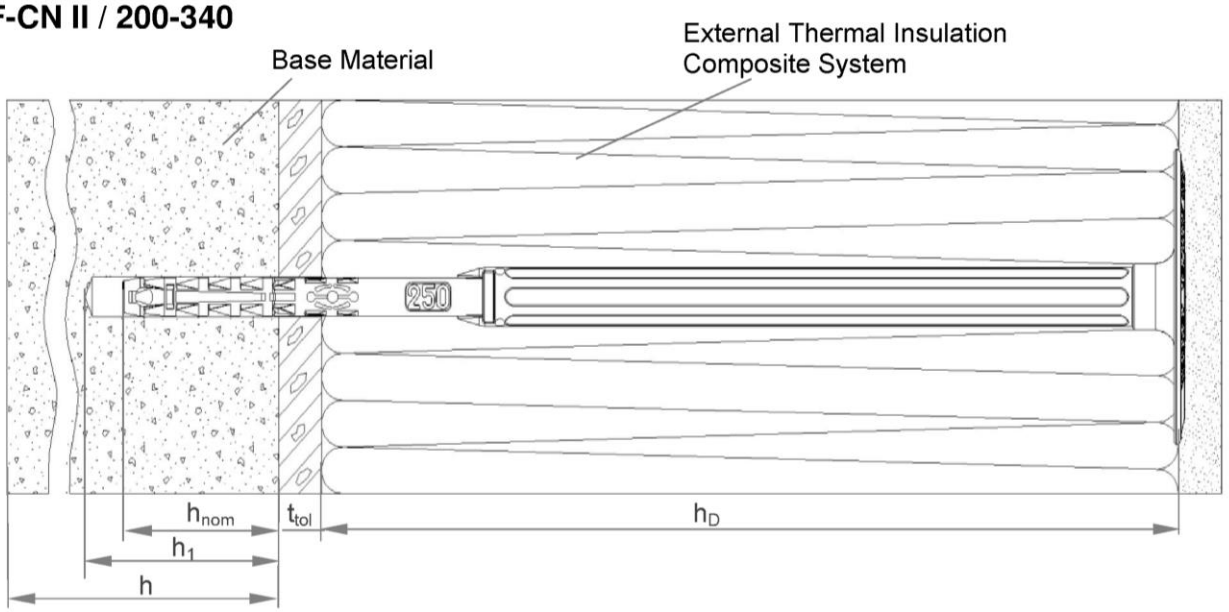

Legend

h_{nom}	=	Overall plastic anchor embedment depth in the base material
h_1	=	Depth of drilled hole to deepest point
h	=	Thickness of member (wall)
h_D	=	Thickness of insulation material
t_{tol}	=	Thickness of equalizing layer or non–load bearing coating

Figures not to scale

fischer FIF-CN II

Product description
Installed anchor

Annex A 1

Single parts: FIF-CN II / 60-180

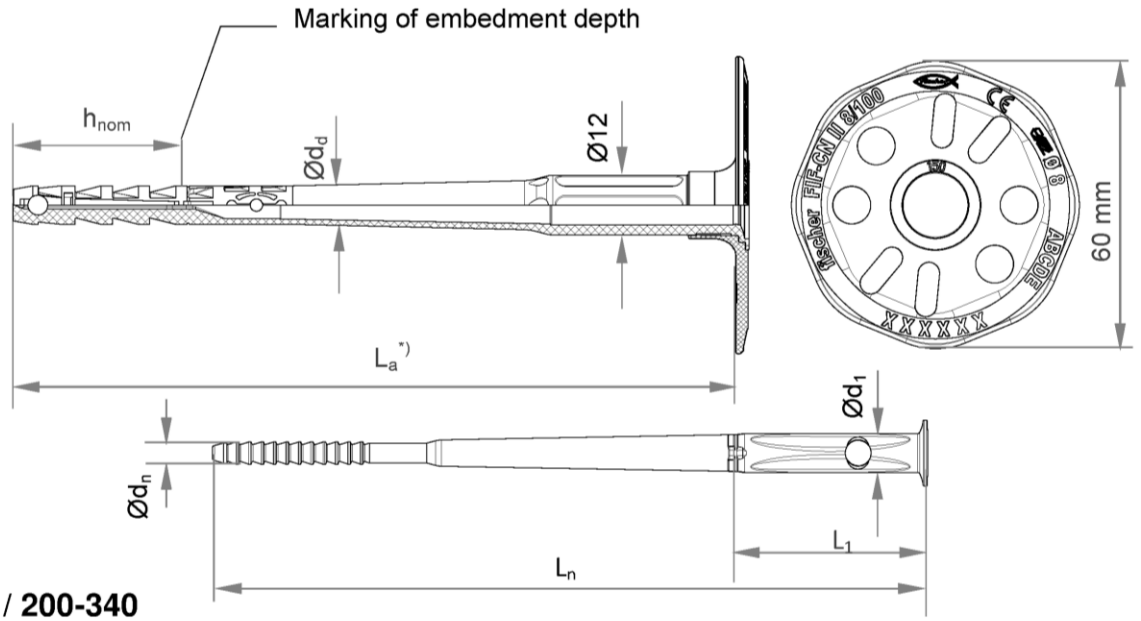

FIF-CN II / 200-340

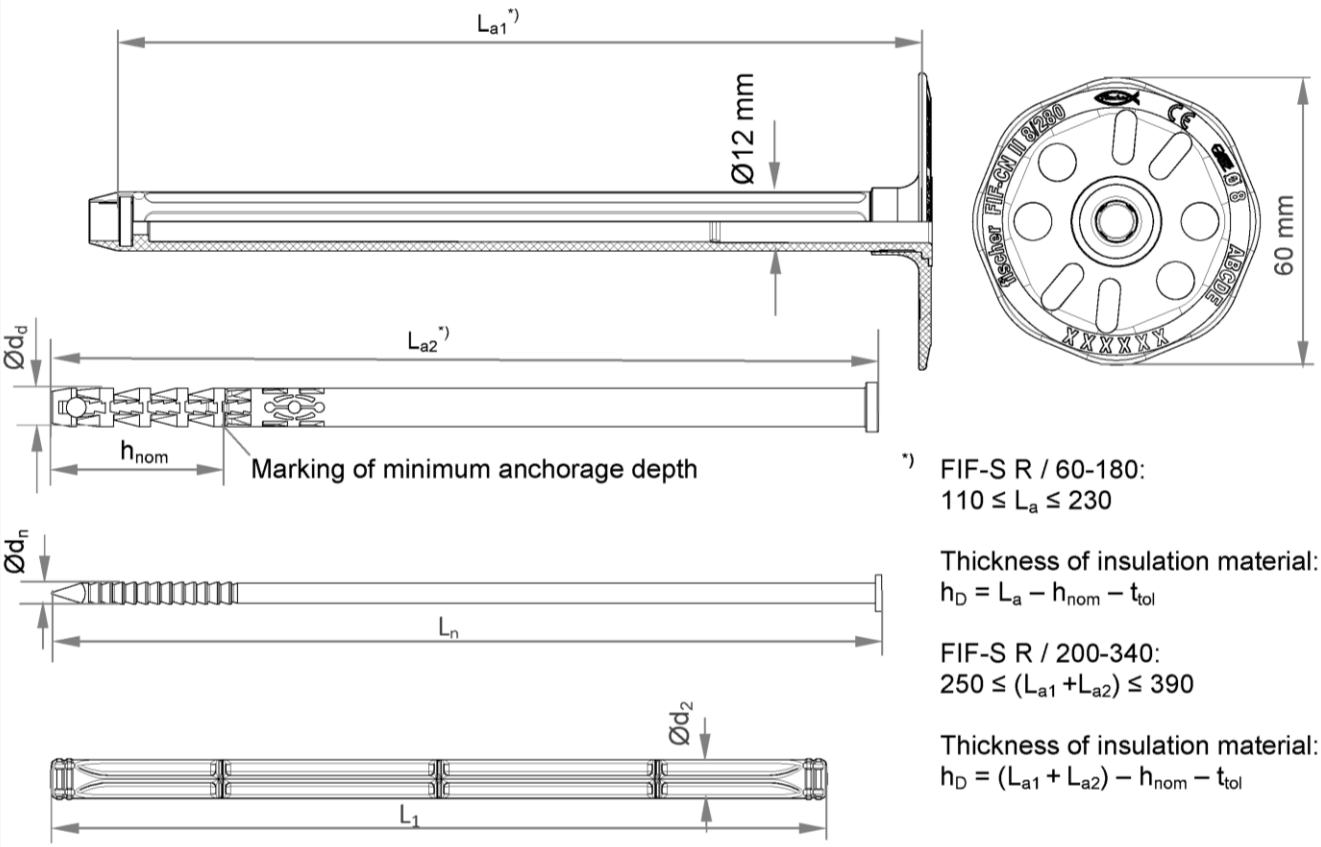

*) FIF-S R / 60-180:
$110 \leq L_a \leq 230$

Thickness of insulation material:
$h_D = L_a - h_{nom} - t_{tol}$

FIF-S R / 200-340:
$250 \leq (L_{a1} + L_{a2}) \leq 390$

Thickness of insulation material:
$h_D = (L_{a1} + L_{a2}) - h_{nom} - t_{tol}$

Figures not to scale

fischer FIF-CN II	**Annex A 2**
Product description Marking and dimensions of the anchor	Appendix 3 / 8

Table A3.1: Marking

Anchor type	FIF-CN II
Name and size of anchor	FIF-CN II 8
Thickness of insulation material	60, 80, 100, 120, … 340
Example	fischer FIF-CN II 8/100 or or blank CE (optional) Ø 8 (optional) ABCDE

Table A3.2: Dimensions

Anchor type	Anchor sleeve				Specific nail			Plastic cylinder	
	$Ø\ d_d$	h_{nom}	$L_{a,min}$	$L_{a,max}$	$Ø\ d_n$	L_n	$Ø\ d_1$	L_1	$Ø\ d_2$
	[mm]								
FIF-CN II 60-180	8	35	110	230	4,5	L_a - 4	8	40	-
FIF-CN II 200-340	8	35	250	390	4,5	$(L_{a1} + L_{a2}) – L_1$ - 4		157	8

Table A3.3: Materials

Designation	Material
Anchor sleeve	PP (virgin material), colour: grey
Shaft (FIF-CN II / 200-340)	PA6 (virgin material) GF, colour: grey
Plastic cylinder (FIF-CN II / 60 – 180)	PA6 (virgin material) GF, colour: nature
Specific compound nail (FIF-CN II / 60-180) o Specific nail (FIF-CN II / 200-340)	PA6 (virgin material) GF, steel gal Zn A2G or A2F acc.to EN ISO 4042:2001-01 Steel gal Zn A2G or A2F acc. to EN ISO 4042:2001-01
Anchor plate	PA6 (virgin material) GF, colour: grey

Slip-on-plate combined with FIF-CN II

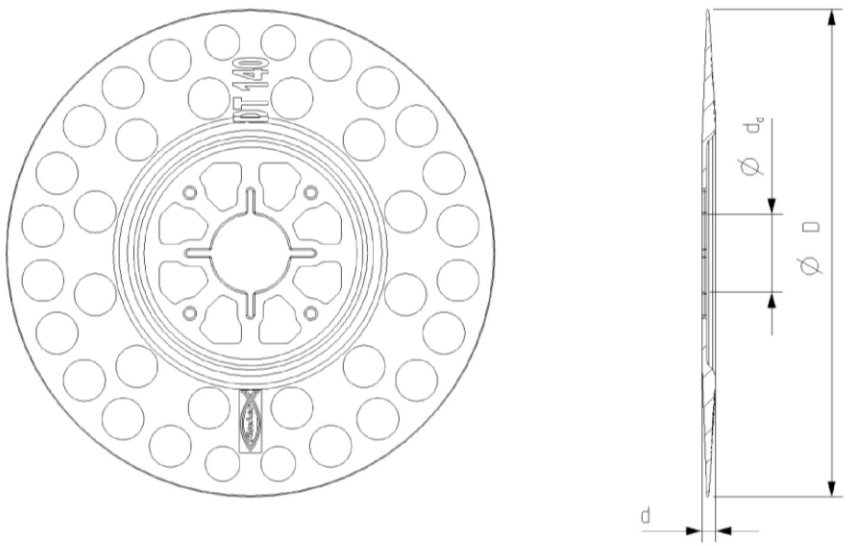

Table A3.4: Slip-on-plate, diameters and material

Slip-on-plate	Ø D	Ø d_d	d	Material
	[mm]			
DT 90 / 110 / 140	90 / 110 / 140	22,5	3,9	PA6 GF

Figures not to scale

fischer FIF-CN II

Product description
Marking, dimensions, materials, slip-on plates combined with FIF-CN II

Annex A 3

Specifications of intended use

Anchorages subject to:

- The anchor may only be used for transmission of wind suction loads and shall not be used for the transmission of dead loads of the thermal insulation composite system.

Base materials:

- Normal weight concrete (use category A), according to Annex C1.
- Solid masonry (use category B), according to Annex C1.
- Hollow or perforated masonry (use category C), according to Annex C1.
- Lightweight aggregate concrete (use category D), according to Annex C1.
- Autoclaved aerated concrete (use category E), according to Annex C1.
- For other base materials of the use categories A, B, C, D and E the characteristic resistance of the anchor may be determined by job site tests acc. to EOTA Technical Report TR 051 Edition December 2016.

Temperature Range:

- 0 °C to + 40 °C (max. short term temperature +40°C and max. long term temperature +24°C).

Design:

- The anchorages are designed under the responsibility of an engineer experienced in anchorages and masonry work with the partial safety factors γ_M = 2,0 and γ_F = 1,5, if there are no other national regulations.
- Verifiable calculation notes and drawings are prepared taking account of the loads to be anchored. The position of the anchors is indicated on the design drawings.
- Fasteners are only to be used for multiple fixings of the ETICS.

Installation:

- Hole drilling by the drill modes according to Annex C1.
- Anchor installation carried out by appropriately qualified personnel and under the supervision of the person responsible for technical matters on the site.
- Installation temperature from 0 °C to + 40 °C
- Exposure to UV due to solar radiation of the anchor not protected by rendering ≤ 6 weeks.

Table B2.1: Installation parameters

Anchor type				FIF-CN II
Drill hole diameter	d_0	=	[mm]	8
Cutting diameter of drill bit	d_{cut}	≤		8,45
Depth of drill hole to deepest point	h_1	≥		45 / 65[1)]
Overall plastic anchor embedment depth in the base material	h_{nom}	≥		35 / 55[1)]

[1)] only for use cat. "D" and "E"

Table B2.2: Minimum thickness, distance and spacing

Anchor type				FIF-CN II
Minimum thickness of member	h_{min}	=	[mm]	100
Minimum spacing	s_{min}			100
Minimum edge distance	c_{min}			100

Anordnung Achs- und Randabstände

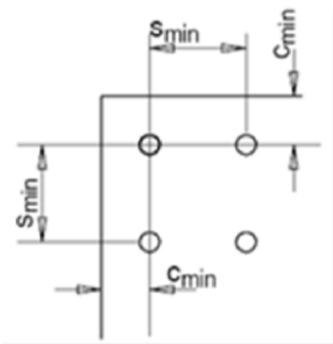

Figures not to scale

fischer FIF-CN II

Intended use
Installation parameters, edge distances and spacings

Annex B 2

Installation instructions:

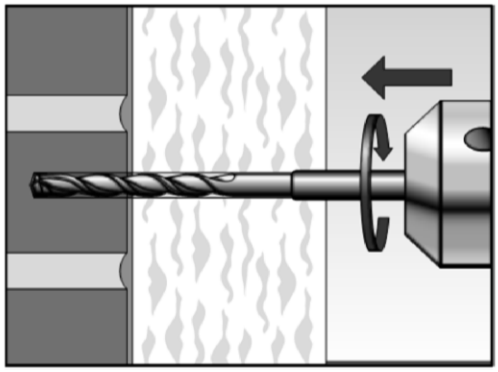

1. Drill the bore hole by the parameters acc. to Table B2.1 and the corresponding drilling method acc. to Annex C 1.

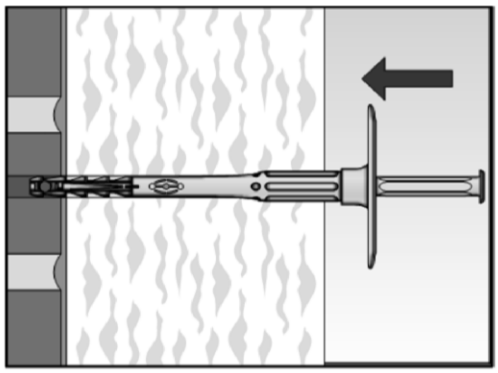

2. Insert anchor manually.

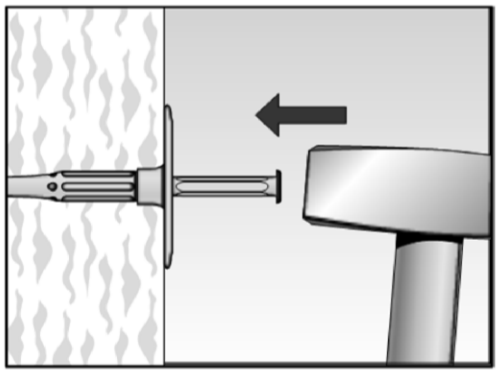

3. Set anchor by hammer blows. The bottom side of the plate must be flush with the ETICS.

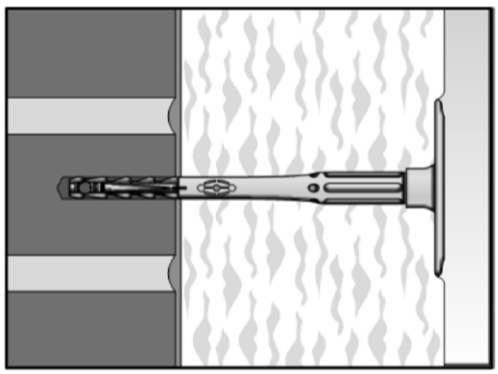

4. Correctly installed anchor.

Figures not to scale

Table C1.1: Characteristic resistance N_{Rk} in concrete and masonry for a single anchor

Base material	Use cat.	Bulk density class ρ [kg/dm³]	Min. compressive strength f_b [N/mm²]	Remarks	Drill method [1)]	Characteristic resistance FIF-CN II N_{RK} [kN]
Concrete ≥ C12/15 – C50/60 acc.to EN 206-1:2000	A				H	**0,75**
Clay brick Mz, acc. to EN 771-1:2011	B	≥ 2,0	12	Cross section reduced up to 15% by perforation vertically to the resting area	H	**0,75**
Vertically perforated clay bricks **Hlz**, acc. to EN 771-1:2011	C	≥ 1,0	12	Cross section between 15 % and 50 % by perforation vertically to the resting area. Outer web thickness ≥ 12 mm	R	**0,5**
Lightweight aggregate concrete, **LAC**, acc. to EN 1520:2011	D	≥ 0,8	6	Minimum solid brick or minimum exterior web thickness t ≥ 50 mm	H	**0,5**
Autoclaved aerated concrete blocks **AAC,** acc. to EN 771-4:2011, h_{nom} = 35mm	E	≥ 0,4	4	-	R	**0,3**

[1)] H = Hammer drilling R = Rotary drilling

Table C1.2: Point thermal transmittance acc. to EOTA Technical Report TR 025: 2016-05

Anchor type	**Thickness of insulation material h_D [mm]**	**Point thermal transmittance χ [W/K]**
FIF-CN II / 60-180	60	0,001
	80 - 180	0,000
FIF-CN II / 200-340	200 - 300	0,000
	320 - 340	0,001

Table C1.3: Plate stiffness acc. to EOTA Technical Report TR 026: 2016-05

Anchor plate	**Size of the anchor plate [mm]**	**Load resistance of the anchor plate [kN]**	**Plate stiffness [kN/mm]**
FIF-CN II	60	1,63	0,63

Table C1.4: Displacements of the FIF-CN II

Base material	**Tension load F [kN]**	**Displacements δ [mm]**
Concrete C12/15 – C50/60 (EN 206-1:2000)	0,25	< 0,3
Clay brick, **Mz 12** (EN 771-1:2011)	0,25	< 0,5
Vertically perforated clay brick, **Hlz 12** (EN 771-1:2011)	0,17	< 0,2
Lightweight aggregate concrete, **LAC 6** (EN 1520:2011)	0,17	< 0,3
Autoclaved aerated concrete blocks, **AAC 4** (EN 771-4:2011)	0,10	< 0,2