ДЕКЛАРАЦИЯ ЗА ЕКСПЛОАТАЦИОННИ ПОКАЗАТЕЛИ

DoP 0336

за анкерни канали на Fischer InnoLock FES-RS-S с болтове за канал Fischer FBC-S (Анкерни канали за използване в бетон) BG

1. Уникален идентификационен код на типа продукт: **DoP 0336**

2. Предвидена употреба/употреби: **Анкерни канали за използване в напукан и ненапукан бетон, виж Приложението, по-специално Приложения B1- B6.**

3. Производител: **fischerwerke GmbH & Co. KG, Klaus-Fischer-Str. 1, 72178 Waldachtal, Германия**

4. Упълномощен представител: **–**

5. Система/системи за оценяване и проверка на постоянството на експлоатационните показатели: **1**

6. Европейски документ за оценяване: **EAD 330008-03-0601, Edition 06/2021**
   Европейска техническа оценка: **ETA-22/0035; 2022-08-01**
   Орган за техническа оценка: **DIBt- Deutsches Institut für Bautechnik**
   Нотифициран орган/органи: **2873 TU Darmstadt**

7. Декларирани експлоатационни показатели:

Механична устойчивост и здравина (BWR 1)

Характерна носимоспособност на опън (за статично и квази статично действие):

1) Устойчивост на разрушаване на стомната, на анкерите: Приложения C1
2) Устойчивост на разрушаване на стоманата, на връзката между анкерите и канала: Приложения C1
3) Устойчивост на разрушаване на стоманата, на устните на канала и последващо издърпване на каналният болт: Приложения C1
4) Устойчивост на разрушаване на стоманата, на каналният болт: Приложения C6
5) Устойчивост на разрушаване на стоманата, чрез превишаване на якостта на огъване на канала: Приложения A5, C1
6) Максимален въртящ момент на монтаж, за да се избегнат повреди по време на монтажа: Приложения B4
7) Устойчивост на разрушаване при измъкване на анкера: Приложения C2
8) Товароустойчивост при при отказ от излизане на бетонния конус: Приложения B3, C2
9) Минимално разстояние до ръба, разстояние, дебелина на елемента, за да се предотврати спукването на бетона по време на монтажа: Приложения A5, B3
10) Характерно разстояние до ръба и междуосови разстояние, за да се избегне спукването на бетона под товар: Приложения C2
11) Устойчивост на повреда на носещата зона на главата: Приложения A4

Характерна носимоспособност на сряз (за статично и квази статично действие):

12) Устойчивост на разрушаване на стоманата на анкерния болт при срязващо натоварване без лостово рамо: Приложения C6
13) Устойчивост на разрушаване на стомана чрез огъване на болта на канала при срязващо натоварване с лостово рамо: Приложения
14) Устойчивост на разрушаване на стоманата, на устните на канала, разрушаване на стоманта при повреда на връзката между анкера и канала или разрушаване на стоманата при повреда на анкерния канал (срязващо натоварване в напречна посока) Приложения C4
15) Устойчивост на разрушаване на стоманата, на връзката между устните на канала и болта на канала (срязващо натоварване в надлъжната ос на канала): Приложение C5
16) Фактор за чувствителност на инсталацията: Приложение C5
17) Устойчивост на разрушаване стоманата на анкера: Приложение C4
18) Устойчивост на разрушаване на стоманата на връзката между анкера и канала: Приложение C4
19) Устойчивост на отказ при отклонение: Приложение C5
20) Устойчивост на разрушаване на бетонния ръб: Приложения C5

Характеристична устойчивост при комбинирано статично и квази-статично натоварване на опън и срязване

21) Устойчивост на разрушаване на стоманата, на анкерния канал: Приложения C6

Характерна устойчивост при натоварване от напрежение от умора:

22) Устойчивост на умора, на разрушаване на стомана, на цялата система (непрекъсната или трилинейна функция) NPD
23) Устойчивост на границата, на умора, на разрушаване на стоманата на цялата система NPD
24) Устойчивост на умора, свързана при разрушаване на бетона (експоненциална функция) NPD
25) Устойчивост на границата, на умора при разрушаване на бетона NPD
26) измествания: Приложения C3, C6

Пожарна безопасност (BWR 2)

27) Реакция на огън: Клас (A1)
28) Пожароустойчивост: NPD

трайност:

29) трайност: Приложения A7, B1

8. Подходяща техническа документация и/или специфична техническа документация: --

Експлоатационните показатели на продукта, посочени по-горе, са в съответствие с декларираните експлоатационни показатели. Настоящата декларация за експлоатационни показатели се издава в съответствие с Регламент (ЕС) № 305/2011, като отговорността за нея се носи изцяло от посочения по-горе производител.

Подписано за и от името на производителя от:

Dr.-Ing. Oliver Geibig, Управляващ директор Бизнес звена и инженеринг

Jürgen Grün, Управляващ директор Химия и качество

Tumlingen, 2023-07-25

Тази Декларация за съответствие е изготвена на различни езици. В случай, че възникне спор, относно интерпретирането, трябва да се вземе предвид английската версия.

Приложението съдържа доброволна и допълнителна информация на английски език в обем и съдържание, надхвърлящи (независимо от езика) законовите изисквания.

Translation guidance Essential Characteristics and Performance Parameters for Annexes

Насоки за превод Основни характеристики и експлоатационни параметри на приложенията

Mechanical resistance and stability (BWR 1) **Механична устойчивост и здравина (BWR 1)**		
Characteristic resistance to tension load (static and quasi-static loading): **Характерна носимоспособност на опън (за статично и квази статично действие):**		
1	Resistance to steel failure of anchors: **Устойчивост на разрушаване на стомната, на анкерите:**	$N_{Rk,s,a}$
2	Resistance to steel failure of the connection between anchors and channel: **Устойчивост на разрушаване на стоманата, на връзката между анкерите и канала:**	$N_{Rk,s,c}$
3	Resistance to steel failure of channel lips and sunsequently pullout of channel bolt: **Устойчивост на разрушаване на стоманата, на устните на канала и последващо издърпване на каналният болт:**	$N^0_{Rk,s,l}$; $s_{l,N}$
4	Resistance to steel failure of channel bolt: **Устойчивост на разрушаване на стоманата, на каналният болт:**	$N_{Rk,s}$
5	Resistance to steel failure by exceeding the bending strength of the channel: **Устойчивост на разрушаване на стоманата, чрез превишаване на якостта на огъване на канала:**	$M_{Rk,s,flex}$; s_{max}
6	Maximum installation torque moment to avoid damage during installation: **Максимален въртящ момент на монтаж, за да се избегнат повреди по време на монтажа:**	$T_{inst,g}$; ($T_{inst,s}$)
7	Resistance to pull-out failure of the anchor: **Устойчивост на разрушаване при измъкване на анкера:**	$N_{Rk,p}$
8	Resistance to concrete cone failure: **Товароустойчивост при при отказ от излизане на бетонния конус:**	$k_{cr,N}$; $k_{ucr,N}$; h_{ef}
9	Minimum edge distance, spacing, member thickness to prevent concrete splitting during installation: **Минимално разстояние до ръба, разстояние, дебелина на елемента, за да се предотврати спукването на бетона по време на монтажа:**	s_{min}; c_{min}; h_{min}
10	Characteristic edge distance and spacing to avoid splitting of concrete under load: **Характерно разстояние до ръба и междуосови разстояние, за да се избегне спукването на бетона под товар:**	$s_{cr,sp}$; $c_{cr,sp}$
11	Resistance to blowout failure- bearing area of head: **Устойчивост на повреда на носещата зона на главата:**	A_h
Characteristic resistance to shear load (static and quasi-static loading): **Характерна носимоспособност на сряз (за статично и квази статично действие):**		
12	Resistance to steel failure of channel bolt under shear loading without lever arm: **Устойчивост на разрушаване на стоманата на анкерния болт при срязващо натоварване без лостово рамо:**	$V_{Rk,s}$
13	Resistance to steel failure by bending of the channel bolt under shear load with lever arm: **Устойчивост на разрушаване на стомана чрез огъване на болта на канала при срязващо натоварване с лостово рамо:**	$M^0_{Rk,s}$
14	Resistance to steel failure of channel lips, steel failure of connection between anchor and channel or steel failure of anchor (shear load in transverse direction): **Устойчивост на разрушаване на стоманата, на устните на канала, разрушаване на стоманта при повреда на връзката между анкера и канала или разрушаване на стоманата при повреда на анкерния канал (срязващо натоварване в напречна посока)**	$V^0_{Rk,s,l,y}$; $s_{l,V}$; $V_{Rk,s,c,y}$; $V_{Rk,s,a,y}$
15	Resistance to steel failure of connection between channel lips and channel bolt (shear load in longitudinal channel axis): **Устойчивост на разрушаване на стоманата, на връзката между устните на канала и болта на канала (срязващо натоварване в надлъжната ос на канала):**	$V_{Rk,s,l,x}$
16	Factor for sensistivity to installation: **Фактор за чувствителност на инсталацията:**	γ_{inst}
17	Resistance to steel failure of the anchor: **Устойчивост на разрушаване стоманата на анкера:**	$V_{Rk,s,a,x}$
18	Resistance to steel failure of connection between anchor and channel: **Устойчивост на разрушаване на стоманата на връзката между анкера и канала:**	$V_{Rk,s,c,x}$
19	Resistance to concrete pry-out failure: **Устойчивост на отказ при отклонение:**	k_8
20	Resistance to concrete edge failure: **Устойчивост на разрушаване на бетонния ръб:**	$k_{cr,V}$; $k_{ucr,V}$
Characteristic resistance under combined static and quasi-static tension and shear loading **Характеристична устойчивост при комбинирано статично и квази-статично натоварване на опън и срязване**		
21	Resistance to steel failure of the anchor channel: **Устойчивост на разрушаване на стоманата, на анкерния канал:**	k_{13}, k_{14}
Characteristic resistance under fatigue tension loading: **Характерна устойчивост при натоварване от напрежение от умора:**		
22	Fatigue resistance to steel failure of the whole system (continuous or tri-linear function): **Устойчивост на умора, на разрушаване на стомана, на цялата система (непрекъсната или трилинейна функция)**	$\Delta N_{Rk,s,0,n}$ (n=1 to n=∞)
23	Fatigue limit resistance to steel failure of the whole system: **Устойчивост на границата, на умора, на разрушаване на стоманата на цялата система**	$\Delta N_{Rk,s,0,\infty}$
24	Fatigue resistance to concrete related failure (exponential function): **Устойчивост на умора, свързана при разрушаване на бетона (експоненциална функция)**	$\Delta N_{Rk,c,0,n}$; $\Delta N_{Rk,p,0,n}$ (n=1 to n=∞)
25	Fatigue limit resistance to concrete related failure: **Устойчивост на границата, на умора при разрушаване на бетона**	$\Delta N_{Rk,c,0,\infty}$; $\Delta N_{Rk,p,0,\infty}$
26	Displacements: **измествания:**	δ_{N0}; $\delta_{N\infty}$; $\delta_{V,y,0}$; $\delta_{V,y,\infty}$ $\delta_{V,x,0}$; $\delta_{V,x,\infty}$
Safety in case of fire (BWR 2) **Пожарна безопасност (BWR 2)**		
27	Reaction to fire: **Реакция на огън:**	Class
28	Resistance to fire: **Пожароустойчивост:**	$N_{Rk,s,fi}$; $V_{Rk,s,fi}$
Durability: **трайност:**		
29	Durability: **трайност:**	Descritpion

Specific Part

1 Technical description of the product

The fischer Serrated Anchor Channel InnoLock FES-RS-S with fischer Serrated Channel Bolts FBC-S is a system consisting of a C-shaped channel profile of steel and at least two metal anchors non-detachably fixed on the channel back and fischer Serrated Channel Bolts.

The anchor channel is embedded surface-flush in the concrete. fischer Serrated Channel Bolts with appropriate hexagonal nuts and washers are fixed to the channel.

The product description is given in Annex A.

2 Specification of the intended use in accordance with the applicable European Assessment Document

The performances given in Section 3 are only valid if the anchor channel is used in compliance with the specifications and conditions given in Annex B.

The verifications and assessment methods on which this European Technical Assessment is based lead to the assumption of a working life of the anchor channel of at least 50 years. The indications given on the working life cannot be interpreted as a guarantee given by the producer, but are to be regarded only as a means for choosing the right products in relation to the expected economically reasonable working life of the works.

3 Performance of the product and references to the methods used for its assessment

3.1 Mechanical resistance and stability (BWR 1)

Essential characteristic	Performance
Characteristic resistance under tension load (static and quasi-static loading)	
- Resistance to steel failure of anchors	$N_{Rk,s,a}$ see Annex C1
- Resistance to steel failure of the connection between anchors and channel	$N_{Rk,s,c}$ see Annex C1
- Resistance to steel failure of channel lips and subsequently pull-out of channel bolt	$N^0_{Rk,s,l}$; $s_{l,N}$ see Annex C1
- Resistance to steel failure of channel bolt	$N_{Rk,s}$ see Annex C6
- Resistance to steel failure by exceeding the bending strength of the channel	s_{max} see Annex A5 $M_{Rk,s,flex}$ see Annex C1
- Maximum installation torque to avoid damage during installation	$T_{inst,g}$; $T_{inst,s}$ see Annex B4
- Resistance to pull-out failure of the anchor	$N_{Rk,p}$ see Annex C2
- Resistance to concrete cone failure	h_{ef} see Annex B3 $k_{cr,N}$; $k_{ucr,N}$ see Annex C2
- Minimum edge distances, spacing and member thickness to avoid concrete splitting during installation	s_{min} see Annex A5 c_{min} ; h_{min} see Annex B3
- Characteristic edge distance and spacing to avoid splitting of concrete under load	$s_{cr,sp}$; $c_{cr,sp}$ see Annex C2
- Resistance to blowout failure - bearing area of anchor head	A_h see Annex A4

Essential characteristic	Performance
Characteristic resistance under shear load (static and quasi-static loading)	
- Resistance to steel failure of channel bolt under shear loading without lever arm	$V_{Rk,s}$ see Annex C6
- Resistance to steel failure by bending of the channel bolt under shear load with lever arm	$M^0_{Rk,s}$ see Annex C7
- Resistance to steel failure of channel lips, steel failure of connection between anchor and channel and steel failure of anchor (shear load in transverse direction)	$V^0_{Rk,s,l,y}$; $s_{l,V}$; $V_{Rk,s,c,y}$; $V_{Rk,s,a,y}$ see Annex C4
- Resistance to steel failure of connection between channel lips and channel bolt (shear load in longitudinal channel axis)	$V_{Rk,s,l,x}$ see Annex C5
- Factor for sensitivity to installation (longitudinal shear)	γ_{inst} see Annex C5
- Resistance to steel failure of the anchor (longitudinal shear)	$V_{Rk,s,a,x}$ see Annex C4
- Resistance to steel failure of connection between anchor and channel (longitudinal shear)	$V_{Rk,s,c,x}$ see Annex C4
- Resistance to concrete pry-out failure	k_8 see Annex C5
- Resistance to concrete edge failure	$k_{cr,V}$; $k_{ucr,V}$ see Annex C5
Characteristic resistance under combined tension and shear load (static and quasi-static load)	
- Resistance to steel failure of the anchor channel	k_{13} ; k_{14} see Annex C6
Characteristic resistance under fatigue tension loading	
- Fatigue resistance to steel failure of the whole system (continuous or tri-linear function, test method A1, A2)	No Performance assessed
- Fatigue limit resistance to steel failure of the whole system (test method B)	No Performance assessed
- Fatigue resistance to concrete related failure (exponential function, test method A1, A2)	No Performance assessed
- Fatigue limit resistance to concrete related failure (test method B)	No Performance assessed
Displacements (static and quasi-static load)	δ_{N0} ; $\delta_{N\infty}$ see Annex C3 $\delta_{V,y,0}$; $\delta_{V,y,\infty}$; $\delta_{V,x,0}$; $\delta_{V,x,\infty}$ see Annex C6

3.2 Safety in case of fire (BWR 2)

Essential characteristic	Performance
Reaction to fire	Class A1
Characteristic resistance to fire	No performance assessed

3.3 Aspects of durability linked with the Basic Works Requirements

Essential characteristic	Performance
Durability	See Annex B1

4 Assessment and verification of constancy of performance (AVCP) system applied, with reference to its legal base

In accordance with EAD No. 330008-03-0601, the applicable European legal act is: [2000/273/EC].

The system to be applied is: 1

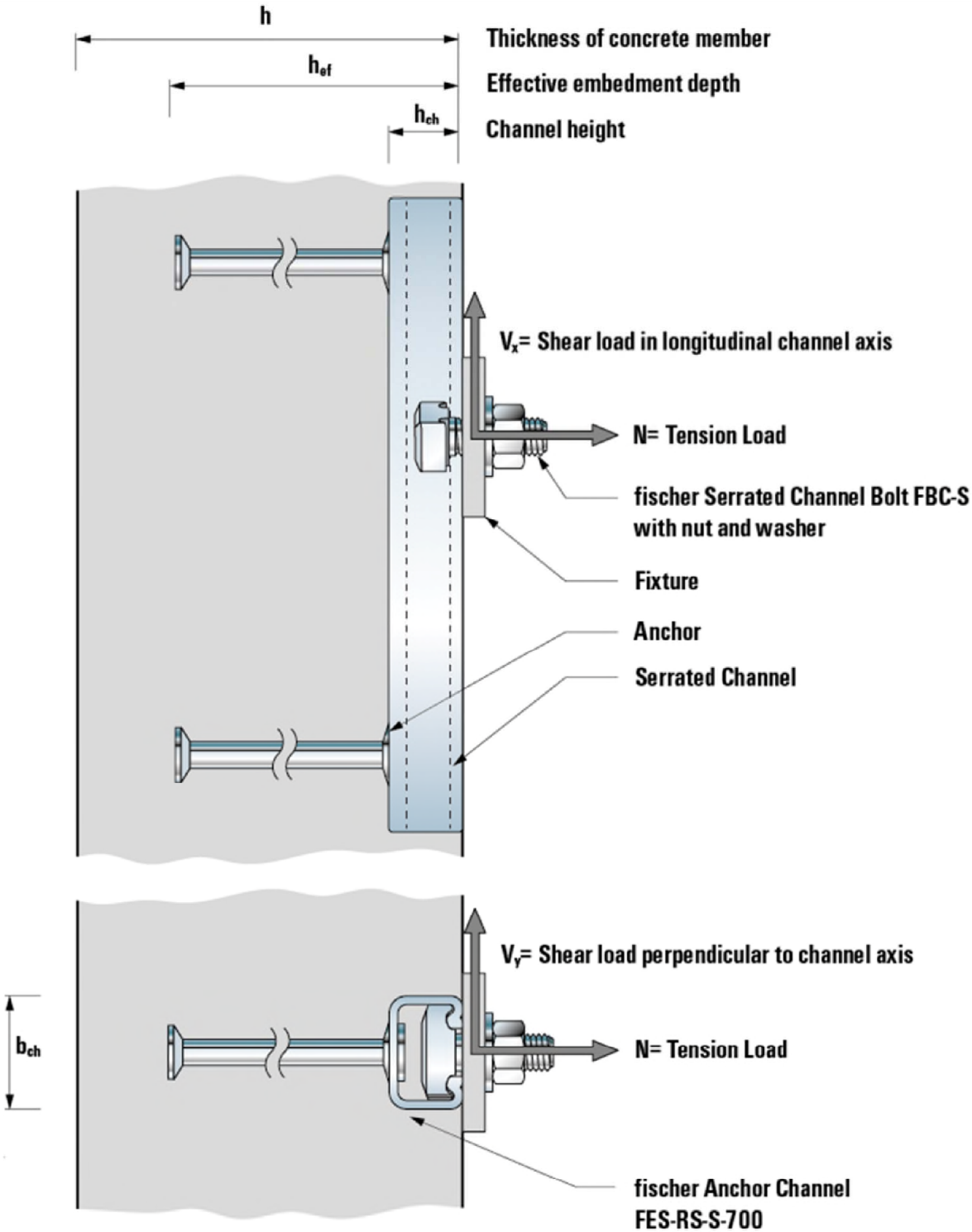

fischer Serrated Anchor Channel InnoLock FES-RS-S with fischer Serrated Channel Bolts FBC-S

Product Description
Installed conditions

Annex A1

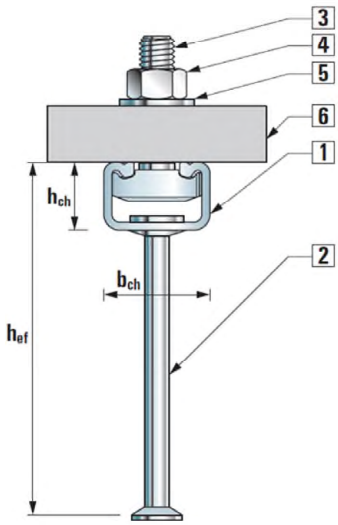

Round anchor

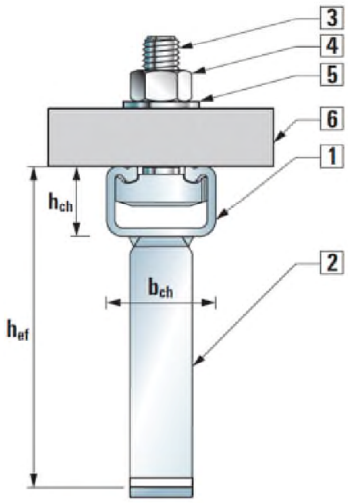

I-anchor

fischer Anchor Channel
FES-RS-S
1 Serrated channel profile
2 Anchor
3 Serrated channel bolt
4 Hexagonal nut
5 Washer
6 Fixture

Marking of the fischer anchor channel FES-RS-S:

e. g.: 700

= Identifying mark of the manufacturer

I = Additional marking for I-anchors
No marking for round anchors

Marking of the fischer channel bolt FBC-S:

e. g.: 8.8 225

= Identifying mark of the manufacturer

8.8 = Strength grade

225 = Width of anchor channel opening d_{ch}

* = Coating electro-plated
No marking for hot dip galvanized

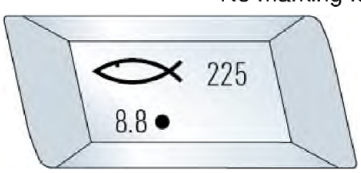

Stamped into back of channel
Optional: printed on channel web or channel lips
RS = Roll-shaped, S = Serrated
No marking for material acc. A7 Table 6 (Channel profile)

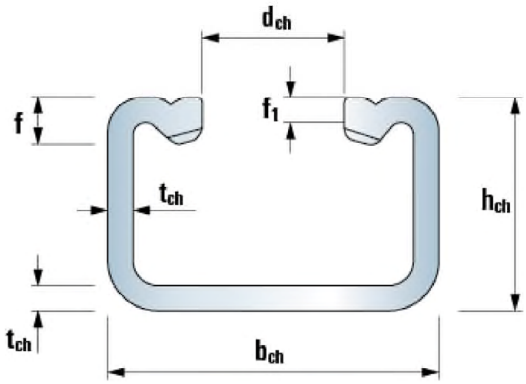

Serrated FES-RS-S-(I)-700

Table 1: Dimensions of channel profile

Anchor Channel FES-RS-S-(I)-	b_{ch} [mm]	h_{ch} [mm]	t_{ch} [mm]	d_{ch} [mm]	f [mm]	f_1 [mm]	I_y [mm^4]
700	52,5	34,0	4,0	22,5	7,0	4,0	79168

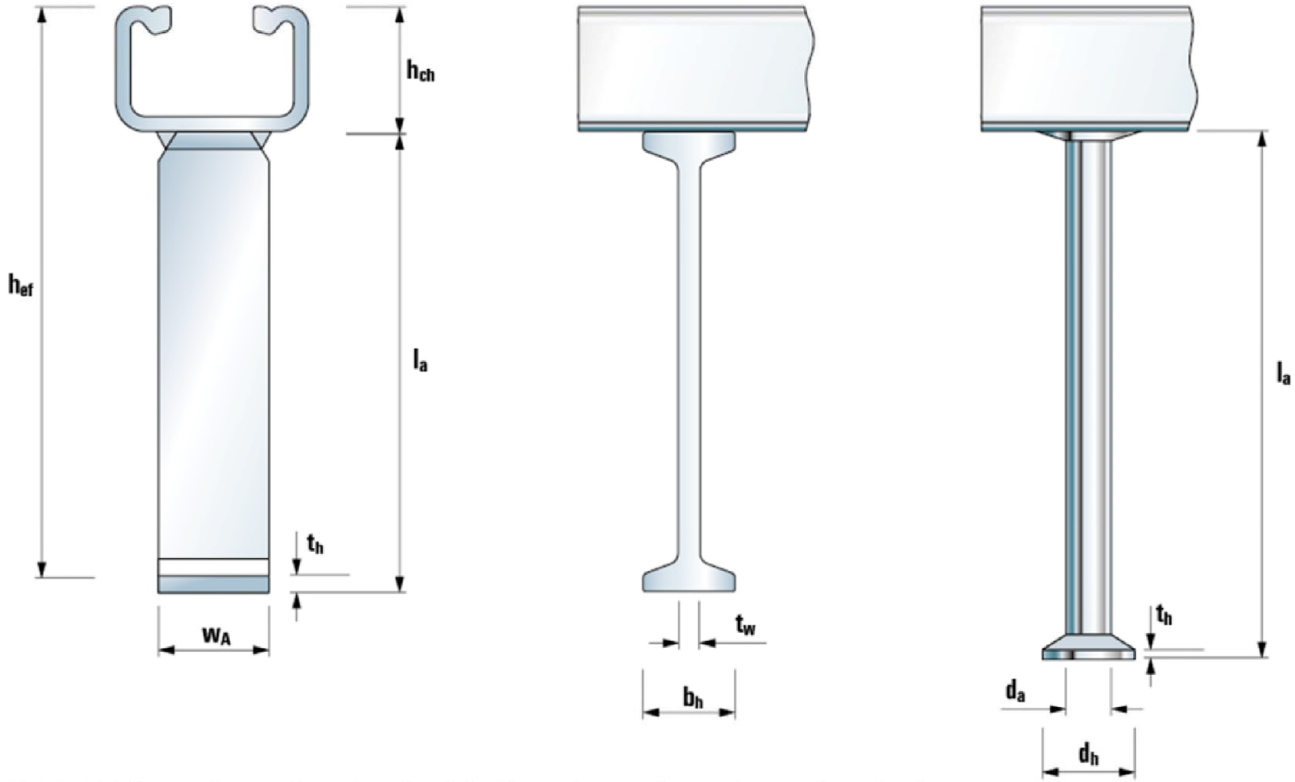

Table 2: Dimensions of anchor (welded I-anchor or forged round anchor)

Anchor Channel FES-RS-S-(I)-	I-anchor						Round anchor				
	$l_{a,min}$ [mm]	$t_{w,min}$ [mm]	$b_{h,min}$ [mm]	t_h [mm]	$w_{A,min}$ [mm]	$A_{h,min}$ [mm²]	$l_{a,min}$ [mm]	d_a [mm]	d_h [mm]	t_h [mm]	A_h [mm²]
700	125	6	25	5	30	570	144	12,8	26,0	3,0	402

Table 3: Anchor position

Anchor channel FES-RS-S-(I-)	Anchor type	s_{min} [mm]	s_{max} [mm]	x_{min} [mm]	x_{max} [mm]	l_{min} [mm]	l_{max} [mm]
700	round or I	100	250	30	35	160	6.070

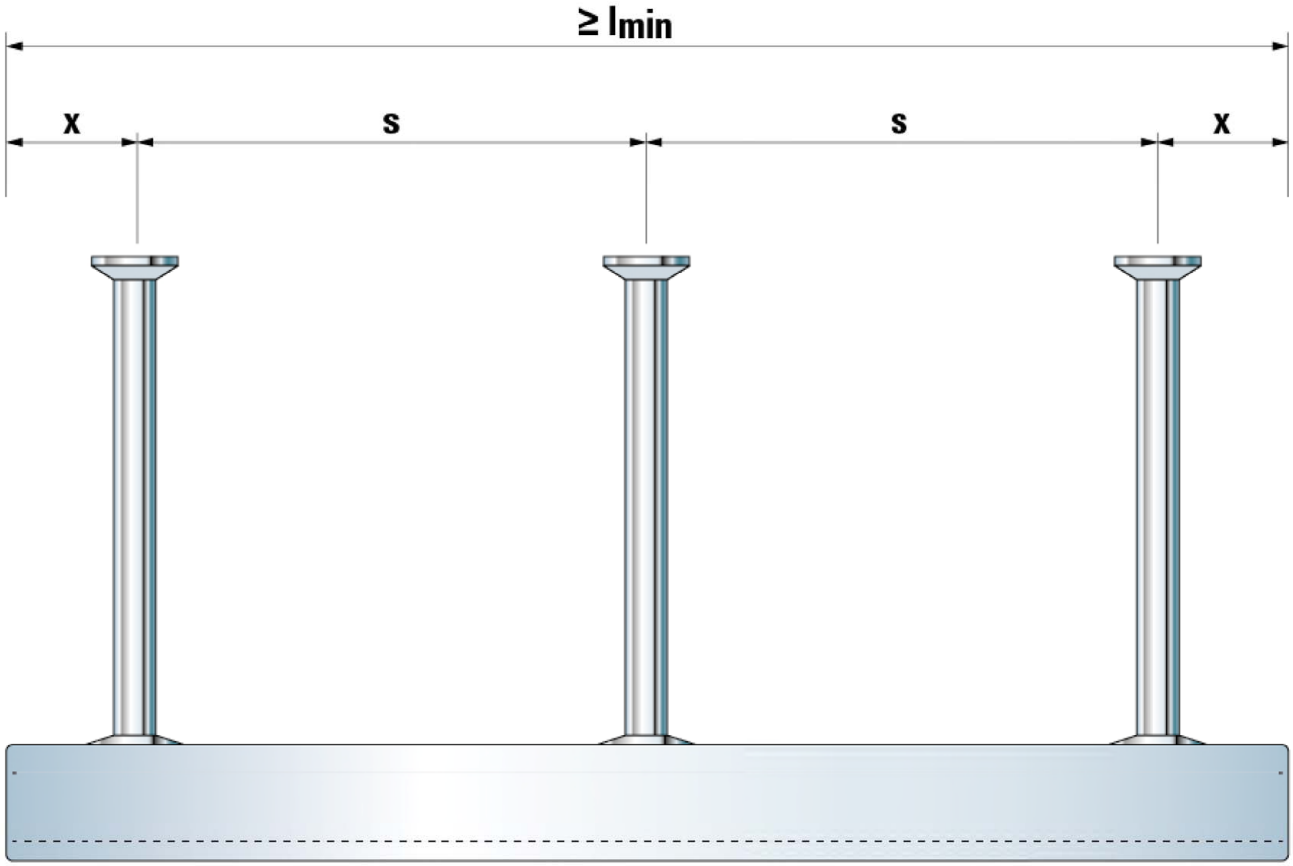

Table 4: Strength grade and corrosion class

Channel Bolt	Carbon steel [1]
Strength grade	8.8
f_{uk} [N/mm²]	800 / 830
f_{yk} [N/mm²]	640 / 660 [2]
Corrosion protection	F [3] or Electroplated

[1] Material properties according to Annex A7
[2] Material properties according to EN ISO 898-1: 2013
[3] Hot-dip galvanized

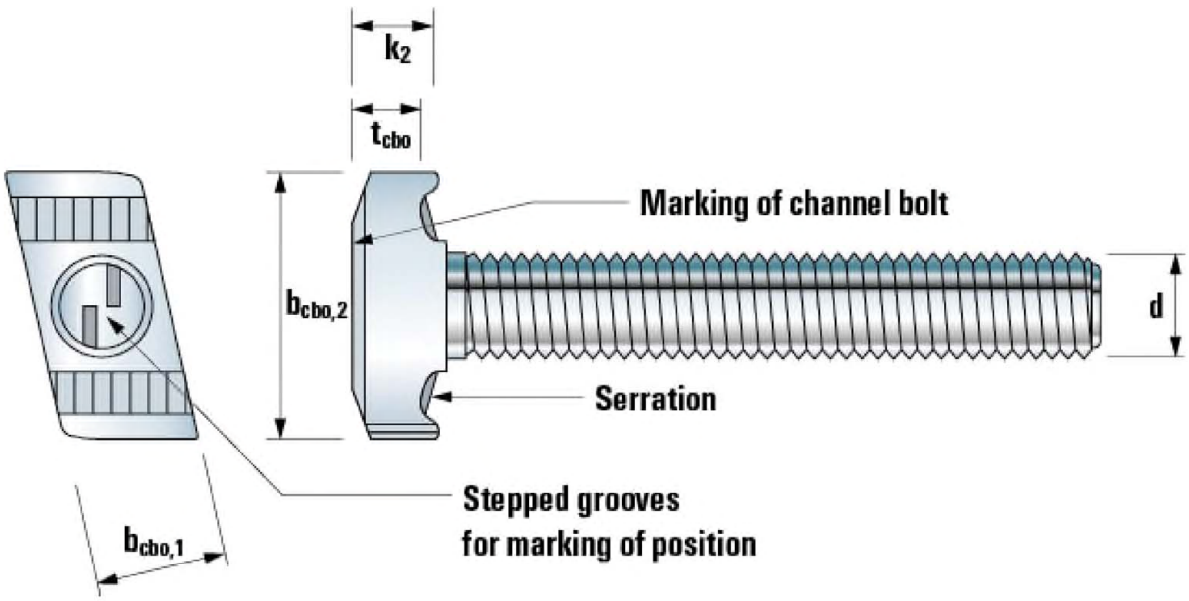

Serrated Channel Bolt FBC-S-225

Table 5: Dimensions of fischer Channel Bolts FBC and matching fischer Anchor Channels FES

Anchor Channel FES-RS-S-(I)-	Channel Bolt FBC-S-	Dimensions				
		d [mm]	$b_{cbo,1}$ [mm]	$b_{cbo,2}$ [mm]	t_{cbo} [mm]	k_2 [mm]
700	225	12 16 20	21,0	43,0	10,7	15,0

Table 6: Materials and properties

Component	Carbon steel		
	Mechanical properties	Coating	Coating
1	2	2a	2b
Channel profile	1.0976 acc. to EN 10149:2004	Hot dip galvanized ≥ 50 µm acc. to EN ISO 10684:2004 + AC:2009	Hot dip galvanized ≥ 50 µm acc. to EN ISO 10684:2004 + AC:2009
Round anchor	1.5525 acc. to EN 10263:2017	Hot dip galvanized ≥ 50 µm acc. to EN ISO 10684:2004 + AC:2009	Hot dip galvanized ≥ 50 µm acc. to EN ISO 10684:2004 + AC:2009
I-anchor	1.0976 acc. to EN 10149:2004	Hot dip galvanized ≥ 50 µm acc. to EN ISO 10684:2004 + AC:2009	Hot dip galvanized ≥ 50 µm acc. to EN ISO 10684:2004 + AC:2009
Channel bolt	Strength grade 8.8 acc. to EN ISO 898-1:2013	Electroplated acc. to EN ISO 4042:2018	Hot dip galvanized ≥ 50 µm acc. to EN ISO 10684:2004 + AC:2009
Plain washer [1] acc. to EN ISO 7089:2000 and EN ISO 7093-1:2000	Hardness class A ≥ 200 HV	Electroplated acc. to EN ISO 4042:2018	Hot dip galvanized ≥ 50 µm acc. to EN ISO 10684:2004 + AC:2009
Hexagonal nut acc. to EN ISO 4032:2012	Property class 8 acc. to EN ISO 898-2:2012	Electroplated acc. to EN ISO 4042:2018	Hot dip galvanized ≥ 50 µm acc. to EN ISO 10684:2004 + AC:2009

[1] Not in the scope of delivery

Specification for intended use

Anchor channels and channel bolts subject to:

- Static and quasi-static tension, shear perpendicular to the longitudinal axis of the channel and shear in the direction of the longitudinal axis of the channel

Base materials:

- Reinforced or unreinforced normal weight concrete according to EN 206-1:2000.
- Strength classes C12/15 to C90/105 according to EN 206-1:2000
- Cracked or uncracked concrete.

Use conditions (Environmental conditions):

- Structures subject to dry internal conditions
  (anchor channels and channel bolts according to Annex A7, Table 6, column 2a and 2b).
- Structures subject to internal conditions with usual humidity (e.g. kitchens, bathrooms and laundries in residential buildings, exceptional permanent damp conditions and application under water)
  (anchor channels and channel bolts according to Annex A7, Table 6, column 2b.

Design:

- Anchor channels are designed under the responsibility of an engineer experienced in anchorages and concrete work.
- Verifiable calculation notes and drawings are prepared taking account of the loads to be anchored. The position of the anchor channel and channel bolts are indicated on the design drawings (e.g. position of the anchor channel relative to the reinforcement or to supports).
- For static and quasi-static loading as well as fire exposure the anchor channels have to be designed in accordance with EOTA TR 047 “Design of Anchor Channels”, March 2018 or EN 1992-4:2018.
- The characteristic resistances are calculated with the minimum effective embedment depth.

Installation:

- The installation of anchor channels is carried out by appropriately qualified personnel under the supervision of the person responsible for the technical matters on site.
- Use of the anchor channels only as supplied by the manufacturer - without any manipulations, repositioning or exchanging of channel components.
- Cutting of anchor channels is allowed only if pieces according to Annex A5, Table 3 are generated including end spacing x and minimum channel length l_{min} and only to be used in dry internal conditions.
- Installation in accordance with the installation instruction given in Annexes B5 and B6.
- The anchor channels are fixed on the formwork, reinforcement or auxiliary construction such that no movement of the channels will occur during the time of laying the reinforcement and of placing and compacting the concrete.
- The concrete around the head of the anchors is properly compacted. The channels are protected from penetration of concrete into the internal space of the channels.
- Washers may be chosen according to Annex A7 and provided separately by the user.
- Orientating the channel bolt (groove according to Annex B6, B7 and B8) rectangular to the channel axis.
- The required installation torque given in Annex B4 must be applied and must not be exceeded.

Table 7: Installation parameters

Anchor Channel FES-RS-S-			700	l-700
Minimum effective embedment depth	$h_{ef,min}$	[mm]	175	154
Minimum edge distance	c_{min}		75	75
Minimum thickness of concrete member	h_{min}		178	178

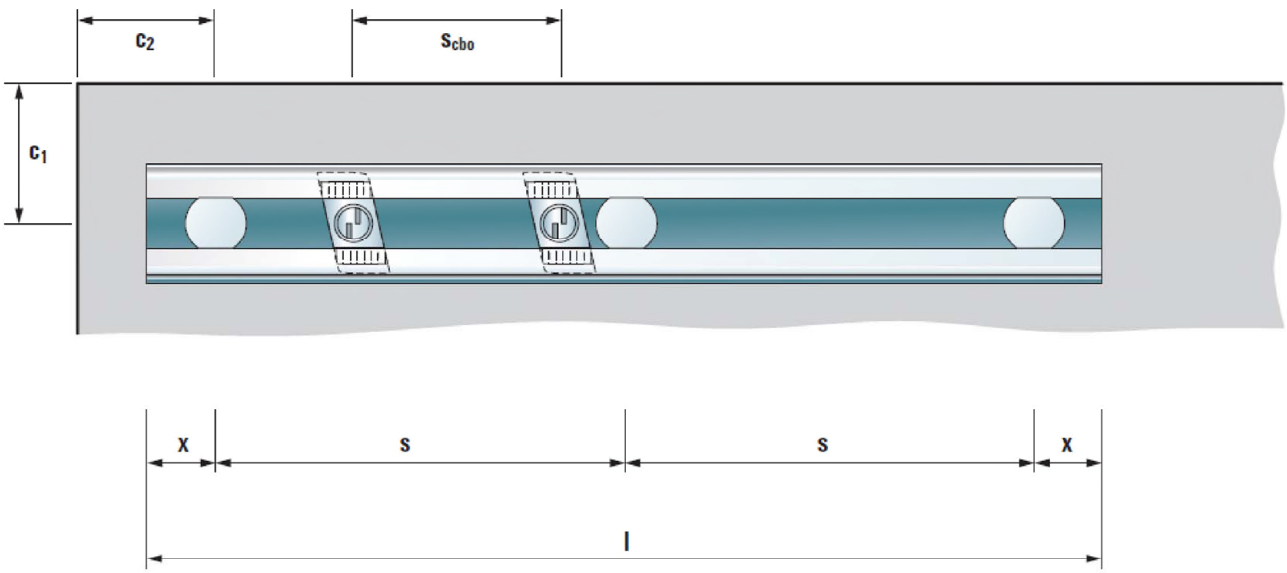

Table 8: Minimum spacing for channel bolts

Channel bolt			M12	M16	M20
Minimum spacing between channel bolts	$s_{cbo,min}$	[mm]	60	80	100

Table 9: Installation torque T_{inst}

fischer Anchor channel FES-RS-S-(I)-	fischer Channel Bolt FBC-S-	Thread diameter	T_{inst} [1] [Nm]	
			General $T_{inst,g}$	Steel - steel contact $T_{inst,s}$
			8.8	8.8
700	225	M12	80	100
		M16	100	200
		M20	120	360

[1] T_{inst} must not be exceeded

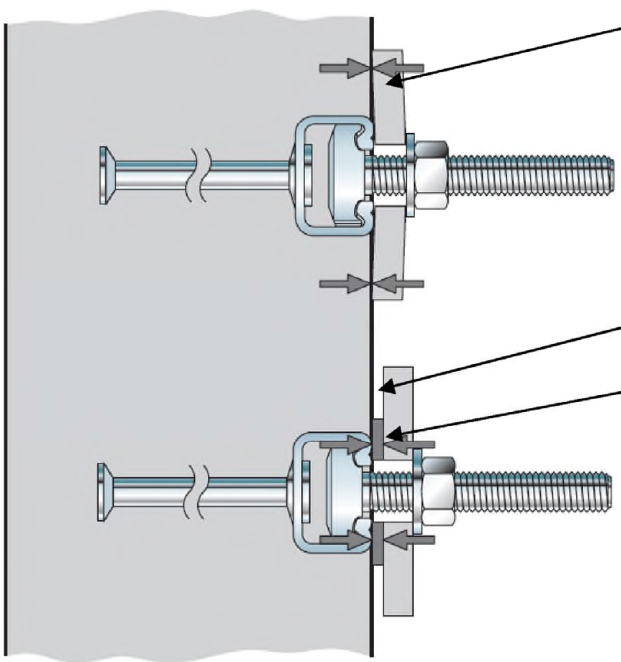

General:
The fixture is in contact with the channel profile and the concrete surface by tightening with $T_{inst,g}$.

Gap

Steel-to-steel contact:
The fixture is not in contact with the concrete surface. The fixture is fastened to the anchor channel by a suitable steel part (e.g. washer) by tightening with $T_{inst,s}$.
($T_{inst,s} \geq T_{inst,g}$)

Anchor Channel FES-RS-S

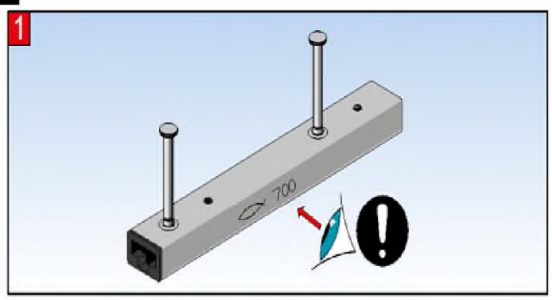

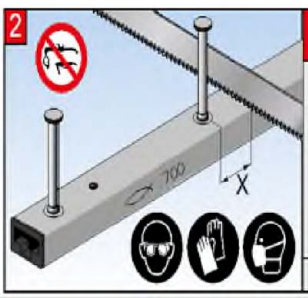

X	
30-35mm	FES-RS-S 700

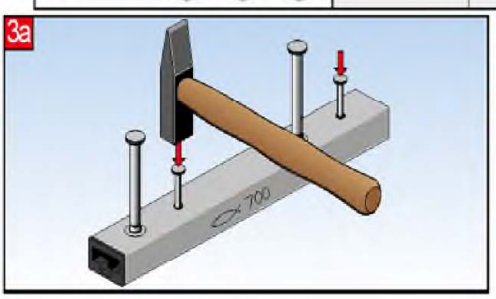

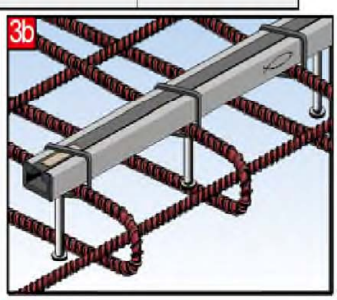

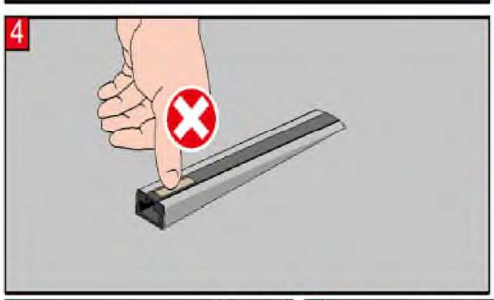

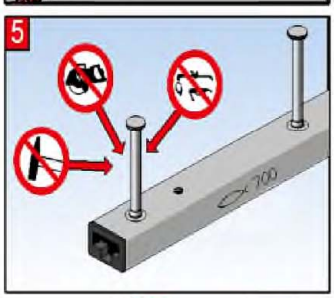

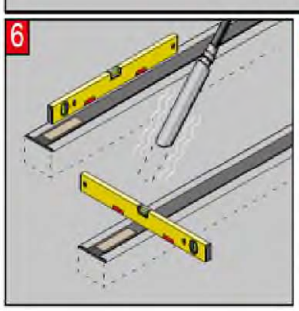

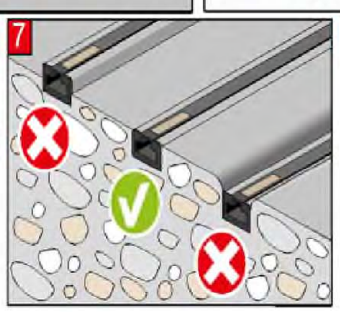

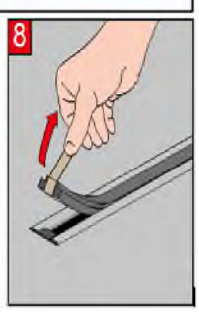

Serrated Channel Bolts FBC-S

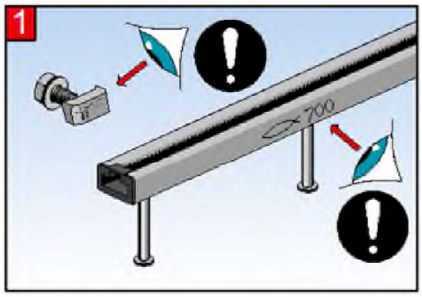

FBC-S-	FES-RS-S
225	700

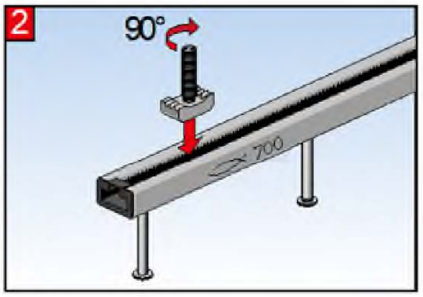

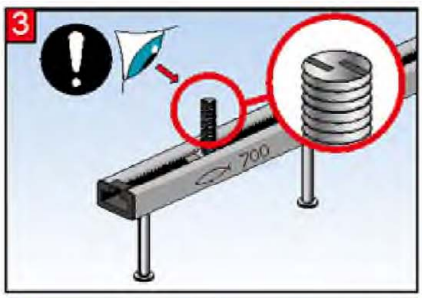

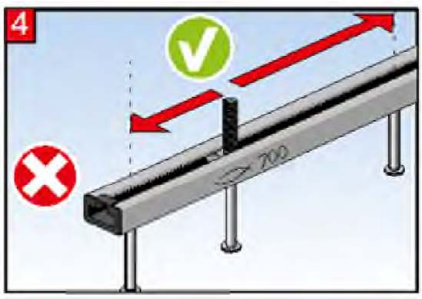

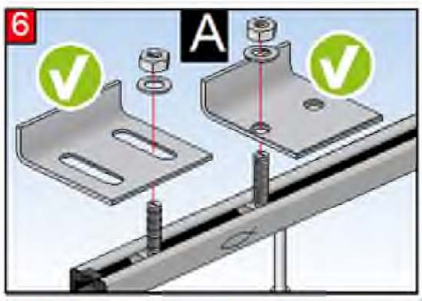

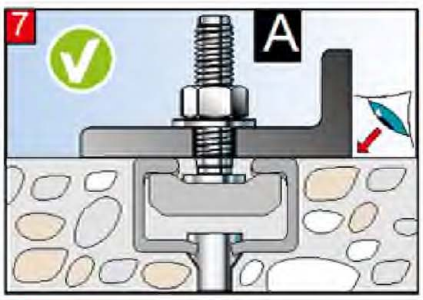

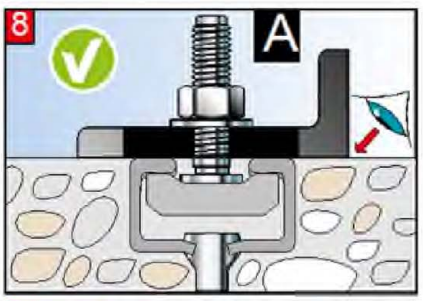

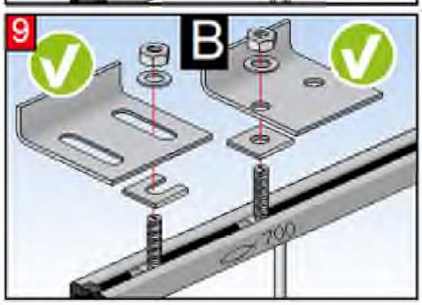

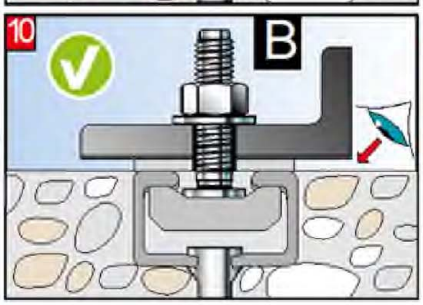

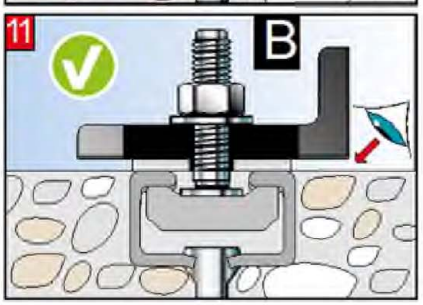

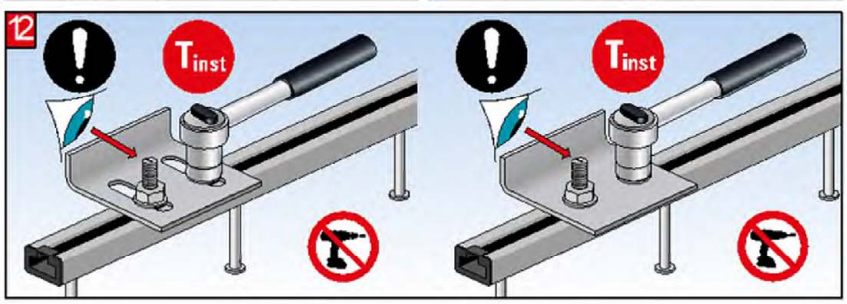

FBC-S-	FES-RS-S-	T_{inst} [Nm]	M12	M16	M20
225	700	A	80	100	120
		B	100	200	360

T_{inst} must not be exceeded.

fischer Serrated Anchor Channel InnoLock FES-RS-S with fischer Serrated Channel Bolts FBC-S

Intended Use
Installation instruction for Serrated fischer Channel Bolts FBC-S

Annex B6

Table 10: Characteristic resistances under tension load – steel failure of anchor channels

Anchor Channel FES-RS-S-			700	I-700
Steel failure: Anchor				
Characteristic resistance	$N_{Rk,s,a}$	[kN]	73,3	81,0
Partial factor	γ_{Ms} 1)	[-]	1,8	
Steel failure: Connection between anchor and channel				
Characteristic resistance	$N_{Rk,s,c}$	[kN]	73,0	80,0
Partial factor	γ_{Ms} 1)	[-]	1,8	
Steel failure: Local flexure of channel lips				
Characteristic spacing of channel bolts for $N_{Rk,s,l}$	$s_{l,N}$	[mm]	105	
Characteristic resistance	$N^0_{Rk,s,l}$	[kN]	80	
Partial factor	γ_{Ms} 1)	[-]	1,8	

1) In absence of other national regulations

Table 11: Characteristic flexural resistance of channel

Anchor Channel FES-RS-S-(I)-			700
Steel failure: Flexure of channel			
Characteristic flexural resistance of channel	$M_{Rk,s,flex}$	[Nm]	3749
Partial factor	$\gamma_{Ms,flex}$ 1)	[-]	1,15

1) In absence of other national regulations

Table 12: Characteristic resistances under tension load – concrete failure

Anchor Channel FES-RS-S-			700	I-700
Concrete failure: Pull-out failure				
Characteristic resistance in cracked concrete C12/15	$N_{Rk,p}$	[kN]	36,2	51,3
Characteristic resistance in uncracked concrete C12/15	$N_{Rk,p}$	[kN]	50,7	71,8
Increasing factor of $N_{Rk,p} = N_{Rk,p}$ (C12/15)*ψ_c	C16/20 C20/25 C25/30 C30/37 C35/45 C40/50 C45/55 C50/60 C55/67 ≥C60/75	ψ_c [-]	1,33 1,67 2,08 2,50 2,92 3,33 3,75 4,17 4,58 5,00	
Partial factor	$\gamma_{Mp}=\gamma_{Mc}$ [1)]	[-]	1,5	
Concrete failure: Concrete cone failure				
Product factor k_1	$k_{cr,N}$ $k_{ucr,N}$	[-] [-]	8,9 12,6	8,7 12,5
Partial factor	γ_{Mc} [1)]	[-]	1,5	
Concrete failure: Concrete splitting failure				
Characteristic edge distance	$c_{cr,sp}$	[mm]	525	477
Characteristic spacing	$s_{cr,sp}$	[mm]	1050	954
Partial factor	$\gamma_{Msp}=\gamma_{Mc}$ [1)]	[-]	1,5	

[1)] In absence of other national regulations

Table 13: Displacements under tension load

Anchor Channel FES-RS-S-(I)-			**700**
Tension load	N	[kN]	31,7
Short-term displacement [1)]	δ_{N0}	[mm]	2,1
Long-term displacement [1)]	$\delta_{N\infty}$	[mm]	4,2

[1)] Displacements in midspan of the anchor channel, including slip of channel bolt, deformation of channel lips, bending of the channel and slip of the anchor channel in concrete

Table 14: Characteristic resistances under shear load – steel failure of anchor channels

Anchor Channel FES-RS-S-			700	I-700
Steel failure: Anchor				
Characteristic resistance	$V_{Rk,s,a,y}$	[kN]	120,0	120,0
	$V_{Rk,s,a,x}$	[kN]	44,0	48,6
Partial factor	γ_{Ms} 1)	[-]	1,8	
Steel failure of connection between anchor and channel				
Characteristic resistance	$V_{Rk,s,c,y}$	[kN]	120,0	120,0
	$V_{Rk,s,c,x}$	[kN]	43,8	48,0
Partial factor	γ_{Ms} 1)	[-]	1,8	
Steel failure: Local flexure of channel lips				
Characteristic spacing of channel bolts for $V_{Rk,s,l}$	$s_{l,V}$	[mm]	105	
Characteristic resistance	$V^0_{Rk,s,l,y}$	[kN]	92,0	
Partial factor	γ_{Ms} 1)	[-]	1,8	

1) In absence of other national regulations

Table 15: Characteristic resistance for shear load in direction of the longitudinal axis of the channel – steel failure

Anchor Channel FES-RS-S-(I)-				700
Steel failure: Connection between channel lips and serrated channel bolt				
Characteristic resistance	$V_{Rk,s,l,x}$	[kN]	FBC-S-225-M12-8.8	-[2]
			FBC-S-225-M16-8.8	22,5
			FBC-S-225-M20-8.8	22,5
Installation factor	γ_{inst} [1]	[-]		1,2

[1] In absence of other national regulations
[2] No performance assessed.

Table 16: Characteristic resistances of the anchor channel under shear load – concrete failure

Anchor Channel FES-RS-S-(I)-				700
Concrete failure: Pry-out failure				
Product factor		k_8	[-]	2,0
Partial factor		γ_{Mc} [1]	[-]	1,5
Concrete failure: Concrete edge failure				
Product factor k_{12}	Cracked concrete	$k_{cr,V}$	[-]	7,5
	Uncracked concrete	$k_{ucr,V}$	[-]	10,5
Partial factor		γ_{Mc} [1]	[-]	1,5

[1] In absence of other national regulations

Table 17: Displacements under shear load

Anchor Channel FES-RS-S-(I)-			700
Shear load perpendicular to the longitudinal axis of the channel	V_y	[kN]	36,5
Short-term displacement [1)]	$\delta_{V,y,0}$	[mm]	2,9
Long-term displacement [1)]	$\delta_{V,y,\infty}$	[mm]	4,4
Shear load in direction of the longitudinal axis of the channel	V_x	[kN]	6,6
Short-term displacement [2)]	$\delta_{V,x,0}$	[mm]	1,2
Long-term displacement [2)]	$\delta_{V,x,\infty}$	[mm]	1,8

[1)] Displacements in midspan of the anchor channel, including slip of channel bolt, deformation of channel lips and slip of the anchor channel in concrete

[2)] Displacements of the anchor channel, including slip of channel bolt, deformation of channel lips and slip of the anchor channel in concrete.

Table 18: Characteristic resistances under tension and shear load – steel failure of channel bolts

Channel bolt FBC-S-225			M12	M16	M20
Steel failure:			Steel grade 8.8		
Characteristic resistance	$N_{Rk,s}$	[kN]	67,4	125,6	170,0
Partial factor	γ_{Ms} [1)]	[-]	1,5		
Characteristic resistance	$V_{Rk,s}$	[kN]	33,7	62,8	98,0
Partial factor	γ_{Ms} [1)]	[-]	1,25		

[1)] In absence of other national regulations

Table 19: Characteristic resistances under combined tension and shear load

Anchor Channel FES-RS-S-(I)-			700
Steel failure: Local flexure of channel lips and flexure of channel			
Product factor	k_{13}	[-]	according to EN 1992-4:2018, 7.4.3.1
Steel failure: Anchor and connection between anchor and channel			
Product factor	k_{14}	[-]	according to EN 1992-4:2018, 7.4.3.1

Table 20: Characteristic resistances under shear load with lever arm – steel failure of channel bolts

Channel bolt thread diameter[2)]				M12	M16	M20
Steel failure						
Characteristic flexural resistance	$M^0_{Rk,s}$	[Nm]	FBC-S-225	104,8	266,4	519,3
Partial factor	γ_{Ms} [1)]	[-]	FBC-S-225	1,25		
Internal lever arm	a	[mm]	FBC-S-225	29,8	31,8	34,2

[1)] In absence of other national regulations

[2)] Materials according to Annex A7, Table 6

The characteristic flexure resistance according to Table 19 is limited as follows:

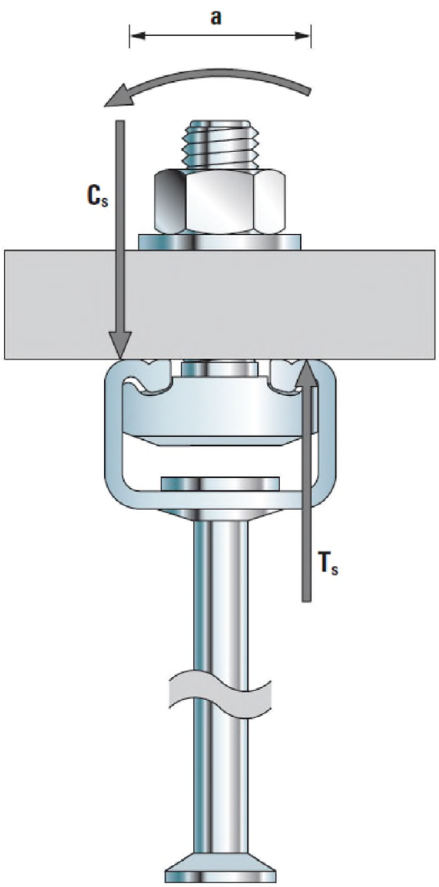

$M^0_{Rk,s} \leq 0{,}5 \cdot N^0_{Rk,s,l} \cdot a$ ($N^0_{Rk,s,l}$ according to Annex C1, Table 10)

$M^0_{Rk,s} \leq 0{,}5 \cdot N_{Rk,s} \cdot a$ ($N_{Rk,s}$ according to Annex C5, Table 18)

a = Internal lever arm according to Table 19

T_s = Tension force acting on the channel lips

C_s = Compression force acting on the channel lips