ДЕКЛАРАЦИЯ ЗА ЕКСПЛОАТАЦИОННИ ПОКАЗАТЕЛИ

DoP 0314

за fischer за fischer анкер FAZ II FAZ II Plus dynamic (Предварително монтирано укрепване в напукан или ненапукан бетон) BG

1. Уникален идентификационен код на типа продукт: **DoP 0314**

2. Предвидена употреба/употреби: **Крепежни елементи за проходен монтаж, за използване в бетон при циклично натоварване от умора, виж Приложението, по-специално Приложения B1- B4.**

3. Производител: **fischerwerke GmbH & Co. KG, Klaus-Fischer-Str. 1, 72178 Waldachtal, Германия**

4. Упълномощен представител: **–**

5. Система/системи за оценяване и проверка на постоянството на експлоатационните показатели: **1**

6. Европейски документ за оценяване: **EAD 330250-00-0601, Edition 06/2021**
   Европейска техническа оценка: **ETA-20/0897; 2022-12-20**
   Орган за техническа оценка: **DIBt- Deutsches Institut für Bautechnik**
   Нотифициран орган/органи: **2873 TU Darmstadt**

7. Декларирани експлоатационни показатели:
   EAD 330250-00-0601; Table 2.1
   Механична устойчивост и здравина (BWR 1)
   Характерна носимоспособност на опън (за статично и квази статично действие) метод А:
   Устойчивост на разрушаване на стомана: Приложения C1
   Товароустойчивост при при отказ на изтегляне: Приложения C1
   Товароустойчивост при при отказ от излизане на бетонния конус: Приложения C1
   Здравина: Приложения C1
   Минимални отстояния от ръба и междуосови отстояния: Приложения C5, C6
   Разстояние до ръба, за да се предотврати сцепването при натоварване: Приложения C1
   Характерна носимоспособност на сряз (за статично и квази статично действие), метод А:
   Товароустойчивост при натоварване на сряз, отказ на стоманата: Приложения C2
   Устойчивост на отказ при отклонение: Приложения C2
   измествания:
   Измествания при статично и квазистатично натоварване: Приложения C9
   Характерно съпротивление и Измествания за сеизмични класове C1 и C2:
   Товароустойчивост при натоварване на опън, категория C1: Приложение C7
   Товароустойчивост при натоварване на опън, Измествания, категория C2: Приложения C8, C9
   Товароустойчивост при натоварване на сряз, категория C1: Приложение C7
   Товароустойчивост при натоварване на сряз, Измествания, категория C2: Приложения C8, C9
   Фактор пръстеновидна фуга: Приложения C7, C8
   Пожарна безопасност (BWR 2)
   Реакция на огън: Клас (A1)
   Пожароустойчивост:
   Пожароустойчивост при съпротивление на опън, отказ на стоманата: Приложение C3
   Пожароустойчивост при съпротивление на опън, отказ на изтегляне: Приложение C3
   Пожароустойчивост при съпротивление на сряз, отказ на стоманата: Приложения C3, C4
   трайност:
   трайност: Приложения A3, B1

   EAD 330250-00-0601; Table 2.5
   Метод за оценка C: Линеаризирана функция
   Механична устойчивост и здравина (BWR 1)
   Характерна устойчивост на умора на стоманата при натоварване на опън: Приложения C10, C11

   Характерен бетонен конус, устойчивост на издърпване, разцепване и издухване при натоварване на опън: Приложения C10, C11

   Характерна устойчивост на издърпване или комбинирано издърпване/бетонен конус при натоварване на опън: Приложения C10, C11
   Характерна устойчивост на умора, на стоманата при натоварване на срязване: Приложения C10, C11

   Характерна устойчивост на умора на ръба на бетона при натоварване на срязване: Приложения C10, C11

   Характерна устойчивост на издърпване от бетон при натоварване на срязване: Приложения C10, C11

   Характерна устойчивост на умора на стомана при опън и срязване: Приложения C10, C11

   Коефициент на пренос на натоварване, за натоварване на опън и срязване: Приложения C10, C11

8. Подходяща техническа документация и/или специфична техническа документация: -

Експлоатационните показатели на продукта, посочени по-горе, са в съответствие с декларираните експлоатационни показатели. Настоящата декларация за експлоатационни показатели се издава в съответствие с Регламент (ЕС) № 305/2011, като отговорността за нея се носи изцяло от посочения по-горе производител.
Подписано за и от името на производителя от:

Dr. Oliver Geibig, Управляващ директор Бизнес звена и инженеринг

Jürgen Grün, Управляващ директор Химически крепежи и Качество

Tumlingen, 2023-02-01

Тази Декларация за съответствие е изготвена на различни езици. В случай, че възникне спор, относно интерпретирането, трябва да се вземе предвид английската версия.

Приложението съдържа доброволна и допълнителна информация на английски език в обем и съдържание, надхвърлящи (независимо от езика) законовите изисквания.

Specific Part

1 Technical description of the product

The fischer Bolt Anchor FAZ II Plus dynamic is an anchor made of galvanised steel (FAZ II Plus dynamic) or stainless steel (FAZ II Plus dynamic R) which is placed into a drilled hole and anchored by torque-controlled expansion.

The fastener consists of an fischer Bolt Anchor FAZ II Plus with cone bolt, expansion clip, washer and hexagon nut and a Dynamic set with filling conical washer, spherical washer and lock nut.

The product description is given in Annex A.

2 Specification of the intended use in accordance with the applicable European Assessment Document

The performances given in Section 3 are only valid if the fastener is used in compliance with the specifications and conditions given in Annex B.

The verifications and assessment methods on which this European Technical Assessment is based lead to the assumption of a working life of the fastener of at least 50 years. The indications given on the working life cannot be interpreted as a guarantee given by the producer, but are to be regarded only as a means for choosing the right products in relation to the expected economically reasonable working life of the works.

3 Performance of the product and references to the methods used for its assessment

3.1 Mechanical resistance and stability (BWR 1)

Essential characteristic (static, quasi-statisc loading and seismic)	**Performance**
Characteristic resistance to tension load (static and quasi-static loading)	See Annexes C 1, C 5, C 6
Characteristic resistance to shear load (static and quasi-static loading)	See Annex C 2
Displacements (static and quasi-static loading)	See Annex C 9
Characteristic resistance and displacements for seismic performance categories C1 and C2	See Annexes C 7 to C 9

Essential characteristic (fatigue loading, Linearized function - Assessment method C)	**Performance**
Characteristic fatigue resistance under cyclic tension loading	
Characteristic steel fatigue resistance $\Delta N_{Rk,s,0,n}$ (n = 1 to n = ∞)	See Annexes C 10 and C 11
Characteristic concrete cone, pull-out, splitting and blow out fatigue resistance $\Delta N_{Rk,c,0,n}$ $\Delta N_{Rk,sp,0,n}$ $\Delta N_{Rk,cb,0,n}$ (n = 1 to n = ∞)	
Characteristic pull- out fatigue resistance $\Delta N_{Rk,p,0,n}$ (n = 1 to n = ∞)	

Essential characteristic (fatigue loading, Linearized function - Assessment method C)	**Performance**
Characteristic fatigue resistance under cyclic shear loading	
Characteristic steel fatigue resistance $\Delta V_{Rk,s,0,n}$ (n = 1 to n = ∞)	See Annexes C 10 and C 11
Characteristic concrete edge fatigue resistance $V_{Rk,c,0,n}$ (n = 1 to n = ∞)	
Characteristic concrete pry out fatigue resistance $\Delta V_{Rk,cp,0,n}$ (n = 1 to n = ∞)	
Characteristic fatigue resistance under cyclic combined tension and shear loading	
Characteristic steel fatigue resistance a_s (n = 1 to n = ∞)	See Annexes C 10 and C 11
Load transfer factor for cyclic tension and shear loading	
Load transfer factor ψ_{FN}, ψ_{FV}	See Annexes C 10 and C 11

3.2 Safety in case of fire (BWR 2)

Essential characteristic	**Performance**
Reaction to fire	Class A1
Resistance to fire	See Annex C 3 and C 4

3.3 Aspects of durability

Essential characteristic	**Performance**
Durability	See Annex B 1

4 Assessment and verification of constancy of performance (AVCP) system applied, with reference to its legal base

In accordance with European Assessment Document No. 330250-00-0601, the applicable European legal act is: [96/582/EC].

The system to be applied is: 1

Cone bolt manufactured by cold - forming:

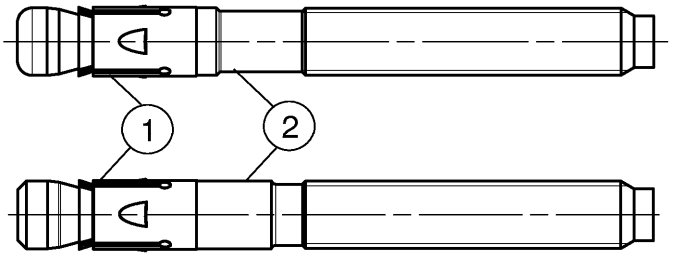

Cone bolt manufactured by turning:

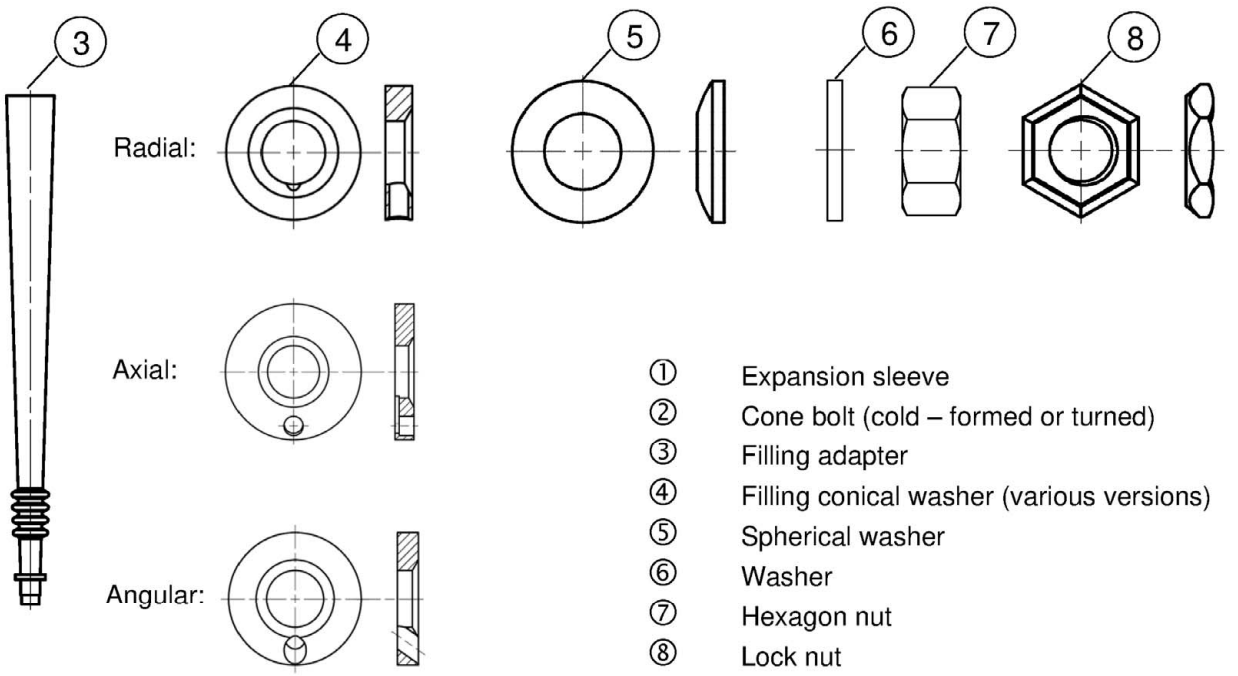

① Expansion sleeve
② Cone bolt (cold – formed or turned)
③ Filling adapter
④ Filling conical washer (various versions)
⑤ Spherical washer
⑥ Washer
⑦ Hexagon nut
⑧ Lock nut

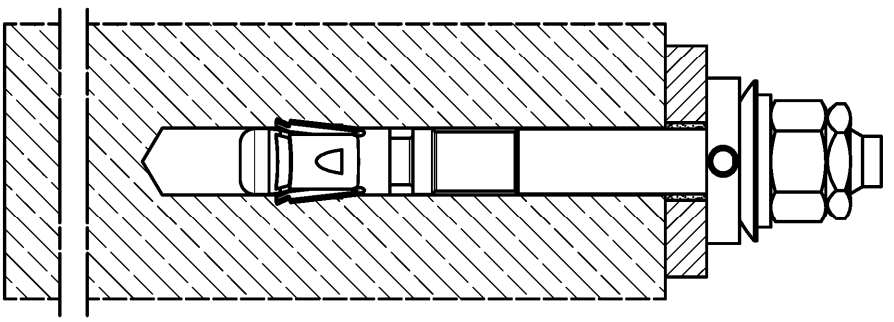

(Fig. not to scale)

fischer Bolt Anchor FAZ II Plus dynamic

Product description
Installed condition

Annex A 1

Product marking and letter-code:

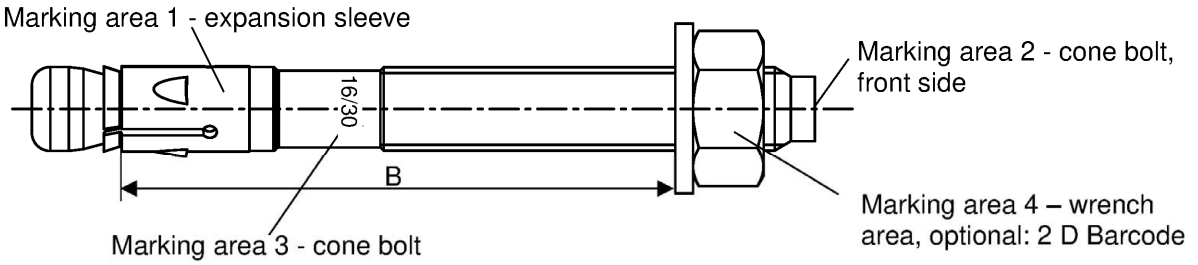

Product marking, example: FAZ II + 16/30 R

Brand | type of fastener placed at marking area 1 or 3

Thread size / max. thickness of the fixture (t_{fix}) identification R placed at marking area 1 or 3

FAZ II Plus dynamic: carbon steel, galvanised
FAZ II Plus dynamic R: stainless steel

Table A2.1: Letter - code at marking area 2:

Marking		(a)	(b)	(c)	(d)	(A)	(B)	(C)	(D)	(E)	(F)	(G)	(H)	(I)	(K)
Max. $t_{fix,ges}$ [mm]		5	10	15	20	5	10	15	20	25	30	35	40	45	50
B ≥ [mm]	M16	70	75	80	85	90	95	100	105	110	115	120	125	130	135
	M20	-				105	110	115	120	125	130	135	140	145	150
	M24					130	135	140	145	150	155	160	165	170	175

Marking		(L)	(M)	(N)	(O)	(P)	(R)	(S)	(T)	(U)	(V)	(W)	(X)	(Y)	(Z)
Max. $t_{fix,ges}$ [mm]		60	70	80	90	100	120	140	160	180	200	250	300	350	400
B ≥ [mm]	M16	145	155	165	175	185	205	225	245	265	285	335	385	435	485
	M20	160	170	180	190	200	220	240	260	280	300	350	400	450	500
	M24	185	195	205	215	225	245	265	285	305	325	375	425	475	525

Calculation existing h_{ef} for installed fasteners:

existing h_{ef} = $B_{(according\ to\ table\ A2.1)}$ – existing $t_{fix,ges}$

$t_{fix,ges}$ see Annex B2

(Fig. not to scale)

Table A3.1: Materials FAZ II Plus dynamic

Part	Designation	Material	
		FAZ II Plus dynamic	FAZ II Plus dynamic R
	Steel grade	Steel	Stainless steel R
		Zinc plated ≥ 5 µm, ISO 4042:2018	Acc. to EN 10088:2014 Corrosion resistance class CRC III acc. to EN 1993-1-4:2006+A1:2015
1	Expansion sleeve	Cold strip, EN 10139:2016 or stainless steel EN 10088:2014	Stainless steel EN 10088:2014
2	Cone bolt	Cold form steel or free cutting steel	
3	Filling adapter	Plastic	
4	Filling conical washer	Cold form steel or free cutting steel	Stainless steel EN 10088:2014
5	Spherical washer		
6	Washer	Cold strip, EN 10139:2016	
7	Hexagon nut	Steel, property class min. 8, EN ISO 898-2:2012	Stainless steel EN 10088:2014; ISO 3506-2:2018; property class – min. 70
8	Lock nut	Cold strip, EN 10139:2016	Stainless steel EN 10088:2014
	Injection cartridge	Mortar, hardener, filler (compressive strength ≥ 50 N/mm²)	

Specifications of intended use

Fastenings subject to:

Size	FAZ II Plus dynamic, FAZ II Plus dynamic R		
	M16	M20	M24
Hammer drilling with standard drill bit	✓		
Hammer drilling with hollow drill bit with automatic cleaning			
Static and quasi-static loading in cracked and uncracked concrete	✓		
Seismic actions category C1 and C2 – not in combination with fatigue loading	✓		
Fire exposure – not in combination with fatigue loading	✓		
Fatigue load in cracked and uncracked concrete – not in combination with seismic- or fire exosure	✓		

Base materials:

- Compacted reinforced and unreinforced normal weight concrete without fibres (cracked and uncracked) according to EN 206:2013+A2:2021
- Strength classes C20/25 to C50/60 according to EN 206:2013+A2:2021

Use conditions (Environmental conditions):

- Structures subject to dry internal conditions (FAZ II Plus dynamic, FAZ II Plus dynamic R)
- For all other conditions according to EN 1993-1-4:2006 + A1:2015 corresponding to corrosion resistance class CRC III: for FAZ II Plus dynamic R

Design:

- Fastenings are to be designed under the responsibility of an engineer experienced in fastenings and concrete work
- Verifiable calculation notes and drawings are to be prepared taking account of the loads to be anchored. The position of the fastener is indicated on the design drawings (e.g. position of the fastener relative to reinforcement or to supports, etc.)
- Design of fastenings according to EN 1992-4:2018 and EOTA Technical Report TR 061: 2020-08 "Design method for fasteners in concrete under fatigue cyclic loading"
- Fastenings in stand-off installation according to EN 1992-4:2018, 6.2.2.3 are not covered by this European Technical Assessment
- Fatigue design cannot be done in combination with seismic- or fire exposure

Table B2.1: Installation parameters

Size			FAZ II Plus dynamic, FAZ II Plus dynamic R		
			M16	**M20**	**M24**
Nominal drill hole diameter	d_0 =	[mm]	16	20	24
Maximum bit diameter with hammer or hollow drilling	$d_{cut,max}$	[mm]	16,50	20,55	24,55
Effective embedment depth	$h_{ef} \geq$	[mm]	65 - 160	100 - 180	125
Length from h_{ef} to end of cone bolt	L	[mm]	17,5	20,0	23,5
Overall fastener embedment depth in the concrete	$h_{nom} \geq$	[mm]	h_{ef} + L		
Depth of drill hole to deepest point	$h_1 \geq$	[mm]	h_{nom} + 5	h_{nom} + 10	
Diameter of clearance hole in the fixture	$d_f \leq$	[mm]	18	22	26
Required setting torque	T_{inst} =	[Nm]	110	200	270
Minimum thickness of the fixture	$t_{fix,min} \geq$	[mm]	15	20	24
Thickness of the fixture	$t_{fix,ges}$ =	[mm]	t_{fix} + 11	t_{fix} + 13	t_{fix} + 17

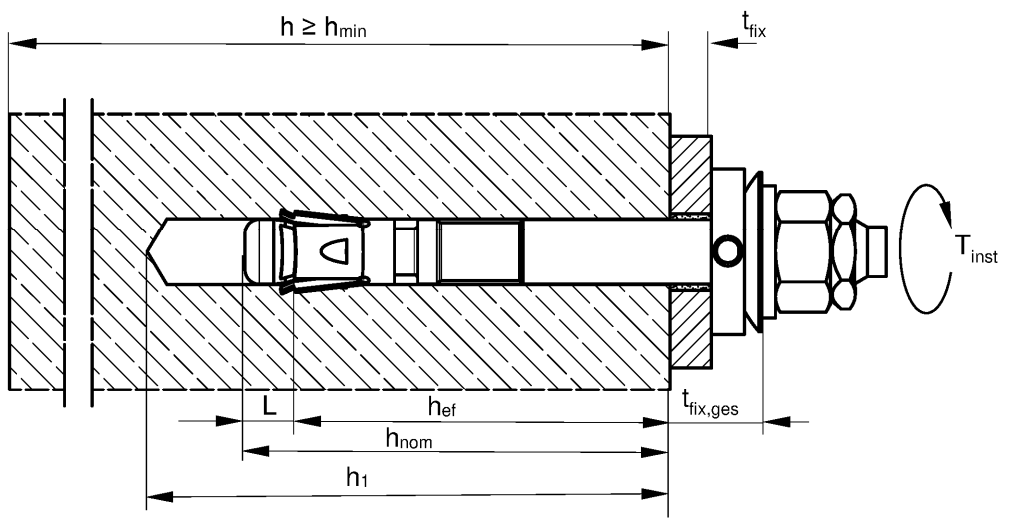

h_{ef}	=	Effective embedment depth
t_{fix}	=	Thickness of the fixture
$t_{fix,ges}$	=	Thickness of the fixture and the filling set
h_1	=	Depth of drill hole to deepest point
h	=	Thickness of the concrete member
h_{min}	=	Minimum thickness of concrete member
h_{nom}	=	Overall fastener embedment depth in the concrete
T_{inst}	=	Required setting torque
L	=	Length from h_{ef} to end of cone bolt

(Fig. not to scale)

Installation instructions:

- Fastener installation carried out by appropriately qualified personnel according to the design drawings and under the supervision of the person responsible for technical matters on the site
- Use of the fastener only as supplied by the manufacturer without exchanging the components of the fastener
- Hammer- or hollow drilling according to Annex B 2
- Drill hole created perpendicular +/- 5° to concrete surface, positioning without damaging the reinforcement
- In case of aborted hole: new drilling at a minimum distance twice the depth of the aborted drill hole or smaller distance if the aborted drill hole is filled with high strength mortar and if under shear or oblique tension load it is not in the direction of load application

Installation instructions: Drilling and cleaning the hole

Types of drills and cleaning

Hammer drill (e.g. fischer Quattric II)		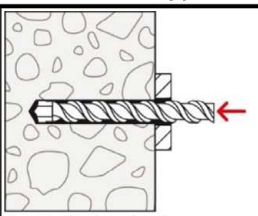 1: Drill the hole	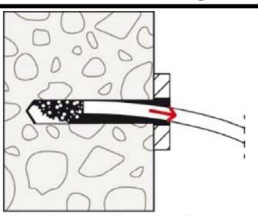 2: Clean the hole	Continue with step 5
Hollow drill (e.g. fischer FHD)		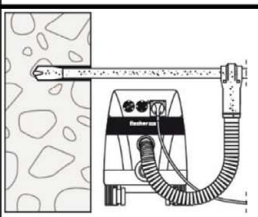 1: Drill the hole with automatic cleaning (e.g. fischer FVC)	Cleaning obsolete	Continue with step 5

Installation instructions: Installation of the fastener

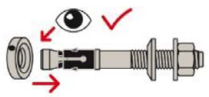	5: Check the position of the conical washer
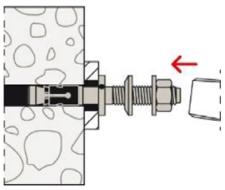	6: Set the fastener. E.g. with fischer FA-ST II setting tool:
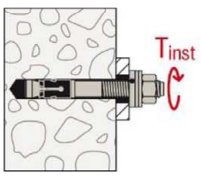	7: Apply T_{inst}
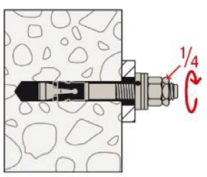	8: Tighten lock nut manually, then use wrench to give another quarter turn
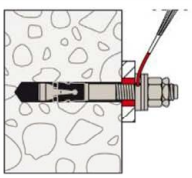	9: The gap between anchor and fixture (annular gap) must be filled with mortar (compressive strength ≥ 50 N/mm² e.g. fischer FIS HB, FIS V Plus, FIS EM Plus or FIS SB) via the fillable conical washer.
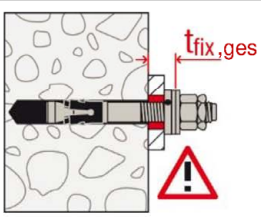	10: Correctly installed fastener

Table C1.1: Characteristic values of **tension** resistance under static and quasi-static action

Size				FAZ II Plus dynamic, FAZ II Plus dynamic R		
				M16	**M20**	**M24**
Steel failure						
Characteristic resistance	FAZ II Plus dynamic	$N_{Rk,s}$	[kN]	78,7	108,4	180,0
	FAZ II Plus dynamic R			83,0	127,6	187,0
Partial factor for steel failure	FAZ II Plus dynamic	γ_{Ms} 1)	[-]	1,40	1,40	1,50
	FAZ II Plus dynamic R				1,45	
Pullout failure						
Effective embedment depth for calculation		h_{ef}	[mm]	65 - 160	100 - 180	125
Characteristic resistance in cracked concrete C20/25		$N_{Rk,p}$ (C20/25)	[kN]	27,0	34,4	48,1
Characteristic resistance in uncracked concrete C20/25				38,6	49,2	68,8
Increasing factor ψ_c for cracked or uncracked concrete $N_{Rk,p} = \psi_c \cdot N_{Rk,p}$ (C20/25)		[-]	C25/30	1,12		
			C30/37	1,22		
			C35/45	1,32		
			C40/50	1,41		
			C45/55	1,50		
			C50/60	1,58		
Installation sensitivity factor		γ_{inst}	[-]	1,0		
Concrete cone and splitting failure						
Factor for uncracked concrete		$k_{ucr,N}$	[-]	11,0 2)		
Factor for cracked concrete		$k_{cr,N}$		7,7 2)		
Characteristic spacing		$s_{cr,N}$	[mm]	$3 \cdot h_{ef}$		
Characteristic edge distance		$c_{cr,N}$		$1,5 \cdot h_{ef}$		
Characteristic spacing for splitting failure		$s_{cr,sp}$	[mm]	$2 \cdot c_{cr,sp}$		
Characteristic edge distance for splitting failure h	≥ 140	$c_{cr,sp}$	[mm]	$2 \cdot h_{ef}$		- 4)
	≥ 160				$2,4 \cdot h_{ef}$	
	≥ 200					$2,2 \cdot h_{ef}$
Characteristic resistance to splitting		$N^0_{Rk,sp}$	[kN]	min $\{N^0_{Rk,c}; N_{Rk,p}\}$ 3)		

1) In absence of other national regulations
2) Based on concrete strength as cylinder strength
3) $N^0_{Rk,c}$ according to EN 1992-4:2018
4) No performance assessed

Table C2.1: Characteristic values of **shear** resistance under static and quasi-static action

Size			FAZ II Plus dynamic, FAZ II Plus dynamic R		
			M16	**M20**	**M24**
Steel failure without lever arm					
Characteristic resistance	FAZ II Plus dynamic with filling	$V^0_{Rk,s}$ [kN]	69,8	85,6	128,3
	FAZ II Plus dynamic with filling R		73,6	117,9	158,1
Partial factor for steel failure		γ_{Ms} 1) [-]	1,25		
Factor for ductility		k_7 [-]	1,0		
Steel failure with lever arm and Concrete pryout failure					
Effective embedment depth for calculation		h_{ef} [mm]	85 - 160	100 - 180	125
Characteristic bending resistance	FAZ II Plus dynamic	$M^0_{Rk,s}$ [Nm]	266	422	864
	FAZ II Plus dynamic R		256	519	898
Factor for pryout failure		k_8 [-]	3,2		
Effective embedment depth for calculation		h_{ef} [mm]	65 - < 85	- 2)	
Characteristic bending resistance	FAZ II Plus dynamic	$M^0_{Rk,s}$ [Nm]	251		
	FAZ II Plus dynamic R		256		
Factor for pryout failure		k_8 [-]	3,2		
Partial factor for steel failure		γ_{Ms} 1) [-]	1,25		
Factor for ductility		k_7 [-]	1,0		
Concrete edge failure					
Effective embedment depth for calculation		l_f [mm]	h_{ef}		
Outside diameter of a fastener		d_{nom} [mm]	16	20	24

1) In absence of other national regulations

2) No performance assessed

Table C3.1: Characteristic values of **tension** resistance under **fire exposure** – not in combination with fatigue loading

Size				FAZ II Plus dynamic, FAZ II Plus dynamic R			
				M16		M20	M24
			$h_{ef} \geq$ [mm]	65 - < 85	85 - 160	100 - 180	125
Characteristic resistance **steel failure**	FAZ II Plus dynamic	$N_{Rk,s,fi}$	R30	9,4		14,7	21,1
			R60	7,7		12,0	17,3
			R90	6,0		9,4	13,5
			R120	5,2		8,1	11,6
	FAZ II Plus dynamic R	$N_{Rk,s,fi}$	R30	21,8		34,3	49,4
			R60	13,2		20,7	29,3
			R90	10,5		18,3	26,4
			R120 [kN]	8,6		17,3	25,0
Characteristic resistance **Concrete cone failure**		$N_{Rk,c,fi}$	R30 - R90	$7{,}7 \cdot h_{ef}^{1,5} \cdot (20)^{0,5} \cdot h_{ef} / 200 / 1000$			
			R120	$7{,}7 \cdot h_{ef}^{1,5} \cdot (20)^{0,5} \cdot h_{ef} / 200 / 1000 \cdot 0{,}8$			
Characteristic resistance **pullout failure**		$N_{Rk,p,fi}$	R30	4,5	6,8	8,6	12,0
			R60				
			R90				
			R120	3,6	5,4	6,9	9,6

Table C3.2: Characteristic values of **shear** resistance under **fire exposure** – not in combination with fatigue loading

FAZ II Plus dynamic				R30		R60	
				$V_{Rk,s,fi,30}$ [kN]	$M^0_{Rk,s,fi,30}$ [Nm]	$V_{Rk,s,fi,60}$ [kN]	$M^0_{Rk,s,fi,60}$ [Nm]
M16	$h_{ef} \geq$	65	[mm]	11,7	19,9	9,1	16,3
M20		100		18,2	39,0	14,2	31,8
M24		125		26,3	67,3	20,5	55,0

FAZ II Plus dynamic				R90		R120	
				$V_{Rk,s,fi,90}$ [kN]	$M^0_{Rk,s,fi,90}$ [Nm]	$V_{Rk,s,fi,120}$ [kN]	$M^0_{Rk,s,fi,120}$ [Nm]
M16	$h_{ef} \geq$	65	[mm]	6,6	12,6	5,3	11,0
M20		100		10,3	24,6	8,3	21,4
M24		125		14,8	42,6	11,9	37,0

Concrete pryout failure according to EN 1992-4:2018

Table C4.1: Characteristic values of **shear** resistance under **fire exposure** – not in combination with fatigue loading

FAZ II Plus dynamic R				R30		R60	
				$V_{Rk,s,fi,30}$ [kN]	$M^0_{Rk,s,fi,30}$ [Nm]	$V_{Rk,s,fi,60}$ [kN]	$M^0_{Rk,s,fi,60}$ [Nm]
M16	$h_{ef} \geq$	65	[mm]	21,8	46,2	13,2	27,9
M20		100		34,3	90,9	20,7	54,9
M24		125		49,4	157,2	29,3	93,1

FAZ II Plus dynamic R				R90		R120	
				$V_{Rk,s,fi,90}$ [kN]	$M^0_{Rk,s,fi,90}$ [Nm]	$V_{Rk,s,fi,120}$ [kN]	$M^0_{Rk,s,fi,120}$ [Nm]
M16	$h_{ef} \geq$	65	[mm]	10,5	22,1	8,6	18,3
M20		100		18,3	48,6	17,3	45,9
M24		125		26,4	84,0	25,0	79,4

Concrete pryout failure according to EN 1992-4:2018

Table C4.2: Minimum spacings and minimum edge distances of fasteners under **fire exposure** for **tension** and **shear** load

Size			FAZ II Plus dynamic, FAZ II Plus dynamic R		
			M16	**M20**	**M24**
Spacing	s_{min}	[mm]	Annex C5		
Edge distance	c_{min}	[mm]	$c_{min} = 2 \cdot h_{ef}$, for fire exposure from more than one side $c_{min} \geq 300$ mm		

Table C5.1: Minimum thickness of concrete members, minimum spacing and minimum edge distance

Size			FAZ II Plus dynamic, FAZ II Plus dynamic R		
			M16	**M20**	**M24**
Minimum edge distance					
Uncracked concrete	c_{min}	[mm]	65	95	135
Cracked concrete				85	100
Corresponding spacing	s		according to Annex C 6		
Minimum thickness of concrete member	h_{min}		140	160	200
Thickness of concrete member	h ≥		max. {h_{min}; 1,5 · h_{ef}}		
Minimum spacing					
Uncracked concrete	s_{min}	[mm]	65	95	100
Cracked concrete					
Corresponding edge distance	c		according to Annex C 6		
Minimum thickness of concrete member	h_{min}		140	160	200
Thickness of concrete member	h ≥		max. {h_{min}; 1,5 · h_{ef}}		
Minimum splitting area					
Uncracked concrete	$A_{sp,req}$	[·1000 mm²]	67	100	117,5
Cracked concrete			50	77	87,5

Table C5.2: Calculated values for minimum spacing and minimum edge distances **for cracked concrete with one edge** (c_2 and $c_3 \geq 1{,}5\ c_1$)

Type of anchor / size		FAZ II Plus dynamic, FAZ II Plus dynamic R			
		M16		**M20**	**M24**
Effective anchorage depth	$h_{ef} \geq$ [mm]	65	85	100	125
Minimum thickness of concrete member	h ≥ [mm]	140	180	160	200
Minimum spacing	s_{min} [mm]	65		95	100
	for c ≥ [mm]	100	75	130	115
Minimum edge distance	c_{min} [mm]	65		85	100
	for s ≥ [mm]	165	85	230	140

Determination of $A_{sp,ef}$ for each existing free edge

Splitting failure applied for minimum edge distance and spacing in depending on h_{ef}

Definition Index:
cal = calculatory
e.g.: $s_{x,y}$
x = load direction
y = number anchor plate

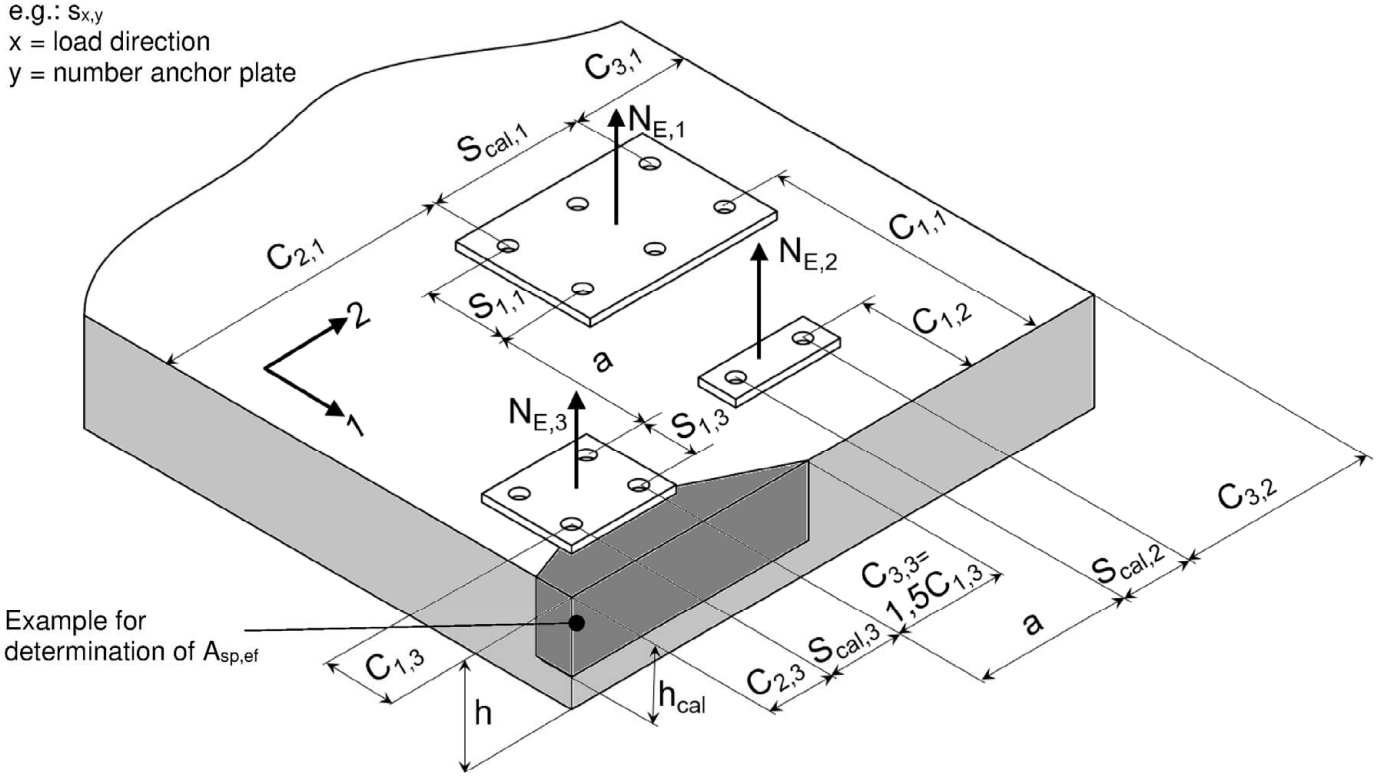

Example for different anchor plates: For considering all free edges the direction 1 and 2 must be swaped.

General formulation for each free edge: $A_{sp,ef} = (c_2 + s_{cal} + c_3) \cdot h_{cal} \geq (n/2) \cdot A_{sp,req}$
with:
Edge distance c_1: $c_{min} \leq c_1$
Edge distance c_2: $c_{min} \leq c_2 \leq 1{,}5 \cdot c_1$
Edge distance c_3: $c_{min} \leq c_3 \leq 1{,}5 \cdot c_1$
Calculation spacing, distance between outer anchors s_{cal}: $s_{min} \leq s_{cal} \leq 3{,}0 \cdot c_1$
Distance between group of anchors a: For $a \geq 3{,}0\ c_1$ no influence between the anchor groups is taken into account.
Number of anchors n of an anchor plate as well close and parallel to the edge
Effective member thickness h_{cal}: $h_{min} \leq h$; $h_{cal} \leq h$; $h_{cal} \leq (h_{ef} + 1{,}5 \cdot c_1)$
c_1, c_2, c_3, h and s_{cal} have to be set in way that the requirement is fullfiled

For the calculation of minimum spacing and minimum edge distance of fasteners in combination with different embedment depths and thicknesses of concrete members the following equation shall be fulfilled:

$$\mathbf{A_{sp,req} < A_{sp,ef}}$$

$A_{sp,req}$ = required splitting area (according to Annex C 5)
$A_{sp,ef}$ = effective splitting area

(Fig. not to scale)

fischer Bolt Anchor FAZ II Plus dynamic	**Annex C 6**
Performances Minimum thickness of member, minimum spacings and edge distances	Appendix 15 / 20

Table C7.1: Characteristic values of **tension and shear** resistance under **seismic action category C1** – not in combination with fatigue loading

Size				FAZ II Plus dynamic, FAZ II Plus dynamic R		
				M16	**M20**	**M24**
Effective embedment depth		h_{ef}	[mm]	85 - 160	100 - 180	125
With filling of the annular gap		α_{gap}	[-]	1,0		
Steel failure $N_{Rk,s,C1} = N_{Rk,s}$; $\gamma_{Ms,C1} = \gamma_{Ms}$ (see Annex C1)						
Pullout failure						
Characteristic resistance in cracked concrete C1		$N_{Rk,p,C1}$	[kN]	27,0	34,4	48,1
Installation sensitivity factor		γ_{inst}	[-]	1,0		
Concrete cone failure and splitting failure $N_{Rk,c,C1} = N^0_{Rk,c}$; $N_{Rk,sp,C1} = N^0_{Rk,sp}$ (see Annex C1)						
Steel failure without lever arm						
Characteristic resistance C1				**FAZ II Plus dynamic**		
		h_{ef}	[mm]	85 - 160	100 - 180	125
	With filling	$V_{Rk,s,C1}$	[kN]	59,3	85,6	102,6
				FAZ II Plus dynamic R		
		h_{ef}	[mm]	85 - 160	100 - 180	125
	With filling	$V_{Rk,s,C1}$	[kN]	62,6	94,3	126,5
Partial factor for steel failure		$\gamma_{Ms,C1}$ [1)]	[-]	1,25		

[1)] In absence of other national regulations

Table C8.1: Characteristic values of **tension and shear** resistance under **seismic action category C2** – not in combination with fatigue loading

Size			FAZ II Plus dynamic, FAZ II Plus dynamic R		
			M16	**M20**	**M24**
With filling of the annular gap	α_{gap}	[-]	1,0		
Steel failure $N_{Rk,s,C2} = N_{Rk,s}$; $\gamma_{Ms,C2} = \gamma_{Ms}$ (see Annex C1)					
Pullout failure					
Characteristic resistance in cracked concrete C2	h_{ef}	[mm]	85 - 160	100 - 180	125
	$N_{Rk,p,C2}$	[kN]	21,5	30,7	39,6
	h_{ef}	[mm]	65 - <85	-[2]	
	$N_{Rk,p,C2}$	[kN]	16,4		
Installation sensitivity factor	γ_{inst}	[-]	1,0		
Concrete cone failure and splitting failure $N_{Rk,c,C2} = N^0_{Rk,c}$; $N_{Rk,sp,C2} = N^0_{Rk,sp}$ (see Annex C1)					
Steel failure without lever arm					
Characteristic resistance C2			**FAZ II Plus dynamic**		
	h_{ef}	[mm]	85 - 160	100 - 180	125
	With filling $V_{Rk,s,C2}$	[kN]	52,4	68,5	102,6
	h_{ef}	[mm]	65 - <85	-[2]	
	With filling $V_{Rk,s,C2}$	[kN]	52,4		
			FAZ II Plus dynamic R		
	h_{ef}	[mm]	85 - 160	100 - 180	125
	With filling $V_{Rk,s,C2}$	[kN]	55,2	104,9	126,5
	h_{ef}	[mm]	65 - <85	-[2]	
	With filling $V_{Rk,s,C2}$	[kN]	55,2		
Partial factor for steel	$\gamma_{Ms,C2}$[1]	[-]	1,25		

[1] In absence of other national regulations

[2] No performance assessed

Table C9.1: Displacements under static and quasi static **tension** loads

Size			FAZ II Plus dynamic, FAZ II Plus dynamic R		
			M16	**M20**	**M24**
Displacement – factor for tensile load[1)]					
δ_{N0} - factor	in cracked concrete	[mm/kN]	0,08	0,07	0,05
$\delta_{N\infty}$ - factor			0,09		0,07
δ_{N0} - factor	in uncracked concrete		0,06	0,05	0,04
$\delta_{N\infty}$ - factor			0,10	0,06	0,05

Table C9.2: Displacements under static and quasi static **shear** loads

Size			**M16**	**M20**	**M24**
Displacement – factor for shear load[2)]					
			FAZ II Plus dynamic		
δ_{V0} - factor	in cracked or uncracked concrete	[mm/kN]	0,10	0,09	0,07
$\delta_{V\infty}$ - factor			0,14	0,15	0,11
			FAZ II Plus dynamic R		
δ_{V0} - factor			0,10	0,11	0,07
$\delta_{V\infty}$ - factor			0,15	0,17	0,11

[1)] Calculation of effective displacement:

$\delta_{N0} = \delta_{N0}$ – factor · N

$\delta_{N\infty} = \delta_{N\infty}$ – factor · N

N = Action tension loading

[2)] Calculation of effective displacement:

$\delta_{V0} = \delta_{V0}$ – factor · V

$\delta_{V\infty} = \delta_{V\infty}$ – factor · V

V = Action shear loading

Table C9.3: Displacements under **tension** loads for **category C2** for all embedment depths

Size			FAZ II Plus dynamic, FAZ II Plus dynamic R		
			M16	**M20**	**M24**
DLS	$\delta_{N,C2\ (DLS)}$	[mm]	4,4	5,6	4,8
ULS	$\delta_{N,C2\ (ULS)}$		12,3	14,4	15,2

[1)] No performance assessed

Table C9.4: Displacements under **shear** loads for **category C2** for all embedment depths

Size			FAZ II Plus dynamic, FAZ II Plus dynamic R		
			M16	**M20**	**M24**
DLS with filling	$\delta_{V,C2\ (DLS)}$	[mm]	1,2	2,0	4,2
ULS with filling	$\delta_{V,C2\ (ULS)}$		3,1	4,4	7,4

[1)] No performance assessed

Table C10.1: Essential characteristic values under **tension and shear fatigue** loads **Design method I** according to **TR 061** – not in combination with seismic- or fire exosure

Required evidence				
	Number of load cycles (n)			
	$n \leq 10^4$	**$10^4 < n \leq 5 \cdot 10^6$**	**$5 \cdot 10^6 < n \leq 10^8$**	**$n > 10^8$**
Tension load capacity[1)]				
$\Delta N_{Rk,s,0,n}$ FAZ II Plus dynamic [kN]	$N^{fat}_{Rk,s} \cdot 0{,}227$	$N^{fat}_{Rk,s} \cdot 10^{(-0{,}299-0{,}085 \cdot \log(n))}$	$N^{fat}_{Rk,s} \cdot 10^{(-0{,}544-0{,}048 \cdot \log(n))}$	$N^{fat}_{Rk,s} \cdot 0{,}11$
$\Delta N_{Rk,s,0,n}$ FAZ II Plus dynamic R [kN]	$N^{fat}_{Rk,s} \cdot 0{,}335$	$N^{fat}_{Rk,s} \cdot 10^{(0{,}427-0{,}226 \cdot \log(n))}$	$N^{fat}_{Rk,s} \cdot 10^{(-0{,}405-0{,}101 \cdot \log(n))}$	$N^{fat}_{Rk,s} \cdot 0{,}05$
	$N^{fat}_{Rk,s} = N_{Rk,s}$ according to Annex C1			
Characteristic fatigue resistance for concrete cone and concrete splitting and pull-out				
$\Delta N_{Rk,c,sp/p,0,n}$ FAZ II Plus dynamic; FAZ II Plus dynamic R [kN]	$N^{fat}_{Rk,c,sp/p} \cdot 0{,}68$	$N^{fat}_{Rk,c,sp/p} \cdot 10^{(0{,}055-0{,}055 \cdot \log(n))} \geq N^{fat}_{Rk,c,sp/p} \cdot 0{,}5$	$N^{fat}_{Rk,c,sp/p} \cdot 0{,}5$	$N^{fat}_{Rk,c,sp/p} \cdot 0{,}5$
	$N^{fat}_{Rk,s} = N_{Rk,s}$ according to Annex C1			
Shear load capacity				
$\Delta V_{Rk,s,0,n}$ FAZ II Plus dynamic [kN]	$V^{fat}_{Rk,s} \cdot 0{,}26$	$V^{fat}_{Rk,s} \cdot 10^{(-0{,}15-0{,}108 \cdot \log(n))}$	$V^{fat}_{Rk,s} \cdot 10^{(-0{,}48-0{,}059 \cdot \log(n))}$	$V^{fat}_{Rk,s} \cdot 0{,}10$
	$V^{fat}_{Rk,s}$ = 62,8 kN for M16; $V^{fat}_{Rk,s}$ = 82,9 kN for M20; $V^{fat}_{Rk,s}$ = 128,3 kN for M24			
$\Delta V_{Rk,s,0,n}$ FAZ II Plus dynamic R [kN]	$V^{fat}_{Rk,s} \cdot 0{,}26$	$V^{fat}_{Rk,s} \cdot 10^{(-0{,}242-0{,}084 \cdot \log(n))}$	$V^{fat}_{Rk,s} \cdot 10^{(-0{,}536-0{,}040 \cdot \log(n))}$	$V^{fat}_{Rk,s} \cdot 0{,}13$
	$V^{fat}_{Rk,s}$ = 62,8 kN for M16; $V^{fat}_{Rk,s}$ = 98,0 kN for M20; $V^{fat}_{Rk,s}$ = 141,2 kN for M24			
Characteristic fatigue resistance for concrete edge and pryout failure				
$\Delta V_{Rk,c,cp,0,n}$ FAZ II Plus dynamic; FAZ II Plus dynamic R [kN]	$V^{fat}_{Rk,c,cp} \cdot 0{,}58$	$V^{fat}_{Rk,c,cp} \cdot 10^{(0{,}08-0{,}08 \cdot \log(n))} \geq V^{fat}_{Rk,c,cp} \cdot 0{,}5$	$V^{fat}_{Rk,c,cp} \cdot 0{,}5$	$V^{fat}_{Rk,c,cp} \cdot 0{,}5$
	$V^{fat}_{Rk,c,cp} = V_{Rk,c,cp}$ according to EN 1992-4 with k_8 according to Annex C2			
Exponents and load-transfer factor				
Exponent for combined load				
$\alpha_s = \alpha_{sn}$ [–]	0,7			
Load-transfer factor				
$\psi_{FN} = \psi_{Fv}$ [–]	0,5			
Exponent for combined load, verification regarding failure modes other than steel failure				
α_c [–]	1,5			

[1)] The annular gap filling can be omitted if there is a pure tension load

Table C11.1: Essential characteristic values under **tension and shear fatigue** loads **Design method II** according to **TR 061** – not in combination with seismic- or fire exosure

Size				FAZ II Plus dynamic, FAZ II Plus dynamic R		
				M 16	M20	M24
Tension load						
Effective embedment depth		h_{ef}	[mm]	65 - 160	100 - 180	125
Steel failure						
Characteristic steel fatigue resistance	FAZ II Plus dynamic	$\Delta N_{Rk,s,0,\infty}$	[kN]	8,7	11,9	19,8
	FAZ II Plus dynamic R			4,2	6,4	9,4
Concrete failure						
Characteristic concrete fatigue resistance		$\Delta N_{Rk,c,0,\infty}$	[kN]	$0,5 \cdot N_{Rk,c}$		
		$\Delta N_{Rk,p,0,\infty}$		$0,5 \cdot N_{Rk,p}$		
		$\Delta N_{Rk,sp,0,\infty}$		$0,5 \cdot N_{Rk,sp}$		
Shear load						
Shear load capacity, steel failure without lever arm						
Characteristic steel fatigue resistance	FAZ II Plus dynamic	$\Delta V_{Rk,s,0,\infty}$	[kN]	6,3	8,3	12,8
	FAZ II Plus dynamic R			8,2	12,7	18,4
Concrete pryout failure						
Characteristic concrete fatigue resistance		$\Delta V_{Rk,cp,0,\infty}$	[kN]	$0,5 \cdot V_{Rk,cp}$		
Concrete edge failure						
Characteristic concrete fatigue resistance		$\Delta V_{Rk,c,0,\infty}$	[kN]	$0,5 \cdot V_{Rk,c}$		
Value of h_{ef} (=l_f) under shear load		h_{ef}	[mm]	65 - 160	100 - 180	125
Effective outside diameter of the anchor		d_{nom}		16	20	24

Exponents and load-transfer factor	
Exponent for combined load	
$\alpha_s = \alpha_{sn}$ [–]	0,7
Load-transfer factor	
$\psi_{FN} = \psi_{Fv}$ [–]	0,5
Exponent for combined load, verification regarding failure modes other than steel failure	
α_c [–]	1,5