Einfach. Sicher. Upat

PRESTANDADEKLARATION

DoP 0409

för Upat injektionssystem UPM 55 (Metallankare för användning i betong) SV

1. Produkttypens unika identifikationskod: **DoP 0409**

2. Avsedd användning/avsedda användningar: **Infästning i efterhand i sprucken och osprucken betong, se bilaga, särskilt bilagor B1 - B17.**

3. Tillverkare: **Upat Vertriebs GmbH, Bebelstraße 11, 79108 Freiburg im Breisgau, Tyskland**

4. Tillverkarens representant: **–**

5. System för bedömning och fortlöpande kontroll av prestanda: **1**

6. Europeiskt bedömningsdokument: **EAD 330499-02-0601, Edition 12/2023**
   Europeisk teknisk bedömning: **ETA-11/0418; 2025-12-04**
   Tekniskt bedömningsorgan: **DIBt- Deutsches Institut für Bautechnik**
   Anmält/anmälda organ: **2873 TU Darmstadt**

7. Angiven prestanda:

Mekanisk hållfasthet och stabilitet (BWR 1)

Karakteristisk bärförmåga för spänning (för statisk och kvasi-statisk belastning):

1) Stålets motståndskraft: se bilaga, särskilt bilagor C1, C2, C19, C21, C23
2) Motstånd mot kombinerat fel vid utdragning och betongkon: se bilaga, särskilt bilagor C4-C16, C24-C34
3) Motstånd i betongkonen: se bilaga, särskilt bilaga C4, C24
4) Kantavstånd för att slippa sprickor under last: se bilaga, särskilt bilaga C4, C24
5) Kraftighet: se bilaga, särskilt bilagor C4-C16, C24-C34
6) Maximal vridkraft vid installation: se bilaga, särskilt bilagor B3,B4,B8,B9,B12
7) Minsta kant- och axelavstånd, Fixturtjocklek: se bilaga, särskilt bilagor B3 - B12

Karakteristisk bärförmåga för skjuvning (för statisk och kvasi-statisk belastning):

8) Motstånd i stålet: se bilaga, särskilt bilagor C1, C2, C3, C20, C22, C23
9) Motstån mot fläkning: se bilaga, särskilt bilagor C4, C24
10) Mostånd mot skador i betong: se bilaga, särskilt bilagor C4, C24

Förflyttningar under kort- och långvarig belastning:

11) Förflyttningar under kort- och långvarig belastning: se bilaga, särskilt bilagor C17,C18,C35,C36
12) Motstånd i stålfiberarmerad betong: NPD

Karakteristiskt motstånd och Förskjutningar för seismiska prestandakategorier C1 och C2:

13) Motstånd mot draglast, kategori C1: se bilaga, särskilt bilagor C37,C38, C40, C41, C43, C44, C46, C47
14) Motstånd mot draglast, kategori C2: se bilaga, särskilt bilagor C38, C42
15) Motstånd mot tvärlast, kategori C1: se bilaga, särskilt bilagor C37,C38,C43,C44
16) Motstånd mot tvärlast, kategori C2: se bilaga, särskilt bilagor C38, C42

Säkerhet vid brand (BWR 2)

17) Reaktion vid brand: Klass (A1)

Motståndskraft mot eld:

18) Brandmotstånd i stålet (tvärlast): se bilaga, särskilt bilagor C48-C51
19) Bondbeständighet under brandförhållanden: se bilaga, särskilt bilaga C51
20) Brandmotstånd i stålet (tvärlast): se bilaga, särskilt bilagor C48-C51

Hygien, hälsa och miljö (BWR 3)

21) Innehåll, frisläppning och / eller frisläppning av farliga ämnen: NPD

8. Lämplig teknisk dokumentation och/eller särskild teknisk dokumentation: **–**

Prestandan för ovanstående produkt överensstämmer med den angivna prestandan. Denna prestandadeklaration har utfärdats i enlighet med förordning (EU) nr 305/2011 på eget ansvar av den tillverkare som anges ovan.

Undertecknad på tillverkarens vägnar av:

i.V.

Dr. Christian Weber, Utvecklingschef

Dieter Pfaff, Chef för Internationella Produktionsfederationen och Kvalitetsledning

Tumlingen, 2026-07-01

Denna DoP har förberetts på olika språk. I händelse av tvist om tolkningen ska den engelska versionen alltid råda.
Bilagan innehåller frivilliga och kompletterande information på engelska som överskrider (det specifika språkets) lagkrav.

Translation guidance Essential Characteristics and Performance Parameters for Annexes

Översättningsråd Grundläggande karaktäristik och prestandaparametrar för Annex

Mechanical resistance and stability (BWR 1) **Mekanisk hållfasthet och stabilitet (BWR 1)**		
Characteristic resistance to tension load (static and quasi-static loading): **Karakteristisk bärförmåga för spänning (för statisk och kvasi-statisk belastning):**		
1	Resistance to steel failure: **Stålets motståndskraft:**	$N_{Rk,s}$ [kN]
2	Resistance to combined pull- out and concrete cone failure: **Motstånd mot kombinerat fel vid utdragning och betongkon:**	τ_{Rk} and/or $\tau_{Rk,100}$ [N/mm^2], ψ_c, ψ^0_{sus},$\psi_{sus,100}$ [-] (BF)
	Resistance to pull-out failure: **Motstånd mot att skruven dras ut:**	$N_{Rk,p}$ and/or $N_{Rk,p,100}$ [kN], ψ_c [-] (BEF)
3	Resistance to concrete cone failure: **Motstånd i betongkonen:**	$c_{cr,N}$ [mm], $k_{cr,N}$, $k_{ucr,N}$ [-]
4	Edge distance to prevent splitting under load: **Kantavstånd för att slippa sprickor under last:**	$c_{cr,sp}$ [mm]
5	Robustness: **Kraftighet:**	γ_{inst} [-]
6	Maximum installation torque: **Maximal vridkraft vid installation:**	max T_{inst} [Nm] (BF)
	Installation torque: **Vridkraft vid installation:**	T_{inst} [Nm] (BEF)
7	Minimum edge distance,spacing and member thickness: **Minsta kant- och axelavstånd, Fixturtjocklek:**	c_{min}, s_{min}, h_{min} [mm]
Characteristic resistance to shear load (static and quasi-static loading): **Karakteristisk bärförmåga för skjuvning (för statisk och kvasi-statisk belastning):**		
8	Resistance to steel failure: **Motstånd i stålet:**	$V^0_{Rk,s}$ [kN], $M^0_{Rk,s}$ [Nm], k_7 [-]
9	Resistance to pry-out failure: **Motstån mot fläkning:**	k_8 [-]
10	Resistance to concrete edge failure: **Mostånd mot skador i betong:**	d_{nom}, l_f [mm]
Displacements under short-term and long-term loading: **Förflyttningar under kort- och långvarig belastning:**		
11	Displacements factors under short-term and long-term loading: **Förflyttningar under kort- och långvarig belastning:**	δ_0, δ_∞ [mm/(N/mm^2)] or [mm/kN]
12	Resistance in steel fibre reinforced concrete: **Motstånd i stålfiberarmerad betong:**	Description
Characteristic resistance and displacements for seismic performance categories C1 and C2: **Karakteristiskt motstånd och Förskjutningar för seismiska prestandakategorier C1 och C2:**		
13	Resistance to tension for seismic performance category C1 **Motstånd mot draglast, kategori C1:**	$N_{Rk,s,C1}$ [kN] (all) $\tau_{Rk,C1}$ [N/mm^2] (BF) $N_{Rk,p,C1}$ [kN] (BEF)
14	Resistance to tension and displacements for seismic performance category C2 **Motstånd mot draglast, kategori C2:**	$N_{Rk,s,C2}$ [kN] (all) $\tau_{Rk,C2}$ [N/mm^2] (BF) $N_{Rk,p,C2}$ [kN] (BEF) $\delta_{N,C2(50\%)}$, $\delta_{N,C2(100\%)}$ [mm] (all)
15	Resistance to shear for seismic performance category C1 **Motstånd mot tvärlast, kategori C1:**	$V_{Rk,s,C1}$ [kN] (all)
16	Resistance to shear load and displacements for seismic performance category C2 **Motstånd mot tvärlast, kategori C2:**	$V_{Rk,s,C2}$ [kN] (all) $\delta_{V,C2(50\%)}$, $\delta_{V,C2(100\%)}$ [mm] (all)
Safety in case of fire (BWR 2) **Säkerhet vid brand (BWR 2)**		
17	Reaction to fire **Reaktion vid brand:**	Class Klass (A1)
Resistance to fire **Motståndskraft mot eld:**		
18	Fire resistance to steel failure (tension load): **Brandmotstånd i stålet (tvärlast):**	$N_{Rk,s,fi}$ [kN]
19	Bond resistance under fire conditions: **Bondbeständighet under brandförhållanden:**	$k_{fi,p}$ (θ) [-], $\tau_{Rk,fi}$ (θ) [N/mm^2] (BF)
20	Fire resistance to steel failure under shear loading: **Brandmotstånd i stålet (tvärlast):**	$V_{Rk,s,fi}$ [kN], $M^0_{Rk,s,fi}$ [Nm]
Hygiene, health and the environment (BWR 3) **Hygien, hälsa och miljö (BWR 3)**		
21	Content, emission and/or release of dangerous substances: **Innehåll, frisläppning och / eller frisläppning av farliga ämnen:**	Description/Level

Specific Part

1 Technical description of the product

The "Upat Injection system UPM 55" is a bonded fastener consisting of a cartridge with injection mortar UPM 55 and a steel element according to Annex A5.

The steel element is placed into a drilled hole filled with injection mortar and is anchored via the bond between metal part, injection mortar and concrete.

The product description is given in Annex A.

2 Specification of the intended use in accordance with the applicable European Assessment Document

The performances given in Section 3 are only valid if the anchor is used in compliance with the specifications and conditions given in Annex B.

The verifications and assessment methods on which this European Technical Assessment is based lead to the assumption of a working life of the anchor of at least 50 or 100 years. The indications given on the working life cannot be interpreted as a guarantee given by the producer, but are to be regarded only as a means for choosing the right products in relation to the expected economically reasonable working life of the works.

3 Performance of the product and references to the methods used for its assessment

3.1 Mechanical resistance and stability (BWR 1)

Essential characteristic	Performance
Characteristic resistance to tension load (static and quasi-static loading)	See Annex B3 to B12, C1 to C16, C19, C21, C23, C24, C25 to C34
Characteristic resistance to shear load (static and quasi-static loading)	See Annex C1 to C4, C20, C22, C23, C24
Displacements under short-term and long-term loading	See Annex C17, C18, C35, C36
Characteristic resistance and displacements for seismic performance categories C1 and C2	See Annex C37 to C47

3.2 Safety in case of fire (BWR 2)

Essential characteristic	Performance
Reaction to fire	Class A1
Resistance to fire	See Annex C48 to C51

3.3 Hygiene, health and the environment (BWR 3)

Essential characteristic	Performance
Content, emission and/or release of dangerous substances	No performance assessed

4 Assessment and verification of constancy of performance (AVCP) system applied, with reference to its legal base

In accordance with the European Assessment Document EAD 330499-02-0601 the applicable European legal act is: [96/582/EC].

The system to be applied is: 1

Installation conditions part 1

Upat Anchor rod UPM A / ASTA (Anchor rod) and commercial standard threaded rod (Threaded rod)

Pre-positioned installation

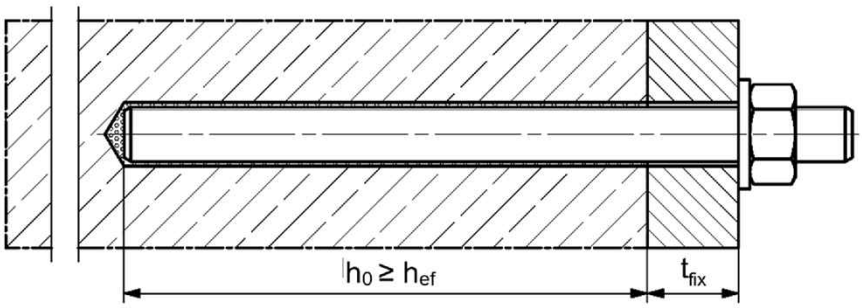

Push through installation (annular gap filled with mortar)

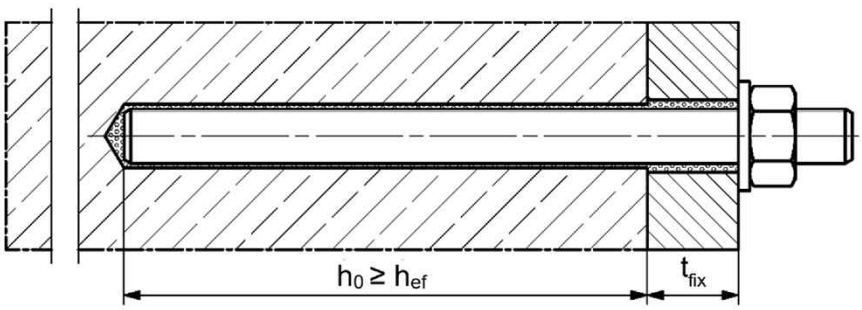

Pre-positioned or push through installation with subsequently injected filling disc (annular gap filled with mortar)

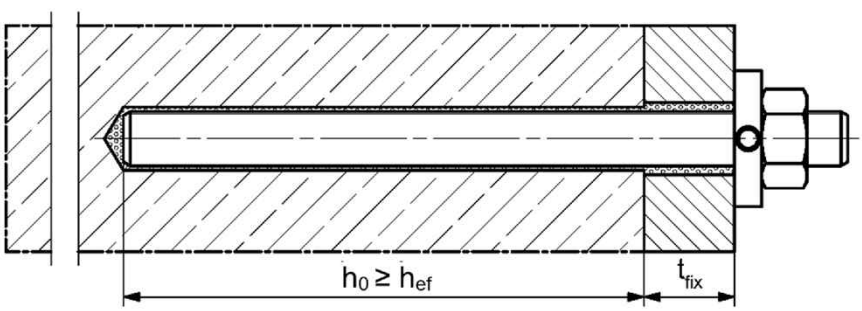

h_0 = drill hole depth

h_{ef} = effective embedment depth

t_{fix} = thickness of fixture

Figures not to scale

Installation conditions part 2

Upat internal threaded anchor IST (Upat IST)

Pre-positioned installation

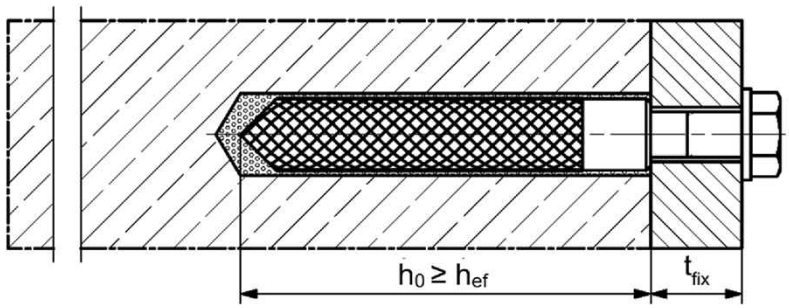

Pre-positioned installation with subsequently injected filling disc (annular gap filled with mortar)

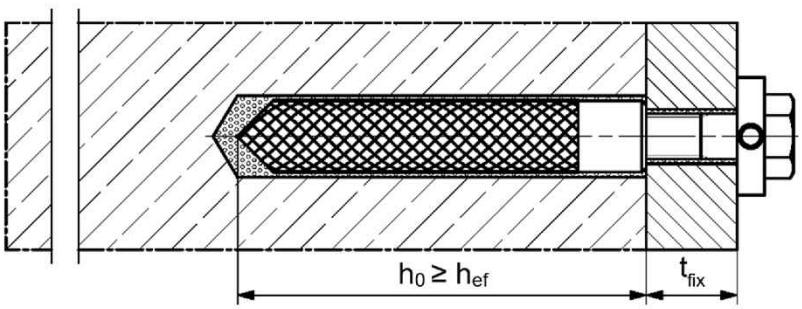

Figures not to scale

h_0 = drill hole depth

h_{ef} = effective embedment depth

t_{fix} = thickness of fixture

Installation conditions part 3

Reinforcing bar

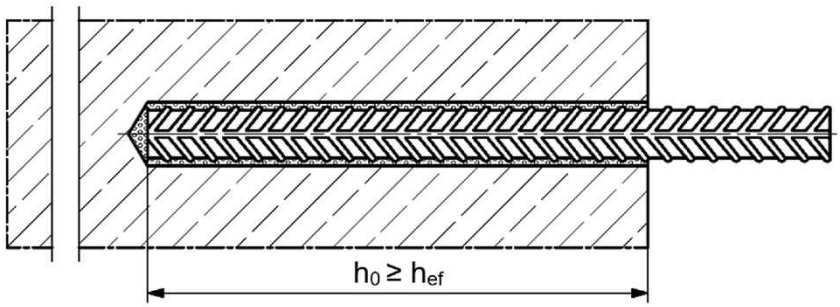

Upat rebar anchor FRA (Upat FRA)

Pre-positioned installation

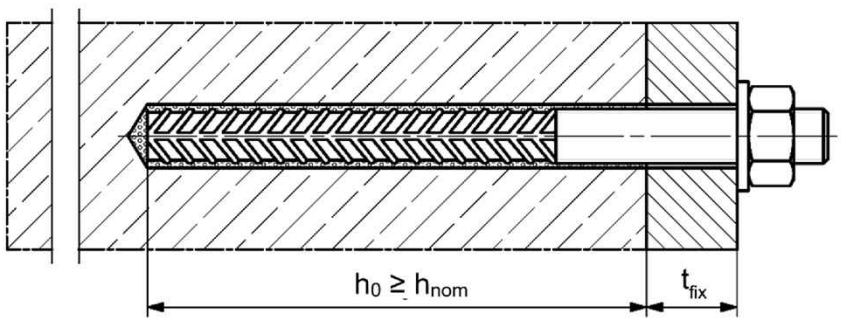

Push through installation (annular gap filled with mortar)

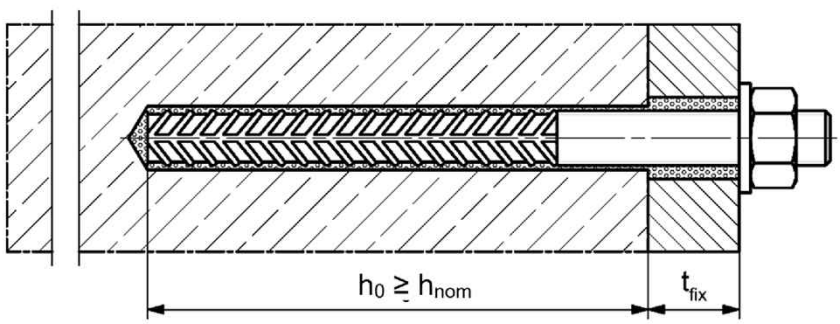

Figures not to scale

h_0 = drill hole depth

h_{ef} = effective embedment depth

t_{fix} = thickness of fixture

h_{nom} = overall fastener embedment depth in the concrete

Upat Injection system UPM 55

Product description
Installation conditions part 3

Annex A3
Appendix 5 / 77

Overview system components part 1

Injection cartridge (shuttle cartridge) with sealing cap; Size: 390 ml, 585 ml, 1500 ml

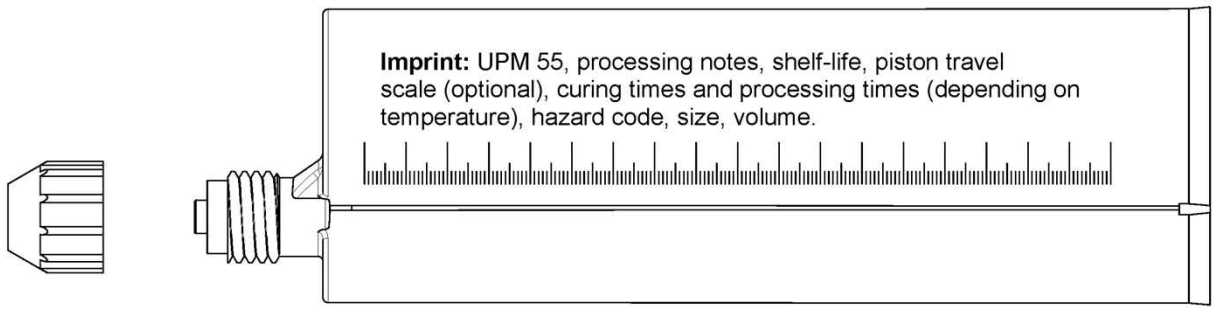

Static mixer Upat MR Plus for injection cartridges 390 ml

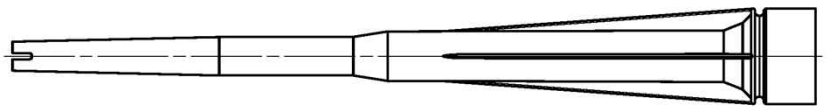

Static mixer Upat UMR for injection cartridges > 390 ml

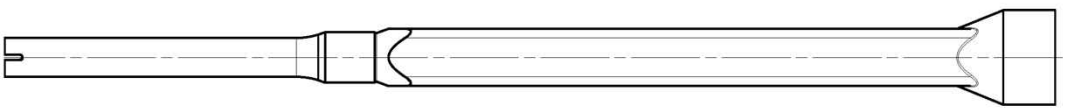

Injection adapter and extension tube Ø 9 for static mixer Upat MR Plus;
Injection adapter and extension tube Ø 9 or Ø 15 for static mixer Upat UMR

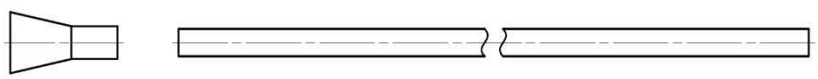

Cleaning brush UP BS / UP BSB



Compressed-air cleaning tool ABP



Figures not to scale

Overview system components part 2

Anchor rod / Threaded rod

Metric size: M8, M10, M12, M14, M16, M20, M22, M24, M27, M30
Fractional size: 3/8", 1/2", 5/8", 3/4", 7/8", 1", 1 1/8"

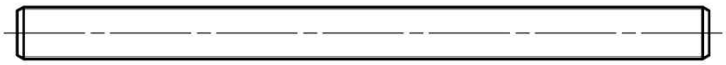

Upat IST

Metric size: M8, M10, M12, M16, M20
Fractional size: 3/8", 1/2", 5/8", 3/4"

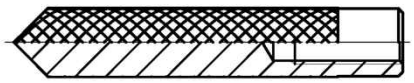

Screw / Anchor rod / Threaded rod / washer / hexagon nut

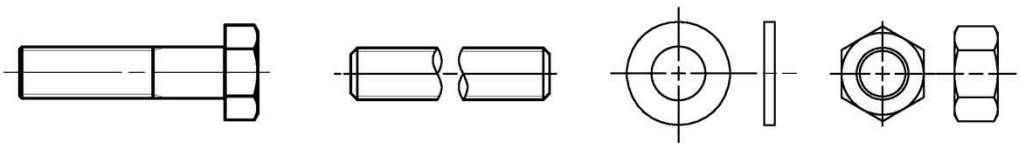

filling disc with injection adapter

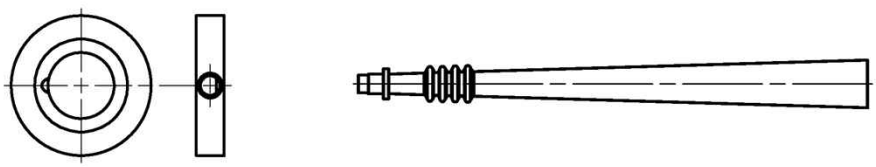

Reinforcing bar

Nominal diameter,
Metric size: ϕ8, ϕ10, ϕ12, ϕ14, ϕ16, ϕ18, ϕ20, ϕ22, ϕ24, ϕ25, ϕ26, ϕ28, ϕ30, ϕ32, ϕ34, ϕ36, ϕ40
Fractional size: #3 (3/8"), #4 (1/2"), #5 (5/8"), #6 (3/4"), #7 (7/8"), #8 (1"), #9 (1,128"), #10 (1,270")



Upat FRA

Metric size: M12, M16, M20, M24



Figures not to scale

Upat Injection system UPM 55

Product description
Overview system components part 2;
steel components

Annex A5
Appendix 7 / 77

Table A6.1: Materials, metric sizes

Part	Designation	Material		
1	Injection cartridge	Mortar, hardener, filler		
	Steel grade	Steel zinc plated (zp, hdg)	Stainless steel R acc. to EN 10088-1: 2023 Corrosion resistance class CRC III acc. to EN 1993-1-4: 2006+A1:2015	High corrosion resistant steel HCR acc. to EN 10088-1: 2023 Corrosion resistance class CRC V acc. to EN 1993-1-4: 2006+ A1:2015
2	Anchor rod / Threaded rod	Property class 4.8, 5.8 or 8.8; EN ISO 898-1:2013 zp ≥ 5 µm, EN ISO 4042:2022 or hot dip galvanised ≥ 40 µm EN ISO 10684:2004+AC:2009 $f_{uk} \leq 1000$ N/mm² $A_5 > 12$ % fracture elongation [1]	Property class 50, 70 or 80; EN ISO 3506-1:2020 1.4401; 1.4404; 1.4578; 1.4571; 1.4439; 1.4362; 1.4062; 1.4662; 1.4462; EN 10088-1: 2023 $f_{uk} \leq 1000$ N/mm² $A_5 > 12$ % fracture elongation [1]	Property class 50, 70 or 80; EN ISO 3506-1:2020 or property class HCR 70 with f_{yk}= 560 N/mm²; 1.4565;1.4529; EN 10088-1: 2023 $f_{uk} \leq 1000$ N/mm² $A_5 > 12$ % fracture elongation [1]
3	Washer ISO 7089:2000	zinc plated ≥ 5 µm, EN ISO 4042:2022 or hot dip galvanised ≥ 40 µm EN ISO 10684:2004+AC:2009	1.4401; 1.4404; 1.4578; 1.4571; 1.4439; 1.4362; EN 10088-1: 2023	1.4565; 1.4529; EN 10088-1: 2023
4	Hexagon nut	Property class 5 or 8 acc. EN ISO 898-2:2022 zinc plated ≥ 5 µm, EN ISO 4042:2022 or hot dip galvanised ≥ 40 µm EN ISO 10684:2004+AC:2009	Property class 50, 70 or 80 acc. EN ISO 3506-2:2020 1.4401; 1.4404; 1.4578; 1.4571; 1.4439; 1.4362; EN 10088-1: 2023	Property class 50, 70 or 80 acc. EN ISO 3506-2:2020 1.4565; 1.4529; EN 10088-1: 2023
5	Upat IST	Property class 5.8 EN ISO 898-1:2013 zinc plated ≥ 5 µm, EN ISO 4042:2022	Property class 70 EN ISO 3506-1:2020; 1.4401; 1.4404; 1.4578; 1.4571; 1.4439; 1.4362; EN 10088-1: 2023	Property class 70 EN ISO 3506-1:2020 1.4565; 1.4529; EN 10088-1: 2023
6	Commercial standard screw or Anchor rod / Threaded rod for Upat IST	Property class 5.8 or 8.8; EN ISO 898-1:2013 zinc plated ≥ 5 µm, EN ISO 4042:2022 $A_5 > 8$ % fracture elongation	Property class 70 EN ISO 3506-1:2020 1.4401; 1.4404; 1.4578; 1.4571; 1.4439; 1.4362; EN 10088-1: 2023 $A_5 > 8$ % fracture elongation	Property class 70 EN ISO 3506-1:2020 1.4565; 1.4529; EN 10088-1: 2023 $A_5 > 8$ % fracture elongation
7	filling disc similar to DIN 6319-G	zinc plated ≥ 5 µm, EN ISO 4042:2022 or hot dip galvanised ≥ 40 µm EN ISO 10684:2004+AC:2009	1.4401; 1.4404; 1.4578; 1.4571; 1.4439; 1.4362; EN 10088-1: 2023	1.4565;1.4529; EN 10088-1: 2023
8	Rebar	EN 1992-1-1:2004 and AC:2010, Annex C Bars and de-coiled rods, class B or C with f_{yk} and k according to NDP or NCI according to EN 1992-1-1/NA; $f_{uk} = f_{tk} = k \cdot f_{yk}$ ($A_5 > 12$ %) [1]		
9	Upat FRA	Rebar part: Bars and de-coiled rods class B or C with f_{yk} and k according to NDP or NCI of EN 1992-1-1:2004+AC:2010 $f_{uk} = f_{tk} = k \cdot f_{yk}$ ($A_5 > 8$ %) Threaded part: Property class 80 EN ISO 3506-1:2020	1.4401, 1.4404, 1.4571, 1.4578, 1.4439, 1.4362, 1.4062 acc. to EN 10088-1:2023 Corrosion resistance class CRC III acc. to EN 1993-1-4:2006+A1:2015 1.4565; 1.4529 acc. to EN 10088-1: 2023 Corrosion resistance class CRC V acc. to EN 1993-1-4: 2006+A1:2015 $f_{uk} \leq 1000$ N/mm²; fracture elongation $A_5 > 8$ %	

[1] Fracture elongation $A_5 > 8$ %, for applications without requirements for seismic performance category C1 or C2.

Table A7.1: Materials, fractional sizes

Part	Designation	Material	
1	Injection cartridge	Mortar, hardener, filler	
	Steel grade	Steel zinc plated (zp, hdg)	Stainless steel R Corrosion resistance class CRC III acc. to EN 1993-1-4: 2006+A1:2015
2	Fractional Threaded rod	ASTM F568M-07, Class 5.8 f_{uk} = 500 N/mm², A_5 > 12 % fracture elongation [1]; zinc plated ≥ 5 µm, EN ISO 4042:2022 ASTM F1554-20, Grade 36 f_{uk} = 400 N/mm², A_5 > 12 % fracture elongation [1]; zinc plated ≥ 5 µm, EN ISO 4042:2022 ASTM F1554-20, Grade 55 f_{uk} = 517 N/mm², A_5 > 12 % fracture elongation [1]; zinc plated ≥ 5 µm; EN ISO 4042:2022 ASTM F1554-20, Grade 105 f_{uk} = 862 N/mm², A_5 > 12 % fracture elongation [1]; zinc plated ≥ 5 µm, EN ISO 4042:2022 ASTM A193/A193M-23, Grade B7 f_{uk} = 862 N/mm², A_5 > 12 % fracture elongation [1]; zinc plated ≥ 5 µm, EN ISO 4042:2022	ASTM F593M-13ae1, Alloy Group 2 f_{uk} = 689 N/mm², f_{uk}, ≤ 5/8 in. (CW1) f_{uk} = 586 N/mm², f_{uk}, ≥ 3/4 in. (CW2) A_5 > 12 % fracture elongation [1]; ASTM A193/A193M-23, Grade B8M, Class 1 f_{uk} = 517 N/mm², A_5 > 12 % fracture elongation [1]; ASTM A193/A193M-23, Grade B8M, Class 2B f_{uk} = 655 N/mm², A_5 > 12 % fracture elongation [1]
3	Washer	ASTM F436/F436M-19 zinc plated ≥ 5 µm, EN ISO 4042:2022 or hot dip galvanised ≥ 40 µm EN ISO 10684:2004+AC:2009	ASTM A240/A240M-23a Type 316
4	Hexagon nut	ASTM A563/A563M-23, Grade DH or ASTM A194/A194M-23, Grade 2H for Threaded rod material ASTM F568M-07, Class 5.8 or ASTM F1554-20, Grade 36, 55, 105 ASTM A194/A194M-23, Grade 2H / 4 / 7 for Threaded rod material ASTM A193/A193M-23, B7 zinc plated ≥ 5 µm, EN ISO 4042:2022	ASTM F593M-13ae1, Alloy Group 2 for Threaded rod material: ASTM F593M-13ae1, Alloy Group 2 / ASTM A193/A193M-23, Grade 8M for Threaded rod material: ASTM A193/A193M-23, Grade B8M, Class 1 or ASTM A193/A193M-23, Grade B8M, Class 2B
5	Upat IST	Property class 5.8 EN ISO 898-1:2013 zinc plated ≥ 5 µm, ISO 4042:2022	Property class 70; EN ISO 3506-1:2020; 1.4401; 1.4404; 1.4578; 1.4571; 1.4439; 1.4362; EN 10088-1: 2023
6	Commercial standard screw or Threaded rod for Upat IST	See Table A7.1, line 2, steel zinc plated, EN ISO 4042:2022	See Table A7.1, line 2, stainless steel R
7	filling disc similar to DIN 6319-G	zinc plated ≥ 5 µm, EN ISO 4042:2022 or hot dip galvanised ≥ 40 µm EN ISO 10684:2004+AC:2009	1.4401; 1.4404; 1.4578; 1.4571; 1.4439; 1.4362; EN 10088-1:2023
8	Reinforcing bar	ASTM A615/A615M-22 (ASTM A767/A767M-19) Grade 40, f_{uk} = 414 N/mm², f_{yk} = 276 N/mm², A_5 > 12 % fracture elongation [1] Grade 60, f_{uk} = 621 N/mm², f_{yk} = 414 N/mm², A_5 > 12 % fracture elongation [1] Grade 75, f_{uk} = 689 N/mm², f_{yk} = 517 N/mm², A_5 > 12 % fracture elongation [1] Grade 60, f_{uk} = 552 N/mm², f_{yk} = 414 N/mm², A_5 > 12 % fracture elongation [1] Grade 80, f_{uk} = 689 N/mm², f_{yk} = 552 N/mm², A_5 > 12 % fracture elongation [1]	

[1] Fracture elongation A_5 > 8 %, for applications without requirements for seismic performance category C1 or C2.

Specifications of intended use part 1

Table B1.1: Overview use and performance categories

Anchorages subject to			UPM 55 with …							
			Anchor rod / Threaded rod		Upat IST		Reinforcing bar		Upat FRA	
Hammer drilling with standard drill bit			all sizes							
Hammer drilling with hollow drill bit 			Nominal drill bit diameter (d_0) 12 mm to 35 mm; 7/16" to 1 3/8" (fischer "FHD", Heller "Duster Expert"; Bosch „Speed Clean"; Hilti "TE-CD, TE-YD",DreBo „D-Plus", DreBo „D-Max")							
Diamond drilling 			all sizes							
Static and quasi static load, in uncracked / cracked concrete		Metric sizes	M8 to M30	Annexes: C1, C4 – C6, C17	M8 to M20	Annexes: C2, C4, C7, C8, C17	ϕ8 to ϕ40	Annexes: C3, C4, C9 – C13 C18	M12 to M24	Annexes: C3, C4, C14 – C16, C18
		Fractional sizes	3/8" to 1 1/8"	Annexes: C19, C20, C24 – C28, C35	3/8" to 3/4"	Annexes: C21, C22, C24, C29 – C31, C35	#3 to #10	Annexes: C23, C24, C32 – C34, C36	-[1]	
Seismic performance category (only hammer drilling with standard / hollow drill bits)		C1	M10 to M30	Annexes: C37, C39, C40	-[1]		ϕ10 to ϕ32	Annexes: C38, C39, C41	-[1]	
			3/8" to 1 1/8"	Annexes: C43, C45, C46			#3 to #10	Annexes: C44, C45, C47		
		C2	M12 M16 M20 M24	Annexes: C38, C39, C42			-[1]			
Use category	I1	dry or wet concrete	all sizes							
	I2	water filled hole	all sizes (not permitted for diamond drilling in combination with cracked concrete and working life 100 years)							
Installation direction			D3 (downward and horizontal and upwards (e.g. overhead) installation)							
Installation temperature			$T_{i,min}$ = -5 °C to $T_{i,max}$ = +40 °C for the standard variation of temperature after installation							
Resistance to fire			Annexes: C48 – C51		-[1]		-[1]		-[1]	
In-service temperature		Temperature range I	-40 °C to +40 °C	(max. short term temperature +40 °C; max. long term temperature +24 °C)						
		Temperature range II	-40 °C to +60 °C	(max. short term temperature +60 °C; max. long term temperature +35 °C)						
		Temperature range III	-40 °C to +72 °C	(max. short term temperature +72 °C; max. long term temperature +50 °C)						

[1] no performance assessed.

Specifications of intended use part 2

Base materials:

- Compacted reinforced or unreinforced normal weight concrete without fibres of strength classes C20/25 to C50/60 according to EN 206:2013+A2:2021.

Use conditions (Environmental conditions):

- Fastener intended for use in structures subject to dry, internal conditions (all materials).
- For all other conditions according to EN 1993-1-4:2006+A1:2015 corresponding to corrosion resistance classes to Annex A6 table A6.1 (metric sizes) or Annex A7 Table A7.1 (fractional sizes).

Design:

- Fastenings are designed under the responsibility of an engineer experienced in fastenings and concrete work.
- Verifiable calculation notes and drawings are to be prepared taking account of the loads to be anchored. The position of the fastener is indicated on the design drawings (e. g. position of the fastener relative to reinforcement or to supports, etc.).
- Fastenings are designed in accordance with:
  EN 1992-4:2018 and EOTA TR 082 from June 2023.

Installation:

- Fastener installation is to be carried out by appropriately qualified personnel and under the supervision of the person responsible for technical matters of the site.
- Fastening depth should be marked and adhered to installation.
- Overhead installation is allowed (necessary equipment see installation instruction).

Table B3.1: Installation parameters for **metric Anchor rods / Threaded rods**

Anchor rods / Threaded rods				**M8**	**M10**	**M12**	**M14**	**M16**	**M20**	**M22**	**M24**	**M27**	**M30**
Nominal drill hole diameter		d_0	[mm]	10	12	14	16	18	22 24 [1)]	25	28	30	35
Drill hole depth		h_0		$h_0 \geq h_{ef}$									
Effective embedment depth		$h_{ef,\,min}$		60	60	70	75	80	90	93	96	108	120
		$h_{ef,\,max}$		160	200	240	280	320	400	440	480	540	600
Diameter of the clearance hole of the fixture	pre-positioned installation	d_f		9	12	14	16	18	22	24	26	30	33
	push through installation	d_f		12	14	16	18	20	26	28	30	33	40
Minimum thickness of concrete member		h_{min}		$h_{ef} + 30$			$h_{ef} + 2d_0$						
Maximum installation torque		max T_{inst}	[Nm]	10	20	40	50	60	120	135	150	200	300

[1)] Both drill hole diameters can be used.

Anchor rod / Threaded rod

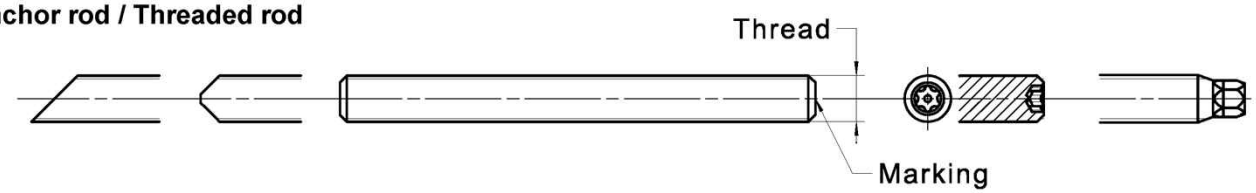

Marking (on random place) Upat anchor rod:

Steel zinc plated PC [1)] 8.8	• or +	Steel hot-dip PC [1)] 8.8	•
High corrosion resistant steel HCR PC [1)] 50	•	High corrosion resistant steel HCR PC [1)] 70	-
High corrosion resistant steel HCR PC [1)] 80	(	Stainless steel R property class 50	~
Stainless steel R property class 80	*		

Alternatively: Colour coding according to DIN 976-1:2016

[1)] PC = property class

Installation conditions:

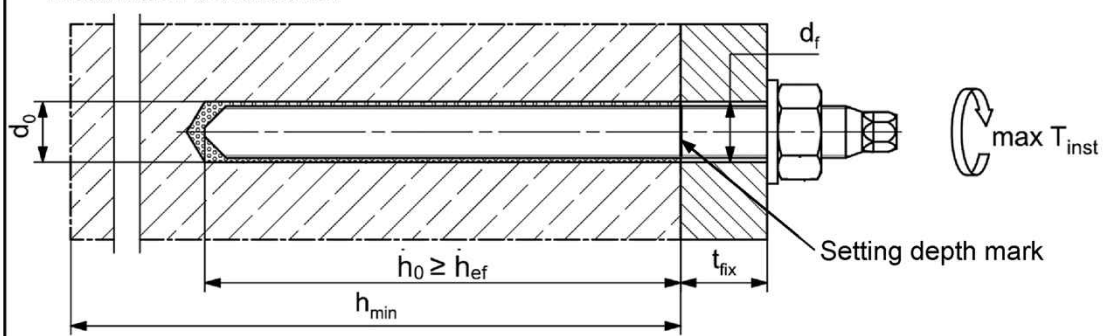

Threaded rods, washers and hexagon nuts may also be used if the following requirements are fulfilled:

- Materials, dimensions and mechanical properties according to **Annex A6**, **Table A6.1**.
- Inspection certificate 3.1 according to EN 10204:2004, the documents have to be stored.
- Setting depth is marked.
- Steel load-bearing capacities for hot-dip galvanised parts are only valid if the threaded rod and nut are correctly paired. The strength class of the nut must be one strength class higher than that of the threaded rod (≥ M12 in combination with tolerance class 6AX in accordance with EN ISO 10684:2004+AC:2009 two strength classes higher). The pairing of undersized threaded rods (additional designation U according to EN ISO 10684) with oversized nuts (additional designation Z or X according to EN ISO 10684) is not permitted under any circumstances

Figures not to scale

Upat Injection system UPM 55

Intended use
Installation parameters Anchor rods / Threaded rods (metric size)

Annex B3
Appendix 12 / 77

Table B4.1: Installation parameters for **fractional Threaded rods**

Threaded rods				**3/8"**	**1/2"**	**5/8"**	**3/4"**	**7/8"**	**1"**	**1 1/8"**
Nominal drill hole diameter		d_0	[mm]	11,1	14,3	19,1	22,2	25,4	28,6	31,8
			[inch]	7/16	9/16	3/4	7/8	1	1 1/8	1 1/4
Drill hole depth		h_0		$h_0 \geq h_{ef}$						
Effective embedment depth		$h_{ef,\,min}$		60,0	70,0	79,0	89,0	89,0	102,0	178,0
		$h_{ef,\,max}$		191,0	254,0	318,0	381,0	445,0	508,0	572,0
Diameter of the clearance hole of the fixture	pre-positioned installation	d_f	[mm]	8,9	11,9	14,0	16,0	18,0	22,1	23,9
	push through installation	d_f		11,9	14,0	16,0	18,0	20,1	25,9	27,9
Minimum thickness of concrete member		h_{min}		$h_{ef} + 30$		$h_{ef} + 2d_0$				
Maximum installation torque		max T_{inst}	[Nm]	18	41	60	107	136	173	180

[1] Both drill hole diameters can be used.

Threaded rods

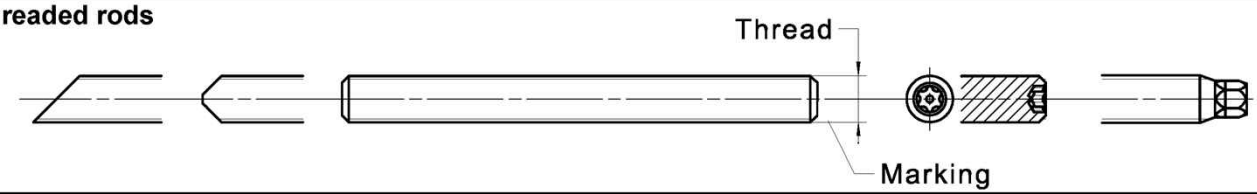

Installation conditions:

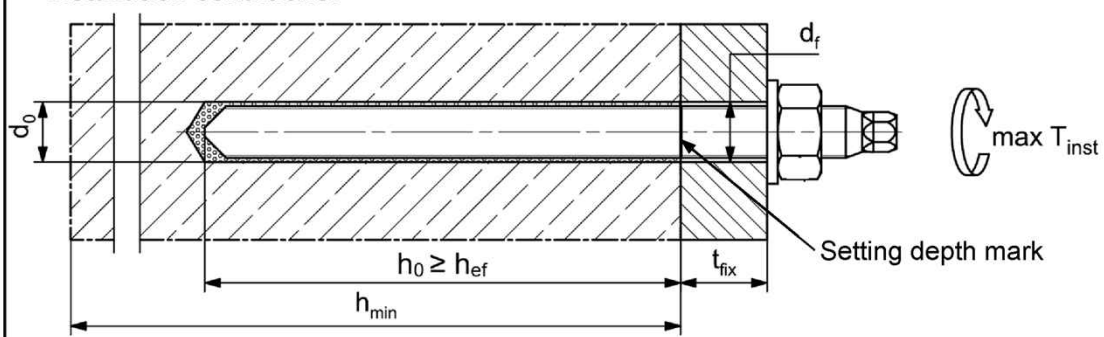

Additional requirements for Threaded rods, washers and hexagon nuts:

- Materials, dimensions, and mechanical properties according to **Annex A7**, **Table A7.1**.
- Inspection certificate 3.1 according to EN 10204:2004, the documents shall be stored.
- Setting depth is marked.
- Steel load-bearing capacities for hot-dip galvanised parts are only valid if the threaded rod and nut are correctly paired. The strength class of the nut must be one strength class higher than that of the threaded rod (≥ M12 in combination with tolerance class 6AX in accordance with EN ISO 10684:2004+AC:2009 two strength classes higher). The pairing of undersized threaded rods (additional designation U according to EN ISO 10684) with oversized nuts (additional designation Z or X according to EN ISO 10684) is not permitted under any circumstances

Figures not to scale

Table B5.1: Minimum spacing and minimum edge distance for **metric Anchor rods** and **metric reinforcing bars**

Metric Anchor rods			**M8**	**M10**	**M12**	**M14**	**M16**	**-**	**M20**	**M22**	**M24**
Metric Reinforcing bars (nominal diameter)		**ϕ**	**8**	**10**	**12**	**14**	**16**	**18**	**20**	**22**	**24**
Minimum edge distance											
Uncracked / cracked concrete	c_{min}	[mm]	40	45	45	45	50	55	55	55	60
Minimum spacing	s_{min}		according to Annex B7								
Minimum spacing											
Uncracked / cracked concrete	s_{min}	[mm]	40	45	55	60	65	85	85	95	105
Minimum edge distance	c_{min}		according to Annex B7								
Required projecting area											
Uncracked concrete	$A_{sp,req}$	[1000 mm²]	8,0	13,0	21,5	23,0	24,0	38,5	38,5	39,5	40,0
Cracked concrete			6,5	10,0	16,5	17,5	18,5	29,5	29,5	30,0	30,5

Anchor rods			**-**	**-**	**M27**	**-**	**M30**	**-**	**-**	**-**	**-**
Reinforcing bars (nominal diameter)		**ϕ**	**25**	**26**	**-**	**28**	**30**	**32**	**34**	**36**	**40**
Minimum edge distance											
Uncracked / cracked concrete	c_{min}	[mm]	75	75	75	80	80	120	120	135	175
Minimum spacing	s_{min}		according to Annex B7								
Minimum spacing											
Uncracked / cracked concrete	s_{min}	[mm]	120	120	120	140	140	160	160	160	160
Minimum edge distance	c_{min}		according to Annex B7								
Required projecting area											
Uncracked concrete	$A_{sp,req}$	[1000 mm²]	47,5	47,5	47,5	64,0	64,0	64,0	64,0	64,0	64,0
Cracked concrete			36,5	36,5	36,5	49,0	49,0	49,0	49,0	49,0	49,0

Splitting failure for minimum edge distance and spacing in dependence of the effective embedment depth h_{ef}.

For the calculation of minimum spacing and minimum edge distance of anchors in combination with different embedment depths and thicknesses of concrete members the following equation shall be fulfilled:

$$\mathbf{A_{sp,req} < A_{sp,t}}$$

$A_{sp,req}$ = required projecting area,
$A_{sp,t}$ = effective projecting area (according to **Annex B7**).

Table B6.1: Minimum spacing and minimum edge distance for **fractional Threaded rods** and **reinforcing bars**

Fractional Threaded rods			**3/8"**	**1/2"**	**5/8"**	**3/4"**	**7/8"**	**1"**	**1 1/8"**	**-**
Fractional Reinforcing bars			**#3**	**#4**	**#5**	**#6**	**#7**	**#8**	**#9**	**#10**
Minimum edge distance										
Uncracked / cracked concrete	c_{min}	[mm]	45	45	50	55	60	75	80	120
Minimum spacing	s_{min}		according to Annex B7							
Minimum spacing										
Uncracked / cracked concrete	s_{min}	[mm]	45	60	65	85	105	120	140	160
Minimum edge distance	c_{min}		according to Annex B7							
Required projecting area										
Uncracked concrete	$A_{sp,req}$	[1000 mm²]	12,5	21,0	24,5	36,0	39,5	43,5	40,5	64,5
Cracked concrete			9,5	16,0	18,5	27,5	30,0	33,5	31,0	49,5

Splitting failure for minimum edge distance and spacing in dependence of the effective embedment depth h_{ef}.

For the calculation of minimum spacing and minimum edge distance of anchors in combination with different embedment depths and thicknesses of concrete members the following equation shall be fulfilled:

$$\mathbf{A_{sp,req} < A_{sp,t}}$$

$A_{sp,req}$ = required projecting area,
$A_{sp,t}$ = effective projecting area (according to **Annex B7**).

Table B7.1: Projecting area $A_{sp,t}$ with concrete member thickness $h > h_{ef} + 1{,}5 \cdot c$ and $h \geq h_{min}$

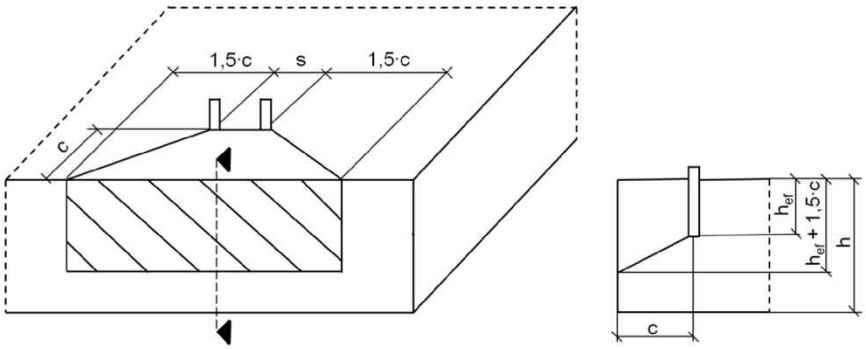

Single fastener	$A_{sp,t} = (3 \cdot c) \cdot (h_{ef} + 1{,}5 \cdot c)$	[mm²]	with $c \geq c_{min}$
Group of fastener with $s > 3 \cdot c$	$A_{sp,t} = (6 \cdot c) \cdot (h_{ef} + 1{,}5 \cdot c)$	[mm²]	
Group of fastener with $s \leq 3 \cdot c$	$A_{sp,t} = (3 \cdot c + s) \cdot (h_{ef} + 1{,}5 \cdot c)$	[mm²]	with $c \geq c_{min}$ and $s \geq s_{min}$

Table B7.2: Projecting area $A_{sp,t}$ with concrete member thickness $h \leq h_{ef} + 1{,}5 \cdot c$ and $h \geq h_{min}$

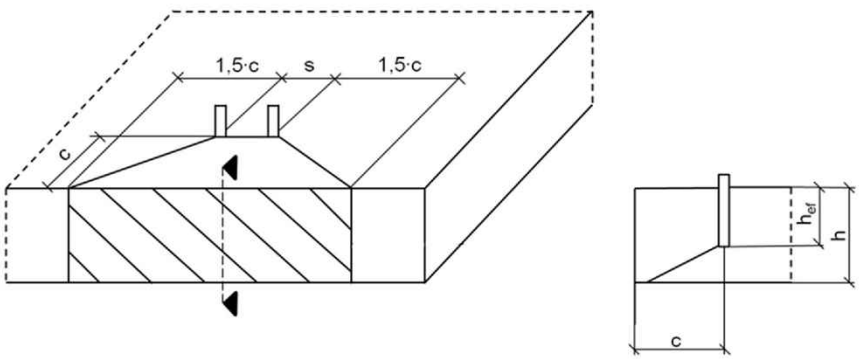

Single anchor	$A_{sp,t} = 3 \cdot c \cdot$ existing h	[mm²]	with $c \geq c_{min}$
Group of fastener with $s > 3 \cdot c$	$A_{sp,t} = 6 \cdot c \cdot$ existing h	[mm²]	
Group of fastener with $s \leq 3 \cdot c$	$A_{sp,t} = (3 \cdot c + s) \cdot$ existing h	[mm²]	with $c \geq c_{min}$ and $s \geq s_{min}$

Edge distance and axial spacing shall be rounded up to at least 5 mm.

Figures not to scale

Upat Injection system UPM 55

Intended use
Minimum thickness of concrete member for Anchor rods / Threaded rods, minimum spacing and edge distance

Annex B7
Appendix 16 / 77

Table B8.1: Installation parameters for **metric Upat IST**

Upat IST		Thread	M8	M10	M12	M16	M20
Diameter of anchor	$d_{nom} = d_H$		12,0	15,7	18,0	22,0	28,0
Nominal drill hole diameter	d_0		14	18	20	24	32
Drill hole depth	h_0		$h_0 \geq h_{ef} = L_H$				
Effective embedment depth ($h_{ef} = L_H$)	h_{ef}		90	90	125	160	200
Minimum spacing and minimum edge distance	s_{min} = c_{min}	[mm]	55	65	75	95	125
Diameter of clearance hole in the fixture	d_f		9	12	14	18	22
Minimum thickness of concrete member	h_{min}		120	125	165	205	260
Maximum screw-in depth	$l_{E,max}$		18	23	26	35	45
Minimum screw-in depth	$l_{E,min}$		8	10	12	16	20
Maximum installation torque	max T_{inst}	[Nm]	10	20	40	80	120

Upat IST

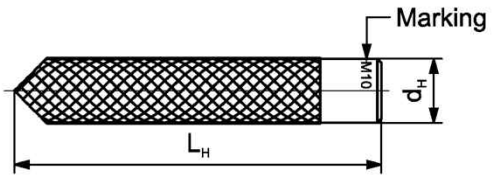

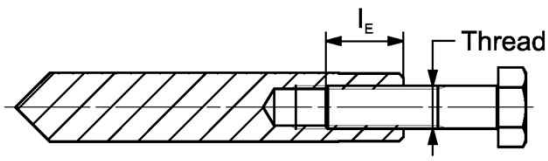

Marking: Anchor size e. g.: **M10**
Stainless steel → additional **R**; e.g.: **M10 R**
High corrosion resistant steel → additional **HCR**; e.g.: **M10 HCR**

Retaining screw or threaded rods (including nut and washer) must comply with the appropriate material and strength class of **Annex A6**, **Table A6.1**.

Installation conditions:

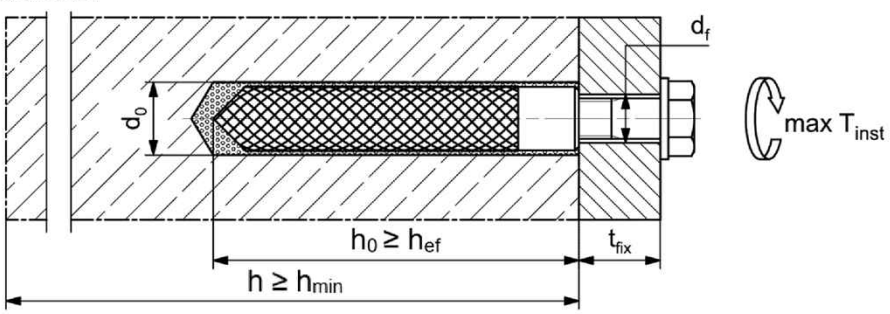

Figures not to scale

Upat Injection system UPM 55

Intended use
Installation parameters internal threaded Upat IST (metric size)

Annex B8
Appendix 17 / 77

Table B9.1: Installation parameters for **fractional Upat IST**

Upat IST		**Thread**	**3/8"**	**1/2"**	**5/8"**	**3/4"**
Diameter of anchor	$d_{nom} = d_H$	[mm]	15,7	18	22	28
Nominal drill hole diameter	d_0	[mm]	18	20	24	32
		[inch]	3/4	13/16	1	1 1/4
Drill hole depth	h_0	[mm]	$h_0 \geq h_{ef} = L_H$			
Effective embedment depth ($h_{ef} = L_H$)	h_{ef}		90	125	160	200
Minimum spacing and minimum edge distance	s_{min} = c_{min}		65	75	95	125
Diameter of clearance hole in the fixture	d_f		12	14	18	22
Minimum thickness of concrete member	h_{min}		125	165	205	260
Maximum screw-in depth	$l_{E,max}$		23	26	35	45
Minimum screw-in depth	$l_{E,min}$		10	12	16	20
Maximum installation torque	max T_{inst}	[Nm]	20	40	80	120

Upat IST

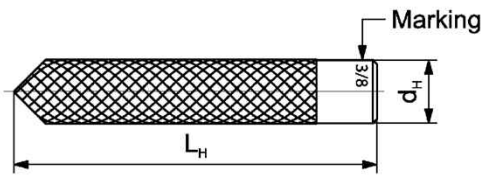

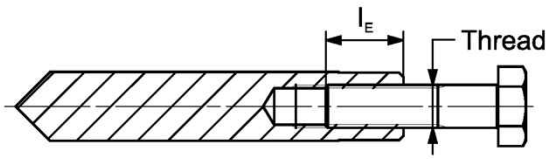

Marking: Anchor size e. g.: **M 3/8**
Stainless steel → additional **R**; e.g.: **M 3/8 R**

Retaining screw or threaded rods (including nut and washer) must comply with the appropriate material and strength class of **Annex A7**, **Table A7.1**.

Installation conditions:

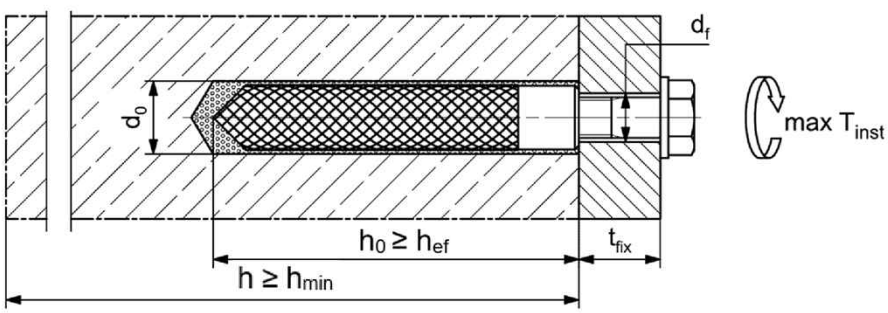

Figures not to scale

Upat Injection system UPM 55

Intended use
Installation parameters internal threaded anchors Upat IST (fractional size)

Annex B9
Appendix 18 / 77

Table B10.1: Installation parameters for **metric reinforcing bars** [1)]

Nominal diameter of the bar		**ϕ**	**8**[2)]	**10**[2)]	**12**[2)]	**14**	**16**	**18**	**20**	**22**	**24**
Nominal drill hole diameter	d_0	[mm]	10 | 12	12 | 14	14 | 16	18	20	25	25	30	30
Drill hole depth	h_0		$h_0 \geq h_{ef}$								
Effective embedment depth	$h_{ef,min}$		60	60	70	75	80	85	90	94	98
	$h_{ef,max}$		160	200	240	280	320	360	400	440	480
Minimum thickness of concrete member	h_{min}		$h_{ef} + 30$		$h_{ef} + 2d_0$						

Nominal diameter of the bar		**ϕ**	**25**	**26**	**28**	**30**	**32**	**34**	**36**	**40**	**-**
Nominal drill hole diameter	d_0	[mm]	30	35	35	40	40	40	45	55	-
Drill hole depth	h_0		$h_0 \geq h_{ef}$								
Effective embedment depth	$h_{ef,min}$		100	104	112	120	128	136	144	160	-
	$h_{ef,max}$		500	520	560	600	640	680	720	800	-
Minimum thickness of concrete member	h_{min}		$h_{ef} + 2d_0$								

[1)] Detailed calculation according to **Annex B7**.
[2)] Both drill hole diameters can be used.

Reinforcing bar

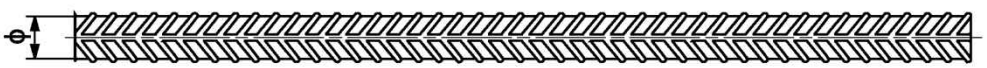

- The minimum value of related rib area $f_{R,min}$ must fulfil the requirements of EN 1992-1-1:2004+AC:2010.
- The rib height must be within the range: $0{,}05 \cdot \phi \leq h_{rib} \leq 0{,}07 \cdot \phi$
  (ϕ = Nominal diameter of the bar, h_{rib} = rib height).

Installation conditions:

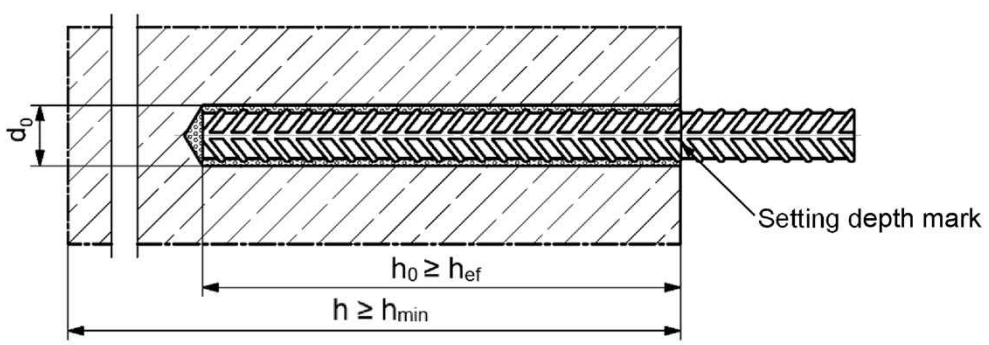

Figures not to scale

Upat Injection system UPM 55

Intended use
Installation parameters reinforcing bars (metric size)

Annex B10
Appendix 19 / 77

Table B11.1: Installation parameters for **fractional reinforcing bars** [1)]

Rebar size			**#3**	**#4**	**#5**	**#6**	**#7**	**#8**	**#9**	**#10**
Nominal drill hole diameter	d_0	[mm]	12,7	15,9	19,1	22,2	28,6	31,8	34,9	38,1
		[inch]	1/2	5/8	3/4	7/8	1 1/8	1 1/4	1 3/8	1 1/2
Drill hole depth	h_0	[mm]	$h_0 \geq h_{ef}$							
Effective embedment depth	$h_{ef,min}$		60	70	79	89	89	102	114	127
	$h_{ef,max}$		191	254	318	381	445	508	572	635
Minimum thickness of concrete member	h_{min}		$h_{ef} + 30$		$h_{ef} + 2d_0$					

[1)] Detailed calculation according to **Annex B7**.

Reinforcing bar



- Reinforcing bars, acc. to ASTM A615/A615M-22 (ASTM A767/A767M-19).
  Materials, dimensions, and mechanical properties according to **Annex A7**, **Table A7.1**.

Installation conditions:

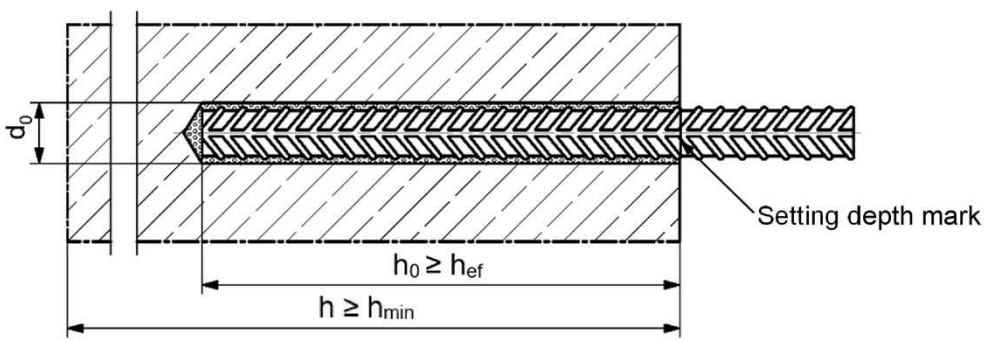

Figures not to scale

Upat Injection system UPM 55

Intended use
Installation parameters reinforcing bars (fractional size)

Annex B11
Appendix 20 / 77

Table B12.1: Installation parameters for **metric Upat FRA**

Upat FRA		**Thread**	**M12**[1]		**M16**	**M20**	**M24**
Nominal diameter of the bar	ϕ		12		16	20	25
Nominal drill hole diameter	d_0		14	16	20	25	30
Drill hole depth	h_0		$h_{ef} + l_e = h_{nom}$				
Effective embedment depth	$h_{ef,min}$		70		80	90	96
	$h_{ef,max}$		140		220	300	380
Distance concrete surface to welded joint	l_e		100				
Minimum spacing and minimum edge distance	s_{min} = c_{min}	[mm]	55		65	85	105
Diameter of clearance hole in the fixture: pre-positioned anchorage	$\leq d_f$		14		18	22	26
Diameter of clearance hole in the fixture: push through anchorage	$\leq d_f$		18		22	26	32
Minimum thickness of concrete member	h_{min}		$h_0 + 30$		$h_0 + 2d_0$		
Maximum installation torque	max T_{inst}	[Nm]	40		60	120	150

[1] Both drill hole diameters can be used.

Upat FRA

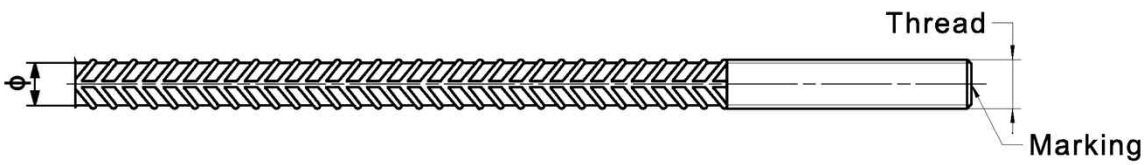

Marking frontal e.g.: FRA (for stainless steel R)
FRA HCR (for high corrosion resistant steel HCR)

Installation conditions:

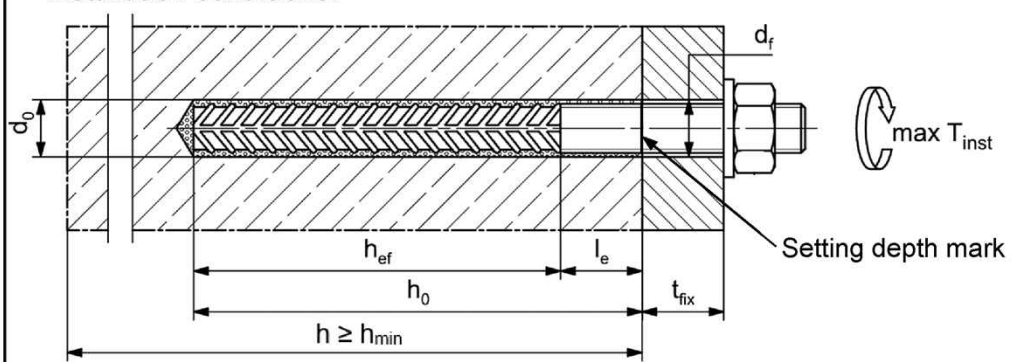

Figures not to scale

Upat Injection system UPM 55

Intended use
Installation parameters Upat FRA (metric size)

Annex B12
Appendix 21 / 77

Table B13.1: Parameters of the **cleaning brush UP BS / UP BSB** (steel brush with steel bristles)

The size of the cleaning brush refers to the drill hole diameter.

Nominal drill hole diameter d_0	[mm]	10	12	14	16	18	20	22	24	25	28	30	32	35	40	45	55
	[inch]	-	7/16	1/2	5/8	3/4	13/16		1		1 1/8	1 1/4		1 3/8	1 1/2	-	-
Steel brush diameter BS d_b	[mm]	11	14	16	20		25		26	27	30	40			-	-	-
Steel brush diameter BSB d_b	[mm]	-	-	-	-	-	-	-	-	-	-	-	-	-	42	47	58

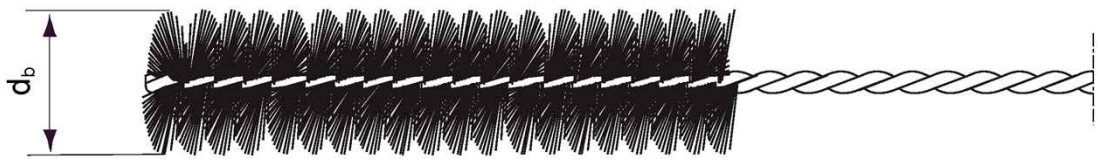

Table B13.2: Conditions for **use** static mixer **without an extension tube**

Nominal drill hole diameter d_0		[mm]	10	12	14	16	18	20	22	24	25	28	30	32	35	40	45	55
		[inch]	–	7/16	1/2	5/8	3/4	13/16	-	1	-	1 1/8	1 1/4		1 3/8	1 1/2	-	-
Drill hole depth h_0 by using	Upat MR Plus	[mm]	≤90		≤120	≤140	≤150	≤160	≤170	≤190	≤210							
	Upat UMR	[mm]	-		≤90			≤260				≤280						

Table B13.3: **Maximum processing time** of the mortar and **minimum curing time** (During the curing time of the mortar the concrete temperature may not fall below the listed minimum temperature)

Temperature at anchoring base [°C]	Maximum processing time t_{work}	Minimum curing time [1] t_{cure}
-5 to 0 [2]	240 min	200 h
> 0 to 5 [2]	150 min	90 h
> 5 to 10	120 min	40 h
> 10 to 20	30 min	18 h
> 20 to 30	14 min	10 h
> 30 to 40	7 min	5 h

[1] In wet concrete or water filled holes the curing times must be doubled.
[2] Minimal cartridge temperature +5 °C.

Installation instructions part 1

Drilling and cleaning the hole (hammer drilling with standard drill bit)

1	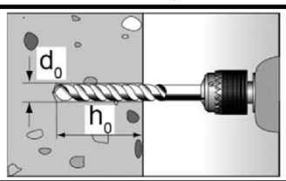	Drill the hole. Nominal drill hole diameter $\mathbf{d_0}$ and drill hole depth $\mathbf{h_0}$ see **Tables B3.1, B4.1, B8.1, B9.1, B10.1, B11.1, B12.1**.
2	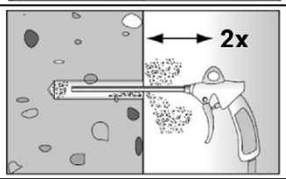	Cleaning the drill hole: Blow out the drill hole twice, with oil-free compressed air (p ≥ 6 bar). 
3	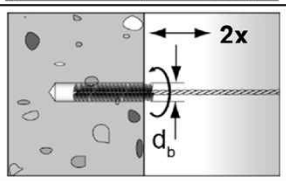	Brush the drill hole twice. For drill hole diameter ≥ 30 mm use a power drill. For deep holes use an extension. Corresponding brushes see **Table B13.1**.
4	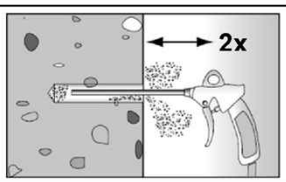	Cleaning the drill hole: Blow out the drill hole twice, with oil-free compressed air (p ≥ 6 bar). 

Go to step 6

Drilling and cleaning the hole (hammer drilling with hollow drill bit)

1		Check a suitable hollow drill (see **Table B1.1**) for correct operation of the dust extraction.
2	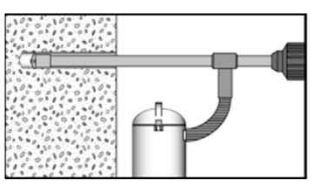	Use a suitable dust extraction system, e. g. fischer FVC 35 M or a comparable dust extraction system with equivalent performance data. Drill the hole with hollow drill bit. The dust extraction system has to extract the drill dust nonstop during the drilling process and must be adjusted to maximum power. Nominal drill hole diameter $\mathbf{d_0}$ and drill hole depth $\mathbf{h_0}$ see **Tables B3.1, B4.1, B8.1, B9.1, B10.1, B11.1, B12.1**.

Go to step 6

Installation instructions part 2

Drilling and cleaning the hole (wet drilling with diamond drill bit)

1	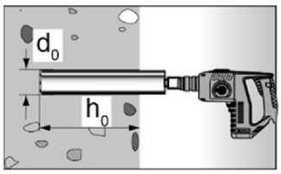	Drill the hole. Drill hole diameter $\mathbf{d_0}$ and nominal drill hole depth $\mathbf{h_0}$ see **Tables B3.1, B4.1, B8.1, B9.1, B10.1, B11.1, B12.1**.	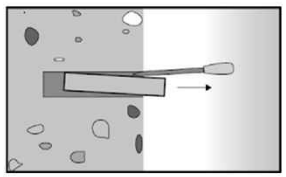	Break the drill core and remove it.
2	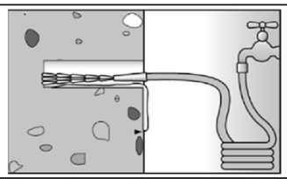	Flush the drill hole with clean water until it flows clear.		
3	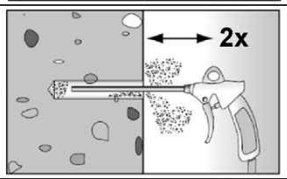	Blow out the drill hole twice, using oil-free compressed air (p > 6 bar).		
4	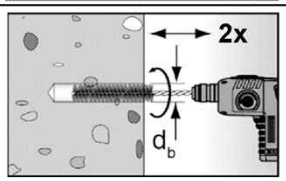	Brush the drill hole twice using a power drill. Corresponding brushes see **Table B13.1**.		
5	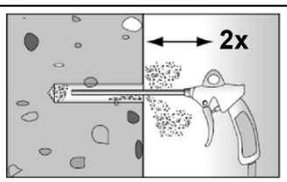	Blow out the drill hole twice, using oil-free compressed air (p > 6 bar).		

Preparing the cartridge

6	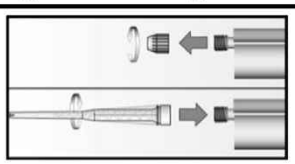	Remove the sealing cap. Screw on the static mixer (the spiral in the static mixer must be clearly visible).		
7	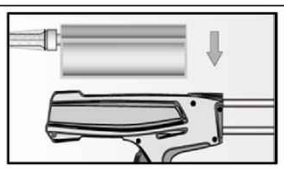		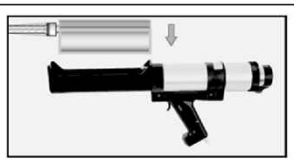	Place the cartridge into the dispenser.
8	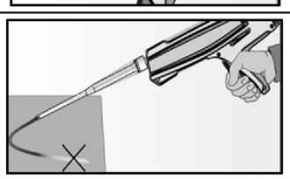		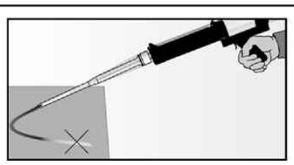	Extrude approximately 10 cm of material out until the resin is evenly grey in colour. Do not use mortar that is not uniformly grey.

Installation instructions part 3

Injection of the mortar

9

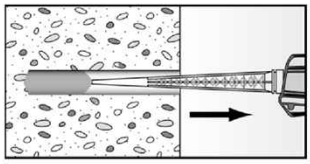

Fill approximately 2/3 of the drill hole with mortar. Always begin from the bottom of the hole and avoid bubbles.

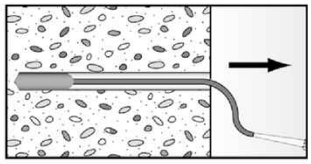

The conditions for mortar injection without extension tube can be found in **Table B13.2**.

For deeper drill holes, than those mentioned in **Table B13.2,** use a suitable extension tube.

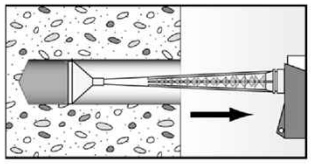

For overhead installation, deep holes (h_0 > 250 mm) or drill hole diameter (d_0 ≥ 30 mm / 1 1/8") use an injection-adapter.

Installation of Anchor rods, Threaded rods or Upat IST

10

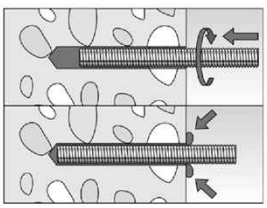

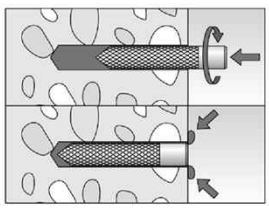

Only use clean and oil-free metal parts.
Mark the setting depth of the metal parts. Push the Anchor rod, Threaded rod or Upat IST down to the bottom of the hole, turning it slightly while doing so.
After inserting the metal part, excess mortar must be emerged around the anchor element. If not, pull out the metal part immediately and reinject mortar.

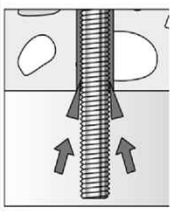

For overhead installations support the metal part with wedges (e.g.centering wedges) or overhead clips.

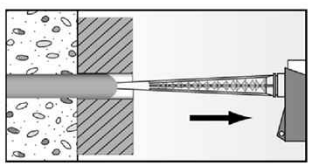

For push through installation fill the annular gap with mortar.

11



Wait for the specified curing time t_{cure} see **Table B13.3**.

12

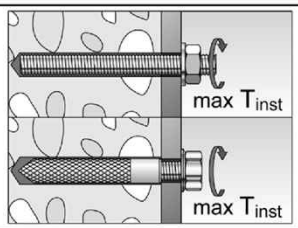

Mounting the fixture max T_{inst} see **Tables B3.1, B4.1, B8.1 and B9.1**.

Option

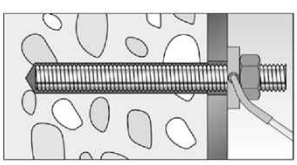

After the minimum curing time is reached, the gap between metal part and fixture (annular clearance) may be filled with mortar via the filling disc.
Compressive strength ≥ 50 N/mm²
(e.g., Upat injection mortars UPM 55, UPM 44 UPM 33).
ATTENTION:
Using filling disc reduces t_{fix} (usable length of the anchor).

Installation instructions part 4

Installation reinforcing bars and Upat FRA

10

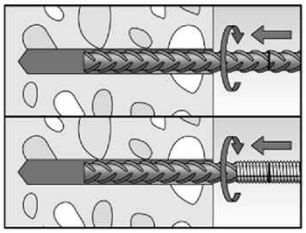

Only use clean and oil-free reinforcing bars or Upat FRA. Mark the setting depth. Turn while using force to push the reinforcement bar or the Upat FRA into the filled hole up to the setting depth mark.

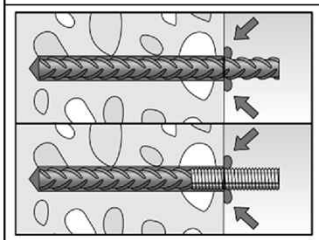

When the setting depth mark is reached, excess mortar must be emerged from the mouth of the drill hole. If not, pull out the anchor element immediately and reinject mortar.

11



Wait for the specified curing time t_{cure} see T**able B13.3**.

12

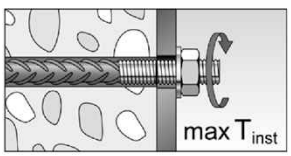

Mounting the fixture max T_{inst} see **Table B12.1**.

Table C1.1: Characteristic resistance to steel failure under tension / shear loading of metric Anchor rods / Threaded rods

Anchor rod / Threaded rod				M8	M10	M12	M14	M16	M20	M22	M24	M27	M30
Characteristic resistance to steel failure under tension loading [1)]													
Characteristic resistance $N_{Rk,s}$	Steel zinc plated	Property class	4.8	14,6(13,2)	23,2(21,4)	33,7	46,0	62,8	98,0	121,2	141,2	183,6	224,4
			5.8	18,3(16,6)	29,0(26,8)	42,1	57,5	78,5	122,5	151,5	176,5	229,5	280,5
			8.8	29,2(26,5)	46,4(42,8)	67,4	92,0	125,6	196,0	242,4	282,4	367,2	448,8
	Stainless steel R and high corrosion resistant steel HCR		50	18,3	29,0	42,1	57,5	78,5	122,5	151,5	176,5	229,5	280,5
			70	25,6	40,6	59,0	80,5	109,9	171,5	212,1	247,1	321,3	392,7
			80	29,2	46,4	67,4	92,0	125,6	196,0	242,4	282,4	367,2	448,8
		[kN]											
Partial factors [2)]													
Partial factor $\gamma_{Ms,N}$	Steel zinc plated	Property class	4.8	1,50									
			5.8	1,50									
			8.8	1,50									
	Stainless steel R and high corrosion resistant steel HCR		50	2,86									
			70	1,87 / Upat HCR: 1,50									
			80	1,60									
		[-]											
Characteristic resistance to steel failure under shear loading [1)]													
without lever arm													
Characteristic resistance $V^0_{Rk,s}$	Steel zinc plated	Property class	4.8	8,7(7,9)	13,9(12,8)	20,2	27,6	37,6	58,8	72,7	84,7	110,1	134,6
			5.8	10,9(9,9)	17,4(16,0)	25,2	34,5	47,1	73,5	90,9	105,9	137,7	168,3
			8.8	14,6(13,2)	23,2(21,4)	33,7	46,0	62,8	98,0	121,2	141,2	183,6	224,4
	Stainless steel R and high corrosion resistant steel HCR		50	9,1	14,5	21,0	28,7	39,2	61,2	75,7	88,2	114,7	140,2
			70	12,8	20,3	29,5	40,2	54,9	85,7	106,0	123,5	160,6	196,3
			80	14,6	23,2	33,7	46,0	62,8	98,0	121,2	141,2	183,6	224,4
		[kN]											
Ductility factor		k_7	[-]	1,0									
with lever arm													
Charact. resistance $M^0_{Rk,s}$	Steel zinc plated	Property class	4.8	14,9(12,9)	29,9(26,5)	52,3	83,5	132,9	259,6	357,1	448,8	665,7	899,5
			5.8	18,7(16,1)	37,3(33,2)	65,4	104,4	166,2	324,6	446,4	561,0	832,2	1124,4
			8.8	29,9(25,9)	59,8(53,1)	104,6	167,0	265,9	519,3	714,2	897,6	1331,5	1799,0
	Stainless steel R and high corrosion resistant steel HCR		50	18,7	37,3	65,4	104,4	166,2	324,6	446,4	561,0	832,2	1124,4
			70	26,2	52,3	91,5	146,1	232,6	454,4	624,9	785,4	1165,0	1574,1
			80	29,9	59,8	104,6	167,0	265,9	519,3	714,2	897,6	1331,5	1799,0
		[Nm]											
Partial factors [2)]													
Partial factor $\gamma_{Ms,V}$	Steel zinc plated	Property class	4.8	1,25									
			5.8	1,25									
			8.8	1,25									
	Stainless steel R and high corrosion resistant steel HCR		50	2,38									
			70	1,56 / Upat HCR: 1,25 [3)]									
			80	1,33									
		[-]											

[1)] Values in brackets are valid for undersized threaded rods with smaller stress area A_s for hot dip galvanised Threaded rods according to EN ISO 10684:2004+AC:2009.

[2)] In absence of other national regulations.

[3)] Only admissible for high corrosion resist. steel HCR, acc. to **Table A6.1**.

Upat Injection system UPM 55

Performance
Characteristic resistance to steel failure under tension / shear loading of metric Anchor rods / Threaded rods

Annex C1
Appendix 27 / 77

Table C2.1: Characteristic resistance to steel failure under tension / shear loading of metric Upat IST

Upat IST				M8	M10	M12	M16	M20
Characteristic resistance to steel failure under tension loading								
Characteristic resistance with Screw or Threaded / Anchor rod $N_{Rk,s}$	Steel zinc plated	Property class of Screw or Threaded / Anchor rod	5.8	[kN]	18,3	29,0	42,1	78,3	122,4
			8.8		29,2	46,4	67,4	106,7	180,2
	Stainless steel R and High corrosion resistant steel HCR		70		25,6	40,6	59,0	109,6	171,3
Partial factors [1]									
Partial factor $\gamma_{Ms,N}$	Steel zinc plated	Property class of Screw or Threaded / Anchor rod	5.8	[-]	1,50				
			8.8		1,50				
	Stainless steel R and High corrosion resistant steel HCR		70		1,87 / Upat HCR: 1,50 [2]				
Characteristic resistance to steel failure under shear loading									
Without lever arm									
Characteristic resistance with Screw or Threaded / Anchor rod $V^0_{Rk,s}$	Steel zinc plated	Property class of Screw or Threaded / Anchor rod	5.8	[kN]	10,9	17,4	25,2	47,1	73,5
			8.8		14,6	23,2	33,7	62,8	98,0
	Stainless steel R and High corrosion resistant steel HCR		70		12,8	20,3	29,5	54,9	85,7
Ductility factor			k_7	[-]	1,0				
With lever arm									
Characteristic resistance with Screw or Threaded / Anchor rod $M^0_{Rk,s}$	Steel zinc plated	Property class of Screw or Threaded / Anchor rod	5.8	[Nm]	18,7	37,3	65,4	166,2	324,6
			8.8		29,9	59,8	104,6	265,9	519,3
	Stainless steel R and High corrosion resistant steel HCR		70		26,2	52,3	91,5	232,6	454,4
Partial factors [1]									
Partial factor $\gamma_{Ms,V}$	Steel zinc plated	Property class of Screw or Threaded / Anchor rod	5.8	[-]	1,25				
			8.8		1,25				
	Stainless steel R and High corrosion resistant steel HCR		70		1,56 / Upat HCR: 1,25 [2]				

[1] In absence of other national regulations.

[2] Only admissible for high corrosion resistant steel HCR, acc. to Table A6.1.

Table C3.1: Characteristic resistance to steel failure under tension / shear loading of metric reinforcing bars

Nominal diameter of the bar		ϕ	8 to 40
Characteristic resistance to steel failure under tension loading			
Characteristic resistance	$N_{Rk,s}$	[kN]	$A_s \cdot f_{uk}$ [1]
Characteristic resistance to steel failure under shear loading			
Without lever arm			
Characteristic resistance	$V^0_{Rk,s}$	[kN]	k_6 [2] $\cdot A_s \cdot f_{uk}$ [1]
Ductility factor	k_7	[-]	1,0
With lever arm			
Characteristic resistance	$M^0_{Rk,s}$	[Nm]	$1,2 \cdot W_{el} \cdot f_{uk}$ [1]

[1] f_{uk} respectively shall be taken from the specifications of the reinforcing bar.
[2] In accordance with EN 1992-4:2018 section 7.2.2.3.1:
k_6 = 0,6 for fasteners made of carbon steel with $f_{uk} \leq 500$ N/mm²,
= 0,5 for fasteners made of carbon steel with 500 N/mm² < $f_{uk} \leq 1000$ N/mm²,
= 0,5 for fasteners made of stainless steel.

Table C3.2: Characteristic restistance to steel failure under tension / shear loading of metric Upat FRA

Upat FRA			M12	M16	M20	M24
Characteristic resistance to steel failure under tension loading						
Characteristic resistance	$N_{Rk,s}$	[kN]	62,0	110,0	173,0	236,5
Partial factor [1]						
Partial factor	$\gamma_{Ms,N}$	[-]	1,40			
Characteristic resistance to steel failure under shear loading						
Without lever arm						
Characteristic resistance	$V^0_{Rk,s}$	[kN]	34,5	64,3	100,4	144,7
Ductility factor	k_7	[-]	1,0			
With lever arm						
Characteristic resistance	$M^0_{Rk,s}$	[Nm]	107,4	273,0	532,2	920,4
Partial factor[1]						
Partial factor	$\gamma_{Ms,V}$	[-]	1,5			

[1] In absence of other national regulations.

Table C4.1: Characteristic resistance for concrete failure under tension / shear loading (metric size)

Size			All sizes		
Tension loading					
Installation factor	γ_{inst}	[-]	See Annex C5 to C16, C40 and C41		
Factors for the compressive strength of concrete > C20/25					
Increasing factor ψ_c for cracked or uncracked concrete $\tau_{Rk(X,Y)} = \psi_c \cdot \tau_{Rk(C20/25)}$	C25/30	Ψ_c	[-]	1,02	
	C30/37			1,04	
	C35/45			1,06	
	C40/50			1,07	
	C45/55			1,08	
	C50/60			1,09	
Splitting failure					
Edge distance	$h / h_{ef} \geq 2,0$	$c_{cr,sp}$	[mm]	$1,0\ h_{ef}$	
	$2,0 > h / h_{ef} > 1,3$			$4,6\ h_{ef} - 1,8\ h$	
	$h / h_{ef} \leq 1,3$			$2,26\ h_{ef}$	
Spacing		$s_{cr,sp}$		$2\ c_{cr,sp}$	
Concrete cone failure					
Uncracked concrete		$k_{ucr,N}$	[-]	11,0	
Cracked concrete		$k_{cr,N}$		7,7	
Edge distance		$c_{cr,N}$	[mm]	$1,5\ h_{ef}$	
Spacing		$s_{cr,N}$		$2\ c_{cr,N}$	
Factors for sustained tension loading					
Temperature range			24 °C / 40 °C	35 °C / 60 °C	50 °C / 72 °C
Factor		ψ^0_{sus}	[-]	0,77	0,60	0,48
Factor		$\psi^0_{sus,100}$	[-]	0,77	0,60	0,71
Shear loading					
Installation factor		γ_{inst}	[-]	1,0	
Concrete pry-out failure					
Factor for pry-out failure		k_8	[-]	2,0	
Concrete edge failure					
Effective length of fastener for shear loading		l_f	[mm]	for $d_{nom} \leq 24$ mm: min (h_{ef}; 12 d_{nom}) for $d_{nom} > 24$ mm: min (h_{ef}; max (8 d_{nom}; 300 mm))	

Effective diameter of the fastener d_{nom}

Size			M8	M10	M12	M14	M16	M20	M22	M24	M27	M30
Anchor rods and Threaded rods	d_{nom}	[mm]	8,0	10,0	12,0	14,0	16,0	20,0	22,0	24,0	27,0	30,0
Upat IST	d_{nom}		12,0	15,7	18,0	-[1]	22,0	28,0	-[1]	-[1]	-[1]	-[1]
Upat FRA	d_{nom}		-[1]	-[1]	12,0	-[1]	16,0	20,0	-[1]	25,0	-[1]	-[1]

Size (nominal diameter of the bar)	ϕ	8	10	12	14	16	18	20	22	24	25	26	28	30	32	34	36	40
Reinforcing bar d_{nom}	[mm]	8	10	12	14	16	18	20	22	24	25	26	28	30	32	34	36	40

[1] Anchor type not part of the assessment.

Upat Injection system UPM 55

Performance
Characteristic resistance for concrete failure under tension / shear loading (metric size)

Annex C4
Appendix 30 / 77

Table C5.1: Characteristic resistance to combined pull-out and concrete failure for metric Anchor rods and Threaded rods in hammer or diamond drilled holes; uncracked or cracked concrete; working life 50 years

Anchor rod / Threaded rod				M8[1]	M10	M12	M14	M16	M20	M22	M24	M27	M30
Combined pull-out and concrete cone failure													
Calculation diameter		d	[mm]	8	10	12	14	16	20	22	24	27	30
Uncracked concrete													
Characteristic bond resistance in uncracked concrete C20/25													
Hammer-drilling with standard drill bit or hollow drill bit (dry or wet concrete)													
Temperature range	I: 24 °C / 40 °C	$\tau_{Rk,ucr}$	[N/mm²]	20,8	19,7	18,8	18,1	17,6	16,7	16,3	16,0	15,5	15,1
	II: 35 °C / 60 °C			18,0	18,0	18,0	17,0	17,0	16,0	15,0	15,0	15,0	14,0
	III: 50 °C / 72 °C			18,0	17,0	17,0	16,0	16,0	15,0	14,0	14,0	14,0	13,0
Hammer-drilling with standard drill bit or hollow drill bit (water filled hole)													
Temperature range	I: 24 °C / 40 °C	$\tau_{Rk,ucr}$	[N/mm²]	20,8	19,7	18,8	17,9	16,9	15,3	14,4	13,8	13,2	12,3
	II: 35 °C / 60 °C			16,0	16,0	15,0	13,0	13,0	11,0	11,0	10,0	10,0	9,0
	III: 50 °C / 72 °C			15,0	14,0	14,0	13,0	12,0	11,0	10,0	10,0	9,0	9,0
Installation factors; Hammer-drilling with standard drill bit or hollow drill bit													
Dry or wet concrete		γ_{inst}	[-]	1,0									
Water filled hole				1,4									
Diamond-drilling (dry or wet concrete)													
Temperature range	I: 24 °C / 40 °C	$\tau_{Rk,ucr}$	[N/mm²]	16,0	15,0	13,5	12,8	12,4	11,6	11,3	10,9	10,5	10,3
	II: 35 °C / 60 °C			16,0	15,0	13,0	12,0	12,0	10,0	10,0	10,0	9,0	9,0
	III: 50 °C / 72 °C			15,0	14,0	12,0	11,0	11,0	10,0	9,0	9,0	8,0	8,0
Diamond-drilling (water filled hole)													
Temperature range	I: 24 °C / 40 °C	$\tau_{Rk,ucr}$	[N/mm²]	16,0	16,8	15,5	14,3	13,6	12,0	11,5	10,9	10,3	9,9
	II: 35 °C / 60 °C			16,0	15,0	13,0	12,0	12,0	10,0	10,0	10,0	9,0	9,0
	III: 50 °C / 72 °C			15,0	14,0	12,0	11,0	11,0	10,0	9,0	9,0	8,0	8,0
Installation factors; Diamond-drilling													
Dry or wet concrete		γ_{inst}	[-]	1,0									
Water filled hole				1,4									
Cracked concrete													
Characteristic bond resistance in cracked concrete C20/25													
Hammer-drilling with standard drill bit or hollow drill bit (dry or wet concrete)													
Temperature range	I: 24 °C / 40 °C	$\tau_{Rk,cr}$	[N/mm²]	7,7	9,0	10,1	9,8	9,5	8,5	8,5	8,5	8,5	8,5
	II: 35 °C / 60 °C			7,7	9,0	10,1	9,8	9,5	8,5	8,5	8,5	8,5	8,5
	III: 50 °C / 72 °C			7,2	8,5	9,5	9,2	8,9	8,5	8,5	8,5	8,5	8,5
Hammer-drilling with standard drill bit or hollow drill bit (water filled hole)													
Temperature range	I: 24 °C / 40 °C	$\tau_{Rk,cr}$	[N/mm²]	6,6	7,7	8,7	8,3	7,7	6,0	6,0	6,0	6,0	6,0
	II: 35 °C / 60 °C			6,6	7,7	8,7	8,3	7,7	6,0	6,0	6,0	6,0	6,0
	III: 50 °C / 72 °C			6,2	7,3	8,1	7,9	7,3	6,0	6,0	6,0	6,0	6,0
Installation factors; Hammer-drilling with standard drill bit or hollow drill bit													
Dry or wet concrete		γ_{inst}	[-]	1,0									
Water filled hole				1,2					1,4				
Diamond-drilling (dry or wet concrete)													
Temperature range	I: 24 °C / 40 °C	$\tau_{Rk,cr}$	[N/mm²]	7,0	7,0	7,0	7,0	6,0	6,0	7,0	7,0	7,0	7,0
	II: 35 °C / 60 °C			7,0	7,0	7,0	7,0	6,0	6,0	7,0	7,0	7,0	7,0
	III: 50 °C / 72 °C			7,0	7,0	7,0	7,0	6,0	6,0	7,0	7,0	7,0	7,0
Diamond-drilling (water filled hole)													
Temperature range	I: 24 °C / 40 °C	$\tau_{Rk,cr}$	[N/mm²]	6,0	7,5	7,5	7,0	6,0	6,0	6,0	6,0	6,0	6,0
	II: 35 °C / 60 °C			6,0	7,5	7,5	7,0	6,0	6,0	6,0	6,0	6,0	6,0
	III: 50 °C / 72 °C			6,0	7,0	7,0	7,0	6,0	6,0	6,0	6,0	6,0	6,0
Installation factors; Diamond-drilling													
Dry or wet concrete		γ_{inst}	[-]	1,0									
Water filled hole				1,2					1,4				

[1] Not allowed for hollow drill bit.

Upat Injection system UPM 55

Performance
Characteristic resistance to combined pull-out and concrete failure for metric Anchor rods and Threaded rods; working life 50 years

Annex C5
Appendix 31 / 77

Table C6.1: Characteristic resistance to combined pull-out and concrete failure for metric Anchor rods and Threaded rods in hammer or diamond drilled holes; uncracked or cracked concrete; working life 100 years

Anchor rod / Threaded rod			M8[1]	M10	M12	M14	M16	M20	M22	M24	M27	M30
Combined pull-out and concrete cone failure												
Calculation diameter	d	[mm]	8	10	12	14	16	20	22	24	27	30
Uncracked concrete												
Characteristic bond resistance in uncracked concrete C20/25												
Hammer-drilling with standard drill bit or hollow drill bit (dry or wet concrete)												
Temperature range I: 24 °C / 40 °C	$\tau_{Rk,100,ucr}$	[N/mm²]	17,1	16,1	15,4	14,9	14,4	13,7	13,4	13,1	12,7	12,4
Temperature range II: 35 °C / 60 °C	$\tau_{Rk,100,ucr}$	[N/mm²]	13,5	13,5	13,5	12,8	12,8	12,0	11,3	11,3	11,3	10,5
Temperature range III: 50 °C / 72 °C	$\tau_{Rk,100,ucr}$	[N/mm²]	9,9	10,2	10,2	10,4	10,4	9,8	9,1	9,1	9,1	8,5
Hammer-drilling with standard drill bit or hollow drill bit (water filled hole)												
Temperature range I: 24 °C / 40 °C	$\tau_{Rk,100,ucr}$	[N/mm²]	17,1	16,2	15,4	14,7	13,9	12,5	11,8	11,3	10,8	10,1
Temperature range II: 35 °C / 60 °C	$\tau_{Rk,100,ucr}$	[N/mm²]	12,0	12,0	11,3	9,8	9,8	8,3	8,3	7,5	7,5	6,8
Temperature range III: 50 °C / 72 °C	$\tau_{Rk,100,ucr}$	[N/mm²]	8,3	8,4	8,4	8,5	7,8	7,2	6,5	6,5	5,9	5,9
Installation factors; Hammer-drilling with standard drill bit or hollow drill bit												
Dry or wet concrete	γ_{inst}	[-]	1,0									
Water filled hole	γ_{inst}	[-]	1,4									
Diamond-drilling (dry or wet concrete)												
Temperature range I: 24 °C / 40 °C	$\tau_{Rk,100,ucr}$	[N/mm²]	12,0	12,3	11,6	11,1	10,5	10,1	9,5	9,3	8,9	8,8
Temperature range II: 35 °C / 60 °C	$\tau_{Rk,100,ucr}$	[N/mm²]	12,0	11,3	9,8	9,0	9,0	7,5	7,5	7,5	6,8	6,8
Temperature range III: 50 °C / 72 °C	$\tau_{Rk,100,ucr}$	[N/mm²]	8,3	8,4	7,2	7,2	7,2	6,5	5,9	5,9	5,2	5,2
Diamond-drilling (water filled hole)												
Temperature range I: 24 °C / 40 °C	$\tau_{Rk,100,ucr}$	[N/mm²]	12,0	13,8	12,7	11,7	11,2	10,0	9,4	8,9	8,4	8,1
Temperature range II: 35 °C / 60 °C	$\tau_{Rk,100,ucr}$	[N/mm²]	12,0	11,3	9,8	9,0	9,0	7,5	7,5	7,5	6,8	6,8
Temperature range III: 50 °C / 72 °C	$\tau_{Rk,100,ucr}$	[N/mm²]	8,3	8,4	7,2	7,2	7,2	6,5	5,9	5,9	5,2	5,2
Installation factors												
Dry or wet concrete	γ_{inst}	[-]	1,0									
Water filled hole	γ_{inst}	[-]	1,4									
Cracked concrete												
Characteristic bond resistance in cracked concrete C20/25												
Hammer-drilling with standard drill bit or hollow drill bit (dry or wet concrete)												
Temperature range I: 24 °C / 40 °C	$\tau_{Rk,100,cr}$	[N/mm²]	5,7	7,0	7,6	7,4	7,2	6,9	6,8	6,7	6,5	6,3
Temperature range II: 35 °C / 60 °C	$\tau_{Rk,100,cr}$	[N/mm²]	5,7	7,0	7,6	7,4	7,2	6,9	6,8	6,7	6,5	6,3
Temperature range III: 50 °C / 72 °C	$\tau_{Rk,100,cr}$	[N/mm²]	5,4	6,6	7,2	7,0	6,8	6,4	6,4	6,3	6,1	6,0
Hammer-drilling with standard drill bit or hollow drill bit (water filled hole)												
Temperature range I: 24 °C / 40 °C	$\tau_{Rk,100,cr}$	[N/mm²]	4,9	6,0	6,5	6,1	5,9	4,9	4,8	4,7	4,6	4,4
Temperature range II: 35 °C / 60 °C	$\tau_{Rk,100,cr}$	[N/mm²]	4,9	6,0	6,5	6,1	5,9	4,9	4,8	4,7	4,6	4,4
Temperature range III: 50 °C / 72 °C	$\tau_{Rk,100,cr}$	[N/mm²]	4,6	5,7	6,1	5,7	5,5	4,5	4,5	4,4	4,3	4,3
Installation factors; Hammer-drilling with standard drill bit or hollow drill bit												
Dry or wet concrete	γ_{inst}	[-]	1,0									
Water filled hole	γ_{inst}	[-]	1,2					1,4				
Diamond-drilling (dry or wet concrete)												
Temperature range I: 24 °C / 40 °C	$\tau_{Rk,100,cr}$	[N/mm²]	4,2	6,0	5,6	4,6	3,9	3,9	4,6	4,6	4,6	4,6
Temperature range II: 35 °C / 60 °C	$\tau_{Rk,100,cr}$	[N/mm²]	4,2	6,0	5,6	4,6	3,9	3,9	4,6	4,6	4,6	4,6
Temperature range III: 50 °C / 72 °C	$\tau_{Rk,100,cr}$	[N/mm²]	4,2	6,0	5,6	4,6	3,9	3,9	4,6	4,6	4,6	4,6
Installation factors												
Dry or wet concrete	γ_{inst}	[-]	1,0									

[1] Not allowed for hollow drill bit.

Upat Injection system UPM 55

Performance
Characteristic resistance to combined pull-out and concrete failure for Anchor rods and Threaded rods in hammer or diamond drilled holes; working life 100 years

Annex C6
Appendix 32 / 77

Table C7.1: Characteristic resistance to combined pull-out and concrete failure for metric Upat IST in hammer or diamond drilled holes; uncracked or cracked concrete; working life 50 years

Upat IST				M8	M10	M12	M16	M20
Combined pull-out and concrete cone failure								
Calculation diameter		d	[mm]	12	15,7	18	22	28
Uncracked concrete								
Characteristic bond resistance in uncracked concrete C20/25								
Hammer-drilling with standard drill bit or hollow drill bit (dry or wet concrete)								
Temperature range	I: 24 °C / 40 °C	$\tau_{Rk,ucr}$	[N/mm²]	18,8	17,6	17,0	16,2	15,3
	II: 35 °C / 60 °C			15,0	14,0	14,0	13,0	12,0
	III: 50 °C / 72 °C			14,0	13,0	13,0	12,0	11,0
Hammer-drilling with standard drill bit or hollow drill bit (water filled hole)								
Temperature range	I: 24 °C / 40 °C	$\tau_{Rk,ucr}$	[N/mm²]	18,8	16,9	15,8	14,3	12,8
	II: 35 °C / 60 °C			14,0	12,0	12,0	11,0	10,0
	III: 50 °C / 72 °C			13,0	12,0	11,0	10,0	9,0
Installation factors; Hammer-drilling with standard drill bit or hollow drill bit								
Dry or wet concrete		γ_{inst}	[-]	1,0				
Water filled hole				1,4				
Diamond-drilling (dry or wet concrete)								
Temperature range	I: 24 °C / 40 °C	$\tau_{Rk,ucr}$	[N/mm²]	13,3	12,3	11,9	11,2	10,4
	II: 35 °C / 60 °C			13,0	12,0	11,0	10,0	9,0
	III: 50 °C / 72 °C			12,0	11,0	10,0	9,0	8,0
Diamond-drilling (water filled hole)								
Temperature range	I: 24 °C / 40 °C	$\tau_{Rk,ucr}$	[N/mm²]	15,1	13,6	12,6	11,4	10,2
	II: 35 °C / 60 °C			13,0	12,0	11,0	10,0	9,0
	III: 50 °C / 72 °C			12,0	11,0	10,0	9,0	8,0
Installation factors; Diamond-drilling								
Dry or wet concrete		γ_{inst}	[-]	1,0				
Water filled hole				1,4				
Cracked concrete								
Characteristic bond resistance in cracked concrete C20/25								
Hammer-drilling with standard drill bit or hollow drill bit (dry or wet concrete)								
Temperature range	I: 24 °C / 40 °C	$\tau_{Rk,cr}$	[N/mm²]	7,0	6,0	6,0	7,0	7,0
	II: 35 °C / 60 °C			7,0	6,0	6,0	7,0	7,0
	III: 50 °C / 72 °C			7,0	6,0	6,0	7,0	7,0
Hammer-drilling with standard drill bit or hollow drill bit (water filled hole)								
Temperature range	I: 24 °C / 40 °C	$\tau_{Rk,cr}$	[N/mm²]	7,0	6,5	6,0	6,0	6,0
	II: 35 °C / 60 °C			7,0	6,5	6,0	6,0	6,0
	III: 50 °C / 72 °C			7,0	6,0	6,0	6,0	6,0
Installation factors; Hammer-drilling with standard drill bit or hollow drill bit								
Dry or wet concrete		γ_{inst}	[-]	1,0				
Water filled hole				1,2			1,4	
Diamond-drilling (dry or wet concrete)								
Temperature range	I: 24 °C / 40 °C	$\tau_{Rk,cr}$	[N/mm²]	7,0	6,0	6,0	7,0	7,0
	II: 35 °C / 60 °C			7,0	6,0	6,0	7,0	7,0
	III: 50 °C / 72 °C			7,0	6,0	6,0	7,0	7,0
Diamond-drilling (water filled hole)								
Temperature range	I: 24 °C / 40 °C	$\tau_{Rk,cr}$	[N/mm²]	7,0	6,5	6,0	6,0	6,0
	II: 35 °C / 60 °C			7,0	6,5	6,0	6,0	6,0
	III: 50 °C / 72 °C			7,0	6,0	6,0	6,0	6,0
Installation factors; Diamond-drilling								
Dry or wet concrete		γ_{inst}	[-]	1,0				
Water filled hole				1,2			1,4	

Upat Injection system UPM 55

Performance
Characteristic resistance to combined pull-out and concrete failure for Upat IST; working life 50 years

Annex C7
Appendix 33 / 77

Table C8.1: Characteristic resistance to combined pull-out and concrete failure for metric Upat IST in hammer or diamond drilled holes; uncracked or cracked concrete; working life 100 years

Upat IST				M8	M10	M12	M16	M20
Combined pull-out and concrete cone failure								
Calculation diameter		d	[mm]	12	15,7	18	22	28
Uncracked concrete								
Characteristic bond resistance in uncracked concrete C20/25								
Hammer-drilling with standard drill bit or hollow drill bit (dry or wet concrete)								
Temperature range	I: 24 °C / 40 °C	$\tau_{Rk,100,ucr}$	[N/mm²]	15,4	14,4	14,0	13,3	12,6
	II: 35 °C / 60 °C			11,3	10,5	10,5	9,8	9,0
	III: 50 °C / 72 °C			7,7	7,8	7,8	7,8	7,2
Hammer-drilling with standard drill bit or hollow drill bit (water filled hole)								
Temperature range	I: 24 °C / 40 °C	$\tau_{Rk,100,ucr}$	[N/mm²]	15,4	13,9	13,0	11,7	10,5
	II: 35 °C / 60 °C			10,5	9,0	9,0	8,3	7,5
	III: 50 °C / 72 °C			7,2	7,2	6,6	6,5	5,9
Installation factors; Hammer-drilling with standard drill bit or hollow drill bit								
Dry or wet concrete		γ_{inst}	[-]	1,0				
Water filled hole				1,4				
Diamond-drilling (dry or wet concrete)								
Temperature range	I: 24 °C / 40 °C	$\tau_{Rk,100,ucr}$	[N/mm²]	10,9	10,1	9,8	9,2	8,6
	II: 35 °C / 60 °C			9,8	9,0	8,3	7,5	6,8
	III: 50 °C / 72 °C			6,6	6,6	6,0	5,9	5,2
Diamond-drilling (water filled hole)								
Temperature range	I: 24 °C / 40 °C	$\tau_{Rk,100,ucr}$	[N/mm²]	12,5	11,2	10,3	9,3	8,4
	II: 35 °C / 60 °C			9,8	9,0	8,3	7,5	6,8
	III: 50 °C / 72 °C			6,6	6,6	6,0	5,9	5,2
Installation factors; Diamond-drilling								
Dry or wet concrete		γ_{inst}	[-]	1,0				
Water filled hole				1,4				
Cracked concrete								
Characteristic bond resistance in cracked concrete C20/25								
Hammer-drilling with standard drill bit or hollow drill bit (dry or wet concrete)								
Temperature range	I: 24 °C / 40 °C	$\tau_{Rk,100,cr}$	[N/mm²]	4,2	5,1	4,8	4,6	4,6
	II: 35 °C / 60 °C			4,2	5,1	4,8	4,6	4,6
	III: 50 °C / 72 °C			4,2	5,1	4,8	4,6	4,6
Hammer-drilling with standard drill bit or hollow drill bit (water filled hole)								
Temperature range	I: 24 °C / 40 °C	$\tau_{Rk,100,cr}$	[N/mm²]	4,2	5,5	4,8	3,9	3,9
	II: 35 °C / 60 °C			4,2	5,5	4,8	3,9	3,9
	III: 50 °C / 72 °C			4,2	5,1	4,8	3,9	3,9
Installation factors; Hammer-drilling with standard drill bit or hollow drill bit								
Dry or wet concrete		γ_{inst}	[-]	1,0				
Water filled hole				1,2			1,4	
Diamond-drilling (dry or wet concrete)								
Temperature range	I: 24 °C / 40 °C	$\tau_{Rk,100,cr}$	[N/mm²]	4,2	5,1	4,8	4,6	4,6
	II: 35 °C / 60 °C			4,2	5,1	4,8	4,6	4,6
	III: 50 °C / 72 °C			4,2	5,1	4,8	4,6	4,6
Installation factors; Diamond-drilling								
Dry or wet concrete		γ_{inst}	[-]	1,0				

Upat Injection system UPM 55

Performance
Characteristic resistance to combined pull-out and concrete failure for Upat IST; working life 100 years

Annex C8
Appendix 34 / 77

Table C9.1: Characteristic resistance to combined pull-out and concrete failure for metric reinforcing bars in hammer or diamond drilled holes; uncracked concrete; working life 50 years

Nominal diameter of the bar		ϕ		8[1]	10	12	14	16	18	20	22	24
Combined pull-out and concrete cone failure												
Calculation diameter		d	[mm]	8	10	12	14	16	18	20	22	24
Uncracked concrete												
Characteristic bond resistance in uncracked concrete C20/25												
Hammer-drilling with standard drill bit or hollow drill bit (dry or wet concrete)												
Temperature range	I: 24 °C / 40 °C	$\tau_{Rk,ucr}$	[N/mm²]	16,0	16,8	16,1	15,5	15,0	14,6	14,2	14,0	13,6
	II: 35 °C / 60 °C			16,0	15,0	15,0	14,0	14,0	13,0	13,0	13,0	12,0
	III: 50 °C / 72 °C			15,0	14,0	14,0	13,0	13,0	12,0	12,0	12,0	12,0
Hammer-drilling with standard drill bit or hollow drill bit (water filled hole)												
Temperature range	I: 24 °C / 40 °C	$\tau_{Rk,ucr}$	[N/mm²]	16,0	16,8	16,1	14,9	14,4	13,4	13,0	12,1	11,8
	II: 35 °C / 60 °C			16,0	16,0	14,0	13,0	12,0	12,0	11,0	11,0	10,0
	III: 50 °C / 72 °C			15,0	14,0	13,0	12,0	12,0	11,0	11,0	10,0	10,0
Installation factors; Hammer-drilling with standard drill bit or hollow drill bit												
Dry or wet concrete		γ_{inst}	[-]	1,0								
Water filled hole				1,4								
Diamond-drilling (dry or wet concrete as well as water filled hole)												
Temperature range	I: 24 °C / 40 °C	$\tau_{Rk,ucr}$	[N/mm²]	16,0	15,0	13,0	12,0	12,0	11,0	10,0	10,0	10,0
	II: 35 °C / 60 °C			16,0	15,0	13,0	12,0	12,0	11,0	10,0	10,0	10,0
	III: 50 °C / 72 °C			15,0	14,0	12,0	11,0	11,0	10,0	10,0	9,0	9,0
Installation factors; Diamond-drilling												
Dry or wet concrete		γ_{inst}	[-]	1,0								
Water filled hole				1,4								

Nominal diameter of the bar		ϕ		25	26	28	30[1]	32[1]	34[1]	36[1]	40[1]
Combined pull-out and concrete cone failure											
Calculation diameter		d	[mm]	25	26	28	30	32	34	36	40
Uncracked concrete											
Characteristic bond resistance in uncracked concrete C20/25											
Hammer-drilling with standard drill bit or hollow drill bit (dry or wet concrete)											
Temperature range	I: 24 °C / 40 °C	$\tau_{Rk,ucr}$	[N/mm²]	13,5	13,3	13,1	12,9	12,7	12,5	12,4	12,1
	II: 35 °C / 60 °C			12,0	12,0	12,0	12,0	12,0	11,0	11,0	11,0
	III: 50 °C / 72 °C			11,0	11,0	11,0	11,0	11,0	11,0	10,0	10,0
Hammer-drilling with standard drill bit or hollow drill bit (water filled hole)											
Temperature range	I: 24 °C / 40 °C	$\tau_{Rk,ucr}$	[N/mm²]	11,5	11,4	10,6	10,5	10,3	9,0	8,0	8,0
	II: 35 °C / 60 °C			10,0	10,0	10,0	9,0	9,0	9,0	8,0	8,0
	III: 50 °C / 72 °C			9,0	9,0	9,0	9,0	8,0	8,0	8,0	8,0
Installation factors; Hammer-drilling with standard drill bit or hollow drill bit											
Dry or wet concrete		γ_{inst}	[-]	1,0							
Water filled hole				1,4							
Diamond-drilling (dry or wet concrete as well as water filled hole)											
Temperature range	I: 24 °C / 40 °C	$\tau_{Rk,ucr}$	[N/mm²]	9,0	9,0	9,0	9,0	8,0	8,0	8,0	7,0
	II: 35 °C / 60 °C			9,0	9,0	9,0	9,0	8,0	8,0	8,0	7,0
	III: 50 °C / 72 °C			9,0	8,0	8,0	8,0	8,0	7,0	7,0	7,0
Installation factors; Diamond-drilling											
Dry or wet concrete		γ_{inst}	[-]	1,0							
Water filled hole				1,4							

[1] Not allowed for hollow drill bit.

Upat Injection system UPM 55

Performance
Characteristic resistance to combined pull-out and concrete failure for reinforcing bars; working life 50 years

Annex C9
Appendix 35 / 77

Table C10.1: Characteristic resistance to combined pull-out and concrete failure for metric reinforcing bars in hammer or diamond drilled holes; cracked concrete; working life 50 years part 1

Nominal diameter of the bar		**ϕ**	**8[1)]**	**10**	**12**	**14**	**16**	**18**	**20**	**22**	**24**
Combined pull-out and concrete cone failure											
Calculation diameter		d [mm]	8	10	12	14	16	18	20	22	24
Cracked concrete											
Characteristic bond resistance in cracked concrete C20/25											
Hammer-drilling with standard drill bit or hollow drill bit (dry or wet concrete)											
Temperature range	I: 24 °C / 40 °C	$\tau_{Rk,cr}$ [N/mm²]	7,0	7,0	8,0	8,0	8,0	8,0	8,0	8,0	8,0
	II: 35 °C / 60 °C		7,0	7,0	8,0	8,0	8,0	8,0	8,0	8,0	8,0
	III: 50 °C / 72 °C		7,0	7,0	8,0	8,0	8,0	8,0	8,0	8,0	8,0
Hammer-drilling with standard drill bit or hollow drill bit (water filled hole)											
Temperature range	I: 24 °C / 40 °C	$\tau_{Rk,cr}$ [N/mm²]	6,0	7,5	6,5	6,5	6,5	6,0	6,0	6,0	6,0
	II: 35 °C / 60 °C		6,0	7,5	6,5	6,5	6,5	6,0	6,0	6,0	6,0
	III: 50 °C / 72 °C		6,0	6,5	6,5	6,0	6,0	6,0	6,0	6,0	6,0
Installation factors; Hammer-drilling with standard drill bit or hollow drill bit											
Dry or wet concrete		γ_{inst} [-]	1,0								
Water filled hole			1,2						1,4		
Diamond-drilling (dry or wet concrete)											
Temperature range	I: 24 °C / 40 °C	$\tau_{Rk,cr}$ [N/mm²]	7,0	7,0	7,0	7,0	6,0	6,0	6,0	7,0	7,0
	II: 35 °C / 60 °C		7,0	7,0	7,0	7,0	6,0	6,0	6,0	7,0	7,0
	III: 50 °C / 72 °C		7,0	7,0	7,0	7,0	6,0	6,0	6,0	7,0	7,0
Diamond-drilling (water filled hole)											
Temperature range	I: 24 °C / 40 °C	$\tau_{Rk,cr}$ [N/mm²]	6,0	7,5	6,5	6,5	6,5	6,0	6,0	6,0	6,0
	II: 35 °C / 60 °C		6,0	7,5	6,5	6,5	6,5	6,0	6,0	6,0	6,0
	III: 50 °C / 72 °C		6,0	6,5	6,5	6,0	6,0	6,0	6,0	6,0	6,0
Installation factors; Diamond-drilling											
Dry or wet concrete		γ_{inst} [-]	1,0								
Water filled hole			1,2						1,4		

[1)] Not allowed for hollow drill bit.

Table C11.1: Characteristic resistance to combined pull-out and concrete failure for metric reinforcing bars in hammer or diamond drilled holes; cracked concrete; working life 50 years part 2

Nominal diameter of the bar		**ϕ**		**25**	**26**	**28**	**30[1)]**	**32[1)]**	**34[1)]**	**36[1)]**	**40[1)]**
Combined pull-out and concrete cone failure											
Calculation diameter		d	[mm]	25	26	28	30	32	34	36	40
Cracked concrete											
Characteristic bond resistance in cracked concrete C20/25											
Hammer-drilling with standard drill bit or hollow drill bit (dry or wet concrete)											
Temperature range	I: 24 °C / 40 °C	$\tau_{Rk,cr}$	[N/mm²]	8,0	8,0	8,0	8,0	8,0	8,0	8,0	8,0
	II: 35 °C / 60 °C			8,0	8,0	8,0	8,0	8,0	8,0	8,0	8,0
	III: 50 °C / 72 °C			8,0	8,0	8,0	8,0	8,0	8,0	8,0	8,0
Hammer-drilling with standard drill bit or hollow drill bit (water filled hole)											
Temperature range	I: 24 °C / 40 °C	$\tau_{Rk,cr}$	[N/mm²]	6,0	6,0	6,0	6,0	5,0	5,0	5,0	5,0
	II: 35 °C / 60 °C			6,0	6,0	6,0	6,0	5,0	5,0	5,0	5,0
	III: 50 °C / 72 °C			6,0	6,0	6,0	6,0	5,0	5,0	5,0	5,0
Installation factors; Hammer-drilling with standard drill bit or hollow drill bit											
Dry or wet concrete		γ_{inst}	[-]	1,0							
Water filled hole				1,4							
Diamond-drilling (dry or wet concrete)											
Temperature range	I: 24 °C / 40 °C	$\tau_{Rk,cr}$	[N/mm²]	7,0	7,0	7,0	7,0	5,0	5,0	5,0	5,0
	II: 35 °C / 60 °C			7,0	7,0	7,0	7,0	5,0	5,0	5,0	5,0
	III: 50 °C / 72 °C			7,0	7,0	7,0	7,0	5,0	5,0	5,0	5,0
Diamond-drilling (water filled hole)											
Temperature range	I: 24 °C / 40 °C	$\tau_{Rk,cr}$	[N/mm²]	6,0	6,0	6,0	6,0	5,0	5,0	5,0	5,0
	II: 35 °C / 60 °C			6,0	6,0	6,0	6,0	5,0	5,0	5,0	5,0
	III: 50 °C / 72 °C			6,0	6,0	6,0	6,0	5,0	5,0	5,0	5,0
Installation factors; Diamond-drilling											
Dry or wet concrete		γ_{inst}	[-]	1,0							
Water filled hole				1,4							

[1)] Not allowed for hollow drill bit.

Table C12.1: Characteristic resistance to combined pull-out and concrete failure for metric reinforcing bars in hammer or diamond drilled holes; uncracked concrete; working life 100 years

Nominal diameter of the bar		ϕ	8[1]	10	12	14	16	18	20	22	24
Combined pull-out and concrete cone failure											
Calculation diameter	d	[mm]	8	10	12	14	16	18	20	22	24
Uncracked concrete											
Characteristic bond resistance in uncracked concrete C20/25											
Hammer-drilling with standard drill bit or hollow drill bit (dry or wet concrete)											
Temperature range I: 24 °C / 40 °C	$\tau_{Rk,100,ucr}$	[N/mm²]	12,0	13,8	13,2	12,7	12,3	12,0	11,6	11,5	11,2
Temperature range II: 35 °C / 60 °C	$\tau_{Rk,100,ucr}$	[N/mm²]	12,0	11,3	11,3	10,5	10,5	9,8	9,8	9,8	9,0
Temperature range III: 50 °C / 72 °C	$\tau_{Rk,100,ucr}$	[N/mm²]	8,3	8,4	8,4	8,5	8,5	7,8	7,8	7,8	7,8
Hammer-drilling with standard drill bit or hollow drill bit (water filled hole)											
Temperature range I: 24 °C / 40 °C	$\tau_{Rk,100,ucr}$	[N/mm²]	12,0	13,8	13,2	12,2	11,8	11,0	10,7	9,9	9,7
Temperature range II: 35 °C / 60 °C	$\tau_{Rk,100,ucr}$	[N/mm²]	12,0	12,0	10,5	9,8	9,0	9,0	8,3	8,3	7,5
Temperature range III: 50 °C / 72 °C	$\tau_{Rk,100,ucr}$	[N/mm²]	8,3	8,4	7,8	7,8	7,8	7,2	7,2	6,5	6,5
Installation factors; Hammer-drilling with standard drill bit or hollow drill bit											
Dry or wet concrete	γ_{inst}	[-]	1,0								
Water filled hole	γ_{inst}	[-]	1,4								
Diamond-drilling (dry or wet concrete as well as water filled hole)											
Temperature range I: 24 °C / 40 °C	$\tau_{Rk,100,ucr}$	[N/mm²]	12,0	11,3	9,8	9,0	9,0	8,3	7,5	7,5	7,5
Temperature range II: 35 °C / 60 °C	$\tau_{Rk,100,ucr}$	[N/mm²]	12,0	11,3	9,8	9,0	9,0	8,3	7,5	7,5	7,5
Temperature range III: 50 °C / 72 °C	$\tau_{Rk,100,ucr}$	[N/mm²]	8,3	8,4	7,2	7,2	7,2	6,5	6,5	5,9	5,9
Installation factors; Diamond-drilling											
Dry or wet concrete	γ_{inst}	[-]	1,0								
Water filled hole	γ_{inst}	[-]	1,4								

Nominal diameter of the bar		ϕ	25	26	28	30[1]	32[1]	34[1]	36[1]	40[1]
Combined pull-out and concrete cone failure										
Calculation diameter	d	[mm]	25	26	28	30	32	34	36	40
Uncracked concrete										
Characteristic bond resistance in uncracked concrete C20/25										
Hammer-drilling with standard drill bit or hollow drill bit (dry or wet concrete)										
Temperature range I: 24 °C / 40 °C	$\tau_{Rk,100,ucr}$	[N/mm²]	11,1	10,9	10,8	10,6	10,5	10,3	10,1	9,9
Temperature range II: 35 °C / 60 °C	$\tau_{Rk,100,ucr}$	[N/mm²]	9,0	9,0	9,0	9,0	9,0	8,3	8,3	8,3
Temperature range III: 50 °C / 72 °C	$\tau_{Rk,100,ucr}$	[N/mm²]	7,2	7,2	7,2	7,2	7,2	7,2	6,5	6,5
Hammer-drilling with standard drill bit or hollow drill bit (water filled hole)										
Temperature range I: 24 °C / 40 °C	$\tau_{Rk,100,ucr}$	[N/mm²]	9,4	9,3	8,7	8,6	8,5	6,8	6,0	6,0
Temperature range II: 35 °C / 60 °C	$\tau_{Rk,100,ucr}$	[N/mm²]	7,5	7,5	7,5	6,8	6,8	6,8	6,0	6,0
Temperature range III: 50 °C / 72 °C	$\tau_{Rk,100,ucr}$	[N/mm²]	5,9	5,9	5,9	5,9	5,2	5,2	5,2	5,2
Installation factors; Hammer-drilling with standard drill bit or hollow drill bit										
Dry or wet concrete	γ_{inst}	[-]	1,0							
Water filled hole	γ_{inst}	[-]	1,4							
Diamond-drilling (dry or wet concrete as well as water filled hole)										
Temperature range I: 24 °C / 40 °C	$\tau_{Rk,100,ucr}$	[N/mm²]	6,8	6,8	6,8	6,8	6,0	6,0	6,0	5,3
Temperature range II: 35 °C / 60 °C	$\tau_{Rk,100,ucr}$	[N/mm²]	6,8	6,8	6,8	6,8	6,0	6,0	6,0	5,3
Temperature range III: 50 °C / 72 °C	$\tau_{Rk,100,ucr}$	[N/mm²]	5,9	5,2	5,2	5,2	5,2	4,6	4,6	4,6
Installation factors; Diamond-drilling										
Dry or wet concrete	γ_{inst}	[-]	1,0							
Water filled hole	γ_{inst}	[-]	1,4							

[1] Not allowed for hollow drill bit.

Upat Injection system UPM 55

Performance
Characteristic resistance to combined pull-out and concrete failure for reinforcing bars; working life 100 years

Annex C12
Appendix 38 / 77

Table C13.1: Characteristic resistance to combined pull-out and concrete failure for metric reinforcing bars in hammer or diamond drilled holes; cracked concrete; working life 100 years

Nominal diameter of the bar		ϕ		8[1]	10	12	14	16	18	20	22	24
Combined pull-out and concrete cone failure												
Calculation diameter		d	[mm]	8	10	12	14	16	18	20	22	24
Cracked concrete												
Characteristic bond resistance in cracked concrete C20/25												
Hammer-drilling with standard drill bit or hollow drill bit (dry or wet concrete)												
Temperature range	I: 24 °C / 40 °C	$\tau_{Rk,100,cr}$	[N/mm²]	4,2	6,0	6,4	5,2	5,2	5,2	5,2	5,2	5,2
	II: 35 °C / 60 °C			4,2	6,0	6,4	5,2	5,2	5,2	5,2	5,2	5,2
	III: 50 °C / 72 °C			4,2	6,0	6,4	5,2	5,2	5,2	5,2	5,2	5,2
Hammer-drilling with standard drill bit or hollow drill bit (water filled hole)												
Temperature range	I: 24 °C / 40 °C	$\tau_{Rk,100,cr}$	[N/mm²]	3,6	6,4	5,2	4,2	4,2	3,9	3,9	3,9	3,9
	II: 35 °C / 60 °C			3,6	6,4	5,2	4,2	4,2	3,9	3,9	3,9	3,9
	III: 50 °C / 72 °C			3,6	5,5	5,2	3,9	3,9	3,9	3,9	3,9	3,9
Installation factors; Hammer-drilling with standard drill bit or hollow drill bit												
Dry or wet concrete		γ_{inst}	[-]	1,0								
Water filled hole				1,2						1,4		
Diamond-drilling (dry or wet concrete)												
Temperature range	I: 24 °C / 40 °C	$\tau_{Rk,100,cr}$	[N/mm²]	4,2	6,0	5,6	4,6	3,9	3,9	3,9	4,6	4,6
	II: 35 °C / 60 °C			4,2	6,0	5,6	4,6	3,9	3,9	3,9	4,6	4,6
	III: 50 °C / 72 °C			4,2	6,0	5,6	4,6	3,9	3,9	3,9	4,6	4,6
Installation factor; Diamond-drilling												
Dry or wet concrete		γ_{inst}	[-]	1,0								

Nominal diameter of the bar		ϕ		25	26	28	30[1]	32[1]	34[1]	36[1]	40[1]
Combined pull-out and concrete cone failure											
Calculation diameter		d	[mm]	25	26	28	30	32	34	36	40
Cracked concrete											
Characteristic bond resistance in cracked concrete C20/25											
Hammer-drilling with standard drill bit or hollow drill bit (dry or wet concrete)											
Temperature range	I: 24 °C / 40 °C	$\tau_{Rk,100,cr}$	[N/mm²]	5,2	5,2	5,2	5,2	5,2	5,2	5,2	5,2
	II: 35 °C / 60 °C			5,2	5,2	5,2	5,2	5,2	5,2	5,2	5,2
	III: 50 °C / 72 °C			5,2	5,2	5,2	5,2	5,2	5,2	5,2	5,2
Hammer-drilling with standard drill bit or hollow drill bit (water filled hole)											
Temperature range	I: 24 °C / 40 °C	$\tau_{Rk,100,cr}$	[N/mm²]	3,9	3,9	3,9	3,9	3,3	3,8	3,8	3,8
	II: 35 °C / 60 °C			3,9	3,9	3,9	3,9	3,3	3,8	3,8	3,8
	III: 50 °C / 72 °C			3,9	3,9	3,9	3,9	3,3	3,3	3,3	3,3
Installation factors; Hammer-drilling with standard drill bit or hollow drill bit											
Dry or wet concrete		γ_{inst}	[-]	1,0							
Water filled hole				1,4							
Diamond-drilling (dry or wet concrete)											
Temperature range	I: 24 °C / 40 °C	$\tau_{Rk,100,cr}$	[N/mm²]	4,6	4,6	4,6	4,6	3,3	3,3	3,3	3,3
	II: 35 °C / 60 °C			4,6	4,6	4,6	4,6	3,3	3,3	3,3	3,3
	III: 50 °C / 72 °C			4,6	4,6	4,6	4,6	3,3	3,3	3,3	3,3
Installation factor; Diamond-drilling											
Dry or wet concrete		γ_{inst}	[-]	1,0							

[1] Not allowed for hollow drill bit.

Upat Injection system UPM 55

Performance
Characteristic resistance for combined pull-out and concrete failure for reinforcing bars; working life 100 years

Annex C13
Appendix 39 / 77

Table C14.1: Characteristic resistance to combined pull-out and concrete failure for metric Upat FRA in hammer or diamond drilled holes; uncracked concrete; working life 50 years

Upat FRA				M12	M16	M20	M24
Combined pull-out and concrete cone failure							
Calculation diameter		d	[mm]	12	16	20	25
Uncracked concrete							
Characteristic bond resistance in uncracked concrete C20/25							
Hammer-drilling with standard drill bit or hollow drill bit (dry or wet concrete)							
Temperature range	I: 24 °C / 40 °C	$\tau_{Rk,ucr}$	[N/mm²]	16,1	15,0	14,2	13,5
	II: 35 °C / 60 °C			15,0	14,0	13,0	12,0
	III: 50 °C / 72 °C			14,0	13,0	12,0	11,0
Hammer-drilling with standard drill bit or hollow drill bit (water filled hole)							
Temperature range	I: 24 °C / 40 °C	$\tau_{Rk,ucr}$	[N/mm²]	16,1	14,4	13,0	11,5
	II: 35 °C / 60 °C			14,0	12,0	11,0	10,0
	III: 50 °C / 72 °C			13,0	12,0	11,0	9,0
Installation factors; Hammer-drilling with standard drill bit or hollow drill bit							
Dry or wet concrete		γ_{inst}	[-]	1,0			
Water filled hole				1,4			
Diamond-drilling (dry or wet concrete as well as water filled hole)							
Temperature range	I: 24 °C / 40 °C	$\tau_{Rk,ucr}$	[N/mm²]	13,0	12,0	10,0	9,0
	II: 35 °C / 60 °C			13,0	12,0	10,0	9,0
	III: 50 °C / 72 °C			12,0	11,0	10,0	9,0
Installation factors; Diamond-drilling							
Dry or wet concrete		γ_{inst}	[-]	1,0			
Water filled hole				1,4			

Table C15.1: Characteristic resistance to combined pull-out and concrete failure for metric Upat FRA in hammer or diamond drilled holes; cracked concrete; working life 50 years

Upat FRA				M12	M16	M20	M24
Combined pull-out and concrete cone failure							
Calculation diameter		d	[mm]	12	16	20	25
Cracked concrete							
Characteristic bond resistance in cracked concrete C20/25							
Hammer-drilling with standard drill bit or hollow drill bit (dry or wet concrete)							
Temperature range	I: 24 °C / 40 °C	$\tau_{Rk,cr}$	[N/mm²]	8,0	8,0	8,0	8,0
	II: 35 °C / 60 °C			8,0	8,0	8,0	8,0
	III: 50 °C / 72 °C			8,0	8,0	8,0	8,0
Hammer-drilling with standard drill bit or hollow drill bit (water filled hole)							
Temperature range	I: 24 °C / 40 °C	$\tau_{Rk,cr}$	[N/mm²]	6,5	6,5	6,0	6,0
	II: 35 °C / 60 °C			6,5	6,5	6,0	6,0
	III: 50 °C / 72 °C			6,5	6,0	6,0	6,0
Installation factors; Hammer-drilling with standard drill bit or hollow drill bit							
Dry or wet concrete		γ_{inst}	[-]	1,0			
Water filled hole				1,2		1,4	
Diamond-drilling (dry or wet concrete)							
Temperature range	I: 24 °C / 40 °C	$\tau_{Rk,cr}$	[N/mm²]	7,0	6,0	6,0	7,0
	II: 35 °C / 60 °C			7,0	6,0	6,0	7,0
	III: 50 °C / 72 °C			7,0	6,0	6,0	7,0
Diamond-drilling (water filled hole)							
Temperature range	I: 24 °C / 40 °C	$\tau_{Rk,cr}$	[N/mm²]	6,5	6,5	6,0	6,0
	II: 35 °C / 60 °C			6,5	6,5	6,0	6,0
	III: 50 °C / 72 °C			6,5	6,0	6,0	6,0
Installation factors; Diamond-drilling							
Dry or wet concrete		γ_{inst}	[-]	1,0			
Water filled hole				1,2		1,4	

Table C16.1: Characteristic resistance to combined pull-out and concrete failure for metric Upat FRA in hammer or diamond drilled holes; uncracked or cracked concrete; working life 100 years

Upat FRA				M12	M16	M20	M24
Combined pull-out and concrete cone failure							
Calculation diameter		d	[mm]	12	16	20	25
Uncracked concrete							
Characteristic bond resistance in uncracked concrete C20/25							
Hammer-drilling with standard drill bit or hollow drill bit (dry or wet concrete)							
Temperature range	I: 24 °C / 40 °C	$\tau_{Rk,100,ucr}$	[N/mm²]	13,2	12,3	11,6	11,1
	II: 35 °C / 60 °C			11,3	10,5	9,8	9,0
	III: 50 °C / 72 °C			8,4	8,5	7,8	7,2
Hammer-drilling with standard drill bit or hollow drill bit (water filled hole)							
Temperature range	I: 24 °C / 40 °C	$\tau_{Rk,100,ucr}$	[N/mm²]	13,2	11,8	10,7	9,4
	II: 35 °C / 60 °C			10,5	9,0	8,3	7,5
	III: 50 °C / 72 °C			7,8	7,8	7,2	5,9
Installation factors; Hammer-drilling with standard drill bit or hollow drill bit							
Dry or wet concrete		γ_{inst}	[-]	1,0			
Water filled hole				1,4			
Diamond-drilling (dry or wet concrete as well as water filled hole)							
Temperature range	I: 24 °C / 40 °C	$\tau_{Rk,100,ucr}$	[N/mm²]	9,8	9,0	7,5	6,8
	II: 35 °C / 60 °C			9,8	9,0	7,5	6,8
	III: 50 °C / 72 °C			7,2	7,2	6,5	5,9
Installation factors; Diamond-drilling							
Dry or wet concrete		γ_{inst}	[-]	1,0			
Water filled hole				1,4			
Upat FRA				**M12**	**M16**	**M20**	**M24**
Combined pull-out and concrete cone failure							
Calculation diameter		d	[mm]	12	16	20	25
Cracked concrete							
Characteristic bond resistance in cracked concrete C20/25							
Hammer-drilling with standard drill bit or hollow drill bit (dry or wet concrete)							
Temperature range	I: 24 °C / 40 °C	$\tau_{Rk,100,cr}$	[N/mm²]	6,4	5,2	5,2	5,2
	II: 35 °C / 60 °C			6,4	5,2	5,2	5,2
	III: 50 °C / 72 °C			6,4	5,2	5,2	5,2
Hammer-drilling with standard drill bit or hollow drill bit (water filled hole)							
Temperature range	I: 24 °C / 40 °C	$\tau_{Rk,100,cr}$	[N/mm²]	5,2	4,2	3,9	3,9
	II: 35 °C / 60 °C			5,2	4,2	3,9	3,9
	III: 50 °C / 72 °C			5,2	3,9	3,9	3,9
Installation factors; Hammer-drilling with standard drill bit or hollow drill bit							
Dry or wet concrete		γ_{inst}	[-]	1,0			
Water filled hole				1,2		1,4	
Diamond-drilling (dry or wet concrete)							
Temperature range	I: 24 °C / 40 °C	$\tau_{Rk,100,cr}$	[N/mm²]	5,6	3,9	3,9	4,6
	II: 35 °C / 60 °C			5,6	3,9	3,9	4,6
	III: 50 °C / 72 °C			5,6	3,9	3,9	4,6
Installation factors; Diamond-drilling							
Dry or wet concrete		γ_{inst}	[-]	1,0			

Table C17.1: Displacements for metric Anchor rods / Threaded rods

Anchor rod / Threaded rod		M8	M10	M12	M14	M16	M20	M22	M24	M27	M30
Displacement-Factors for tension loading [1)]											
Uncracked or cracked concrete; Temperature range I, II, III											
$\delta_{N0\text{-Factor}}$	[mm/(N/mm²)]	0,07	0,08	0,09	0,09	0,10	0,11	0,11	0,12	0,12	0,13
$\delta_{N\infty\text{-Factor}}$		0,11	0,12	0,13	0,14	0,15	0,16	0,17	0,18	0,19	0,19
Displacement-Factors for shear loading [2)]											
Uncracked or cracked concrete; Temperature range I, II, III											
$\delta_{V0\text{-Factor}}$	[mm/kN]	0,18	0,15	0,12	0,10	0,09	0,07	0,07	0,06	0,05	0,05
$\delta_{V\infty\text{-Factor}}$		0,27	0,22	0,18	0,16	0,14	0,11	0,10	0,09	0,08	0,07

[1)] Calculation of effective displacement:

$\delta_{N0} = \delta_{N0\text{-Factor}} \cdot \tau$

$\delta_{N\infty} = \delta_{N\infty\text{-Factor}} \cdot \tau$

τ = acting bond strength under tension loading

[2)] Calculation of effective displacement:

$\delta_{V0} = \delta_{V0\text{-Factor}} \cdot V$

$\delta_{V\infty} = \delta_{V\infty\text{-Factor}} \cdot V$

V = acting shear loading

Table C17.2: Displacements for metric Upat IST

Upat IST		M8	M10	M12	M16	M20
Displacement-Factors for tension loading [1)]						
Uncracked or cracked concrete; Temperature range I, II, III						
$\delta_{N0\text{-Factor}}$	[mm/(N/mm²)]	0,09	0,10	0,10	0,11	0,13
$\delta_{N\infty\text{-Factor}}$		0,13	0,15	0,16	0,17	0,19
Displacement-Factors for shear loading [2)]						
Uncracked or cracked concrete; Temperature range I, II, III						
$\delta_{V0\text{-Factor}}$	[mm/kN]	0,12	0,09	0,08	0,07	0,05
$\delta_{V\infty\text{-Factor}}$		0,18	0,14	0,12	0,10	0,08

[1)] Calculation of effective displacement:

$\delta_{N0} = \delta_{N0\text{-Factor}} \cdot \tau$

$\delta_{N\infty} = \delta_{N\infty\text{-Factor}} \cdot \tau$

τ = acting bond strength under tension loading

[2)] Calculation of effective displacement:

$\delta_{V0} = \delta_{V0\text{-Factor}} \cdot V$

$\delta_{V\infty} = \delta_{V\infty\text{-Factor}} \cdot V$

V = acting shear loading

Table C18.1: Displacements for metric reinforcing bars

Nominal diameter of the bar	ϕ	8	10	12	14	16	18	20	22	24	25	26	28	30	32	34	36	40
Displacement-Factors for tension loading [1)]																		
Uncracked or cracked concrete; Temperature range I, II, III																		
$\delta_{N0\text{-Factor}}$	[mm/(N/mm²)]	0,07	0,08	0,09	0,09	0,10	0,10	0,11	0,11	0,12	0,12	0,12	0,13	0,13	0,13	0,14	0,14	0,15
$\delta_{N\infty\text{-Factor}}$		0,11	0,12	0,13	0,14	0,15	0,16	0,16	0,17	0,18	0,18	0,18	0,19	0,19	0,20	0,20	0,21	0,22
Displacement-Factors for shear loading [2)]																		
Uncracked or cracked concrete; Temperature range I, II, III																		
$\delta_{V0\text{-Factor}}$	[mm/kN]	0,18	0,15	0,12	0,10	0,09	0,08	0,07	0,07	0,06	0,06	0,06	0,05	0,05	0,05	0,04	0,04	0,04
$\delta_{V\infty\text{-Factor}}$		0,27	0,22	0,18	0,16	0,14	0,12	0,11	0,10	0,09	0,09	0,08	0,08	0,07	0,07	0,06	0,06	0,05

[1)] Calculation of effective displacement:

$\delta_{N0} = \delta_{N0\text{-Factor}} \cdot \tau$

$\delta_{N\infty} = \delta_{N\infty\text{-Factor}} \cdot \tau$

τ = acting bond strength under tension loading

[2)] Calculation of effective displacement:

$\delta_{V0} = \delta_{V0\text{-Factor}} \cdot V$

$\delta_{V\infty} = \delta_{V\infty\text{-Factor}} \cdot V$

V = acting shear loading

Table C18.2: Displacements for metric Upat FRA

Upat FRA		M12	M16	M20	M24
Displacement-Factors for tension loading [1)]					
Uncracked or cracked concrete; Temperature range I, II, III					
$\delta_{N0\text{-Factor}}$	[mm/(N/mm²)]	0,09	0,10	0,11	0,12
$\delta_{N\infty\text{-Factor}}$		0,13	0,15	0,16	0,18
Displacement-Factors for shear loading [2)]					
Uncracked or cracked concrete; Temperature range I, II, III					
$\delta_{V0\text{-Factor}}$	[mm/kN]	0,12	0,09	0,07	0,06
$\delta_{V\infty\text{-Factor}}$		0,18	0,14	0,11	0,09

[1)] Calculation of effective displacement:

$\delta_{N0} = \delta_{N0\text{-Factor}} \cdot \tau$

$\delta_{N\infty} = \delta_{N\infty\text{-Factor}} \cdot \tau$

τ = acting bond strength under tension loading

[2)] Calculation of effective displacement:

$\delta_{V0} = \delta_{V0\text{-Factor}} \cdot V$

$\delta_{V\infty} = \delta_{V\infty\text{-Factor}} \cdot V$

V = acting shear loading

Table C19.1: Characteristic resistance to steel failure under tension loading for fractional Threaded rods part 1

Threaded rod				3/8"	1/2"	5/8"	3/4"	7/8"	1"	1 1/8"
Characteristic resistance to steel failure under tension loading										
Characteristic resistance $N_{Rk,s}$	Steel zinc plated	Property class	F568M, Class 5.8	[kN]	25,0	45,7	72,9	107,9	148,9	195,4	246,0
			F1554, Grade 36		19,9	36,5	58,3	86,2	119,1	156,2	196,7
			F1554, Grade 55		25,8	47,3	75,3	111,5	154,0	202,0	254,4
			F1554, Grade 105		43,0	78,8	125,6	185,9	256,7	336,8	424,0
			A193, B7		43,0	78,8	125,6	185,9	256,7	336,8	424,0
			F593, Alloy Group 2		34,4	63,0	100,5	126,4	174,5	229,0	288,3
	Stainless steel R		A193, Grade B8M, Class 1		25,8	47,3	75,3	111,5	154,0	202,0	254,4
			A193, Grade B8M, Class 2B		32,7	59,9	95,4	141,3	195,1	255,9	322,2
Partial factors [1]											
Partial factor $\gamma_{Ms,N}$	Steel zinc plated	Property class	F568M, Class 5.8	[-]	1,50						
			F1554, Grade 36		1,94						
			F1554, Grade 55		1,64						
			F1554, Grade 105		1,43						
			A193, B7		1,43						
			F593, Alloy Group 2		1,85			2,27			
	Stainless steel R		A193, Grade B8M, Class 1		3,00						
			A193, Grade B8M, Class 2B		1,52						

[1] In absence of other national regulations.

Table C20.1: Characteristic resistance to steel failure under shear loading for fractional Threaded rods part 2

Threaded rod				3/8	1/2"	5/8"	3/4"	7/8"	1"	1 1/8"
Characteristic resistance to steel failure under shear loading										
without lever arm										
Characteristic resistance $V^0_{Rk,s}$	Steel zinc plated	Property class	F568M, Class 5.8	[kN]	15,0	27,4	43,7	64,7	89,3	117,2	147,6
			F1554, Grade 36		11,9	21,9	34,9	51,7	71,4	93,7	118,0
			F1554, Grade 55		12,9	23,6	37,6	55,7	77,0	101,0	127,2
			F1554, Grade 105		21,5	39,4	62,8	92,9	128,3	168,4	212,0
			A193, B7		21,5	39,4	62,8	92,9	128,3	168,4	212,0
			F593, Alloy Group 2		17,2	31,5	50,2	63,2	87,2	114,5	144,1
	Stainless steel R		A193, Grade B8M, Class 1		12,9	23,6	37,6	55,7	77,0	101,0	127,2
			A193, Grade B8M, Class 2B		16,3	29,9	47,7	70,6	97,5	127,9	161,1
Ductility factor			k_6	[-]	1,0						
with lever arm										
Charact. resistance $M^0_{Rk,s}$	Steel zinc plated	Property class	F568M, Class 5.8	[Nm]	29,9	74,0	148,9	268,2	435,1	653,8	923,5
			F1554, Grade 36		23,9	59,2	119,1	214,5	348,0	522,9	738,6
			F1554, Grade 55		30,9	76,6	154,0	277,4	450,0	676,1	955,1
			F1554, Grade 105		51,5	127,6	256,8	462,4	750,0	1126,9	1591,9
			A193, B7		51,5	127,6	256,8	462,4	750,0	1126,9	1591,9
			F593, Alloy Group 2		41,2	102,1	205,4	314,4	510,0	766,3	1082,5
	Stainless steel R		A193, Grade B8M, Class 1		30,9	76,6	154,0	277,4	450,0	676,1	955,1
			A193, Grade B8M, Class 2B		39,1	97,0	195,1	351,4	570,0	856,4	1209,8
Partial factors [1]											
Partial factor $\gamma_{Ms,V}$	Steel zinc plated	Property class	F568M, Class 5.8	[-]	1,25						
			F1554, Grade 36		1,61						
			F1554, Grade 55		1,36						
			F1554, Grade 105		1,50						
			A193, B7		1,50						
			F593, Alloy Group 2		1,54			1,89			
	Stainless steel R		A193, Grade B8M, Class 1		2,50						
			A193, Grade B8M, Class 2B		1,27						

[1] In absence of other national regulations.

Table C21.1: Characteristic resistance to steel failure under tension loading for fractional Upat IST part 1

Upat IST		IST	Screw		3/8"	1/2"	5/8"	3/4"
Characteristic resistance to steel failure under tension loading								
Characteristic resistance with screw $N_{Rk,s}$	Property class, Steel zinc plated	5.8	F568M, Class 5.8	[kN]	25,0	45,7	72,9	107,9
			F1554, Grade 36		20,0	36,6	58,3	86,3
			F1554, Grade 55		25,8	47,3	75,3	111,5
			F1554, Grade 105		43,1	76,4	110,8	186,0
			A193, B7		43,1	76,4	110,8	186,0
	Property class, Stainless steel R	70	F593, Alloy Group 2		34,4	63,0	100,4	126,4
			A193, Grade B8M, Class 1		25,8	47,3	75,3	111,5
			A193, Grade B8M, Class 2B		32,7	59,9	95,4	141,3
Partial factors [1)]								
Partial factors $\gamma_{Ms,N}$	Property class, Steel zinc plated	5.8	F568M, Class 5.8	[-]	1,50			
			F1554, Grade 36		1,94			
			F1554, Grade 55		1,64			
			F1554, Grade 105		1,43	1,50		
			A193, B7		1,43	1,50		
	Property class, Stainless steel R	70	F593, Alloy Group 2		1,85			2,27
			A193, Grade B8M, Class 1		3,00			
			A193, Grade B8M, Class 2B		1,52			

[1)] In absence of other national regulations.

Table C22.1: Characteristic resistance to steel failure under shear loading for fractional Upat IST part 2

Upat IST		IST	Screw		3/8"	1/2"	5/8"	3/4"
Characteristic resistance to steel failure under shear loading								
Without lever arm								
Characteristic resistance with screw $V^0_{Rk,s}$	Property class, Steel zinc plated	5.8	F568M, Class 5.8	[kN]	15,0	27,4	43,7	64,7
			F1554, Grade 36		11,9	21,9	34,9	51,7
			F1554, Grade 55		12,9	23,6	37,6	55,7
			F1554, Grade 105		21,5	39,4	62,8	92,9
			A193, B7		21,5	39,4	62,8	92,9
	Property class, Stainless steel R	70	F593, Alloy Group 2		17,2	31,5	50,2	63,2
			A193, Grade B8M, Class 1		12,9	23,6	37,6	55,7
			A193, Grade B8M, Class 2B		16,3	29,9	47,7	70,6
With lever arm								
Characteristic resistance with screw $M^0_{Rk,s}$	Property class, Steel zinc plated	5.8	F568M, Class 5.8	[Nm]	29,9	74,0	148,9	268,2
			F1554, Grade 36		23,9	59,2	119,1	214,5
			F1554, Grade 55		30,9	76,6	154,0	277,4
			F1554, Grade 105		51,5	127,6	256,8	462,4
			A193, B7		51,5	127,6	256,8	462,4
	Property class, Stainless steel R	70	F593, Alloy Group 2		41,2	102,1	205,4	314,4
			A193, Grade B8M, Class 1		30,9	76,6	154,0	277,4
			A193, Grade B8M, Class 2B		39,1	97,0	195,1	351,4
Partial factors [1]								
Partial factors $\gamma_{Ms,V}$	Property class, Steel zinc plated	5.8	F568M, Class 5.8	[-]	1,25			
			F1554, Grade 36		1,61			
			F1554, Grade 55		1,36			
			F1554, Grade 105		1,50			
			A193, B7		1,50			
	Property class, Stainless steel R	70	F593, Alloy Group 2		1,54			1,89
			A193, Grade B8M, Class 1		2,50			
			A193, Grade B8M, Class 2B		1,27			

[1] In absence of other national regulations.

Table C23.1: Characteristic restistance to steel failure under tension / shear loading for fractional reinforcing bars

Rebar size			#3	#4	#5	#6	#7	#8	#9	#10[1)]
Characteristic resistance to steel failure under tension loading										
Characteristic resistance	$N_{Rk,s}$	[kN]	$A_s \cdot f_{uk}$ [2)]							
Characteristic resistance to steel failure under shear loading										
Without lever arm										
Characteristic resistance	$V^0_{Rk,s}$	[kN]	k_6 [3)] $\cdot A_s \cdot f_{uk}$ [2)]							
Ductility factor	k_7	[-]	1,0							
With lever arm										
Characteristic resistance	$M^0_{Rk,s}$	[Nm]	$1,2 \cdot W_{el} \cdot f_{uk}$ [2)]							

1) Not allowed for hollow drill bit.
2) f_{uk} respectively shall be taken from the specifications of the reinforcing bar.
3) In accordance with EN 1992-4:2018 section 7.2.2.3.1:
   k_6 = 0,6 for fasteners made of carbon steel with $f_{uk} \leq 500$ N/mm²,
   = 0,5 for fasteners made of carbon steel with 500 N/mm² < $f_{uk} \leq 1000$ N/mm²,
   = 0,5 for fasteners made of stainless steel.

Table C24.1: Characteristic resistance for concrete failure under tension / shear loading for fractional sizes

Size			All sizes							
Characteristic resistance to concrete failure under tension loading										
Installation factor	γ_{inst}	[-]	See Annex C25 to C34, C46 and C47							
Factors for the compressive strength of concrete > C20/25										
Increasing factor ψ_c for cracked or uncracked concrete $\tau_{Rk(X,Y)} = \psi_c \cdot \tau_{Rk(C20/25)}$	C25/30	Ψ_c	[-]	1,02						
	C30/37			1,04						
	C35/45			1,06						
	C40/50			1,07						
	C45/55			1,08						
	C50/60			1,09						
Splitting failure										
Edge distance	$h / h_{ef} \geq 2,0$	$c_{cr,sp}$	[mm]	$1,0\ h_{ef}$						
	$2,0 > h / h_{ef} > 1,3$			$4,6\ h_{ef} - 1,8\ h$						
	$h / h_{ef} \leq 1,3$			$2,26\ h_{ef}$						
Spacing		$s_{cr,sp}$		$2\ c_{cr,sp}$						
Concrete cone failure										
Uncracked concrete		$k_{ucr,N}$	[-]	11,0 [1]						
Cracked concrete		$k_{cr,N}$		7,7 [1]						
Edge distance		$c_{cr,N}$	[mm]	$1,5\ h_{ef}$						
Spacing		$s_{cr,N}$		$2\ c_{cr,N}$						
Factors for sustained tension loading										
Temperature range				24 °C / 40 °C		35 °C / 60 °C		50 °C / 72 °C		
Factor		ψ^0_{sus}		0,77		0,60		0,48		
Factor		$\psi^0_{sus,100}$		0,77		0,60		0,71		
Characteristic resistance to concrete failure under shear loading										
Installation factor		γ_{inst}	[-]	1,0						
Concrete pry-out failure										
Factor for pry-out failure		k_8	[-]	2,0						
Concrete edge failure										
Effective length of fastener in shear loading		l_f	[mm]	for $d_{nom} \leq 24$ mm: min (h_{ef}; 12 d_{nom}) for $d_{nom} > 24$ mm: min (h_{ef}; max (8 d_{nom}; 300 mm))						
Calculation diameters										
Size				3/8"	1/2"	5/8"	3/4"	7/8"	1"	1 1/8"
Anchor rods and Threaded rods		d_{nom}	[mm]	9,5	12,7	15,9	19,1	22,2	25,4	28,6
Upat IST		d_{nom}		15,7	18,0	22,0	28,0	-[2]	-[2]	-[2]
Rebar size				#3	#4	#5	#6	#7	#8	#9	#10
Reinforcing bar		d_{nom}	[mm]	9,5	12,7	15,9	19,1	22,2	25,4	28,7	32,3

[1] Values only valid when using SI units.
[2] Anchor type not part of the assessment.

Upat Injection system UPM 55

Performance
Characteristic resistance for concrete failure under tension / shear loading for fractional sizes

Annex C24
Appendix 50 / 77

Table C25.1: Characteristic resistance to combined pull-out and concrete failure for fractional Threaded rods in hammer or diamond drilled holes; uncracked concrete; working life 50 years

Threaded rod				3/8"	1/2"	5/8"	3/4"	7/8"	1"	1 1/8"
Combined pull-out and concrete cone failure										
Calculation diameter		d	[mm]	9,5	12,7	15,9	19,1	22,2	25,4	28,6
Uncracked concrete										
Characteristic bond resistance in uncracked concrete C20/25										
Hammer-drilling with standard drill bit or hollow drill bit (dry or wet concrete)										
Temperature range	I: 24 °C / 40 °C	$\tau_{Rk,ucr}$	[N/mm²]	20,0	18,6	17,7	16,8	16,2	15,8	15,3
	II: 35 °C / 60 °C			18,0	18,0	17,0	16,0	15,0	15,0	14,0
	III: 50 °C / 72 °C			17,0	17,0	16,0	15,0	14,0	14,0	13,0
Hammer-drilling with standard drill bit or hollow drill bit (water filled hole)										
Temperature range	I: 24 °C / 40 °C	$\tau_{Rk,ucr}$	[N/mm²]	20,0	18,6	17,0	15,4	14,3	13,7	12,8
	II: 35 °C / 60 °C			16,0	15,0	13,0	11,0	11,0	10,0	9,0
	III: 50 °C / 72 °C			14,0	14,0	12,0	11,0	10,0	9,0	9,0
Installation factors; Hammer-drilling with standard drill bit or hollow drill bit										
Dry or wet concrete		γ_{inst}	[-]	1,0						
Water filled hole				1,4						
Diamond-drilling (dry or wet concrete)										
Temperature range	I: 24 °C / 40 °C	$\tau_{Rk,ucr}$	[N/mm²]	14,4	13,3	12,3	11,8	11,3	10,8	10,3
	II: 35 °C / 60 °C			15,0	13,0	12,0	10,0	10,0	9,0	9,0
	III: 50 °C / 72 °C			14,0	12,0	11,0	10,0	9,0	8,0	8,0
Diamond-drilling (water filled hole)										
Temperature range	I: 24 °C / 40 °C	$\tau_{Rk,ucr}$	[N/mm²]	17,3	15,0	13,6	12,4	11,5	10,8	10,1
	II: 35 °C / 60 °C			15,0	13,0	12,0	10,0	10,0	9,0	9,0
	III: 50 °C / 72 °C			14,0	12,0	11,0	10,0	9,0	8,0	8,0
Installation factors; Diamond-drilling										
Dry or wet concrete		γ_{inst}	[-]	1,0						
Water filled hole				1,4						

Table C26.1: Characteristic resistance to combined pull-out and concrete failure for fractional Threaded rods in hammer or diamond drilled holes; cracked concrete; working life 50 years

Threaded rod				3/8"	1/2"	5/8"	3/4"	7/8"	1"	1 1/8"
Combined pull-out and concrete cone failure										
Calculation diameter		d	[mm]	9,5	12,7	15,9	19,1	22,2	25,4	28,6
Cracked concrete										
Characteristic bond resistance in cracked concrete C20/25										
Hammer-drilling with standard drill bit or hollow drill bit (dry or wet concrete)										
Temperature range	I: 24 °C / 40 °C	$\tau_{Rk,cr}$	[N/mm²]	8,7	9,9	9,5	8,5	8,5	8,5	8,5
	II: 35 °C / 60 °C			8,7	9,9	9,5	8,5	8,5	8,5	8,5
	III: 50 °C / 72 °C			8,2	9,3	8,9	8,5	8,5	8,5	8,5
Hammer-drilling with standard drill bit or hollow drill bit (water filled hole)										
Temperature range	I: 24 °C / 40 °C	$\tau_{Rk,cr}$	[N/mm²]	7,5	8,5	7,8	6,0	6,0	6,0	6,0
	II: 35 °C / 60 °C			7,5	8,5	7,8	6,0	6,0	6,0	6,0
	III: 50 °C / 72 °C			7,0	8,0	7,3	6,0	6,0	6,0	6,0
Installation factors; Hammer-drilling with standard drill bit or hollow drill bit										
Dry or wet concrete		γ_{inst}	[-]	1,0						
Water filled hole				1,2			1,4			
Diamond-drilling (dry or wet concrete)										
Temperature range	I: 24 °C / 40 °C	$\tau_{Rk,cr}$	[N/mm²]	7,0	7,0	6,0	6,0	7,0	7,0	7,0
	II: 35 °C / 60 °C			7,0	7,0	6,0	6,0	7,0	7,0	7,0
	III: 50 °C / 72 °C			7,0	7,0	6,0	6,0	7,0	7,0	7,0
Diamond-drilling (water filled hole)										
Temperature range	I: 24 °C / 40 °C	$\tau_{Rk,cr}$	[N/mm²]	7,5	7,5	6,0	6,0	6,0	6,0	6,0
	II: 35 °C / 60 °C			7,5	7,5	6,0	6,0	6,0	6,0	6,0
	III: 50 °C / 72 °C			7,0	7,0	6,0	6,0	6,0	6,0	6,0
Installation factors; Diamond-drilling										
Dry or wet concrete		γ_{inst}	[-]	1,0						
Water filled hole				1,2			1,4			

Table C27.1: Characteristic resistance to combined pull-out and concrete failure for fractional Threaded rods in hammer or diamond drilled holes; uncracked concrete; working life 100 years

Threaded rod				3/8"	1/2"	5/8"	3/4"	7/8"	1"	1 1/8"
Combined pull-out and concrete cone failure										
Calculation diameter		d	[mm]	9,5	12,7	15,9	19,1	22,2	25,4	28,6
Uncracked concrete										
Characteristic bond resistance in uncracked concrete C20/25										
Hammer-drilling with standard drill bit or hollow drill bit (dry or wet concrete)										
Temperature range	I: 24 °C / 40 °C	$\tau_{Rk,100,ucr}$	[N/mm²]	16,4	15,3	14,5	13,8	13,3	12,9	12,6
	II: 35 °C / 60 °C			13,5	13,5	12,8	12,0	11,3	11,3	10,5
	III: 50 °C / 72 °C			10,2	10,2	10,4	9,8	9,1	9,1	8,5
Hammer-drilling with standard drill bit or hollow drill bit (water filled hole)										
Temperature range	I: 24 °C / 40 °C	$\tau_{Rk,100,ucr}$	[N/mm²]	16,4	15,3	13,9	12,6	11,7	11,2	10,5
	II: 35 °C / 60 °C			12,0	11,3	9,8	8,3	8,3	7,5	6,8
	III: 50 °C / 72 °C			8,4	8,4	7,8	7,2	6,5	5,9	5,9
Installation factors; Hammer-drilling with standard drill bit or hollow drill bit										
Dry or wet concrete		γ_{inst}	[-]	1,0						
Water filled hole				1,4						
Diamond-drilling (dry or wet concrete)										
Temperature range	I: 24 °C / 40 °C	$\tau_{Rk,100,ucr}$	[N/mm²]	11,8	10,8	10,1	9,7	9,3	8,8	8,5
	II: 35 °C / 60 °C			11,3	9,8	9,0	7,5	7,5	6,8	6,8
	III: 50 °C / 72 °C			8,4	7,2	7,2	6,5	5,9	5,2	5,2
Diamond-drilling (water filled hole)										
Temperature range	I: 24 °C / 40 °C	$\tau_{Rk,100,ucr}$	[N/mm²]	14,2	12,3	11,2	10,2	9,4	8,9	8,3
	II: 35 °C / 60 °C			11,3	9,8	9,0	7,5	7,5	6,8	6,8
	III: 50 °C / 72 °C			8,4	7,2	7,2	6,5	5,9	5,2	5,2
Installation factors; Diamond-drilling										
Dry or wet concrete		γ_{inst}	[-]	1,0						
Water filled hole				1,4						

Table C28.1: Characteristic resistance to combined pull-out and concrete failure for fractional Threaded rods in hammer or diamond drilled holes; cracked concrete; working life 100 years

Threaded rod				3/8"	1/2"	5/8"	3/4"	7/8"	1"	1 1/8"
Combined pull-out and concrete cone failure										
Calculation diameter		d	[mm]	9,5	12,7	15,9	19,1	22,2	25,4	28,6
Cracked concrete										
Characteristic bond resistance in cracked concrete C20/25										
Hammer-drilling with standard drill bit or hollow drill bit (dry or wet concrete)										
Temperature range	I: 24 °C / 40 °C	$\tau_{Rk,100,cr}$	[N/mm²]	7,0	7,5	7,2	6,9	6,8	6,5	6,3
	II: 35 °C / 60 °C			7,0	7,5	7,2	6,9	6,8	6,5	6,3
	III: 50 °C / 72 °C			6,6	7,1	6,8	6,4	6,4	6,1	6,0
Hammer-drilling with standard drill bit or hollow drill bit (water filled hole)										
Temperature range	I: 24 °C / 40 °C	$\tau_{Rk,100,cr}$	[N/mm²]	6,0	6,5	5,9	4,9	4,8	4,6	4,4
	II: 35 °C / 60 °C			6,0	6,5	5,9	4,9	4,8	4,6	4,4
	III: 50 °C / 72 °C			5,6	6,1	5,5	4,5	4,5	4,3	4,3
Installation factors; Hammer-drilling with standard drill bit or hollow drill bit										
Dry or wet concrete		γ_{inst}	[-]	1,0						
Water filled hole				1,2			1,4			
Diamond-drilling (dry or wet concrete)										
Temperature range	I: 24 °C / 40 °C	$\tau_{Rk,100,cr}$	[N/mm²]	6,0	5,6	3,9	3,9	4,6	4,6	4,6
	II: 35 °C / 60 °C			6,0	5,6	3,9	3,9	4,6	4,6	4,6
	III: 50 °C / 72 °C			6,0	5,6	3,9	3,9	4,6	4,6	4,6
Installation factors; Diamond-drilling										
Dry or wet concrete		γ_{inst}	[-]	1,0						

Table C29.1: Characteristic resistance to combined pull-out and concrete failure for fractional Upat IST in hammer or diamond drilled holes; uncracked concrete; working life 50 years

Upat IST				3/8"	1/2"	5/8"	3/4"
Combined pull-out and concrete cone failure							
Calculation diameter		d	[mm]	15,7	18,0	22,0	28,0
Uncracked concrete							
Characteristic bond resistance in uncracked concrete C20/25							
Hammer-drilling with standard drill bit or hollow drill bit (dry or wet concrete)							
Temperature range	I: 24 °C / 40 °C	$\tau_{Rk,ucr}$	[N/mm²]	17,6	17,0	16,2	15,3
	II: 35 °C / 60 °C			14,0	14,0	13,0	12,0
	III: 50 °C / 72 °C			13,0	13,0	12,0	11,0
Hammer-drilling with standard drill bit or hollow drill bit (water filled hole)							
Temperature range	I: 24 °C / 40 °C	$\tau_{Rk,ucr}$	[N/mm²]	16,9	15,8	14,3	12,8
	II: 35 °C / 60 °C			12,0	12,0	11,0	10,0
	III: 50 °C / 72 °C			12,0	11,0	10,0	9,0
Installation factors; Hammer-drilling with standard drill bit or hollow drill bit							
Dry or wet concrete		γ_{inst}	[-]	1,0			
Water filled hole				1,4			
Diamond-drilling (dry or wet concrete)							
Temperature range	I: 24 °C / 40 °C	$\tau_{Rk,ucr}$	[N/mm²]	12,3	11,9	11,2	10,4
	II: 35 °C / 60 °C			12,0	11,0	10,0	9,0
	III: 50 °C / 72 °C			11,0	10,0	9,0	8,0
Diamond-drilling (water filled hole)							
Temperature range	I: 24 °C / 40 °C	$\tau_{Rk,ucr}$	[N/mm²]	13,6	12,6	11,4	10,2
	II: 35 °C / 60 °C			12,0	11,0	10,0	9,0
	III: 50 °C / 72 °C			11,0	10,0	9,0	8,0
Installation factors; Diamond-drilling							
Dry or wet concrete		γ_{inst}	[-]	1,0			
Water filled hole				1,4			

Table C30.1: Characteristic resistance to combined pull-out and concrete failure for fractional Upat IST in hammer or diamond drilled holes; cracked concrete; working life 50 years

Upat IST				3/8"	1/2"	5/8"	3/4"
Combined pull-out and concrete cone failure							
Calculation diameter		d	[mm]	15,7	18,0	22,0	28,0
Cracked concrete							
Characteristic bond resistance in cracked concrete C20/25							
Hammer-drilling with standard drill bit or hollow drill bit (dry or wet concrete)							
Temperature range	I: 24 °C / 40 °C	$\tau_{Rk,cr}$	[N/mm²]	6,0	6,0	7,0	7,0
	II: 35 °C / 60 °C			6,0	6,0	7,0	7,0
	III: 50 °C / 72 °C			6,0	6,0	7,0	7,0
Hammer-drilling with standard drill bit or hollow drill bit (water filled hole)							
Temperature range	I: 24 °C / 40 °C	$\tau_{Rk,cr}$	[N/mm²]	6,5	6,0	6,0	6,0
	II: 35 °C / 60 °C			6,5	6,0	6,0	6,0
	III: 50 °C / 72 °C			6,0	6,0	6,0	6,0
Installation factors; Hammer-drilling with standard drill bit or hollow drill bit							
Dry or wet concrete		γ_{inst}	[-]	1,0			
Water filled hole				1,2		1,4	
Diamond-drilling (dry or wet concrete)							
Temperature range	I: 24 °C / 40 °C	$\tau_{Rk,cr}$	[N/mm²]	6,0	6,0	7,0	7,0
	II: 35 °C / 60 °C			6,0	6,0	7,0	7,0
	III: 50 °C / 72 °C			6,0	6,0	7,0	7,0
Diamond-drilling (water filled hole)							
Temperature range	I: 24 °C / 40 °C	$\tau_{Rk,cr}$	[N/mm²]	6,5	6,0	6,0	6,0
	II: 35 °C / 60 °C			6,5	6,0	6,0	6,0
	III: 50 °C / 72 °C			6,0	6,0	6,0	6,0
Installation factors; Diamond-drilling							
Dry or wet concrete		γ_{inst}	[-]	1,0			
Water filled hole				1,2		1,4	

Table C31.1: Characteristic resistance to combined pull-out and concrete failure for fractional Upat IST in hammer or diamond drilled holes; uncracked or cracked concrete; working life 100 years

Upat IST				3/8"	1/2"	5/8"	3/4"
Combined pull-out and concrete cone failure							
Calculation diameter		d	[mm]	15,7	18,0	22,0	28,0
Uncracked concrete							
Characteristic bond resistance in uncracked concrete C20/25							
Hammer-drilling with standard drill bit or hollow drill bit (dry or wet concrete)							
Temperature range	I: 24 °C / 40 °C	$\tau_{Rk,100,ucr}$	[N/mm²]	14,4	14,0	13,3	12,6
	II: 35 °C / 60 °C			10,5	10,5	9,8	9,0
	III: 50 °C / 72 °C			7,8	7,8	7,8	7,2
Hammer-drilling with standard drill bit or hollow drill bit (water filled hole)							
Temperature range	I: 24 °C / 40 °C	$\tau_{Rk,100,ucr}$	[N/mm²]	13,9	13,0	11,7	10,5
	II: 35 °C / 60 °C			9,0	9,0	8,3	7,5
	III: 50 °C / 72 °C			7,2	6,6	6,5	5,9
Installation factors; Hammer-drilling with standard drill bit or hollow drill bit							
Dry or wet concrete		γ_{inst}	[-]	1,0			
Water filled hole				1,4			
Diamond-drilling (dry or wet concrete)							
Temperature range	I: 24 °C / 40 °C	$\tau_{Rk,100,ucr}$	[N/mm²]	10,1	9,8	9,2	8,6
	II: 35 °C / 60 °C			9,0	8,3	7,5	6,8
	III: 50 °C / 72 °C			6,6	6,0	5,9	5,2
Diamond-drilling (water filled hole)							
Temperature range	I: 24 °C / 40 °C	$\tau_{Rk,100,ucr}$	[N/mm²]	11,2	10,3	9,3	8,4
	II: 35 °C / 60 °C			9,0	8,3	7,5	6,8
	III: 50 °C / 72 °C			6,6	6,0	5,9	5,2
Installation factors; Diamond-drilling							
Dry or wet concrete		γ_{inst}	[-]	1,0			
Water filled hole				1,4			
Cracked concrete							
Characteristic bond resistance in cracked concrete C20/25							
Hammer-drilling with standard drill bit or hollow drill bit (dry or wet concrete)							
Temperature range	I: 24 °C / 40 °C	$\tau_{Rk,100,cr}$	[N/mm²]	5,1	4,8	4,6	4,6
	II: 35 °C / 60 °C			5,1	4,8	4,6	4,6
	III: 50 °C / 72 °C			5,1	4,8	4,6	4,6
Hammer-drilling with standard drill bit or hollow drill bit (water filled hole)							
Temperature range	I: 24 °C / 40 °C	$\tau_{Rk,100,cr}$	[N/mm²]	5,5	4,8	3,9	3,9
	II: 35 °C / 60 °C			5,5	4,8	3,9	3,9
	III: 50 °C / 72 °C			5,1	4,8	3,9	3,9
Installation factors; Hammer-drilling with standard drill bit or hollow drill bit							
Dry or wet concrete		γ_{inst}	[-]	1,0			
Water filled hole				1,2		1,4	
Diamond-drilling (dry or wet concrete)							
Temperature range	I: 24 °C / 40 °C	$\tau_{Rk,100,cr}$	[N/mm²]	5,1	4,8	4,6	4,6
	II: 35 °C / 60 °C			5,1	4,8	4,6	4,6
	III: 50 °C / 72 °C			5,1	4,8	4,6	4,6
Installation factors; Diamond-drilling							
Dry or wet concrete		γ_{inst}	[-]	1,0			

Upat Injection system UPM 55

Performance
Characteristic resistance to combined pull-out and concrete failure for fractional Upat IST; working life 100 years

Annex C31
Appendix 57 / 77

Table C32.1: Characteristic resistance to combined pull-out and concrete failure for fractional reinforcing bars in hammer or diamond drilled holes; uncracked concrete; working life 50 years

Rebar size				#3	#4	#5	#6	#7	#8	#9	#10[1)]
Combined pull-out and concrete cone failure											
Calculation diameter		d	[mm]	9,5	12,7	15,9	19,1	22,2	25,4	28,7	32,3
Uncracked concrete											
Characteristic bond resistance in uncracked concrete C20/25											
Hammer-drilling with standard drill bit or hollow drill bit (dry or wet concrete)											
Temperature range	I: 24 °C / 40 °C	$\tau_{Rk,ucr}$	[N/mm²]	17,0	15,9	15,1	14,4	13,9	13,4	13,1	12,7
	II: 35 °C / 60 °C			15,0	15,0	14,0	13,0	13,0	12,0	12,0	12,0
	III 50 °C / 72 °C			14,0	14,0	13,0	12,0	12,0	11,0	11,0	11,0
Hammer-drilling with standard drill bit or hollow drill bit (water filled hole)											
Temperature range	I: 24 °C / 40 °C	$\tau_{Rk,ucr}$	[N/mm²]	17,0	15,9	14,5	13,2	12,3	11,6	10,5	10,2
	II: 35 °C / 60 °C			16,0	14,0	12,0	11,0	11,0	10,0	10,0	9,0
	III 50 °C / 72 °C			14,0	13,0	12,0	11,0	10,0	9,0	9,0	8,0
Installation factors; Hammer-drilling with standard drill bit or hollow drill bit											
Dry or wet concrete		γ_{inst}	[-]	1,0							
Water filled hole				1,4							
Diamond-drilling (dry or wet concrete as well as water filled hole)											
Temperature range	I: 24 °C / 40 °C	$\tau_{Rk,ucr}$	[N/mm²]	15,0	13,0	12,0	10,0	10,0	9,0	9,0	8,0
	II: 35 °C / 60 °C			15,0	13,0	12,0	10,0	10,0	9,0	9,0	8,0
	III 50 °C / 72 °C			14,0	12,0	11,0	10,0	9,0	9,0	8,0	8,0
Installation factors; Diamond-drilling											
Dry or wet concrete		γ_{inst}	[-]	1,0							
Water filled hole				1,4							

[1)] Not allowed for drilling with hollow drill bit.

Table C33.1: Characteristic resistance to combined pull-out and concrete failure for fractional reinforcing bars in hammer or diamond drilled holes; cracked concrete; working life 50 years

Rebar size				#3	#4	#5	#6	#7	#8	#9	#10[1)]
Combined pull-out and concrete cone failure											
Calculation diameter		d	[mm]	9,5	12,7	15,9	19,1	22,2	25,4	28,7	32,3
Cracked concrete											
Characteristic bond resistance in cracked concrete C20/25											
Hammer-drilling with standard drill bit or hollow drill bit (dry or wet concrete)											
Temperature range	I: 24 °C / 40 °C	$\tau_{Rk,cr}$	[N/mm²]	7,0	8,0	8,0	8,0	8,0	8,0	8,0	8,0
	II: 35 °C / 60 °C			7,0	8,0	8,0	8,0	8,0	8,0	8,0	8,0
	III 50 °C / 72 °C			7,0	8,0	8,0	8,0	8,0	8,0	8,0	8,0
Hammer-drilling with standard drill bit or hollow drill bit (water filled hole)											
Temperature range	I: 24 °C / 40 °C	$\tau_{Rk,cr}$	[N/mm²]	7,5	6,5	6,5	6,0	6,0	6,0	6,0	5,0
	II: 35 °C / 60 °C			7,5	6,5	6,5	6,0	6,0	6,0	6,0	5,0
	III 50 °C / 72 °C			6,5	6,5	6,0	6,0	6,0	6,0	6,0	5,0
Installation factors; Hammer-drilling with standard drill bit or hollow drill bit											
Dry or wet concrete		γ_{inst}	[-]	1,0							
Water filled hole				1,2			1,4				
Diamond-drilling (dry or wet concrete)											
Temperature range	I: 24 °C / 40 °C	$\tau_{Rk,cr}$	[N/mm²]	7,0	7,0	6,0	6,0	7,0	7,0	7,0	5,0
	II: 35 °C / 60 °C			7,0	7,0	6,0	6,0	7,0	7,0	7,0	5,0
	III 50 °C / 72 °C			7,0	7,0	6,0	6,0	7,0	7,0	7,0	5,0
Diamond-drilling (water filled hole)											
Temperature range	I: 24 °C / 40 °C	$\tau_{Rk,cr}$	[N/mm²]	7,5	6,5	6,5	6,0	6,0	6,0	6,0	5,0
	II: 35 °C / 60 °C			7,5	6,5	6,5	6,0	6,0	6,0	6,0	5,0
	III 50 °C / 72 °C			6,5	6,5	6,0	6,0	6,0	6,0	6,0	5,0
Installation factors; Diamond-drilling											
Dry or wet concrete		γ_{inst}	[-]	1,0							
Water filled hole				1,2			1,4				

[1)] Not allowed for drilling with hollow drill bit.

Table C34.1: Characteristic resistance to combined pull-out and concrete failure for fractional reinforcing bars in hammer or diamond drilled holes; uncracked and cracked concrete; working life 100 years

Rebar size				#3	#4	#5	#6	#7	#8	#9	#10[1)]
Combined pull-out and concrete cone failure											
Calculation diameter		d	[mm]	9,5	12,7	15,9	19,1	22,2	25,4	28,7	32,3
Uncracked concrete											
Characteristic bond resistance in uncracked concrete C20/25											
Hammer-drilling with standard drill bit or hollow drill bit (dry or wet concrete)											
Temperature range	I: 24 °C / 40 °C	$\tau_{Rk,100,ucr}$	[N/mm²]	14,0	13,0	12,4	11,9	11,4	11,0	10,8	10,5
	II: 35 °C / 60 °C			11,3	11,3	10,5	9,8	9,8	9,0	9,0	9,0
	III 50 °C / 72 °C			8,4	8,4	8,5	7,8	7,8	7,2	7,2	7,2
Hammer-drilling with standard drill bit or hollow drill bit (water filled hole)											
Temperature range	I: 24 °C / 40 °C	$\tau_{Rk,100,ucr}$	[N/mm²]	13,9	13,0	11,9	11,0	10,1	9,5	8,6	8,5
	II: 35 °C / 60 °C			12,0	10,5	9,0	8,3	8,3	7,5	7,5	6,8
	III 50 °C / 72 °C			8,4	7,8	7,8	7,2	6,5	5,9	5,9	5,2
Installation factors; Hammer-drilling with standard drill bit or hollow drill bit											
Dry or wet concrete		γ_{inst}	[-]	1,0							
Water filled hole				1,4							
Diamond-drilling (dry or wet concrete as well as water filled hole)											
Temperature range	I: 24 °C / 40 °C	$\tau_{Rk,100,ucr}$	[N/mm²]	11,3	9,8	9,0	7,5	7,5	6,8	6,8	6,0
	II: 35 °C / 60 °C			11,3	9,8	9,0	7,5	7,5	6,8	6,8	6,0
	III 50 °C / 72 °C			8,4	7,2	7,2	6,5	5,9	5,9	5,2	5,2
Installation factors											
Dry or wet concrete		γ_{inst}	[-]	1,0							
Water filled hole				1,4							
Cracked concrete											
Characteristic bond resistance in cracked concrete C20/25											
Hammer-drilling with standard drill bit or hollow drill bit (dry or wet concrete)											
Temperature range	I: 24 °C / 40 °C	$\tau_{Rk,100,cr}$	[N/mm²]	6,0	6,4	5,2	5,2	5,2	5,2	5,2	5,2
	II: 35 °C / 60 °C			6,0	6,4	5,2	5,2	5,2	5,2	5,2	5,2
	III 50 °C / 72 °C			6,0	6,4	5,2	5,2	5,2	5,2	5,2	5,2
Hammer-drilling with standard drill bit or hollow drill bit (water filled hole)											
Temperature range	I: 24 °C / 40 °C	$\tau_{Rk,100,cr}$	[N/mm²]	6,4	5,2	4,2	3,9	3,9	3,9	3,9	3,3
	II: 35 °C / 60 °C			6,4	5,2	4,2	3,9	3,9	3,9	3,9	3,3
	III 50 °C / 72 °C			5,5	5,2	3,9	3,9	3,9	3,9	3,9	3,3
Installation factors; Hammer-drilling with standard drill bit or hollow drill bit											
Dry or wet concrete		γ_{inst}	[-]	1,0							
Water filled hole				1,2			1,4				
Diamond-drilling (dry or wet concrete)											
Temperature range	I: 24 °C / 40 °C	$\tau_{Rk,100,cr}$	[N/mm²]	6,0	5,6	3,9	3,9	4,6	4,6	4,6	3,3
	II: 35 °C / 60 °C			6,0	5,6	3,9	3,9	4,6	4,6	4,6	3,3
	III 50 °C / 72 °C			6,0	5,6	3,9	3,9	4,6	4,6	4,6	3,3
Installation factors											
Dry or wet concrete		γ_{inst}	[-]	1,0							

[1)] Not allowed for drilling with hollow drill bit.

Upat Injection system UPM 55

Performance
Characteristic resistance to combined pull-out and concrete failure for fractional reinforcing bars; uncracked and cracked concrete; working life 100 years

Annex C34
Appendix 60 / 77

Table C35.1: Displacements for fraction Threaded rods

Threaded rod		3/8"	1/2"	5/8"	3/4"	7/8"	1"	1 1/8"
Displacement-Factors for tension loading [1)]								
Uncracked or cracked concrete; Temperature range I, II, III								
$\delta_{N0\text{-Factor}}$	[mm/(N/mm²)]	0,08	0,09	0,10	0,11	0,11	0,12	0,13
$\delta_{N\infty\text{-Factor}}$		0,12	0,13	0,15	0,16	0,17	0,19	0,19
Displacement-Factors for shear loading [2)]								
Uncracked or cracked concrete; Temperature range I, II, III								
$\delta_{V0\text{-Factor}}$	[mm/kN]	0,15	0,12	0,09	0,07	0,07	0,05	0,05
$\delta_{V\infty\text{-Factor}}$		0,22	0,18	0,14	0,11	0,10	0,08	0,07

[1)] Calculation of effective displacement:

$\delta_{N0} = \delta_{N0\text{-Factor}} \cdot \tau$

$\delta_{N\infty} = \delta_{N\infty\text{-Factor}} \cdot \tau$

τ = acting bond strength under tension loading

[2)] Calculation of effective displacement:

$\delta_{V0} = \delta_{V0\text{-Factor}} \cdot V$

$\delta_{V\infty} = \delta_{V\infty\text{-Factor}} \cdot V$

V = acting shear loading

Table C35.2: Displacements for fractional Upat IST

Upat IST		3/8"	1/2"	5/8"	3/4"
Displacement-Factors for tension loading [1)]					
Uncracked or cracked concrete; Temperature range I, II, III					
$\delta_{N0\text{-Factor}}$	[mm/(N/mm²)]	0,10	0,10	0,11	0,13
$\delta_{N\infty\text{-Factor}}$		0,15	0,16	0,17	0,19
Displacement-Factors for shear loading [2)]					
Uncracked or cracked concrete; Temperature range I, II, III					
$\delta_{V0\text{-Factor}}$	[mm/kN]	0,09	0,08	0,07	0,05
$\delta_{V\infty\text{-Factor}}$		0,14	0,12	0,10	0,08

[1)] Calculation of effective displacement:

$\delta_{N0} = \delta_{N0\text{-Factor}} \cdot \tau$

$\delta_{N\infty} = \delta_{N\infty\text{-Factor}} \cdot \tau$

τ = acting bond strength under tension loading

[2)] Calculation of effective displacement:

$\delta_{V0} = \delta_{V0\text{-Factor}} \cdot V$

$\delta_{V\infty} = \delta_{V\infty\text{-Factor}} \cdot V$

V = acting shear loading

Table C36.1: Displacements for fractional reinforcing bars

Rebar size		#3	#4	#5	#6	#7	#8	#9	#10
Displacement-Factors for tension loading [1)]									
Uncracked or cracked concrete; Temperature range I, II, III									
$\delta_{N0\text{-Factor}}$	[mm/(N/mm²)]	0,08	0,09	0,10	0,11	0,11	0,12	0,13	0,13
$\delta_{N\infty\text{-Factor}}$		0,12	0,13	0,15	0,16	0,17	0,18	0,19	0,20
Displacement-Factors for shear loading [2)]									
Uncracked or cracked concrete; Temperature range I, II, III									
$\delta_{V0\text{-Factor}}$	[mm/kN]	0,15	0,12	0,09	0,07	0,07	0,06	0,05	0,05
$\delta_{V\infty\text{-Factor}}$		0,22	0,18	0,14	0,11	0,10	0,09	0,08	0,07

[1)] Calculation of effective displacement:

$\delta_{N0} = \delta_{N0\text{-Factor}} \cdot \tau$

$\delta_{N\infty} = \delta_{N\infty\text{-Factor}} \cdot \tau$

τ = acting bond strength under tension loading

[2)] Calculation of effective displacement:

$\delta_{V0} = \delta_{V0\text{-Factor}} \cdot V$

$\delta_{V\infty} = \delta_{V\infty\text{-Factor}} \cdot V$

V = acting shear loading

Table C37.1: Characteristic resistance to steel failure under tension / shear loading for metric Anchor rods and Threaded rods under seismic action performance category C1

Anchor rod / Threaded rod				M10	M12	M14	M16	M20	M22	M24	M27	M30
Characteristic resistance to steel failure under tension loading [1)]												
Anchor rods and Threaded rods, performance category C1 [2)]												
Characteristic resistance $N_{Rk,s,C1}$	Steel zinc plated	Property class	4.8	23,2(21,4)	33,7	46,0	62,8	98,0	121,2	141,2	183,6	224,4
			5.8	29,0(26,8)	42,1	57,5	78,5	122,5	151,5	176,5	229,5	280,5
			8.8	46,4(42,8)	67,4	92,0	125,6	196,0	242,4	282,4	367,2	448,8
	Stainless steel R and high corrosion resistant steel HCR		50	29,0	42,1	57,5	78,5	122,5	151,5	176,5	229,5	280,5
			70	40,6	59,0	80,5	109,9	171,5	212,1	247,1	321,3	392,7
			80	46,4	67,4	92,0	125,6	196,0	242,4	282,4	367,2	448,8
		[kN]										
Characteristic resistance to steel failure under shear loading without lever arm [1)]												
Anchor rods, performance category C1 [2)]												
Characteristic resistance $V_{Rks,C1}$	Steel zinc plated	Property class	4.8	13,9(12,8)	20,2	27,6	37,6	58,8	72,7	84,7	110,1	134,6
			5.8	17,4(16,0)	25,2	34,5	47,1	73,5	90,9	105,9	137,7	168,3
			8.8	23,2(21,4)	33,7	46,0	62,8	98,0	121,2	141,2	183,6	224,4
	Stainless steel R and high corrosion resistant steel HCR		50	14,5	21,0	28,7	39,2	61,2	75,7	88,2	114,7	140,2
			70	20,3	29,5	40,2	54,9	85,7	106,0	123,5	160,6	196,3
			80	23,2	33,7	46,0	62,8	98,0	121,2	141,2	183,6	224,4
		[kN]										
Threaded rods, performance category C1 [2)]												
Characteristic resistance $V_{Rk,s,C1}$	Steel zinc plated	Property class	4.8	9,7(9,0)	14,1	19,3	26,3	41,1	50,9	59,3	77,1	97,2
			5.8	12,1(11,2)	17,7	24,1	32,9	51,4	63,6	74,1	96,3	117,8
			8.8	16,2(15,0)	23,6	32,2	43,9	68,6	84,8	98,8	128,5	157,0
	Stainless steel R and high corrosion resistant steel HCR		50	10,1	14,7	20,1	27,4	42,8	53,0	61,7	80,3	98,1
			70	14,2	20,6	28,1	38,4	60,0	74,2	86,4	112,4	137,4
			80	16,2	23,6	32,2	43,9	68,6	84,8	98,8	128,5	157,0
		[kN]										

[1)] Values in brackets are valid for undersized Threaded rods with smaller stress area A_s for hot dip galvanised Threaded rods according to EN ISO 10684:2004+AC:2009.

[2)] Partial factors for performance category C1 or C2 see table C39.1; for Anchor rods the factor for steel ductility is 1,0.

Table C38.1: Characteristic resistance to steel failure under tension / shear loading for metric Anchor rods and Threaded rods under seismic action performance category C2

Anchor rod / Threaded rod				M10	M12	M14	M16	M20	M22	M24	M27	M30
Characteristic resistance to steel failure under tension loading												
Anchor rods and Threaded rods, performance category C2 [1]												
Characteristic resistance $N_{Rk,s,C2}$	Steel zinc plated	Property class	4.8	-[2]	30,3	-[2]	56,5	88,2	-[2]	141,2	-[2]	-[2]
			5.8	-[2]	37,9	-[2]	70,6	110,2	-[2]	176,5	-[2]	-[2]
			8.8	-[2]	60,6	-[2]	113,0	176,4	-[2]	282,4	-[2]	-[2]
	Stainless steel R and high corrosion resistant steel HCR		50	-[2]	37,9	-[2]	70,6	110,2	-[2]	176,5	-[2]	-[2]
			70	-[2]	53,1	-[2]	98,9	154,3	-[2]	247,1	-[2]	-[2]
			80	-[2]	60,6	-[2]	113,0	176,4	-[2]	282,4	-[2]	-[2]
		[kN]										
Characteristic resistance to steel failure under shear loading without lever arm												
Anchor rods, performance category C2 [1]												
Characteristic resistance $V_{Rk,s,C2}$	Steel zinc plated	Property class	4.8	-[2]	13,3	-[2]	28,2	45,2	-[2]	77,0	-[2]	-[2]
			5.8	-[2]	16,6	-[2]	35,3	56,5	-[2]	96,3	-[2]	-[2]
			8.8	-[2]	22,2	-[2]	47,1	75,4	-[2]	128,4	-[2]	-[2]
	Stainless steel R and high corrosion resistant steel HCR		50	-[2]	13,9	-[2]	29,4	47,1	-[2]	80,3	-[2]	-[2]
			70	-[2]	19,4	-[2]	41,2	66,0	-[2]	112,4	-[2]	-[2]
			80	-[2]	22,2	-[2]	47,1	75,4	-[2]	128,4	-[2]	-[2]
		[kN]										
Threaded rods, performance category C2 [1]												
Characteristic resistance $V_{Rk,s,C2}$	Steel zinc plated	Property class	4.8	-[2]	13,3	-[2]	26,3	41,1	-[2]	59,3	-[2]	-[2]
			5.8	-[2]	16,6	-[2]	32,9	51,4	-[2]	74,1	-[2]	-[2]
			8.8	-[2]	22,2	-[2]	43,9	68,6	-[2]	98,8	-[2]	-[2]
	Stainless steel R and high corrosion resistant steel HCR		50	-[2]	13,9	-[2]	27,4	42,8	-[2]	61,7	-[2]	-[2]
			70	-[2]	19,4	-[2]	38,4	60,0	-[2]	86,4	-[2]	-[2]
			80	-[2]	22,2	-[2]	43,9	68,6	-[2]	98,8	-[2]	-[2]
		[kN]										

[1] Partial factors for performance category C1 or C2 see table C39.1; for Anchor rods the factor for steel ductility is 1,0.
[2] No performance assessed.

Table C38.2: Characteristic resistance to steel failure under tension / shear loading for metric reinforcing bars (B500B) under seismic action performance category C1

Nominal diameter of the bar		ϕ	10	12	14	16	18	20	22	24	25	26	28	30	32
Characteristic resistance to steel failure under tension loading															
Reinforcing bar B500B acc. to DIN 488-2:2009-08, performance category C1 [1]															
Characteristic resistance	$N_{Rk,s,C1}$	[kN]	42,3	61,0	83,1	108,5	137,1	169,5	205,2	244,0	265,1	286,2	332,6	381,2	434,1
Characteristic resistance to steel failure under shear loading, without lever arm															
Reinforcing bar B500B acc. to DIN 488-2:2009-08, performance category C1 [1]															
Characteristic resistance	$V_{Rk,s,C1}$	[kN]	14,8	21,3	29,1	37,9	48,0	59,3	71,8	85,4	92,7	100,1	116,4	133,4	151,9

[1] Partial factors for performance category C1 see table C39.1.

Upat Injection system UPM 55

Performance
Characteristic resistance to steel failure for metric Anchor rods / Threaded rods and reinforcing bars under seismic action performance category C2 and C1 respectively

Annex C38
Appendix 64 / 77

Table C39.1: Partial factors for metric Anchor rods, Threaded rods and reinforcing bars (B500B) under seismic action performance category C1 or C2

Anchor rod / Threaded rod				**M10 to M30**
Nominal diameter of the bar			**ϕ**	**10 to 32**
Tension loading, steel failure [1)]				
Partial factor $\gamma_{Ms,N}$	Steel zinc plated	Property class 4.8	[-]	1,50
		Property class 5.8		1,50
		Property class 8.8		1,50
	Stainless steel R and high corrosion resistant steel HCR	Property class 50		2,86
		Property class 70		1,87 / Anchor rod HCR: 1,50 [2)]
		Property class 80		1,60
	Reinforcing bar	B500B		1,40
Shear loading, steel failure [1)]				
Partial factor $\gamma_{Ms,V}$	Steel zinc plated	Property class 4.8	[-]	1,25
		Property class 5.8		1,25
		Property class 8.8		1,25
	Stainless steel R and high corrosion resistant steel HCR	Property class 50		2,38
		Property class 70		1,56 / Anchor rod HCR: 1,25 [2)]
		Property class 80		1,33
	Reinforcing bar	B500B		1,50

[1)] In absence of other national regulations.
[2)] Only admissible for high corrosion resistant steel HCR, with $f_{yk} / f_{uk} \geq 0,8$ and $A_s > 12$ % (e.g. Anchor rods).

Table C40.1: Characteristic resistance for **combined pull-out** and **concrete failure** for **metric Anchor rods** and **Threaded rods** in hammer drilled holes under seismic action performance category **C1**; **working life 50 years**

Anchor rod / Threaded rod				M10	M12	M14	M16	M20	M22	M24	M27	M30
Characteristic bond resistance, combined pull-out and concrete cone failure												
Hammer-drilling with standard drill bit or hollow drill bit (dry or wet concrete)												
Temperature range	I: 24 °C / 40 °C	$\tau_{Rk,C1}$	[N/mm²]	7,0	7,0	6,7	6,0	5,7	6,7	6,7	6,7	6,7
	II: 35 °C / 60 °C			7,0	7,0	6,7	6,0	5,7	6,7	6,7	6,7	6,7
	III: 50 °C / 72 °C			7,0	7,0	6,7	5,7	5,7	6,7	6,7	6,7	6,7
Hammer-drilling with standard drill bit or hollow drill bit (water filled hole)												
Temperature range	I: 24 °C / 40 °C	$\tau_{Rk,C1}$	[N/mm²]	7,5	7,5	6,5	5,7	5,7	5,7	5,7	5,7	5,7
	II: 35 °C / 60 °C			7,5	7,5	6,5	5,7	5,7	5,7	5,7	5,7	5,7
	III: 50 °C / 72 °C			6,8	6,8	6,5	5,7	5,7	5,7	5,7	5,7	5,7
Installation factors												
Tension loading												
Dry or wet concrete		γ_{inst}	[-]	1,0								
Water filled hole				1,2				1,4				

Table C40.2: Characteristic resistance for **combined pull-out** and **concrete failure** for **metric Anchor rods** and **Threaded rods** in hammer drilled holes under seismic action performance category **C1**; **working life 100 years**

Anchor rod / Threaded rod				M10	M12	M14	M16	M20	M22	M24	M27	M30
Characteristic bond resistance, combined pull-out and concrete cone failure												
Hammer-drilling with standard drill bit or hollow drill bit (dry or wet concrete)												
Temperature range	I: 24 °C / 40 °C	$\tau_{Rk,C1}$	[N/mm²]	5,5	5,3	5,8	4,6	4,6	5,4	5,3	5,1	5,0
	II: 35 °C / 60 °C			5,5	5,3	5,8	4,6	4,6	5,4	5,3	5,1	5,0
	III: 50 °C / 72 °C			5,5	5,3	5,5	4,3	4,3	5,0	5,0	4,8	4,8
Hammer-drilling with standard drill bit or hollow drill bit (water filled hole)												
Temperature range	I: 24 °C / 40 °C	$\tau_{Rk,C1}$	[N/mm²]	5,9	5,6	5,7	4,3	4,6	4,6	4,5	4,3	4,2
	II: 35 °C / 60 °C			5,9	5,6	5,7	4,3	4,6	4,6	4,5	4,3	4,2
	III: 50 °C / 72 °C			5,3	5,1	5,3	4,3	4,3	4,3	4,2	4,1	4,0
Installation factors												
Tension loading												
Dry or wet concrete		γ_{inst}	[-]	1,0								
Water filled hole				1,2				1,4				

Table C41.1: Characteristic resistance for **combined pull-out** and **concrete failure** for **metric reinforcing bars** in hammer drilled holes under seismic action performance category **C1**; **working life 50 years**

Nominal diameter of the bar		**ϕ**	**10**	**12**	**14**	**16**	**18**	**20**	**22**	**24**	**25**	**26**	**28**	**30**	**32**
Characteristic bond resistance, combined pull-out and concrete cone failure															
Hammer-drilling with standard drill bit or hollow drill bit (dry or wet concrete)															
Temperature range	I: 24 °C / 40 °C	$\tau_{Rk,C1}$ [N/mm²]	7,0	7,0	6,7	5,7	5,7	5,7	6,7	6,7	6,7	6,7	6,7	6,7	4,8
	II: 35 °C / 60 °C		7,0	7,0	6,7	5,7	5,7	5,7	6,7	6,7	6,7	6,7	6,7	6,7	4,8
	III: 50 °C / 72 °C		7,0	7,0	6,7	5,7	5,7	5,7	6,7	6,7	6,7	6,7	6,7	6,7	4,8
Hammer-drilling with standard drill bit or hollow drill bit (water filled hole)															
Temperature range	I: 24 °C / 40 °C	$\tau_{Rk,C1}$ [N/mm²]	7,5	6,5	6,5	5,7	5,7	5,7	5,7	5,7	5,7	5,7	5,7	5,7	4,8
	II: 35 °C / 60 °C		7,5	6,5	6,5	5,7	5,7	5,7	5,7	5,7	5,7	5,7	5,7	5,7	4,8
	III: 50 °C / 72 °C		6,5	6,5	5,8	5,8	5,7	5,7	5,7	5,7	5,7	5,7	5,7	5,7	4,8
Installation factors															
Tension loading															
Dry or wet concrete		γ_{inst} [-]	1,0												
Water filled hole			1,2					1,4							

Table C41.2: Characteristic resistance for **combined pull-out** and **concrete failure** for **metric reinforcing bars** in hammer drilled holes under seismic action performance category **C1**; **working life 100 years**

Nominal diameter of the bar		**ϕ**	**10**	**12**	**14**	**16**	**18**	**20**	**22**	**24**	**25**	**26**	**28**	**30**	**32**
Characteristic bond resistance, combined pull-out and concrete cone failure															
Hammer-drilling with standard drill bit or hollow drill bit (dry or wet concrete)															
Temperature range	I: 24 °C / 40 °C	$\tau_{Rk,C1}$ [N/mm²]	6,0	5,6	4,4	3,7	3,7	3,7	4,4	4,4	4,4	4,4	4,4	4,4	3,1
	II: 35 °C / 60 °C		6,0	5,6	4,4	3,7	3,7	3,7	4,4	4,4	4,4	4,4	4,4	4,4	3,1
	III: 50 °C / 72 °C		6,0	5,6	4,4	3,7	3,7	3,7	4,4	4,4	4,4	4,4	4,4	4,4	3,1
Hammer-drilling with standard drill bit or hollow drill bit (water filled hole)															
Temperature range	I: 24 °C / 40 °C	$\tau_{Rk,C1}$ [N/mm²]	6,4	5,2	4,2	3,7	3,7	3,7	3,7	3,7	3,7	3,7	3,7	3,7	3,1
	II: 35 °C / 60 °C		6,4	5,2	4,2	3,7	3,7	3,7	3,7	3,7	3,7	3,7	3,7	3,7	3,1
	III: 50 °C / 72 °C		5,5	5,2	3,8	3,8	3,7	3,7	3,7	3,7	3,7	3,7	3,7	3,7	3,1
Installation factors															
Tension loading															
Dry or wet concrete		γ_{inst} [-]	1,0												
Water filled hole			1,2					1,4							

Table C42.1: Characteristic **resistance** and **displacements** for **combined pull-out** and **concrete failure** for **metric Anchor rods** and **Threaded rods** in hammer drilled holes under seismic action performance category **C2**; **working life 50 and 100 years**

Anchor rod / Threaded rod				**M12**	**M16**	**M20**	**M24**
Characteristic bond resistance, combined pull-out and concrete cone failure							
Hammer-drilling with standard drill bit or hollow drill bit (dry or wet concrete)							
Temperature range	I: 24 °C / 40 °C	$\tau_{Rk,C2}$	[N/mm²]	3,5	5,8	5,0	3,1
	II: 35 °C / 60 °C			3,5	5,8	5,0	3,1
	III: 50 °C / 72 °C			3,3	5,5	4,7	2,9
Hammer-drilling with standard drill bit or hollow drill bit (water filled hole)							
Temperature range	I: 24 °C / 40 °C	$\tau_{Rk,C2}$	[N/mm²]	3,5	5,8	5,0	3,1
	II: 35 °C / 60 °C			3,5	5,8	5,0	3,1
	III: 50 °C / 72 °C			3,3	5,5	4,7	2,9
Installation factors							
Tension loading							
Dry or wet concrete		γ_{inst}	[-]	1,0			
Water filled hole				1,2		1,4	
Displacement-Factors for tension loading [1]							
$\delta_{N,C2(50\%)}$-Factor		[mm/(N/mm²)]		0,09	0,10	0,11	0,12
$\delta_{N,C2(100\%)}$-Factor				0,15	0,17	0,17	0,18
Displacement-Factors for shear loading [2]							
$\delta_{V,C2(50\%)}$-Factor		[mm/kN]		0,18	0,10	0,07	0,06
$\delta_{V,C2(100\%)}$-Factor				0,25	0,14	0,11	0,09

[1] Calculation of effective displacement:

$\delta_{N,C2(50\%)} = \delta_{N,C2(50\%)\text{-Factor}} \cdot \tau$

$\delta_{N,C2(100\%)} = \delta_{N,C2(100\%)\text{-Factor}} \cdot \tau$

τ = acting bond strength under tension loading

[2] Calculation of effective displacement:

$\delta_{V,C2(50\%)} = \delta_{V,C2(50\%)\text{-Factor}} \cdot V$

$\delta_{V,C2(100\%)} = \delta_{V,C2(100\%)\text{-Factor}} \cdot V$

V = acting shear loading

Table C43.1: Characteristic resistance to steel failure under tension or shear loading for fractional Threaded rods under seismic action performance category C1

Threaded rod				3/8"	1/2"	5/8"	3/4"	7/8"	1"	1 1/8"
Characteristic resistance to steel failure under tension loading										
Threaded rods, performance category C1 [1]										
Characteristic resistance $N_{Rk,s,C1}$	Steel zinc plated	Property class	F568M, Class 5.8	[kN]	25,0	45,7	72,9	107,9	148,9	195,4	246,0
			F1554, Grade 36		19,9	36,5	58,3	86,2	119,1	156,2	196,7
			F1554, Grade 55		25,8	47,3	75,3	111,5	154,0	202,0	254,4
			F1554, Grade 105		43,0	78,8	125,6	185,9	256,7	336,8	424,0
			A193, B7		43,0	78,8	125,6	185,9	256,7	336,8	424,0
			F593, Alloy Group 2		34,4	63,0	100,5	126,4	174,5	229,0	288,3
	Stainless steel R		A193, Grade B8M, Class 1		25,8	47,3	75,3	111,5	154,0	202,0	254,4
			A193, Grade B8M, Class 2B		32,7	59,9	95,4	141,3	195,1	255,9	322,2
Characteristic resistance to steel failure under shear loading without lever arm										
Threaded rods, performance category C1 [1]										
Characteristic resistance $V_{Rks,C1}$	Steel zinc plated	Property class	F568M, Class 5.8	[kN]	12,0	21,9	34,9	51,7	53,6	70,3	88,5
			F1554, Grade 36		8,3	15,3	24,4	36,2	50,0	65,6	82,6
			F1554, Grade 55		10,3	18,9	30,1	44,6	46,2	60,6	76,3
			F1554, Grade 105		15,0	27,6	43,9	65,0	89,8	117,8	148,4
			A193, B7		17,2	31,5	50,2	74,3	77,0	101,0	127,2
			F593, Alloy Group 2		13,7	25,2	40,2	50,5	52,3	68,7	86,5
	Stainless steel R		A193, Grade B8M, Class 1		10,3	18,9	30,1	44,6	46,2	60,6	76,3
			A193, Grade B8M, Class 2B		13,1	23,9	38,1	56,5	58,5	76,7	96,6

[1] Partial factors for performance category C1 or see table C45.1

Table C44.1: Characteristic resistance to **steel failure** under tension / shear loading for **fractional reinforcing bars** under seismic action performance category **C1**

Rebar size			**#3**	**#4**	**#5**	**#6**	**#7**	**#8**	**#9**	**#10**
Characteristic resistance to steel failure under tension loading										
Reinforcing bar materials, performance category C1 [1)]										
Characteristic resistance $N_{Rk,s,C1}$	A615 (A767), Grade 40	[kN]	29,3	53,3	82,3	117,4	160,0	210,9	266,8	338,8
	A615 (A767), Grade 60		44,0	80,0	123,4	176,2	240,1	316,4	400,2	508,2
	A615 (A767), Grade 75		48,9	88,9	137,2	195,8	266,8	351,6	444,7	564,6
	A706 (A767), Grade 60		39,1	71,1	109,7	156,6	213,4	281,3	355,7	451,7
Characteristic resistance to steel failure under shear loading, without lever arm										
Reinforcing bar materials, performance category C1 [1)]										
Characteristic Resistance $V_{Rk,s,C1}$	A615 (A767), Grade 40	[kN]	13,0	23,6	36,5	52,1	71,0	93,6	118,4	150,4
	A615 (A767), Grade 60		16,3	29,6	45,6	65,2	88,8	117,0	148,0	188,0
	A615 (A767), Grade 75		18,1	32,9	50,7	72,4	98,7	130,1	164,5	208,9
	A706 (A767), Grade 60		14,4	26,3	40,6	57,9	78,9	104,0	131,6	167,1

[1)] Partial factors for performance category C1 see table C45.1.

Table C45.1: Partial factors for **fractional Threaded rods** and **reinforcing bars** under seismic action performance category **C1**

Threaded rod				**3/8" to 5/8"**	**3/4" to 1 1/8"**
Rebar size				**#3 to #10**	
Tension loading, steel failure [1)]					
Partial factor $\gamma_{Ms,N}$	Threaded rod, zinc plated	F568M, Class 5.8	[-]	1,50	
		F1554, Grade 36		1,94	
		F1554, Grade 55		1,64	
		F1554, Grade 105		1,43	
		A193, B7		1,43	
	Threaded rod, stainless steel R	F593, Alloy Group 2		1,85	2,27
		A193, Grade B8M, Class 1		3,00	
		A193, Grade B8M, Class 2B		1,52	
	Reinforcing bar	A615 (A767), Grade 40		1,80	
		A615 (A767), Grade 60		1,80	
		A615 (A767), Grade 75		1,60	
		A706 (A767), Grade 60		1,60	
Shear loading, steel failure [1)]					
Partial factor $\gamma_{Ms,V}$	Threaded rod, zinc plated	F568M, Class 5.8	[-]	1,25	
		F1554, Grade 36		1,61	
		F1554, Grade 55		1,36	
		F1554, Grade 105		1,50	
		A193, B7		1,50	
	Threaded rod, stainless steel R	F593, Alloy Group 2		1,54	1,89
		A193, Grade B8M, Class 1		2,50	
		A193, Grade B8M, Class 2B		1,27	
	Reinforcing bar	A615 (A767), Grade 40		1,50	
		A615 (A767), Grade 60		1,50	
		A615 (A767), Grade 75		1,33	
		A706 (A767), Grade 60		1,33	

[1)] In absence of other national regulations.

Table C46.1: Characteristic resistance for **combined pull-out** and **concrete failure** for **fractional Threaded rods** in hammer drilled holes under seismic action performance category **C1**; **working life 50 years**

Threaded rod				**3/8"**	**1/2"**	**5/8"**	**3/4"**	**7/8"**	**1"**	**1 1/8"**
Characteristic bond resistance, combined pull-out and concrete cone failure										
Hammer-drilling with standard drill bit or hollow drill bit (dry or wet concrete)										
Temperature range	I: 24 °C / 40 °C	$\tau_{Rk,C1}$	[N/mm²]	8,5	9,0	9,1	8,5	8,5	8,2	7,1
	II: 35 °C / 60 °C			8,5	9,0	9,1	8,5	8,5	8,2	7,1
	III: 50 °C / 72 °C			8,0	8,5	8,5	8,5	8,5	8,2	7,1
Hammer-drilling with standard drill bit or hollow drill bit (water filled hole)										
Temperature range	I: 24 °C / 40 °C	$\tau_{Rk,C1}$	[N/mm²]	7,4	7,7	7,5	6,0	6,0	5,8	5,0
	II: 35 °C / 60 °C			7,4	7,7	7,5	6,0	6,0	5,8	5,0
	III: 50 °C / 72 °C			6,9	7,3	7,0	6,0	6,0	5,8	5,0
Installation factors										
Tension loading										
Dry or wet concrete		γ_{inst}	[-]	1,0						
Water filled hole				1,2			1,4			

Table C46.2: Characteristic resistance for **combined pull-out** and **concrete failure** for **fractional Threaded rods** in hammer drilled holes under seismic action performance category **C1**; **working life 100 years**

Threaded rod				**3/8"**	**1/2"**	**5/8"**	**3/4"**	**7/8"**	**1"**	**1 1/8"**
Characteristic bond resistance, combined pull-out and concrete cone failure										
Hammer-drilling with standard drill bit or hollow drill bit (dry or wet concrete)										
Temperature range	I: 24 °C / 40 °C	$\tau_{Rk,C1}$	[N/mm²]	6,8	6,8	6,9	6,9	6,8	6,3	5,3
	II: 35 °C / 60 °C			6,8	6,8	6,9	6,9	6,8	6,3	5,3
	III: 50 °C / 72 °C			6,4	6,4	6,5	6,4	6,4	5,9	5,1
Hammer-drilling with standard drill bit or hollow drill bit (water filled hole)										
Temperature range	I: 24 °C / 40 °C	$\tau_{Rk,C1}$	[N/mm²]	5,9	5,9	5,7	4,9	4,8	4,4	3,7
	II: 35 °C / 60 °C			5,9	5,9	5,7	4,9	4,8	4,4	3,7
	III: 50 °C / 72 °C			5,5	5,5	5,3	4,5	4,5	4,2	3,6
Installation factors										
Tension loading										
Dry or wet concrete		γ_{inst}	[-]	1,0						
Water filled hole				1,2			1,4			

Table C47.1: Characteristic resistance for combined pull-out and concrete failure for fractional reinforcing bars in hammer drilled holes under seismic action performance category C1; working life 50 years

Rebar size				#3	#4	#5	#6	#7	#8	#9	#10[1)]
Characteristic bond resistance, combined pull-out and concrete cone failure											
Hammer-drilling with standard drill bit or hollow drill bit (dry or wet concrete)											
Temperature range	I: 24 °C / 40 °C	$\tau_{Rk,C1}$	[N/mm²]	6,2	7,0	7,0	7,0	7,0	7,0	7,0	7,0
	II: 35 °C / 60 °C			6,2	7,0	7,0	7,0	7,0	7,0	7,0	7,0
	III: 50 °C / 72 °C			6,2	7,0	7,0	7,0	7,0	7,0	7,0	7,0
Hammer-drilling with standard drill bit or hollow drill bit (water filled hole)											
Temperature range	I: 24 °C / 40 °C	$\tau_{Rk,C1}$	[N/mm²]	6,6	5,7	5,7	5,3	5,3	5,3	5,3	4,4
	II: 35 °C / 60 °C			6,6	5,7	5,7	5,3	5,3	5,3	5,3	4,4
	III: 50 °C / 72 °C			5,7	5,7	5,3	5,3	5,3	5,3	5,3	4,4
Installation factors											
Tension loading											
Dry or wet concrete		γ_{inst}	[-]	1,0							
Water filled hole				1,2			1,4				

[1)] Not allowed for drilling with hollow drill bit.

Table C47.2: Characteristic resistance for combined pull-out and concrete failure for fractional reinforcing bars in hammer drilled holes under seismic action performance category C1; working life 100 years

Rebar size				#3	#4	#5	#6	#7	#8	#9	#10[1)]
Characteristic bond resistance, combined pull-out and concrete cone failure											
Hammer-drilling with standard drill bit or hollow drill bit (dry or wet concrete)											
Temperature range	I: 24 °C / 40 °C	$\tau_{Rk,C1}$	[N/mm²]	5,2	5,6	4,6	4,6	4,6	4,6	4,6	4,6
	II: 35 °C / 60 °C			5,2	5,6	4,6	4,6	4,6	4,6	4,6	4,6
	III: 50 °C / 72 °C			5,2	5,6	4,6	4,6	4,6	4,6	4,6	4,6
Hammer-drilling with standard drill bit or hollow drill bit (water filled hole)											
Temperature range	I: 24 °C / 40 °C	$\tau_{Rk,C1}$	[N/mm²]	5,6	4,6	3,7	3,4	3,4	3,4	3,4	2,9
	II: 35 °C / 60 °C			5,6	4,6	3,7	3,4	3,4	3,4	3,4	2,9
	III: 50 °C / 72 °C			4,9	4,6	3,4	3,4	3,4	3,4	3,4	2,9
Installation factors											
Tension loading											
Dry or wet concrete		γ_{inst}	[-]	1,0							
Water filled hole				1,2			1,4				

[1)] Not allowed for drilling with hollow drill bit.

Table C48.1: Fire resistance to steel failure under tension and shear loading for metric Anchor rods and Threaded rods part 1

Fire resistance to steel failure under tension and shear loading

Anchor rod / Threaded rod ISO 898-1 Class 5.8 and higher	R30			R60		
	$N_{Rk,s,fi,30}$ [kN]	$V_{Rk,s,fi,30}$ [kN]	$M^0_{Rk,s,fi,30}$ [Nm]	$N_{Rk,s,fi,60}$ [kN]	$V_{Rk,s,fi,60}$ [kN]	$M^0_{Rk,s,fi,60}$ [Nm]
M8	1,6	1,6	1,7	1,2	1,2	1,2
M10	3,3	3,3	4,2	2,3	2,3	3,0
M12	5,8	5,8	9,1	4,0	4,0	6,2
M14	6,6	6,6	12,0	4,6	4,6	8,4
M16	10,9	10,9	15,1	7,5	7,5	11,2
M20	11,1	11,1	29,4	8,2	8,2	21,8
M22	13,7	13,7	40,5	10,1	10,1	30,0
M24	16,0	16,0	50,9	11,8	11,8	37,7
M27	20,8	20,8	75,5	15,4	15,4	56,0
M30	25,4	25,4	102,0	18,8	18,8	75,6
Anchor rod / Threaded rod ISO 898-1 Class 5.8 and higher	**R90**			**R120**		
	$N_{Rk,s,fi,90}$ [kN]	$V_{Rk,s,fi,90}$ [kN]	$M^0_{Rk,s,fi,90}$ [Nm]	$N_{Rk,s,fi,120}$ [kN]	$V_{Rk,s,fi,120}$ [kN]	$M^0_{Rk,s,fi,120}$ [Nm]
M8	0,8	0,8	0,8	0,6	0,6	0,6
M10	1,4	1,4	1,8	0,9	0,9	1,1
M12	2,1	2,1	3,3	1,2	1,2	1,9
M14	2,7	2,7	4,9	1,7	1,7	3,2
M16	4,0	4,0	7,3	2,3	2,3	5,3
M20	5,3	5,3	14,2	3,9	3,9	10,4
M22	6,6	6,6	19,5	4,8	4,8	14,3
M24	7,7	7,7	24,6	5,6	5,6	18,0
M27	10,0	10,0	36,4	7,3	7,3	26,7
M30	12,3	12,3	49,3	9,0	9,0	36,1

Table C49.1: Fire resistance to steel failure under tension and shear loading for metric Anchor rods and Threaded rods part 2

Anchor rods R and HCR and Threaded rod, EN ISO 3506-1 Class A4-50 and higher	R30			R60		
	$N_{Rk,s,fi,30}$ [kN]	$V_{Rk,s,fi,30}$ [kN]	$M^0_{Rk,s,fi,30}$ [Nm]	$N_{Rk,s,fi,60}$ [kN]	$V_{Rk,s,fi,60}$ [kN]	$M^0_{Rk,s,fi,60}$ [Nm]
M8	0,7	0,7	0,7	0,5	0,5	0,6
M10	1,4	1,4	1,8	1,1	1,1	1,5
M12	2,5	2,5	3,9	2,1	2,1	3,9
M14	3,4	3,4	6,2	2,8	2,8	6,2
M16	4,7	4,7	9,9	3,9	3,9	9,9
M20	7,3	7,3	19,4	6,1	6,1	19,4
M22	9,0	9,0	26,7	7,5	7,5	26,7
M24	10,5	10,5	33,6	8,8	8,8	28,0
M27	13,7	13,7	49,9	11,4	11,4	41,6
M30	16,8	16,8	67,4	14,0	14,0	56,2
Anchor rods R and HCR and Threaded rod, EN ISO 3506-1 Class A4-50 and higher	**R90**			**R120**		
	$N_{Rk,s,fi,90}$ [kN]	$V_{Rk,s,fi,90}$ [kN]	$M^0_{Rk,s,fi,90}$ [Nm]	$N_{Rk,s,fi,120}$ [kN]	$V_{Rk,s,fi,120}$ [kN]	$M^0_{Rk,s,fi,120}$ [Nm]
M8	0,4	0,4	0,4	0,3	0,3	0,3
M10	0,9	0,9	1,2	0,8	0,8	1,0
M12	1,6	1,6	3,9	1,3	1,3	3,9
M14	2,3	2,3	6,2	1,8	1,8	6,2
M16	3,1	3,1	9,9	2,5	2,5	9,9
M20	4,9	4,9	19,4	3,9	3,9	19,4
M22	6,0	6,0	26,7	4,8	4,8	26,7
M24	7,0	7,0	22,4	5,6	5,6	17,9
M27	9,1	9,1	33,2	7,3	7,3	26,6
M30	11,2	11,2	44,9	8,9	8,9	35,9

Table C50.1: Fire resistance to steel failure under tension and shear loading for fractional Threaded rods

Fire resistance to steel failure under tension and shear loading

Threaded rod	**R30**			**R60**		
Steel zinc plated; detailed materials see Table A7.1, part No 2 [1)]	$N_{Rk,s,fi,30}$ [kN]	$V_{Rk,s,fi,30}$ [kN]	$M^0_{Rk,s,fi,30}$ [Nm]	$N_{Rk,s,fi,60}$ [kN]	$V_{Rk,s,fi,60}$ [kN]	$M^0_{Rk,s,fi,60}$ [Nm]
3/8"	2,7	2,7	3,2	1,9	1,9	2,3
1/2"	5,9	5,9	9,6	4,1	4,1	6,7
5/8"	6,7	6,7	13,7	4,9	4,9	10,1
3/4"	9,7	9,7	24,3	7,2	7,2	18,0
7/8"	13,5	13,5	39,4	10,0	10,0	29,2
1"	17,7	17,7	59,3	13,1	13,1	43,9
1 1/8"	22,3	22,3	83,8	16,5	16,5	62,2
Threaded rod	**R90**			**R120**		
Steel zinc plated; detailed materials see Table A7.1, part No 2 [1)]	$N_{Rk,s,fi,90}$ [kN]	$V_{Rk,s,fi,90}$ [kN]	$M^0_{Rk,s,fi,90}$ [Nm]	$N_{Rk,s,fi,120}$ [kN]	$V_{Rk,s,fi,120}$ [kN]	$M^0_{Rk,s,fi,120}$ [Nm]
3/8"	1,1	1,1	1,4	0,8	0,8	0,9
1/2"	2,3	2,3	3,7	1,3	1,3	2,2
5/8"	3,6	3,6	7,5	2,2	2,2	4,5
3/4"	4,7	4,7	11,7	3,4	3,4	8,6
7/8"	6,5	6,5	19,0	4,7	4,7	13,9
1"	8,5	8,5	28,6	6,2	6,2	20,9
1 1/8"	10,7	10,7	40,5	7,9	7,9	29,6
Threaded rod	**R30**			**R60**		
Stainless steel R; detailed materials see Table A7.1, part No 2	$N_{Rk,s,fi,30}$ [kN]	$V_{Rk,s,fi,30}$ [kN]	$M^0_{Rk,s,fi,30}$ [Nm]	$N_{Rk,s,fi,60}$ [kN]	$V_{Rk,s,fi,60}$ [kN]	$M^0_{Rk,s,fi,60}$ [Nm]
3/8"	1,1	1,1	1,4	0,9	0,9	1,1
1/2"	2,7	2,7	4,4	2,2	2,2	3,7
5/8"	4,3	4,3	8,9	3,6	3,6	7,4
3/4"	6,4	6,4	16,1	5,4	5,4	13,4
7/8"	8,9	8,9	26,1	7,4	7,4	21,7
1"	11,7	11,7	39,2	9,7	9,7	32,6
1 1/8"	14,7	14,7	55,4	12,3	12,3	46,2
Threaded rod	**R90**			**R120**		
Stainless steel R; detailed materials see Table A7.1, part No 2	$N_{Rk,s,fi,90}$ [kN]	$V_{Rk,s,fi,90}$ [kN]	$M^0_{Rk,s,fi,90}$ [Nm]	$N_{Rk,s,fi,120}$ [kN]	$V_{Rk,s,fi,120}$ [kN]	$M^0_{Rk,s,fi,120}$ [Nm]
3/8"	0,7	0,7	0,9	0,6	0,6	0,7
1/2"	1,8	1,8	2,9	1,4	1,4	2,3
5/8"	2,9	2,9	5,9	2,3	2,3	4,7
3/4"	4,3	4,3	10,7	3,4	3,4	8,5
7/8"	5,9	5,9	17,4	4,7	4,7	13,9
1"	7,8	7,8	26,1	6,2	6,2	20,9
1 1/8"	9,8	9,8	36,9	7,8	7,8	29,5

[1)] No performance assessed for ASTM F1554 Grade 36.

Characteristic bond resistance for cracked concrete under fire conditions for metric and fractional Anchor rods and Threaded rods in hammer drilled holes with standard drill bit or hollow drill bit

The characteristic bond resistance for cracked concrete under fire conditions for a given temperature.

$\tau_{Rk,fi}(\theta)$ has to be calculated by the following equation:

$$\tau_{Rk,fi}(\theta) = k_{fi,p}(\theta) \cdot \tau_{Rk,cr,C20/25}$$

θ	=	Temperature in °C in the mortar layer,
$\tau_{Rk,fi}(\theta)$	=	Characteristic bond resistance for cracked concrete under fire exposure for a given temperature in N/mm² for concrete classes C20/25 to C50/60.
$k_{fi,p}(\theta)$	=	Reduction factor under fire conditions.
$\tau_{Rk,cr,C20/25}$	=	Characteristic bond resistance for cracked concrete C20/25 in N/mm², given in Table C5.1, Table C6.1, Table C26.1 or Table C28.1, respectively.

Anchor rods or Threaded rods	If: θ > 21 °C	$\mathbf{k_{fi,p}(\theta) = 26,71 \cdot \theta^{-1,166}} \leq 1,0$	see Figure C51.1
	If: $\theta > \theta_{max}$ = 284 °C	$\mathbf{k_{fi,p}(\theta) = 0}$	

Figure C51.1: Graph of reduction factor $k_{fi,p}(\theta)$ for Anchor rods or Threaded rods.

