Einfach. Sicher.

DÉCLARATION DES PERFORMANCES

DoP 0408

pour le système d'injection fischer UPM 44 (résine pour les scellements d'armatures rapportées) FR

1. Code d'identification unique du type de produit: **DoP 0408**

2. Usage(s) prévu(s): **Système pour les scellements d'armatures rapportées pour utilisation dans le béton Voir annexes, en particulier les annexes B1-B11.**

3. Fabricant: **Upat Vertriebs GmbH, Bebelstraße 11, 79108 Freiburg im Breisgau, Allemagne**

4. Mandataire: **–**

5. Système(s) d'évaluation et de vérification de la constance des performances: **1**

6. Document d'évaluation européen: **EAD 330087-01-0601 Edition 06/2021**
   Evaluation Technique Européenne: **ETA-10/0388; 2025-11-20**
   Organisme d'évaluation technique: **DIBt- Deutsches Institut für Bautechnik**
   Organisme(s) notifié(s): **2873 TU Darmstadt**

7. Performance(s) déclarée(s):

Résistance mécanique et stabilité (BWR 1)

Résistance caractéristique sous charge statique et quasi statique:
Résistance d'adhérence des armatures rapportées: Annexe C1
Facteur de réduction: Annexe C1
Facteur d'augmentation profondeur d'ancrage minimum: Annexe C1
Résistance caractéristique à la rupture de l'acier sous charge de traction du fer à béton: Annexe C2

Résistance caractéristique sous charge sismique:
Contrainte d'adhérence et coefficient de réduction sous charge sismique: - NPD
Enrobage minimum sous charge sismique: - NPD

Sécurité en cas d'incendie (BWR 2)
Réaction au feu: Classe (A1)

Résistance au feu:
Contrainte ultime d'adhérence sous exposition au feu pour les scellements d'armatures rapportées évalués pour 50 ans: Annexe C3
Contrainte ultime d'adhérence sous exposition au feu pour les scellements d'armatures rapportées évalués pour 100 ans: Annexe C3
Résistance caractéristique à la rupture de l'acier sous charge de traction du fer à béton sous exposition au feu: Annexe C2

8. Documentation technique appropriée et/ou documentation technique spécifique: **–**

Les performances du produit identifié ci-dessus sont conformes aux performances déclarées. Conformément au règlement (UE) no 305/2011, la présente déclaration des performances est établie sous la seule responsabilité du fabricant mentionné ci-dessus.

Signé pour le fabricant et en son nom par:

i.V.

Dr.Christian Weber, Responsable du Développement

Dieter Pfaff, Chef de la Fédération Internationale de Production et Gestion de la Qualité

Tumlingen, 2026-07-01

Cette DoP a été préparée en plusieurs langues. En cas de différend relatif à l'interprétation, la version anglaise prévaudra.
L'annexe comprend des informations volontaires et complémentaires en langue anglaise dépassant les exigences légales (spécifiées de manière neutre).

Specific Part

1 Technical description of the product

The subject of this European Technical Assessment is the post-installed connection, by anchoring or overlap connection joint, of reinforcing bars (rebars) in existing structures made of normal weight concrete, using the "Rebar connection with injection system UPM 44" in accordance with the regulations for reinforced concrete construction.
Reinforcing bars made of steel with a diameter ϕ from 8 to 28 mm or the UPAT rebar anchor FRA with sizes M12 to M24 according to Annex A and injection mortar UPM 44 or UPM 44 Relax are used for rebar connections. The rebar is placed into a drilled hole filled with injection mortar and is anchored via the bond between rebar, injection mortar and concrete.

The product description is given in Annex A.

2 Specification of the intended use in accordance with the applicable European assessment Document

The performances given in Section 3 are only valid if the rebar connection is used in compliance with the specifications and conditions given in Annex B.

The verifications and assessment methods on which this European Technical Assessment is based lead to the assumption of a working life of the rebar connections of at least 50 years. The indications given on the working life cannot be interpreted as a guarantee given by the producer, but are to be regarded only as a means for choosing the right products in relation to the expected economically reasonable working life of the works.

3 Performance of the product and references to the methods used for its assessment

3.1 Mechanical resistance and stability (BWR 1)

Essential characteristic	Performance
Characteristic resistance under static and quasi-static loading	See Annex B5, C1 and C2
Characteristic resistance under seismic loading	No performance assessed

3.2 Safety in case of fire (BWR 2)

Essential characteristic	Performance
Reaction to fire	Class A1
Resistance to fire	See Annex C2 and C3

4 Assessment and verification of constancy of performance (AVCP) system applied, with reference to its legal base

In accordance with European Assessment Document EAD No. 330087-01-0601, the applicable European legal act is: [96/582/EC].

The system to be applied is: 1

Installation conditions and application examples reinforcing bars, part 1

Figure A1.1:

Overlap joint with existing reinforcement for rebar connections of slabs and beams

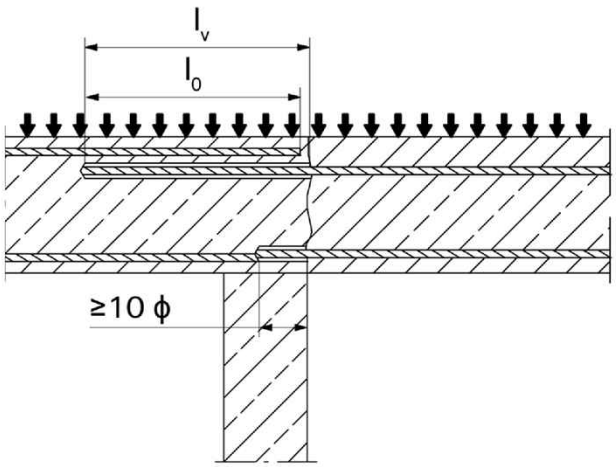

Figure A1.2:

Overlap joint with existing reinforcement at a foundation of a column or wall where the rebars are stressed

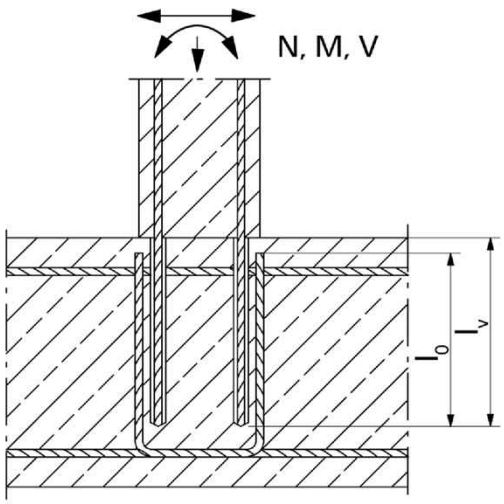

Figure A1.3:

End anchoring of slabs or beams (e.g. designed as simply supported)

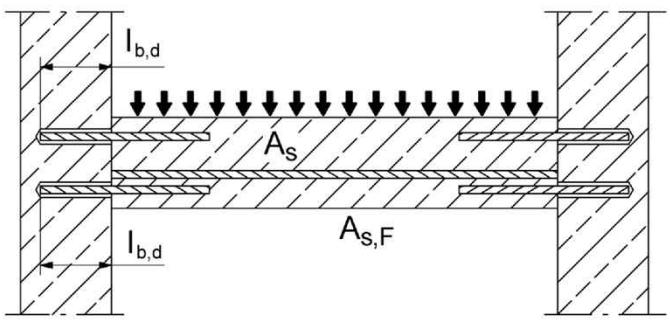

Figures not to scale

Installation conditions and application examples reinforcing bars, part 2

Figure A2.1:

Rebar connection for stressed primarily in compression

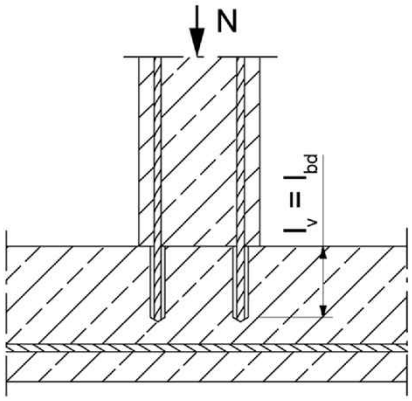

Figure A2.2:

Anchoring of reinforcement to cover the enveloped line of acting tensile force in the bending member

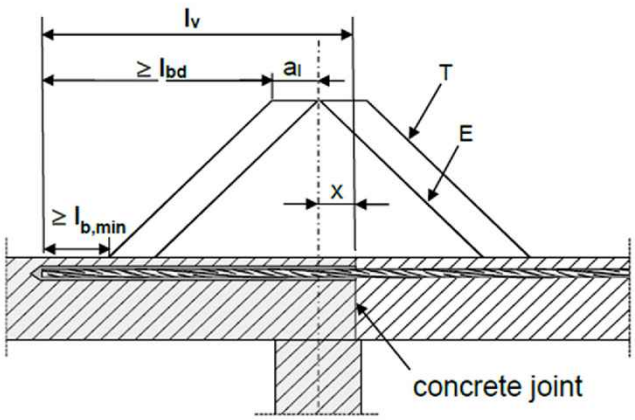

(only post-installed rebar is plotted)

Key to Figure

T Acting tensile force

E Envelope of $M_{ed} / z + N_{ed}$ (see EN 1992-1-1:2011)

x Distance between the theoretical point of support and concrete joint

Note to **figure A1.1** to **A1.3** and **figure A2.1** to **A2.2**

In the figures no traverse reinforcement is plotted, the transverse reinforcement as required by EN 1992-1-1:2011 shall be present.

The shear transfer between old and new concrete shall be designed according to EN 1992-1-1:2011. Preparation of joints according to **Annex B3** of this document

Figures not to scale

Figure A3.1:

Lap to a foundation of a column under bending.

1. Shear lug (or fastener loaded in shear)
2. UPAT rebar anchor FRA (tension only)
3. Existing stirrup / reinforcement for overlap (lap splice)
4. Slotted hole

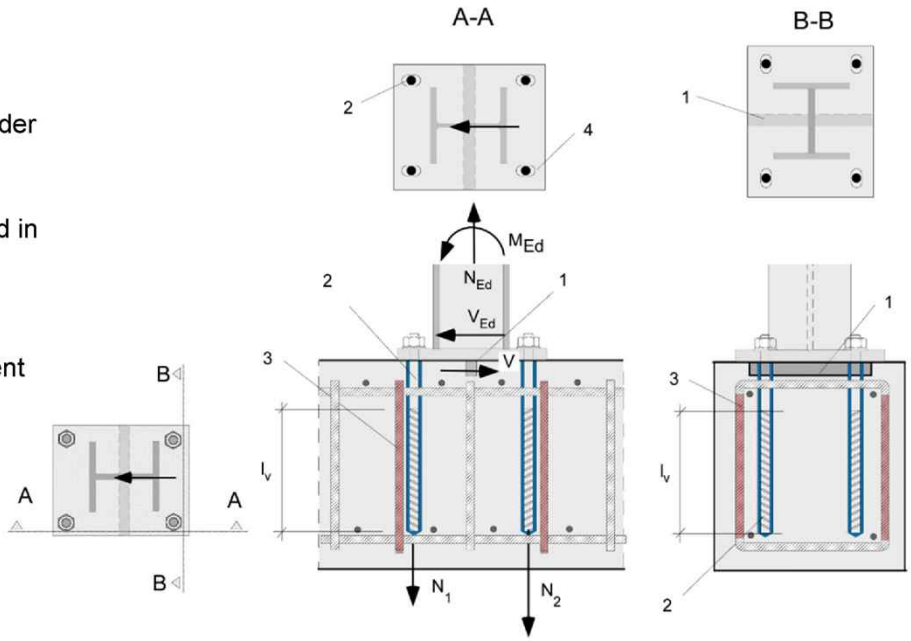

Figure A3.2:

Lap of the anchoring of guardrail posts or anchoring of cantilevered building components.
In the anchor plate, the drill holes for the UPAT rebar anchors FRA have to be designed as slotted holes with axial direction to the shear force.

1. Fastener for shear load transfer
2. UPAT rebar anchor FRA (tension only)
3. Existing stirrup / reinforcement for overlap (lap splice)
4. Slotted hole

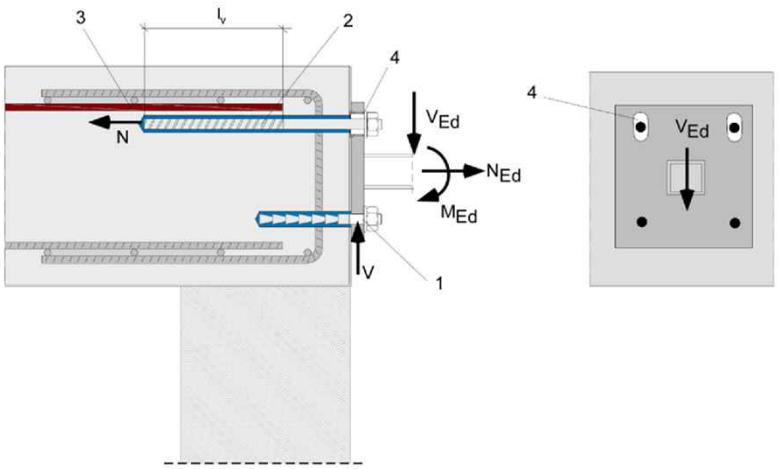

The required transverse reinforcement acc. to EN 1992-1-1:2011 is not shown in the figures. **The UPAT rebar anchor FRA may be only used for axial tensile force.** The tensile force must be transferred by lap to the existing reinforcement of the building. The transfer of the shear force has to be ensured by suitable measure, e.g. by means of shear force or anchors with European Technical Assessment (ETA).

Figures not to scale

Overview system components

Injection cartridge (shuttle cartridge) with sealing cap; Sizes: 360 ml, 825 ml

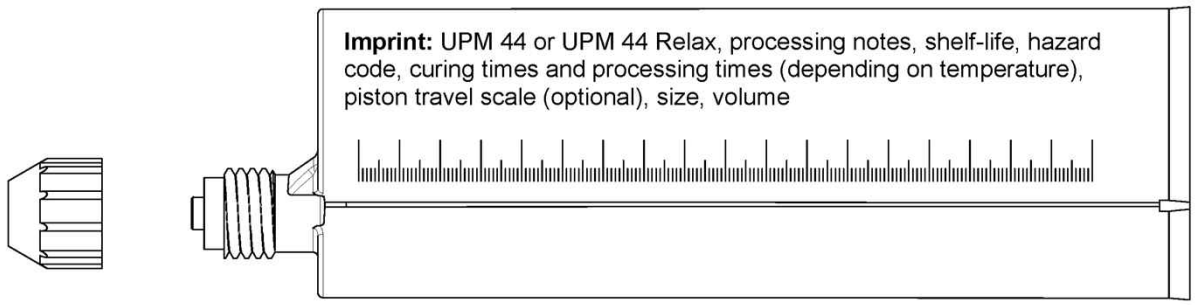

Injection cartridge (coaxial cartridge) with sealing cap; Sizes: 300 ml, 380 ml, 400 ml, 410 ml

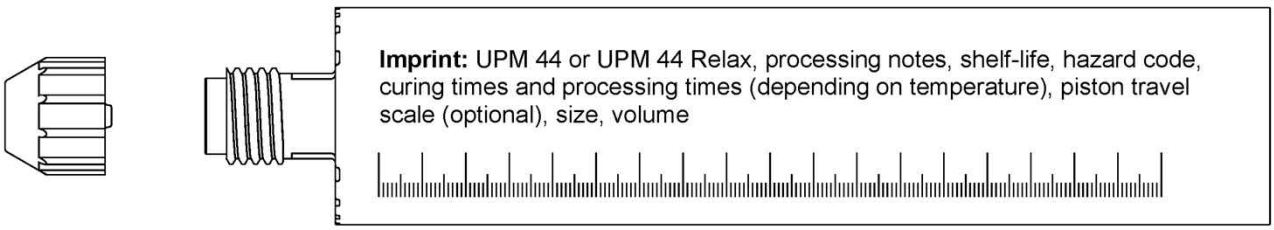

Static mixer UPAT MR Plus for injection cartridges up to 410 ml

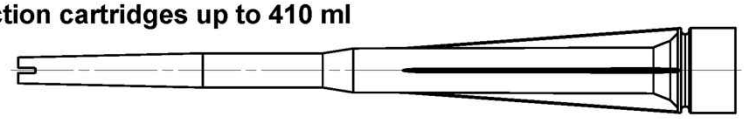

Static mixer UPAT JMR for injection cartridges 825 ml

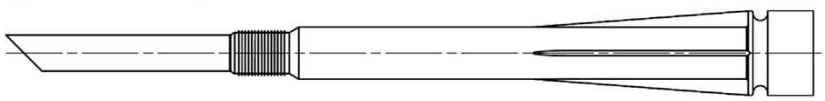

Injection adapter and extension tube Ø 9 for static mixer UPAT MR Plus;
Injection adapter and extension tube Ø 9 or Ø 15 for static mixer UPAT JMR



Reinforcing bar (rebar) Sizes: ϕ8, ϕ10, ϕ12, ϕ14, ϕ16, ϕ20, ϕ25, ϕ28

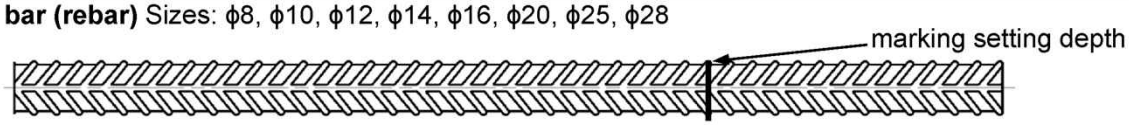

UPAT rebar anchor FRA / FRA HCR Sizes: M12, M16, M20, M24

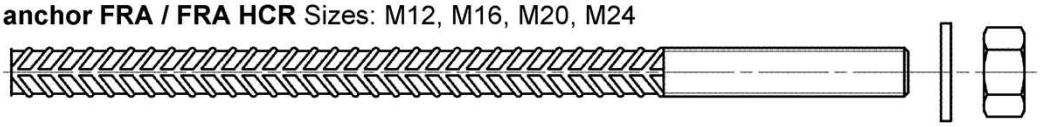

Blow out pump AB



Compressed-air cleaning tool ABP with UPAT compressed-air nozzle

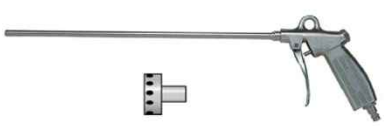

Figures not to scale

Rebar connection with injection system UPM 44

Product description
Overview system components; Injection mortar, static mixer, injection adapter, reinforcing bar, UPAT rebar anchor FRA, cleaning tools

Annex A4
Appendix 5 / 21

Properties of reinforcing bars (rebar)

Figure A5.1:



- The minimum value of related rib area $f_{R,min}$ according to EN 1992-1-1:2011
- The maximum outer rebar diameter over the ribs shall be:
  - The nominal diameter of the bar with rib $\phi + 2 \cdot h$ ($h \leq 0{,}07 \cdot \phi$)
  - (ϕ: Nominal diameter of the bar; h_{rib} = rib height of the bar)

Table A5.1: Installation conditions for rebars

Nominal diameter of the bar		**ϕ**	**8[1)]**		**10[1)]**		**12[1)]**		**14**	**16**	**20**	**25[1)]**		**28**
Nominal drill hole diameter	d_0	[mm]	10	12	12	14	14	16	18	20	25	30	35	35
Drill hole depth	h_0		$h_0 = l_v$											
Effective embedment depth	l_v		acc. to static calculation											
Minimum thickness of concrete member	h_{min}		$l_v + 30$ (≥ 100)						$l_v + 2d_0$					

[1)] Both drill hole diameters can be used

Table A5.2: Materials of rebars

Designation	**Reinforcing bar (rebar)**
Reinforcing bar EN 1992-1-1:2011, Annex C	Bars and de-coiled rods class B or C with f_{yk} and k according to NDP or NCI of EN 1992-1-1/NA $f_{uk} = f_{tk} = k \cdot f_{yk}$

Figures not to scale

Properties of UPAT rebar anchors FRA

Figure A6.1:

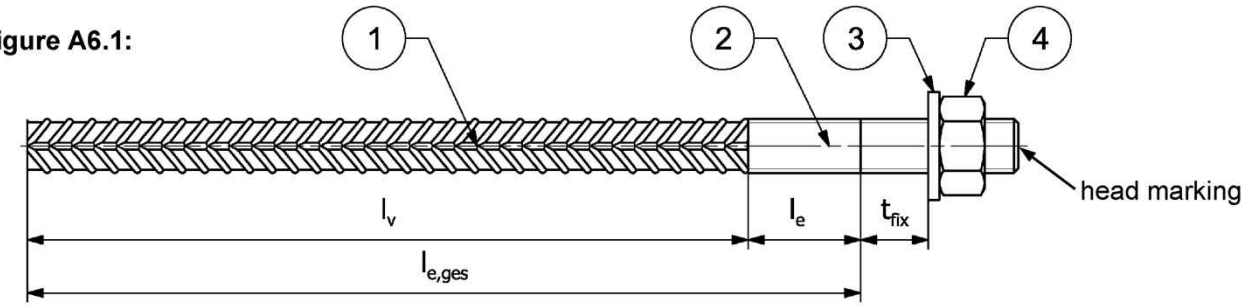

Head marking e.g.: FRA (for stainless steel)

FRA HCR (for high corrosion-resistant steel)

Table A6.1: Installation conditions for UPAT rebar anchors FRA

Thread diameter				**M12**[2]		**M16**	**M20**	**M24**[2]	
Nominal diameter		ϕ	[mm]	12		16	20	25	
Nominal drill bit diameter		d_0	[mm]	14	16	20	25	30	35
Drill hole depth ($h_0 = l_{e,ges}$)		$l_{e,ges}$	[mm]	$l_v + l_e$					
Effective embedment depth		l_v	[mm]	according to static calculation					
Distance concrete surface to welded join		l_e	[mm]	100					
Maximum Diameter of clearance hole in the fixture[1]	Pre-positioned	d_f	[mm]	14		18	22	26	
	Push through	d_f	[mm]	16	18	22	26	32	40
Minimum thickness of concrete member		h_{min}	[mm]	h_0+30		$h_0 + 2d_0$			
Maximum torque moment for attachment of the fixture		max T_{inst}	[Nm]	50		100	150	150	

[1] For bigger clearance holes in the fixture see EN 1992-4:2018
[2] Both drill bit diameters can be used

Table A6.2: Materials of UPAT rebar anchors FRA

Part	Description	Materials	
		FRA Corrosion resistance class CRC III acc. to EN 1993-1-4:2006+A1:2015	FRA HCR Corrosion resistance class CRC V acc. to EN 1993-1-4: 2006+A1:2015
1	Reinforcing bar	Bars and de-coiled rods class B or C with f_{yk} and k according to NDP or NCI of EN 1992-1-1:NA; $f_{uk} = f_{tk} = k \cdot f_{yk;}$ (f_{yk} = 500 N/mm^2)	
2	Round bar with partial or full thread	Stainless steel, strength class 80, according to EN 10088-1:2023	High corrosion-resistant steel, strength class 80, according to EN 10088-1: 2023
3	Washer ISO 7089:2000	Stainless steel, according to EN 10088-1: 2023	High corrosion-resistant steel, according to EN 10088-1: 2023
4	Hexagon nut	Stainless steel, strength class 80, acc. to EN ISO 3506-2:2020, according to EN 10088-1: 2023	High corrosion-resistant steel, strength class 80, acc. to EN ISO 3506-2:2020, according to EN 10088-1: 2023

Figures not to scale

Specifications of intended use part 1

Table B1.1: Overview use and performance categories

Anchorages subject to		**UPM 44 with …**			
		Reinforcing bar 		UPAT rebar anchor FRA 	
Hammer drilling or compressed air drilling with standard drill bit		all sizes			
Hammer drilling with hollow drill bit  (fischer “FHD”, Heller "Duster Expert", Bosch “Speed Clean“, Hilti "TE-CD, TE-YD")		Nominal drill bit diameter (d_0) 12 mm to 35 mm			
Use category I1	dry or wet concrete	all sizes			
Characteristic resistance under static and quasi static loading, in	uncracked concrete	all sizes	Tables: C1.1 C1.2 C1.3	all sizes	Tables: C1.1 C1.2 C1.3 C2.1 C2.2
	cracked concrete				
Characteristic resistance under seismic loading		-[1]		-[1]	
Installation direction		D3 (downward and horizontal and upwards (e.g. overhead))			
Installation temperature		$T_{i,min}$ = 0 °C to $T_{i,max}$ = +40 °C			
Service temperature	Temperature range	-40 °C to +80 °C		(max. short term temperature +80 °C; max long term temperature +50 °C)	
Resistance to fire		all sizes	Annex C3	all sizes	Table C2.3

[1] No performance assessed

Specifications of intended use part 2

Anchorages subject to:

- Static and quasi-static loading: reinforcing bar (rebar) size 8 mm to 28 mm; FRA M12 to M24
- Resistance to fire: reinforcing bar (rebar) size 8 mm to 28 mm; FRA M12 to M24

Base materials:

- Compacted reinforced or unreinforced normal weight concrete without fibres according to EN 206:2013+A2:2021
- Concrete strength classes C12/15 to C50/60 according to EN 206:2013+A2:2021
- Maximum chloride content of 0,40 % (CL 0.40) related to the cement content according to EN 206:2013+A2:2021
- Non-carbonated concrete
  Note: In case of a carbonated surface of the existing concrete structure the carbonated layer shall be removed in the area of the post-installed rebar connection with a diameter of ϕ + 60 mm prior to the installation of the new rebar. The depth of concrete to be removed shall correspond to at least the minimum concrete cover in accordance with EN 1992-1-1:2011. The foregoing may be neglected if building components are new and not carbonated and if building components are in dry conditions.

Use conditions (Environmental conditions) for UPAT rebar anchors FRA

- For all conditions according to EN 1993-1-4:2006+A1:2015 corresponding to corrosion resistance classes to **Annex A6 Table A6.2**.

Design:

- The structural design according to EN 1992-1-1:2011, EN 1992-1-2:2011 and **Annex B3** and **B4** are conducted under responsibility of a designer expierenced in the field of anchorages and concrete works.
- Verifiable calculation notes and drawings are prepared taking account of the forces to be transmitted.
- The actual position of the reinforcement in the existing structure shall be determined on the basis of the construction documentation and taken into account when designing.

Installation:

- The installation of post-installed rebar respectively UPAT rebar anchor FRA shall be done only by suitable trained installer and under Supervision on site; the conditions under which an installer may be considered as suitable trained and the conditions for Supervision on site are up to the Member States in which the installation is done.
- Check the position of the existing rebars (if the position of existing rebars is not known, it shall be determined using a rebar detector suitable for this purpose as well as on the basis of the construction documentation and then marked on the building component for the overlap joint).

General construction rules for post-installed rebars

Figure B3.1:

- Only tension forces in the axis of the rebar may be transmitted.
- The transfer of shear forces between new concrete and existing structure shall be designed additionally according to EN 1992-1-1:2011.
- The joints for concreting must be roughened to at least such an extent that aggregate protrude.

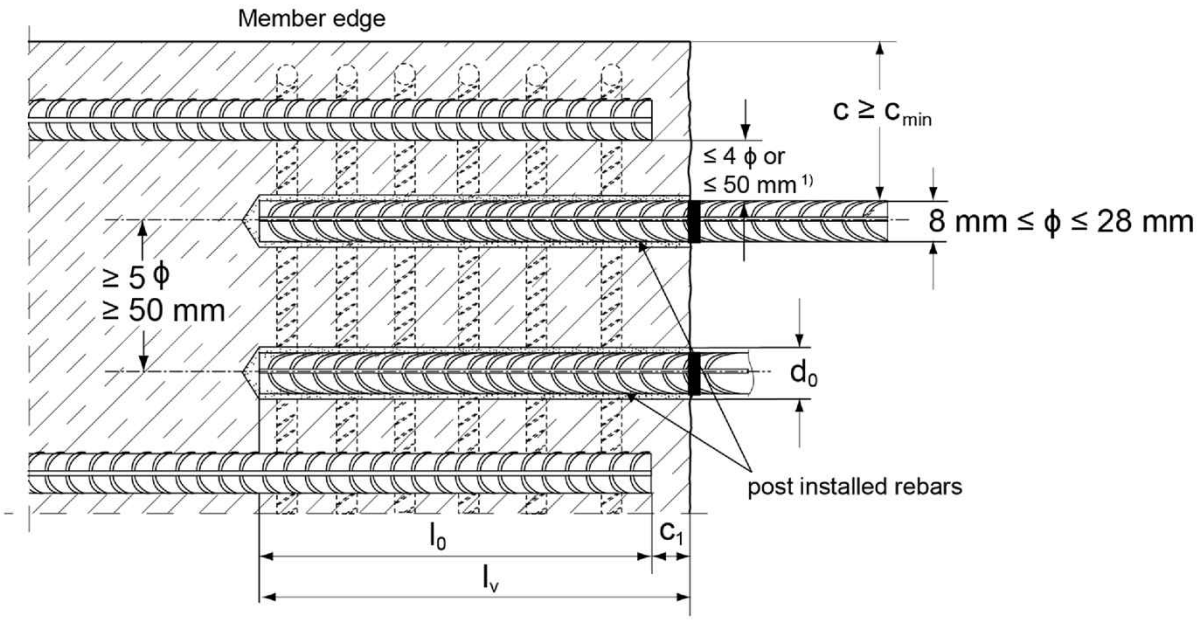

[1] If the clear distance between lapped bars exceeds 4 ϕ or 50 mm then the lap length shall be increased by the difference between the clear bar distance and the smaller 4 ϕ or 50 mm.

c	concrete cover of post-installed rebar
c_1	concrete cover at end-face of existing rebar
c_{min}	minimum concrete cover according to **Table B5.1** and to EN 1992-1-1:2011, Section 4.4.1.2
ϕ	nominal diameter of reinforcing bar
l_0	lap length, according to EN 1992-1-1:2011 for static loading
l_v	effective embedment depth, $\geq l_0 + c_1$
d_0	nominal drill bit diameter, see **Annex B6**

Figures not to scale

Figure B4.1:

- Only tension forces in the axis of the UPAT rebar anchor FRA may be transmitted.
- The tension force must be transferred via an overlap joint to the reinforcement in the building part.
- The transmission of the shear load shall be ensured by appropriate additional measures, e.g. by shear lugs or by anchors with a European Technical Assessment (ETA).
- In the anchor plate, the holes for the UPAT rebar anchors FRA shall be executed as slotted holes with the axis in the direction of the shear force.
- The length of the bonded-in thread may not be accounted as anchorage.

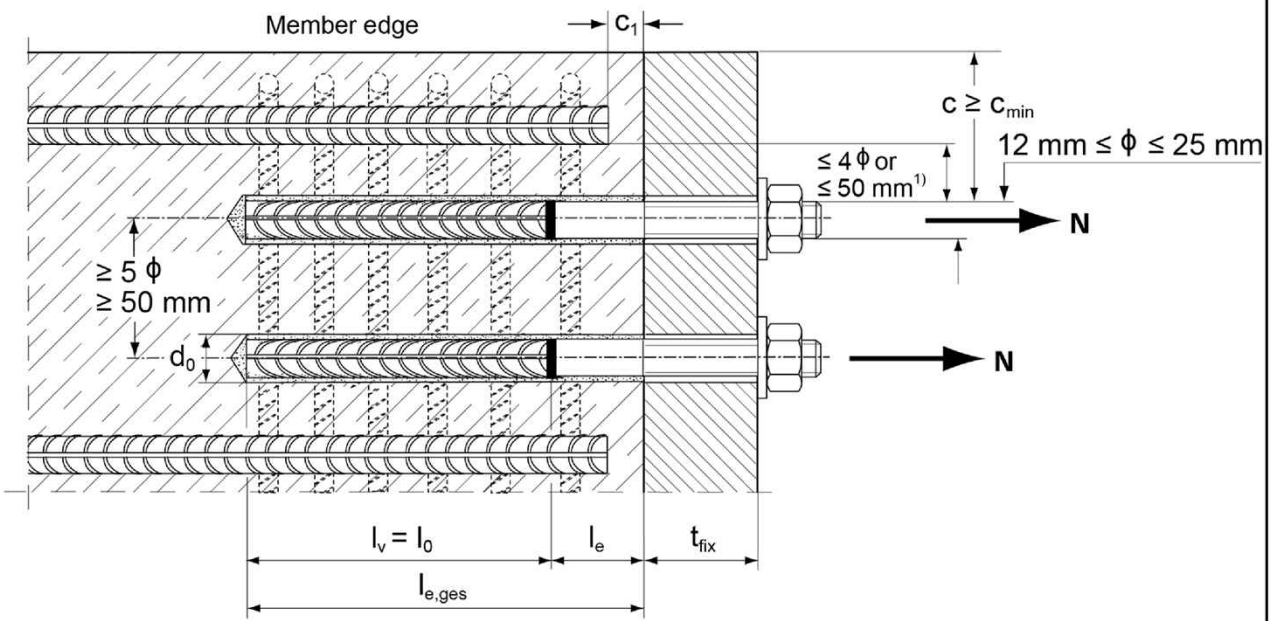

1) If the clear distance between lapped bars exceeds 4 ϕ or 50 mm then the lap length shall be increased by the difference between the clear bar distance and the smaller 4 ϕ or 50 mm.

c	concrete cover of post-installed UPAT rebar anchor FRA
c_1	concrete cover at end-face of existing rebar
c_{min}	minimum concrete cover according to **Table B5.1** and to EN 1992-1-1:2011, Section 4.4.1.2
ϕ	nominal diameter of reinforcing bar
l_0	lap length, according to EN 1992-1-1:2011, Section 8.7.3
$l_{e,ges}$	overall embedment depth, $\geq l_0 + l_e$
d_0	nominal drill bit diameter, see **Annex B6**
l_e	length of the bonded in threaded part
t_{fix}	thickness of the fixture
l_v	effective embedment depth

Figures not to scale

Table B5.1: Minimum concrete cover c_{min} [1] depending of the drilling method and the drilling tolerance

Drilling method	nominal diameter of reinforcing bar ϕ [mm]	Minimum concrete cover c_{min}	
		Without drilling aid [mm]	With drilling aid [mm]
Hammer drilling with standard drill bit or hollow drill bit	< 25	30 mm + 0,06 $l_v \geq 2\ \phi$	30 mm + 0,02 $l_v \geq 2\ \phi$
	≥ 25	40 mm + 0,06 $l_v \geq 2\ \phi$	40 mm + 0,02 $l_v \geq 2\ \phi$
Compressed air drilling	< 25	50 mm + 0,08 l_v	50 mm + 0,02 l_v
	≥ 25	60 mm + 0,08 $l_v \geq 2\ \phi$	60 mm + 0,02 $l_v \geq 2\ \phi$

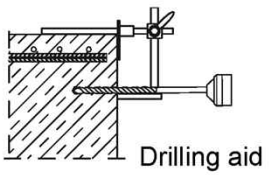

[1] See **Annex B3, Figure B3.1** and **Annex B4, Figure B4.1**
Note: The minimum concrete cover as specified in EN 1992-1-1:2011 must be observed.

Table B5.2: Dispensers and cartridge sizes corresponding to maximum embedment depth $l_{v,max}$

reinforcing bars (rebar)	UPAT rebar anchor FRA	Manual dispenser	Accu and pneumatic dispenser (small)	Accu and pneumatic dispenser (large)
		Cartridge size		
		< 500 ml		> 500 ml
ϕ [mm]	thread [-]	$l_{v,max}$ / $l_{e,ges,max}$ [mm]		$l_{v,max}$ / $l_{e,ges,max}$ [mm]
8	---	1000	1000	1800
10	---			
12	FRA M12 FRA HCR M12		1200	
14	---			
16	FRA M16 FRA HCR M16		1500	
20	FRA M20 FRA HCR M20	700	1300	
25	FRA M24 FRA HCR M24		1000	2000
28	---	700	700	

Table B5.3: Conditions for use static mixer without an extension tube

Nominal drill hole diameter		d_0	[mm]	10	12	14	16	18	20	24	25	30	35
Drill hole depth h_0 by using	UPAT MR Plus			≤ 90		≤ 120	≤ 140	≤ 150	≤ 160	≤ 190	≤ 210		
	UPAT JMR			-	-	≤ 90	≤ 160	≤ 180	≤ 190	≤ 220		≤ 250	

Rebar connection with injection system UPM 44

Intended use
Minimum concrete cover;
dispenser and cartridge sizes corresponding to maximum embedment depth

Annex B5
Appendix 12 / 21

Table B6.1: Working times t_{work} and curing times t_{cure}

Temperature in the anchorage base [°C]	Maximum working time[1] t_{work}		Minimum curing time[2] t_{cure}	
	UPM 44	**UPM 44 Relax**	**UPM 44**	**UPM 44 Relax**
0 to 5 [3]	13 min	-	3 h	6 h
> 5 to 10 [3]	9 min	20 min	90 min	3 h
> 10 to 20	5 min	10 min	60 min	2 h
> 20 to 30	4 min	6 min	45 min	60 min
> 30 to 40 [4]	2 min	4 min	35 min	60 min

[1] Maximum time from the beginning of the injection to rebar / UPAT rebar anchor FRA setting and positioning.
[2] For wet concrete the curing time must be doubled.
[3] If the temperature in the concrete falls below 10 °C the cartridge must be warmed up to +15 °C.
[4] If the temperature in the concrete exceeds 30 °C the cartridge must be cooled down to +15 °C up to 20 °C.

Table B6.2: Installation tools for drilling and cleaning the bore hole and injection of the mortar

reinforcing bars (rebar)	UPAT rebar anchor FRA	Drilling and cleaning				Injection	
		Nominal drill bit diameter	Diameter of cutting edge	Steel brush diameter	Diameter of UPAT compressed air nozzle	Diameter of extension tube	Injection adapter
ϕ [mm]	Designation	d_0 [mm]	d_{cut} [mm]	d_b [mm]	[mm]	[mm]	[colour]
8[1]	---	10	≤ 10,50	11,0	---	9	---
		12	≤ 12,50	12,5	11		nature
10[1]	---	12	≤ 12,50	12,5			
		14	≤ 14,50	15			blue
12[1]	FRA M12[1] FRA HCR M12[1]	14	≤ 14,50	15	15		
		16	≤ 16,50	17			red
14	---	18	≤ 18,50	19		9 or 15	yellow
16	FRA M16 FRA HCR M16	20	≤ 20,55	21,5	19		green
20	FRA M20 FRA HCR M20	25	≤ 25,55	26,5			black
25[1]	FRA M24[1] FRA HCR M24[1]	30	≤ 30,55	32	28		grey
		35	≤ 35,70	37			brown
28	---	35	≤ 35,70	37			brown

[1] Both drill bit diameters can be used.

Safety regulations



Review the Safety Data Sheet (SDS) before use for proper and safe handling!

Wear well-fitting protective goggles and protective gloves when working with mortar UPM 44 / UPM 44 Relax.

Important: Observe the instructions for use provided with each cartridge.

Installation instruction part 1; Installation with UPM 44 / UPM 44 Relax

Hole drilling

Note: Before drilling, remove carbonized concrete; clean contact areas (see **Annex B2**)
In case of aborted drill holes the drill hole shall be filled with mortar.

1a **Hammer drilling or compressed air drilling**

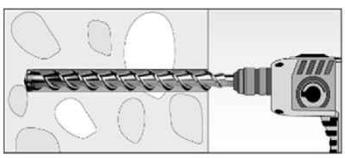

Drill the hole to the required embedment depth using a hammer drill with carbide drill bit set in rotation hammer mode or a pneumatic drill.
Drill bit sizes see **Table B6.2**.

1b **Hammer drilling with hollow drill bit**

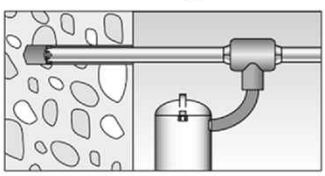

Drill the hole to the required embedment depth using a hammer drill with hollow drill bit in rotation hammer mode.
Dust extraction conditions see drill hole cleaning **Annex B8**.
Drill bit sizes see **Table B6.2**.

2

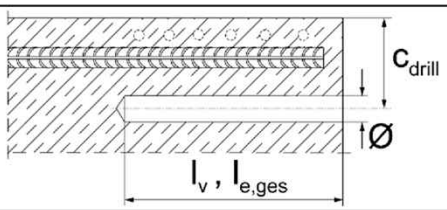

Measure and control concrete cover c
(c_{drill} = c + Ø / 2)
Drill parallel to surface edge and to existing rebar.
Where applicable use drilling aid.

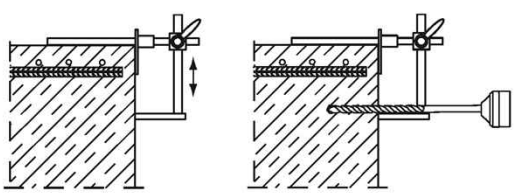

For holes l_v > 20 cm use drilling aid.
Three different options can be considered:

A) drilling aid
B) Slat or spirit level
C) Visual check

Minimum concrete cover c_{min} see **Table B5.1.**

Installation instruction part 2; Installation with UPM 44 / UPM 44 Relax

Drill hole cleaning

Hammer or compressed air drilling



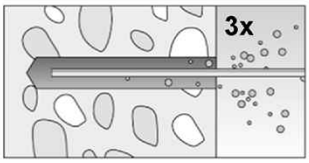

Clean the drill hole:
For d_0 < 18 mm and depths l_v resp. $l_{e,ges} \leq 12 \cdot \phi$ blow out the hole three times by hand.

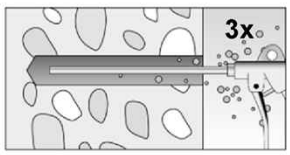

For d_0 > 18 mm and depths l_v resp. $l_{e,ges} > 12 \cdot \phi$ blow out the hole three times with oil-free compressed air ($p \geq 6$ bar). Use suitable compressed-air nozzle (see **Table B6.2**).

3a

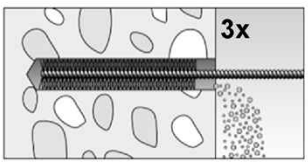

Brush drill hole three times; for drill hole diameters $d_0 \geq 30$ mm attach brush to a power tool and brush hole with a speed of max. 550 revolutions per minute. For deep holes a brush extension is mandatory.
Use suitable brushes (see **Table B6.2**).

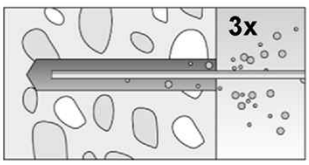

Clean the drill hole:
For d_0 < 18 mm and depths l_v resp. $l_{e,ges} \leq 12 \cdot \phi$ blow out the hole three times by hand.

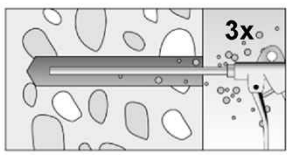

For d_0 > 18 mm and depths l_v resp. $l_{e,ges} > 12 \cdot \phi$ blow out the hole three times with oil-free compressed air ($p \geq 6$ bar) Use suitable UPAT compressed-air nozzle (see **Table B6.2**).

Hammer drilling with hollow drill bit



3b

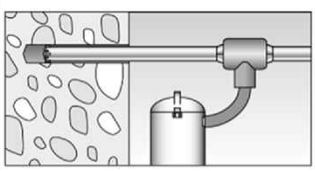

Use a suitable dust extraction system, e. g.
fischer FVC 35 M or a comparable dust extraction system with equivalent performance data.
Drill the hole with hollow drill bit. The dust extraction system has to extract the drill dust nonstop during the drilling process and must be adjusted to maximum power.
No further drill hole cleaning necessary.

Installation instruction part 3; Installation with UPM 44 / UPM 44 Relax

reinforcing bars (rebar) / UPAT rebar anchor FRA and cartridge preparation

4	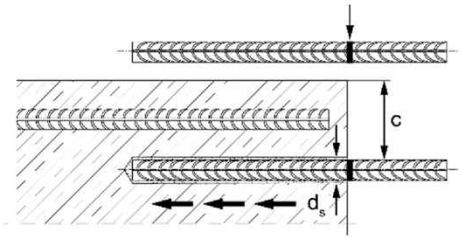	Before use, make asure that the rebar or the UPAT rebar anchor FRA is dry and free of oil or other residue. Mark the embedment depth l_v (e.g. with tape) Insert rebar in borehole, to verify drill hole depth and setting depth l_v resp. $l_{e,ges.}$
5	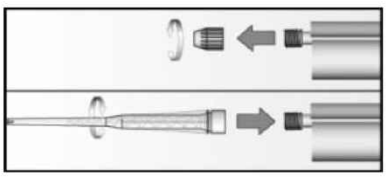	Twist off the sealing cap Twist on the static mixer (the spiral in the static mixer must be clearly visible).
6	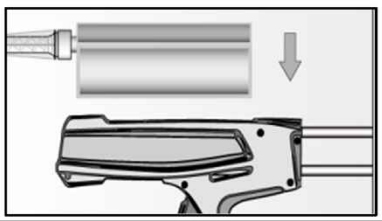	Place the cartridge into a suitable dispenser.
7	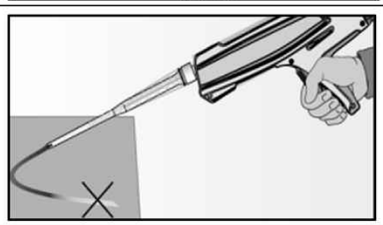	Press out approximately 10 cm of mortar until the resin is permanently grey in colour. Mortar which is not grey in colour will not cure and must be disposed.

Installation instruction part 4; Installation with UPM 44 / UPM 44 Relax

Injection of the mortar without extension tube

8a

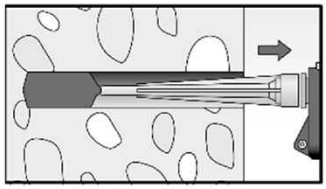

Inject the mortar from the back of the hole towards the front and slowly withdraw the static mixer step by step with each trigger pull.
Avoid bubbles.
Fill holes approximately 2/3 full, to ensure that the annular gap between the rebar and the concrete will be completely filled with adhesive over the entire embedment length.
The conditions for mortar injection without extension tube can be found in **Table B5.3**.



After injecting, release the dispenser. This will prevent further mortar discharge from the static mixer.

Injection of the mortar with extension tube

8b

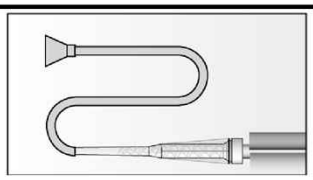

Assemble static mixer UPAT MR Plus or UPAT JMR, extension tube and appropriate injection adapter (see **Table B6.2**).

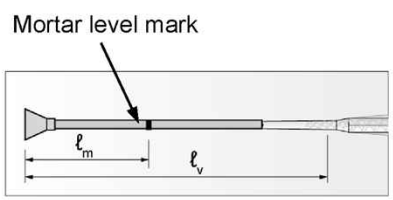

Mark the required mortar level l_m and embedment depth l_v resp. $l_{e,ges}$ with tape or marker on the injection extension tube.

a) Estimation:

$$l_m = \frac{1}{3} \cdot l_v \; resp. \; l_m = \frac{1}{3} \cdot l_{e,ges} \text{ [mm]}$$

b) Precise equation for optimum mortar volume:

$$l_m = l_v \; resp. \; l_{e,ges} \left((1{,}2 \cdot \frac{d_s^2}{d_0^2} - 0{,}2) \right) \text{ [mm]}$$

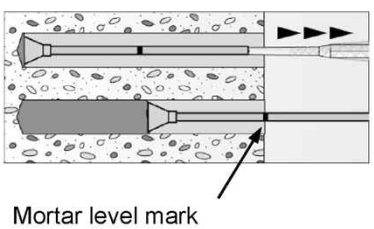

Insert injection adapter to back of the hole. Begin injection allowing the pressure of the injected adhesive mortar to push the injection adapter towards the front of the hole. Do not actively pull out!
Fill holes approximately 2/3 full, to ensure that the annular gap between the rebar and the concrete will be completely filled with adhesive over the embedment length.
When using an injection adapter continue injection until the mortar level mark l_m becomes visible.
Maximum embedment depth see **Table B5.2**.



After injecting, release the dispenser. This will prevent further mortar discharge from static mixer.

Installation instruction part 5; Installation with UPM 44 / UPM 44 Relax

Insert rebar / UPAT rebar anchor FRA

9	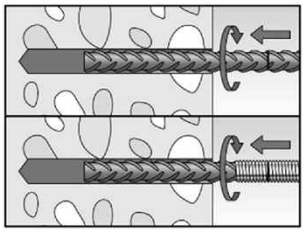	Insert the rebar / UPAT rebar anchor FRA slowly twisted into the borehole until the embedment mark is reached. Recommendation: Rotation back and forth of the reinforcement bar or the UPAT rebar anchor FRA makes pushing easy.
10	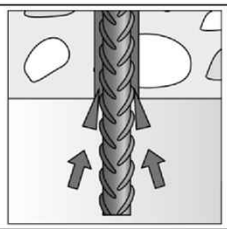	For overhead installation, support the rebar / UPAT rebar anchor FRA and secure it from falling till mortar started to harden, e.g. using wedges.
11	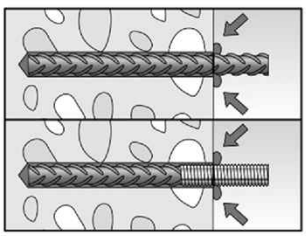	After installing the rebar or UPAT rebar anchor FRA the annular gap must be completely filled with mortar. Proper installation • Desired embedment depth is reached l_v, resp. $l_{e,ges}$: embedment mark at concrete surface • Excess mortar flows out of the borehole after the rebar has been fully inserted up to the embedment mark.
12		Observe the working time "t_{work}" (**see Table B6.1**), which varies according to temperature of base material. Minor adjustments to the rebar / UPAT rebar anchor FRA position may be performed during the working time Full load may be applied only after the curing time "t_{cure}" has elapsed (**see Table B6.1**).
13	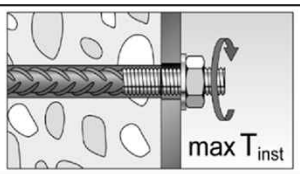	Mounting the fixture for UPAT rebar anchor FRA, max T_{inst} see T**able A6.1**.

Minimum anchorage length and minimum lap length

The minimum anchorage length $l_{b,min}$ and the minimum lap length $l_{0,min}$ according to EN 1992-1-1:2011 shall be multiplied by the relevant amplification factor α_{lb} according to **Table C1.1.**

Table C1.1: Amplification factor α_{lb} related to concrete strength class and drilling method

Hammer drilling, hollow drilling and compressed air drilling

Rebar / UPAT rebar anchor FRA	Amplification factor α_{lb}								
	Concrete strength class								
ϕ [mm]	C12/15	C16/20	C20/25	C25/30	C30/37	C35/45	C40/50	C45/55	C50/60
8 to 25	1,0						1,1		1,2
28	1,0								

Table C1.2: Bond efficiency factor k_b related to concrete strength class and drilling method

Hammer drilling, hollow drilling and compressed air drilling

Rebar / UPAT rebar anchor FRA	Bond efficiency factor k_b								
	Concrete strength class								
ϕ [mm]	C12/15	C16/20	C20/25	C25/30	C30/37	C35/45	C40/50	C45/55	C50/60
8 to 25	1,00								
28	1,00						0,91	0,84	0,84

Table C1.3: Design values of the bond strength $f_{bd,PIR}$ in N/mm² related to concrete strength class and drilling method for good bond conditions

$$f_{bd,PIR} = k_b \cdot f_{bd}$$

f_{bd}: Design value of the bond strength in N/mm² considering the concrete strength classes and the rebar diameter for good bond condition (for all other bond conditions multiply the values by $\eta_1 = 0,7$)
and recommended partial factor $\gamma_c = 1,5$ according to EN 1992-1-1: 2011

k_b: Bond efficiency factor according to **Table C1.2**

Hammer drilling, hollow drilling and compressed air drilling

Rebar / UPAT rebar anchor FRA	Bond strength $f_{bd,PIR}$ [N/mm²]								
	Concrete strength class								
ϕ [mm]	C12/15	C16/20	C20/25	C25/30	C30/37	C35/45	C40/50	C45/55	C50/60
8 to 25	1,6	2,0	2,3	2,7	3,0	3,4	3,7	4,0	4,3
28	1,6	2,0	2,3	2,7	3,0	3,4	3,4	3,4	3,7

Table C2.1: Characteristic **tensile yield strength** for rebar part of **UPAT rebar anchors FRA**

UPAT rebar anchor FRA / FRA HCR			**M12**	**M16**	**M20**	**M24**
Characteristic tensile yield strength for rebar part						
Rebar diameter	ϕ	[mm]	12	16	20	25
Characteristic tensile yield strength for rebar	f_{yk}	[N/mm²]	500	500	500	500
Partial factor for rebar part	$\gamma_{Ms,N}$ [1)]	[-]	1,15			

[1)] In absence of national regulations

Table C2.2: Characteristic resistance to **steel failure** under tension loading of **UPAT rebar anchors FRA**

UPAT rebar anchor FRA / FRA HCR			**M12**	**M16**	**M20**	**M24**
Characteristic resistance to steel failure under tension loading						
Characteristic resistance	$N_{Rk,s}$	[kN]	62,0	111,0	173,0	236,5
Partial factor						
Partial factor	$\gamma_{Ms,N}$ [1)]	[-]	1,4			

[1)] In absence of national regulations

Table C2.3: Characteristics resistance to **steel failure** of **UPAT rebar anchors FRA** under fire exposure R30 to R120

UPAT rebar anchor FRA / FRA HCR				**M12**	**M16**	**M20**	**M24**
Characteristic resistance to steel failure under fire exposure	R30	$N_{Rk,s,fi}$	[kN]	2,5	4,7	7,4	10,6
	R60			2,1	3,9	6,1	8,8
	R90			1,7	3,1	4,9	7,1
	R120			1,3	2,5	3,9	5,6

Design value of the ultimate bond strength $f_{bd,fi}$ at increased temperature for concrete strength classes C12/15 to C50/60 (all drilling methods)

The design value of the bond strength $f_{bd,fi}$ at increased temperature has to be calculated by the following equation:

$$f_{bd,fi} = k_{fi}(\theta) \cdot f_{bd,PIR} \cdot \frac{\gamma_c}{\gamma_{m,fi}}$$

If: $\theta > 74$ °C $\qquad k_{fi}(\theta) = \frac{24{,}308 \cdot e^{-0{,}012 \cdot \theta}}{f_{bd,PIR} \cdot 4{,}3} \leq 1{,}0$

If: $\theta > \theta_{max}$ (317 °C) $\qquad k_{fi}(\theta) = 0$

$f_{bd,fi}$ = Design value of the ultimate bond strength at increased temperature in N/mm²

θ = Temperature in °C in the mortar layer

$k_{fi}(\theta)$ = Reduction factor at increased temperature

$f_{bd,PIR}$ = Design value of the bond strength in N/mm² in cold condition according to **Table C1.3** considering the concrete strength classes, the rebar diameter, the drilling method and the bond conditions according to EN 1992-1-1:2011

γ_C = 1,5 recommended partial factor according to EN 1992-1-1:2011

$\gamma_{m,fi}$ = 1,0 recommended partial factor according to EN 1992-1-2:2011

For evidence at increased temperature the anchorage length shall be calculated according to EN 1992-1-1:2011 Equation 8.3 using the temperature-dependent ultimate design value of bond strength $f_{bd,fi}$.

Figure C3.1: Example graph of reduction factor $k_{fi}(\theta)$ for concrete class C20/25 for good bond conditions

