Einfach. Sicher. Upat

DÉCLARATION DES PERFORMANCES

DoP 0402

pour le système d'injection Upat UPM 44 (cheville à scellement pour utilisation dans la maçonnerie) FR

1. Code d'identification unique du type de produit: **DoP 0402**

2. Usage(s) prévu(s): **Fixation dans la maçonnerie, Voir annexes, en particulier les annexes B1 - B22.**

3. Fabricant: **Upat Vertriebs GmbH, Bebelstraße 11, 79108 Freiburg im Breisgau, Allemagne**

4. Mandataire: **–**

5. Système(s) d'évaluation et de vérification de la constance des performances: **1**

6. Document d'évaluation européen: **EAD 330076-01-0604, Edition 10/2022**
   Evaluation Technique Européenne: **ETA-15/0555; 2025-11-04**
   Organisme d'évaluation technique: **DIBt- Deutsches Institut für Bautechnik**
   Organisme(s) notifié(s): **2873 TU Darmstadt**

7. Performance(s) déclarée(s):

Résistance mécanique et stabilité (BWR 1)

Résistance caractéristique sous charge statique et quasi statique:

1 Résistance caractéristique à la rupture de l'acier d'un ancrage isolé sous charge de traction: Voir annexes, en particulier les annexes C1, C3

2 Résistance caractéristique à la rupture de l'acier d'un ancrage isolé sous charge de cisaillement avec et sans bras de levier: Voir annexes, en particulier les annexes C2, C3

3 Résistance caractéristique à la rupture par extraction glissement ou rupture de la maçonnerie d'un ancrage isolé sous charge de traction, facteur de réduction: Voir annexes, en particulier les annexes C5, C7, C9, C11, C13, C15, C17, C19, C22, C26, C29, C31, C34, C38, C42, C46, C50, C54, C58, C62, C65, C67, C70, C74, C78, C82, C85, C88, C92, C95, C97, C100, C103, C106, C109, C112, C115, C117, C120, C122, C123

4 Résistance caractéristique à la rupture locale de la brique ou à la rupture en bord de la brique d'un ancrage isolé sous charge de cisaillement: Voir annexes, en particulier les annexes C5, C7, C9, C11, C13, C15, C17, C19, C23, C27, C29, C31, C35, C39, C43, C47, C51, C55, C59, C63, C65, C68, C71, C75, C79, C83, C85, C89, C93, C95, C97, C101, C103, C107, C109, C113, C115, C117, C120, C122

5 Résistance caractéristique à la rupture de la brique d'un groupe de chevilles sous charge de traction: Voir annexes, en particulier les annexes B21, B22, C4, C6, C8, C10, C12, C14, C16, C18, C20, C21, C24, C25, C28, C30, C32, C33, C36, C37, C40, C41, C44, C45, C48, C49, C52, C53, C56, C57, C60, C61, C64, C66, C69, C72, C73, C76, C77, C80, C81, C84, C86, C87, C90, C91, C94, C96, C98, C99, C102, C104, C105, C108, C110, C111, C114, C116, C119, C121

6 Résistance caractéristique à la rupture locale de la brique ou à la rupture en bord de la brique d'un groupe de chevilles sous charge de cisaillement: Voir annexes, en particulier les annexes B21, B22, C4, C6, C8, C10, C12, C14, C16, C18, C20, C21, C24, C25, C28, C30, C32, C33, C36, C37, C40, C41, C44, C45, C48, C49, C52, C53, C56, C57, C60, C61, C64, C66, C69, C72, C73, C76, C77, C80, C81, C84, C86, C87, C90, C91, C94, C96, C98, C99, C102, C104, C105, C108, C110, C111, C114, C116, C119, C121

7 Distances au bord, entraxes, épaisseur du support: Voir annexes, en particulier les annexes B21, B22, C4, C6, C8, C10, C12, C14, C16, C18, C20, C21, C24, C25, C28, C30, C32, C33, C36, C37, C40, C41, C44, C45, C48, C49, C52, C53, C56, C57, C60, C61, C64, C66, C69, C72, C73, C76, C77, C80, C81, C84, C86, C87, C90, C91, C94, C96, C98, C99, C102, C104, C105, C108, C110, C111, C114, C116, C118, C121

8 Déplacements sous charge de traction et de cisaillement: voir annexes, en particulier annexe C123

9 Couple de serrage maximum: Voir annexes, en particulier les annexes C4, C6, C8, C10, C12, C14, C16, C18, C20, C21, C24, C25, C28, C30, C32, C33, C36, C37, C40, C41, C44, C45, C48, C49, C52, C53, C56, C57, C60, C61, C64, C66, C69, C72, C73, C76, C77, C80, C81, C84, C86, C87, C90, C91, C94, C96, C98, C99, C102, C104, C105, C108, C110, C111, C114, C116, C118, C121

Résistance caractéristique et déplacements sous charge sismique:

10 Résistance à la charge de traction: NPD

11 Résistance à la charge de cisaillement: NPD

12 Facteur espace annulaire: NPD

Sécurité en cas d'incendie (BWR 2)

13 Réaction au feu: Classe (A1)

14 Résistance au feu sous charge de traction et de cisaillement avec et sans bras de levier, distances au bord et entraxes minimums:voir annexes, en particulier annexe C124

Hygiène, santé et environnement (BWR 3)

15 Contenu, émission et/ou rejet de substances dangereuses: NPD

8. Documentation technique appropriée et/ou documentation technique spécifique: **–**

Les performances du produit identifié ci-dessus sont conformes aux performances déclarées. Conformément au règlement (UE) no 305/2011, la présente déclaration des performances est établie sous la seule responsabilité du fabricant mentionné ci-dessus.

Signé pour le fabricant et en son nom par:

i.V.

Dr.Christian Weber, Responsable du Développement

Dieter Pfaff, Chef de la Fédération Internationale de Production et Gestion de la Qualité

Tumlingen, 2026-08-01

Cette DoP a été préparée en plusieurs langues. En cas de différend relatif à l'interprétation, la version anglaise prévaudra.
L'annexe comprend des informations volontaires et complémentaires en langue anglaise dépassant les exigences légales (spécifiées de manière neutre).

Translation guidance Essential Characteristics and Performance Parameters for Annexes

Guide de traduction des caractéristiques essentielles et des paramètres de performance pour les annexes

Mechanical resistance and stability (BWR 1) **Résistance mécanique et stabilité (BWR 1)**		
Characteristic resistance for static and quasi-static loading: **Résistance caractéristique sous charge statique et quasi statique:**		
1	Characteristic resistance to steel failure of a single anchor under tension loading: **Résistance caractéristique à la rupture de l'acier d'un ancrage isolé sous charge de traction:**	$N_{Rk,s}$ [kN]
2	Characteristic resistance to steel failure of a single anchor under shear loading with and without level arm: **Résistance caractéristique à la rupture de l'acier d'un ancrage isolé sous charge de cisaillement avec et sans bras de levier:**	$V_{Rk,s}$ [kN], $M^0_{Rk,s}$ [Nm]
3	Characteristic resistance to pull-out failure or brick breakout failure of a single anchor under tension loading, Reduction factor: **Résistance caractéristique à la rupture par extraction glissement ou rupture de la maçonnerie d'un ancrage isolé sous charge de traction, facteur de réduction:**	$N_{Rk,p}$; $N_{Rk,b}$; [kN] $N_{Rk,p,c}$; $N_{Rk,b,c}$ [kN], β [-]
4	Characteristic resistance to local brick failure or brick breakout failure of a single anchor under shear loading: **Résistance caractéristique à la rupture locale de la brique ou à la rupture en bord de la brique d'un ancrage isolé sous charge de cisaillement:**	$V_{Rk,b}$; $V_{Rk,c,II}$; $V_{Rk,c,\perp}$ [kN]
5	Characteristic resistance to brick breakout failure of an anchor group under tension loading: **Résistance caractéristique à la rupture de la brique d'un groupe de chevilles sous charge de traction:**	N^g_{Rk} [kN], $\alpha_{g,N}$ [-]
6	Characteristic resistance to local brick failure or brick breakout failure of an anchor group under shear loading: **Résistance caractéristique à la rupture locale de la brique ou à la rupture en bord de la brique d'un groupe de chevilles sous charge de cisaillement:**	$V^g_{Rk,b}$; $V^g_{Rk,c,II}$; $V^g_{Rk,c,\perp}$ [kN]; $\alpha_{g,V,II}$; $\alpha_{g,V,\perp}$ [-]
7	Edge distances, spacing, member thickness: **Distances au bord, entraxes, épaisseur du support:**	c_{cr}; s_{cr}; c_{min}; $s_{min,II}$; $s_{min,\perp}$; h_{min} [mm]
8	Displacements under tension and shear loading: **Déplacements sous charge de traction et de cisaillement:**	δ_{N0}; $\delta_{N\infty;}$ $\delta_{V0;}$ $\delta_{V\infty}$ [mm]
9	Maximum installation torque: **Couple de serrage maximum:**	max. T_{inst} [Nm]
Characteristic resistance and displacements for seismic loading: **Résistance caractéristique et déplacements sous charge sismique:**		
10	Resistance to tension load, displacements: **Résistance à la charge de traction:**	$N_{Rk,s,eq}$; $N_{Rk,eq}$ [kN], $\alpha_{N,seis}$ [-]; $\delta_{N,eq}$ [mm]
11	Resistance to shear load, displacements: **Résistance à la charge de cisaillement:**	$V_{Rk,s,eq}$; $V_{Rk,b,eq}$ [kN], $\alpha_{V,seis}$ [-]; $\delta_{V,eq}$ [mm]
12	Factor annular gap: **Facteur espace annulaire:**	α_{gap} [-]
Safety in case of fire (BWR 2) **Sécurité en cas d'incendie (BWR 2)**		
13	Reaction to fire: **Réaction au feu:**	-
14	Resistance to fire under tension and shear loading with and without level arm, minimum edge distances and spacing: **Résistance au feu sous charge de traction et de cisaillement avec et sans bras de levier, distances au bord et entraxes minimums:**	$N_{Rk,s,fi}$; $N_{Rk,p,fi}$; [kN], $N_{Rk,b,fi}$; $V_{Rk,s,fi}$ [kN], $M^0_{Rk,s}$ [Nm], $c_{cr,fi}$, $s_{cr,fi}$ [mm]
Hygiene, health and the environment (BWR 3) **Hygiène, santé et environnement (BWR 3)**		
15	Content, emission and/or release of dangerous substances: **Contenu, émission et/ou rejet de substances dangereuses:**	-

Specific Part

1 Technical description of the product

The Upat injection system UPM 44 for masonry is a bonded anchor (injection type) consisting of a mortar cartridge with injection mortar Upat UPM 44, UPM 44 Relax and UPM 44 Express, a perforated sieve sleeve and an anchor rod with hexagon nut and washer or an internal threaded rod. The steel elements are made of zinc coated steel, stainless steel or high corrosion resistant steel.

The anchor rod is placed into a drilled hole filled with injection mortar and is anchored via the bond between steel element, injection mortar and masonry and mechanical interlock.

The product description is given in Annex A.

2 Specification of the intended use in accordance with the applicable European Assessment Document

The performances given in Section 3 are only valid if the fastener is used in compliance with the specifications and conditions given in Annex B.

The verifications and assessment methods on which this European Technical Assessment is based lead to the assumption of a working life of the fastener of at least 50 years. The indications given on the working life cannot be interpreted as a guarantee given by the producer, but are to be regarded only as a means for choosing the right products in relation to the expected economically reasonable working life of the works.

3 Performance of the product and references to the methods used for its assessment

3.1 Mechanical resistance and stability (BWR 1)

Essential characteristic	Performance
Characteristic resistance for static and quasi-static loading	See Annexes B4 to B7, B21, B22, C1 to C123
Characteristic resistance and displacements for seismic loading	No performance assessed

3.2 Safety in case of fire (BWR 2)

Essential characteristic	Performance
Reaction to fire	Class A1
Resistance to fire under tension and shear loading with and without lever arm. Minimum edge distances and spacing	See Annex C124

3.3 Hygiene, health and the environment (BWR 3)

Essential characteristic	Performance
Content, emission and/or release of dangerous substances	No performance assessed

4 Assessment and verification of constancy of performance (AVCP) system applied, with reference to its legal base

In accordance with the European Assessment Document EAD 330076-01-0604 the applicable European legal act is: [97/177/EC].

The system to be applied is: 1

Installation conditions part 1

Anchor rods with perforated sleeve UPM SH K; Installation in perforated and solid brick masonry

Pre-positioned installation:

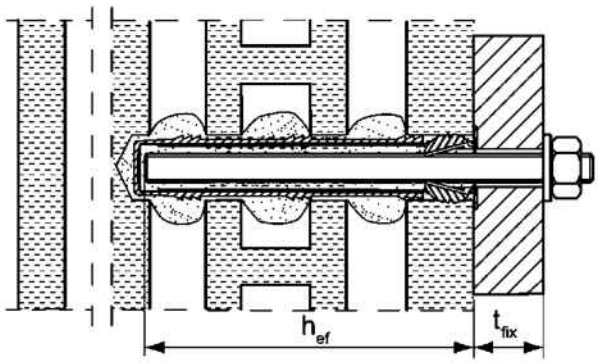

Installation with render bridge

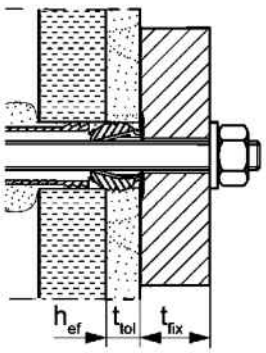

Size of the perforated sleeve: UPM SH 12x50 K, UPM SH 12x85 K, UPM SH 16x85 K, UPM SH 16x130 K, UPM SH 20x85 K, UPM SH 20x130 K, UPM SH 20x200 K

Push through installation:

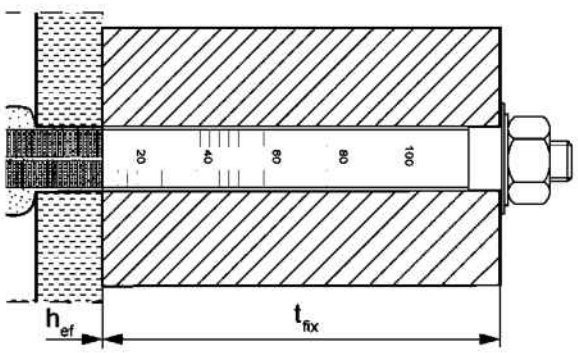

Installation with render bridge

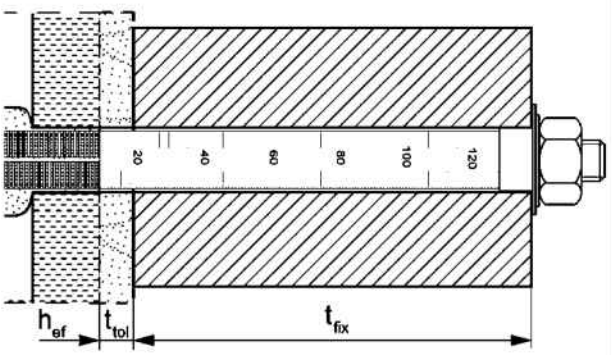

Size of the perforated sleeve: UPM SH 18x130/200 K, UPM SH 22x130/200 K

Internal threaded anchor UPM-I with perforated sleeve UPM SH K; Installation in perforated and solid brick masonry

Pre-positioned installation:

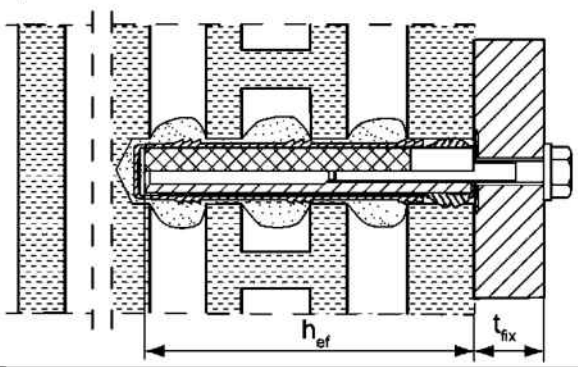

Figures not to scale

h_{ef} = effective anchorage depth

t_{tol} = thickness of unbearing layer (e.g. plaster)

t_{fix} = thickness of fixture

Upat injection system UPM 44 for masonry

Product description
Installation conditions part 1,
Anchor rods and internal threaded anchor with perforated sleeve

Annex A1
Appendix 3 / 153

Installation conditions part 2

Anchor rods without perforated sleeve UPM SH K;
installation in solid brick masonry and autoclaved aerated concrete

Pre-positioned installation:

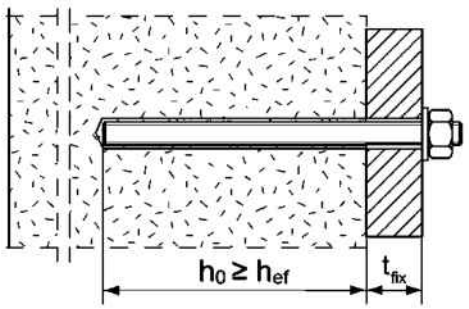

Push through installation: Annular gap filled with mortar

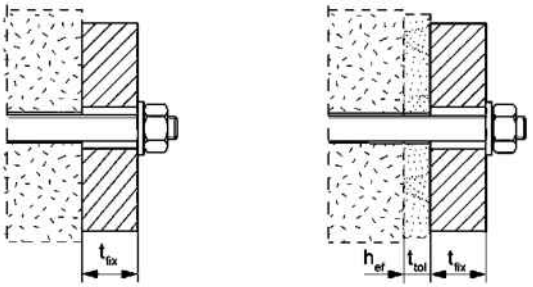

Installation with render bridge

Internal threaded anchors UPM-I without perforated sleeve UPM SH K;
installation in solid brick masonry and autoclaved aerated concrete

Pre-positioned installation:

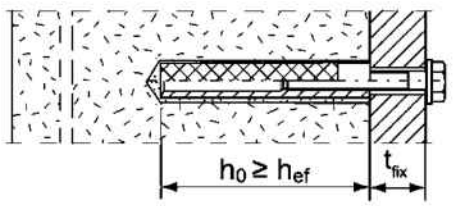

Installation with render bridge

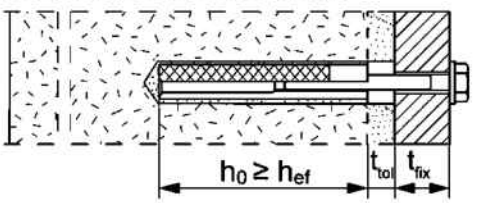

Anchor rods and internal threaded anchors UPM-I without perforated sleeve UPM SH K; installation with centring sleeve in autoclaved aerated concrete with conical drill hole (installation with special conic drill bit PBB)

Pre-positioned installation:
anchor rods M8, M10, M12

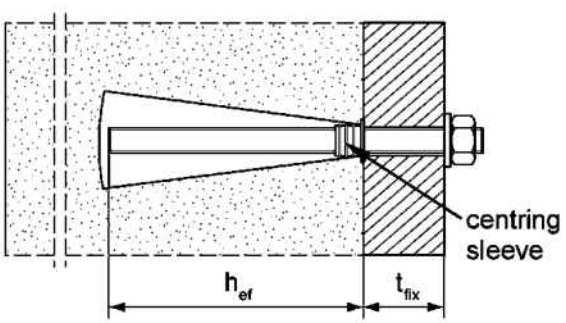

Pre-positioned installation:
Internal threaded anchor UPM-I 11x85 M6 / M8

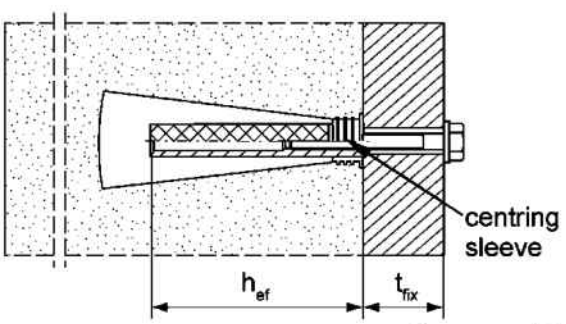

Figures not to scale

h_0 = depth of drill hole
h_{ef} = effective anchorage depth
t_{tol} = thickness of unbearing layer (e.g. plaster)
t_{fix} = thickness of fixture

Upat injection system UPM 44 for masonry

Product description
Installation conditions part 2, Anchor rods and internal threaded anchor without perforated sleeve / with centring sleeve

Annex A2
Appendix 4 / 153

Overview system components part 1

Mortar cartridge (shuttle cartridge) with sealing cap

1

Size: 360 ml, 825 ml

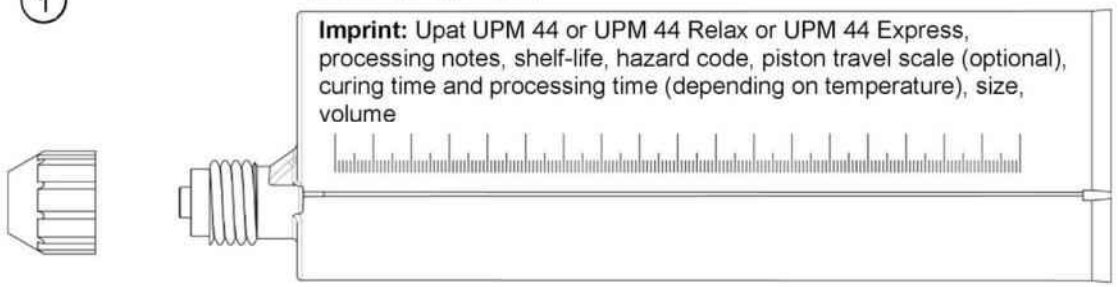

Mortar cartridge (coaxial cartridge) with sealing cap

1

Size: 100 ml, 150 ml, 300 ml, 380 ml, 400 ml, 410 ml

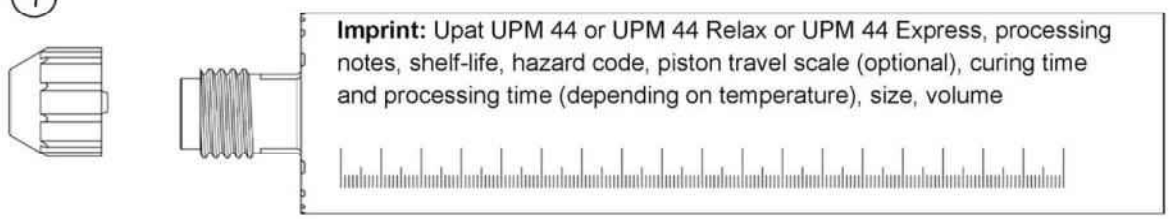

Static mixer Upat MR Plus for injection cartridges up to 410 ml

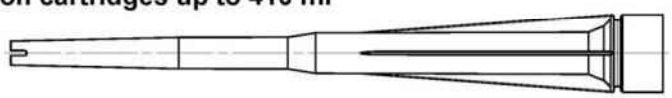

Static mixer Upat JMR for injection cartridges 825 ml

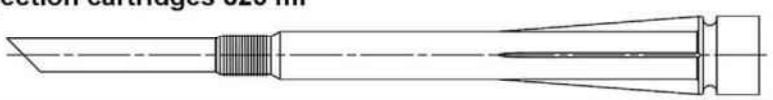

Extension tube Ø 9 for static mixer Upat MR Plus;
Extension tube Ø 9 or Ø 15 for static mixer Upat JMR



Cleaning brush UP BS

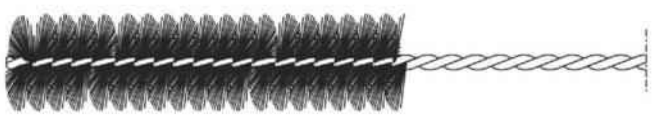

Blow-out pump UPM AB



compressed-air cleaning tool



Figures not to scale

Upat injection system UPM 44 for masonry

Product description
Overview system components part 1: cartridge / static mixer / cleaning tools

Annex A3
Appendix 5 / 153

Overview system components part 2

Upat anchor rod

(2) 

Size: M6, M8, M10, M12, M16

Internal threaded anchor UPM-I

(5) 

Size: 11x85 M6 / M8
15x85 M10 / M12

Perforated sleeve UPM SH K

(7) 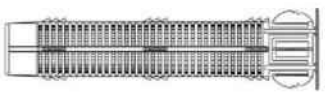

Size: UPM SH 12x50 K
UPM SH 12x85 K
UPM SH 16x85 K
UPM SH 20x85 K

(7) 

Size: UPM SH 16x130 K
UPM SH 20x130 K
UPM SH 20x200 K

Perforated sleeve UPM SH K (push through installation)

(7) 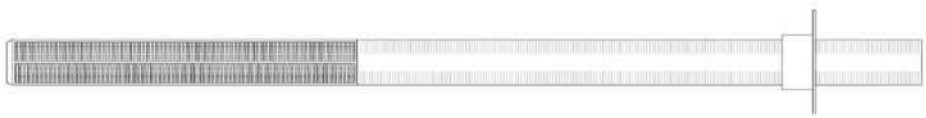

Size:
UPM SH 18x130/200 K
UPM SH 22x130/200 K

Washer

(3) 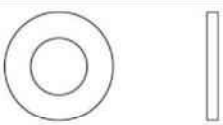

Hexagon nut

(4) 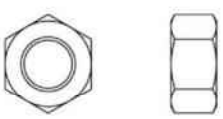

Injection adapter

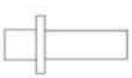

centring sleeve PBZ

(7) 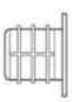

Special conic drill bit PBB

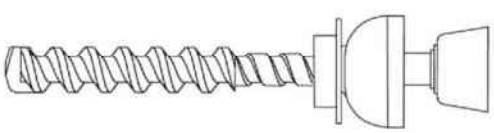



Figures not to scale

Upat injection system UPM 44 for masonry

Product description
Overview system components part 2: steel parts / perforated sleeve / conical drill bit / Injection adapter / centring sleeve

Annex A4
Appendix 6 / 153

Table A5.1: Materials

Part	Designation	Material		
1	Mortar cartridge	Mortar, hardener; filler		
		Steel	Stainless steel R	High corrosion resistant steel HCR
		zinc plated	acc. to EN 10088-1:2023 Corrosion resistance class CRC III acc. to EN 1993-1-4:2006+A1:2015	acc. to EN 10088-1:2023 Corrosion resistance class CRC V acc. to EN 1993-1-4:2006+A1:2015
2	Anchor rod	Property class 4.6; 4.8; 5.8 or 8.8; EN ISO 898-1: 2013 zinc plated ≥ 5µm, ISO 4042:2022 or hot-dip galvanised EN ISO 10684:2004+AC:2009 $f_{uk} \leq 1000$ N/mm² $A_5 > 8\%$ fracture elongation	Property class 50, 70 or 80 EN ISO 3506-1:2020 1.4401; 1.4404; 1.4578; 1.4571; 1.4439; 1.4362; 1.4062; 1.4662; 1.4462; EN 10088-1:2023 $f_{uk} \leq 1000$ N/mm² $A_5 > 8\%$ fracture elongation	Property class 50 or 80 EN ISO 3506-1:2020 or property class 70 with f_{yk}= 560 N/mm² 1.4565; 1.4529 EN 10088-1:2023 $f_{uk} \leq 1000$ N/mm² $A_5 > 8\%$ fracture elongation
3	Washer ISO 7089:2000	zinc plated ≥ 5µm, ISO 4042:2022 or hot-dip galvanised EN ISO 10684:2004+AC:2009	1.4401; 1.4404; 1.4578; 1.4571; 1.4439; 1.4362; EN 10088-1:2023	1.4565;1.4529 EN 10088-1:2023
4	Hexagon nut	Property class 5 or 8; EN ISO 898-2:2022 zinc plated ≥ 5µm, ISO 4042:2022 or hot-dip galvanised EN ISO 10684:2004+AC:2009	Property class 50, 70 or 80 EN ISO 3506-2:2020 1.4401; 1.4404; 1.4578; 1.4571; 1.4439; 1.4362; EN 10088-1:2023	Property class 50, 70 or 80 EN ISO 3506-2:2020 1.4565; 1.4529 EN 10088-1:2023
5	Internal threaded anchor UPM-I	Property class 5.8; EN ISO 898-1:2013 zinc plated ≥ 5µm, ISO 4042:2022	Property class 70 EN ISO 3506-1:2020 1.4401; 1.4404; 1.4578; 1.4571; 1.4439; 1.4362; EN 10088-1:2023	Property class 70 EN ISO 3506-1:2020 1.4565; 1.4529 EN 10088-1:2023
6	Commercial standard screw or threaded rod for internal threaded anchor UPM-I	Property class 4.6, 5.8 or 8.8; EN ISO 898-1:2013 zinc plated ≥ 5µm, ISO 4042:2022	Property class 70 EN ISO 3506-1:2020 1.4401; 1.4404; 1.4578; 1.4571; 1.4439; 1.4362; EN 10088-1:2023	Property class 70 EN ISO 3506-1:2020 1.4565; 1.4529 EN 10088-1:2023
7	Perforated sleeve and centring sleeve	PP / PE		

Specifications of intended use part 1

Table B1.1: Overview use and performance categories

Anchorages subject to		Upat injection system UPM 44 for masonry	
Hole drilling with hammer drill mode		all bricks; without C32 to C51, C80 to C83	
Hole drilling with rotary drill mode		all bricks	
Hole drilling with special conic drill bit		Only C118 to C122	
Static and quasi static load, in masonry		all bricks	
Exposure to fire under tension and shear loading		C124 to C127 (Applies only to the conditions of dry masonry)	
Installation	Pre-positioned installation	Anchor rod or internal threaded anchor (in solid brick masonry and autoclaved aerated concrete)	Perforated sleeve with anchor rod or internal threaded anchor (in perforated and solid brick masonry) Size: UPM SH 12x50 K UPM SH 12x85 K UPM SH 16x85 K UPM SH 16x130 K UPM SH 20x85 K UPM SH 20x130 K UPM SH 20x200 K
	Push through installation	Anchor rod; use only in cylindrical drill hole (in solid brick masonry and autoclaved aerated concrete)	Perforated sleeve with anchor rod (in perforated and solid brick masonry) Size: UPM SH 18x130/200 K UPM SH 22x130/200 K
Installation and use conditions	conditions d/d (dry/dry)	all bricks	
	conditions w/d (wet/dry)		
	conditions w/w (wet/wet)		
Installation direction		D3 (downward and horizontal installation)	
Installation temperature		$T_{i,min}$ = -5 °C to $T_{i,max}$ = +40 °C	
In-service temperature	Temperature range Tb	-40 °C to +80 °C	(max. short term temperature +80 °C max. long term temperature +50 °C)
	Temperature range Tc	-40 °C to +120 °C	(max. short term temperature +120 °C; max. long term temperature +72 °C)

Specifications of intended use part 2

Anchorages subject to:

- Static and quasi-static loads
- Exposure to fire

Base materials:

- Solid brick masonry (base material group b) and autoclaved aerated concrete (base material group d), acc. to Annex B13 / B14.
- Hollow brick masonry (base material group c), according to Annex B13 / B14.
- For minimum thickness of masonry member is h_{ef}+30mm.
- Mortar strength class of the masonry M2,5 at minimum according to EN 998-2:2016.
- For other bricks in solid masonry, hollow or perforated masonry and autoclaved aerated concrete, the characteristic resistance of the anchor may be determined by job site tests (not for bricks under fire exposure) according to EOTA Technical Report TR 053:2022-07 under consideration of the β-factor according to Annex C123, Table C123.1.

  Note (only applies to solid bricks and autoclaved aerated concrete):
  The characteristic resistance is also valid for larger brick sizes, higher compressive strength and higher raw density of the masonry unit.

Temperature Range:

- **Tb:** From - 40°C to +80°C (max. short term temperature +80°C and max. long term temperature +50°C)
- **Tc:** From -40°C to +120°C (max. short term temperature +120°C and max. long term temperature +72°C)

Use conditions (Environmental conditions):

- Structures subject to dry internal conditions (zinc plated steel, stainless steel or high corrosion resistant steel)
- For all other conditions according to EN 1993-1-4:2006+A1:2015 corresponding to corrosion resistance classes to Annex A5, Table A5.1.

Specifications of intended use part 3 continued

Design:

- The anchorages have to be designed in accordance with EOTA Technical Report TR 054:2023-12 (included the dimensioning for fire exposure), Design method A under the responsibility of a designer experienced in anchorages and masonry work.

  Applies to all bricks, if no other values are specified:

  $N_{Rk} = N_{Rk,b} = N_{Rk,p} = N_{Rk,b,c} = N_{Rk,p,c}$

  $V_{Rk} = V_{Rk,b} = V_{Rk,c,II} = V_{Rk,c,\perp}$

  For the calculation of pulling out a brick under tension loading $N_{Rk,pb}$ or pushing out a brick under shear loading $V_{Rk,pb}$ see EOTA Technical Report TR 054:2023-12.

  $N_{Rk,s}$, $V_{Rk,s}$ and $M^0_{Rk,s}$ see annexes C1-C3.

  Factors for job site tests and displacements see annex C123.

- Verifiable calculation notes and drawings have to be prepared taking into account the relevant masonry in the region of the anchorage, the loads to be transmitted and their transmission to the supports of the structure. The position of the anchor is to be indicated on the design drawings.

Installation:

- Conditions d/d: - Installation and use in dry structures.
- Conditions w/w:- Installation and use in dry and wet structures.
- Conditions w/d: - Installation in wet structures and use in dry structures.
- Hole drilling see Annex C (drilling method).
- In case of aborted hole: The hole shall be filled with injection mortar UPM 44.
- Bridging of unbearing layer (e.g., plaster) is permitted for masonry with solid bricks and cylindrical drill hole. At perforated brick masonry see Annex B6, Table B6.1.
- Anchor installation carried out by appropriately qualified personnel and under the supervision of the person responsible for technical matters of the site.
- Fastening screws or anchor rods (including nut and washer) must comply with the appropriate material and property class of the Upat internal threaded anchor UPM-I mentioned in Annex A5, Table A5.1.
- Minimum curing time see Annex B8, Table B8.2.
- Commercial standard threaded rods, washers and hexagon nuts may also be used if the following requirements are fulfilled:

  Material dimensions and mechanical properties of the metal parts according to the specifications are given in Annex A5, Table A5.1

  Conformation of material and mechanical properties of the metal parts by inspection certificate 3.1 according to EN 10204:2004, the documents shall be stored.

  Marking of the anchor rod with the envisage embedment depth. This may be done by the manufacturer of the rod or by a person on job site.

Table B4.1: Installation parameters for anchor rods in solid bricks and autoclaved aerated concrete without perforated sleeves

Anchor rod	Thread	M6	M8	M10	M12	M16
Nominal drill hole diameter	d_0 [mm]	8	10	12	14	18
Effective anchorage depth h_{ef} [1] in AAC cylindrical drill hole	$h_{0,min} \geq h_{ef,min}$ [mm]	100				
	$h_{0,max} \geq h_{ef,max}$ [mm]	h-30, ≤200				
Effective anchorage depth h_{ef} in AAC conical drill hole	h_0 [mm]	-	h_{ef} + 5			-
	$h_{ef,1}$ [mm]		75			
	$h_{ef,2}$ [mm]		95			
Effective anchorage depth h_{ef} [1] in solid brick (depth of drill hole $h_0 \geq h_{ef}$)	$h_{ef,min}$ [mm]	50				
	$h_{ef,max}$ [mm]	h-30, ≤200				
Diameter of clearance hole in the fixture	pre-positioning $d_f \leq$ [mm]	7	9	12	14	18
	push through $d_f \leq$ [mm]	9	11	14	16	20
Diameter of cleaning brush	$d_b \geq$ [mm]	see Table B8.1				
Maximum installation torque	T_{inst} [Nm]	see parameters of brick				

[1] $h_{ef,min} \leq h_{ef} \leq h_{ef,max}$ is possible.

Upat anchor rods M6, M8, M10, M12, M16

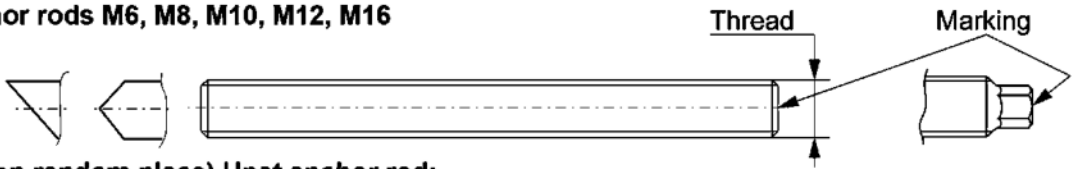

Marking (on random place) Upat anchor rod:

Steel zinc plated PC[1] 8.8	• or +	Steel hot-dip galvanised PC[1] 8.8	•
High corrosion resistant steel HCR PC[1] 50	•	High corrosion resistant steel HCR PC[1] 70	–
High corrosion resistant steel HCR PC[1] 80	(	Stainless steel R property class 50	~
Stainless steel R property class 80	*		

Alternatively: Colour coding according to DIN 976-1: 2016; property class 4.6 marking according to EN ISO 898-1:2013

[1] PC = property class

Installation conditions:

Anchor rod in cylindrical drill hole

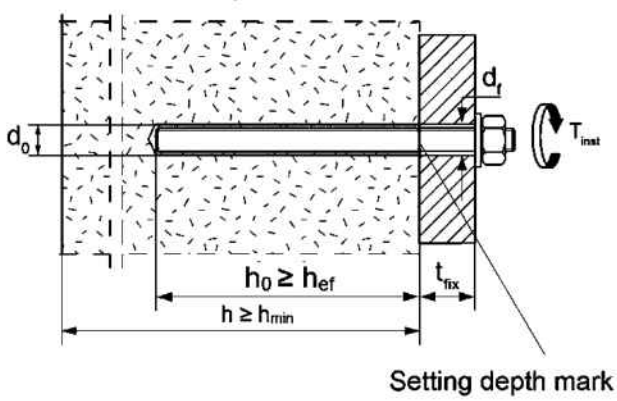

Anchor rod in conical drill hole

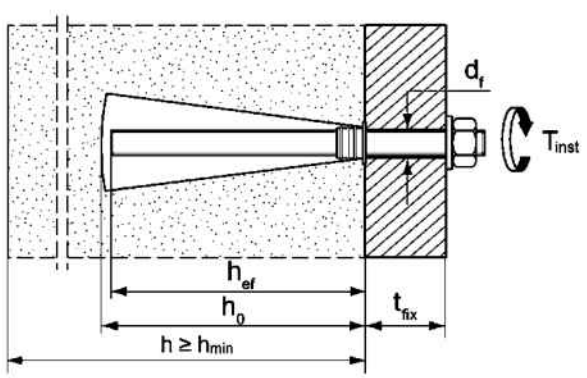

Figures not to scale

Upat injection system UPM 44 for masonry

Intended Use
Installation parameters for anchor rods without perforated sleeve

Annex B4
Appendix 11 / 153

Table B5.1: Installation parameters for internal threaded anchors UPM-I in solid bricks and autoclaved aerated concrete without perforated sleeves

Internal threaded anchor UPM-I		11x85 M6	11x85 M8	15x85 M10	15x85 M12
Diameter of anchor	d_H [mm]	11		15	
Nominal drill hole diameter	d_0 [mm]	14		18	
Length of anchor	L_H [mm]	85			
Effective anchorage depth	$h_0 \geq h_{ef}$ [mm]	85			
Effective anchorage depth h_{ef} in AAC (conical drill hole)	h_0 [mm]	100		-	
	h_{ef} [mm]	85			
Diameter of cleaning brush	$d_b \geq$ [mm]	see Table B8.1			
Maximum installation torque	T_{inst} [Nm]	see parameters of brick			
Diameter of clearance hole in the fixture	d_f [mm]	7	9	12	14
Screw-in depth	$l_{E,min}$ [mm]	6	8	10	12
	$l_{E,max}$ [mm]	60			

Upat Internal threaded anchor UPM-I

UPM-I 11x85 M6, UPM-I 11x85 M8

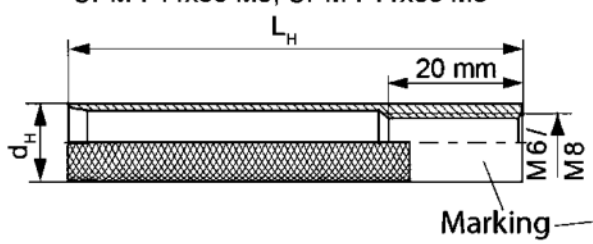

UPM-I 15x85 M10, UPM-I 15x85 M12

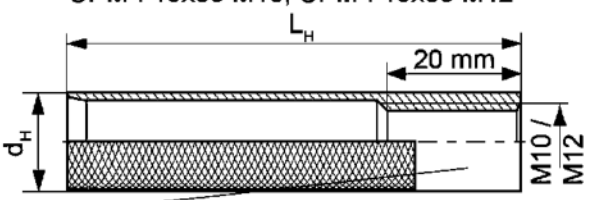

Marking:

Size, e.g. **M8**, Stainless steel: R, e.g. **M8 R**, High corrosion resistant steel: HCR, e.g. **M8 HCR**

Installation conditions:

Internal threaded anchor in cylindrical drill hole

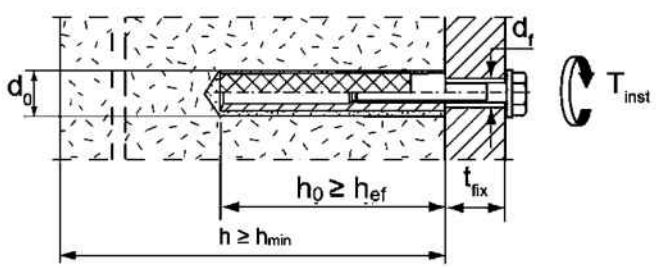

Internal threaded anchor in conical drill hole

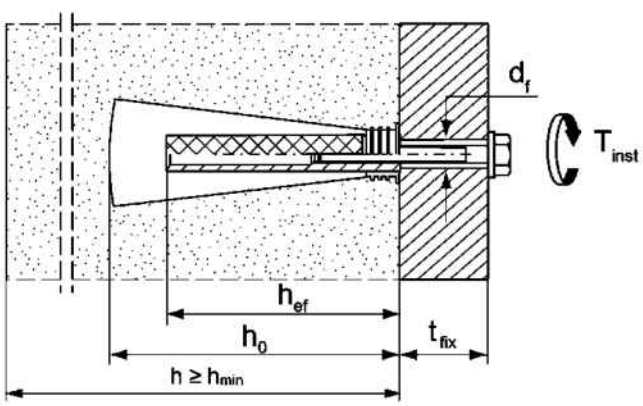

Figures not to scale

Upat injection system UPM 44 for masonry

Intended Use
Installation parameters for internal threaded rods UPM-I without perforated sleeve

Annex B5
Appendix 12 / 153

Table B6.1: Installation parameters for anchor rods and internal threaded anchors UPM-I with perforated sleeves (pre-positioned installation)

perforated sleeve UPM SH K		12x50	12x85[2)]	16x85	16x130[2)]	20x85	20x130[2)]	20x200[2)]
Nominal drill hole diameter $d_0 = D_{sleeve,nom}$	d_0 [mm]	12		16		20		
Depth of drill hole	h_0 [mm]	55	90	90	135	90	135	205
Effective anchorage depth	$h_{ef,min}$ [mm]	50	65	85	110	85	110	180
	$h_{ef,max}$ [mm]	50	85	85	130	85	130	200
Size of threaded rod	[-]	M6 and M8		M8 and M10		M12 and M16		
Size of internal threaded anchor UPM-I		-	-	11x85	-	15x85	-	-
Diameter of cleaning brush[1)]	$d_b \geq$ [mm]	see Table B8.1						
Maximum installation torque	T_{inst} [Nm]	see parameters of brick						

[1)] Only for solid areas in hollow bricks and solid bricks.

[2)] Bridging of unbearing layer (e.g. plaster) is possible. When reducing the effective anchorage depth $h_{ef,min}$, the values of the next shorter perforated sleeve of the same diameter must be used. The smaller value of charastereristic resistance must be taken.

Perforated sleeve

UPM SH 12x50 K; UPM SH 12x85 K; UPM SH 16x85 K; UPM SH 16x130 K;
UPM SH 20x85 K; UPM SH 20x130 K; UPM SH 20x200 K

Marking:
Size $D_{sleeve,nom}$ x L_{sleeve}
(e.g.: 16x85)

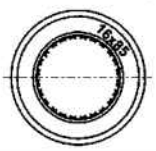

$D_{sleeve,nom}$

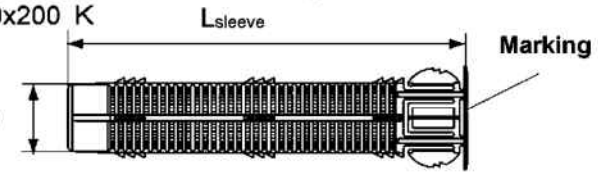

Upat Internal threaded anchor UPM-I

UPM-I 11x85 M6, UPM-I 11x85 M8

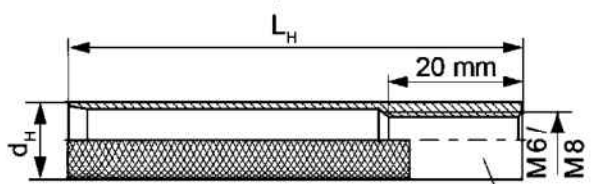

UPM-I 15x85 M10, UPM-I 15x85 M12

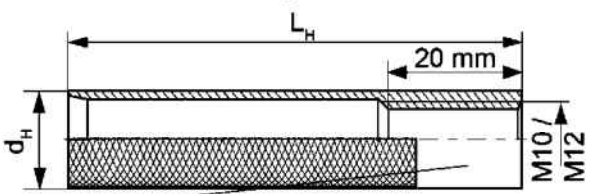

Marking

Installation conditions:

Anchor rod with perforated sleeve

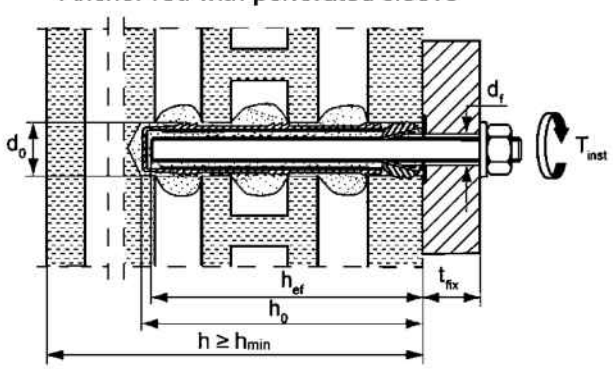

Internal threaded anchor with perforated sleeve

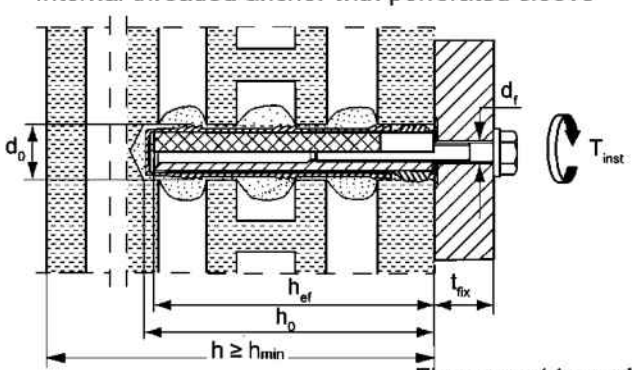

Figures not to scale

Upat injection system UPM 44 for masonry

Intended Use
Installation parameters for anchor rods and internal threaded anchors UPM-I with perforated sleeve (pre-positioned installation)

Annex B6

Table B7.1: Installation parameters for anchor rods with perforated sleeves (push through installation)

Perforated sleeve UPM SH K		**18x130/200**		**22x130/200**
Nominal sleeve diameter	$D_{sleeve,nom}$ [mm]	16		20
Nominal drill hole diameter	d_0 [mm]	18		22
Depth of drill hole	h_0 [mm]	135		
Effective anchorage depth	h_{ef} [mm]	≥130		
Diameter of cleaning brush [1]	$d_b \geq$ [mm]	see Table B8.1		
Size of threaded rod	[-]	M10	M12	M16
Maximum installation torque	T_{inst} [Nm]	see parameters of brick		
Thickness of fixture	$t_{fix,max}$ [mm]	200		

[1] Only for solid areas in hollow bricks and solid bricks.

Perforated sleeve

UPM SH 18x130/200 K; UPM SH 22x130/200 K

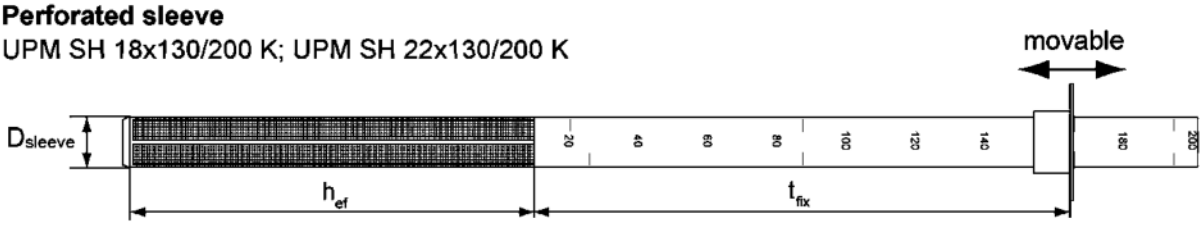

Installation conditions:

Anchor rod with perforated sleeve

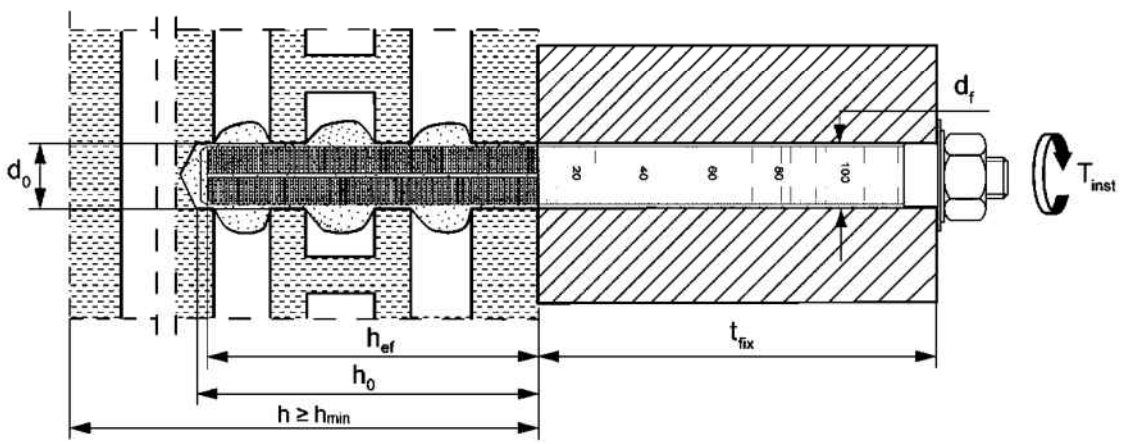

Figures not to scale

Upat injection system UPM 44 for masonry

Intended Use
Installation parameters for anchor rods with perforated sleeves (push through installation)

Annex B7
Appendix 14 / 153

Table B8.1: Parameters of the cleaning brush UP BS (steel brush with steel bristles)

The size of the cleaning brush refers to the drill hole diameter

Drill hole diameter	d_0 [mm]	8	10	12	14	16	18	20	22
Brush diameter	d_b [mm]	9	11	14	16	20	20	25	25

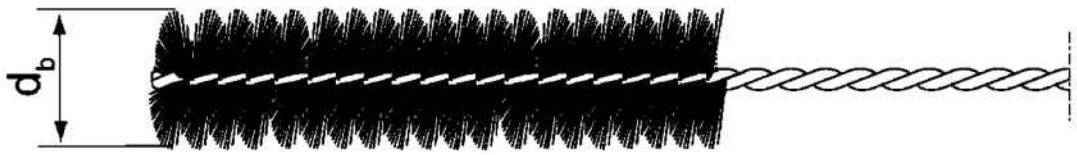

Only for solid bricks and autoclaved aerated concrete or solid areas of perforated bricks and hollow blocks

Table B8.2: Maximum processing times and minimum curing times
(During the curing time of the mortar the masonry temperature may not fall below the listed minimum temperature)

Temperature at anchoring base [°C]	Maximum processing time [2] t_{work}			Minimum curing time [1), 2)] t_{cure}		
	UPM 44 Express	UPM 44	UPM 44 Relax	UPM 44 Express	UPM 44	UPM 44 Relax
> -5 to 0	5 min	> 13 min	-	3 h	24 h	-
> 0 to 5	5 min	13 min	> 20 min	3 h	3 h	6 h
> 5 to 10	3 min	9 min	20 min	50 min	90 min	3 h
> 10 to 20	1 min	5 min	10 min	30 min	60 min	2 h
> 20 to 30	-	4 min	6 min	-	45 min	60 min
> 30 to 40	-	2 min	4 min	-	35 min	30 min

[1] For wet bricks the curing time must be doubled.

[2] Minimum cartridge temperature +5°C.

Figures not to scale

Installation instruction part 1

Installation in solid brick and autoclaved aerated concrete (without perforated sleeve)

1	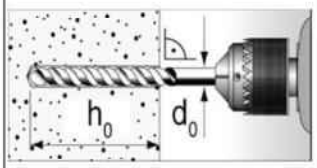	Drill the hole (drilling method see Annex C of the respective brick) depth of drill hole $\mathbf{h_0}$ and drill hole diameter $\mathbf{d_0}$ see **Table B4.1; B5.1**.		
2	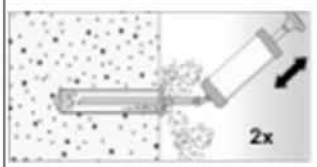	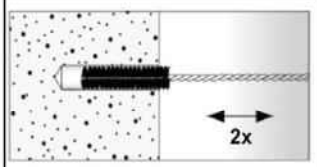	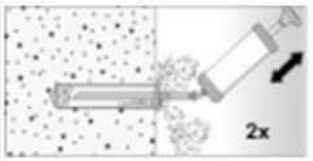	Blow out the drill hole twice. Brush twice and blow out twice again.
3	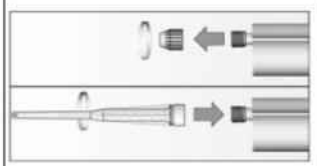	Remove the sealing cap. Screw on the static mixer. (the spiral in the static mixer must be clearly visible).		
4	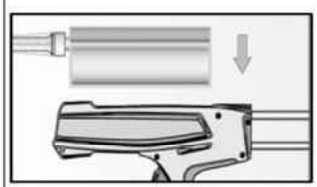	Place the cartridge into a suitable dispenser.	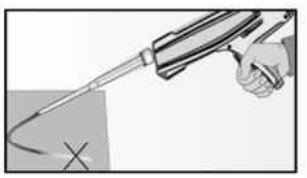	Press out approximately 10 cm of mortar until the resin is permanently grey in colour. Mortar which is not grey in colour will not cure and must be disposed of.
5	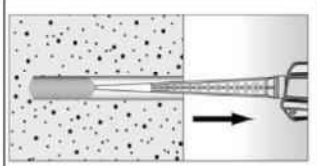	Fill approximetly 2/3 of the drill hole with mortar beginning from the bottom of the hole[1]. Avoid bubbles!	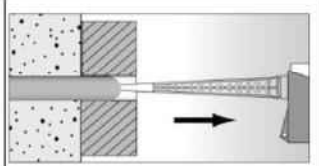	For push through installation fill the annular clearance with mortar.
6	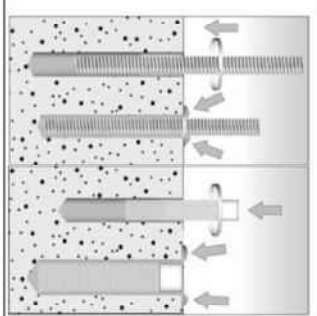	Only use clean and oil-free metal parts. Mark the anchor rod for setting depth. Insert the anchor rod or internal threaded anchor UPM-I by hand using light turning motions. When reaching the setting depth marking, excess mortar must emerge from the mouth of the drill hole.		
7		Do not touch. Minimum curing time see **Table B8.2**.	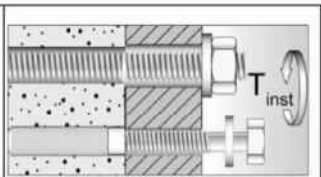	Mounting the fixture. max T_{inst} see parameter of brick in **Annex C**.

[1] Exact volume of mortar see manufacturer´s specification.

Installation instruction part 2

Installation in perforated or solid brick with perforated sleeve (pre-positioned installation)

1	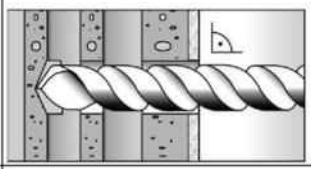	Drill the hole (drilling method see Annex C of the respective brick). depth of drill hole h_0 and drill hole diameter d_0 see **Table B6.1**	When install perforated sleeves in solid bricks or solid areas of hollow bricks, also clean the hole by blowing out and brushing.	
2	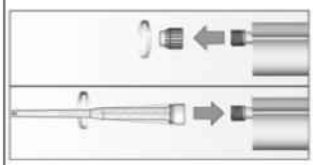	Remove the sealing cap. Screw on the static mixer. (the spiral in the static mixer must be clearly visible).		
3	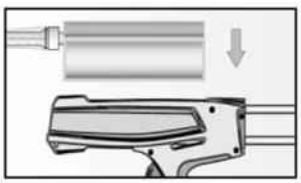	Place the cartridge into a suitable dispenser.	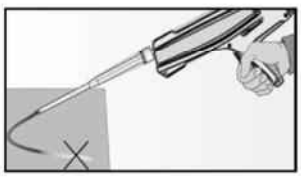	Press out approximately 10 cm of mortar until the resin is permanently grey in colour. Mortar which is not grey in colour will not cure and must be disposed of.
4	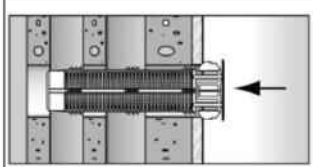	Insert the perforated sleeve flush with the surface of the masonry or plaster.	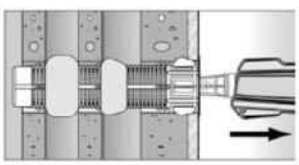	Fill the perforated sleeve completely with mortar beginning from the bottom of the hole[1].
5	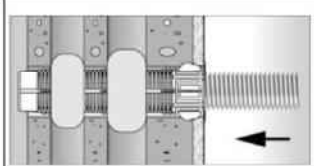	Only use clean and oil-free metal parts. Mark the ancher rod for setting depth. Insert the anchor rod or the internal threaded anchor UPM-I by hand using light turning motions until reaching the setting depth marking (anchor rod) or flush with the surface (internal threaded anchor).		
6		Do not touch. Minimum curing time see **Table B8.2**	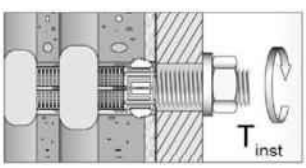	Mounting the fixture. max T_{inst} see parameter of brick in **Annex C**.

[1] Exact volume of mortar see manufacturer´s specification.

Installation instruction part 3

Installation in perforated or solid brick with perforated sleeve (push through installation)

1	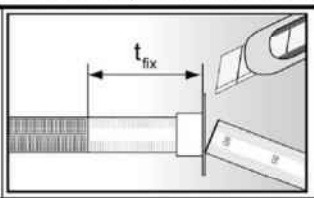	Push the movable stop up to the correct thickness of fixture and cut the overlap.	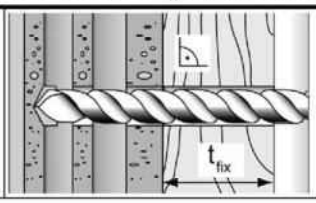	Drill the hole through the fixture. Depth of drill hole **(h_0 + t_{fix})** and drill hole diameter see **Table B7.1**.
2	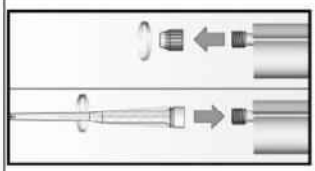	Remove the sealing cap. Screw on the static mixer. (the spiral in the static mixer must be clearly visible).		
3	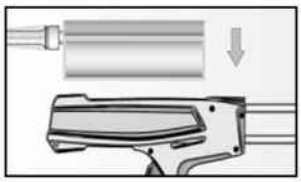	Place the cartridge into a suitable dispenser.	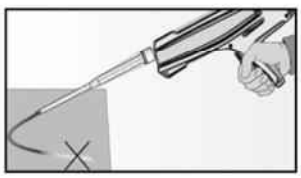	Press out approximately 10 cm of mortar until the resin is permanently grey in colour. Mortar which is not grey in colour will not cure and must be disposed of.
4	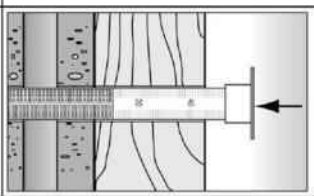	Insert the perforated sleeve flush with the surface of the fixture into the drill hole.	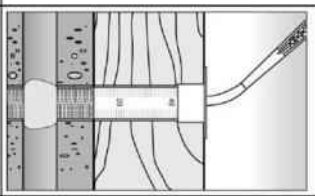	Fill the sleeve with mortar beginning from the bottom of the hole.[1] For deep drill holes use an extension tube.
5	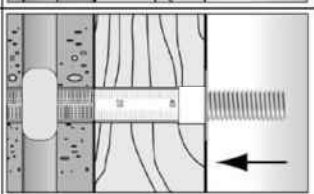	Only use clean and oil-free metal parts. Mark the anchor rod for setting depth. Insert the anchor rod or the internal threaded anchor UPM-I by hand using light turning motions until reaching the setting depth marking (anchor rod) or flush with the surface (internal threaded anchor).		
6		Do not touch. Minimum curing time see **Table B8.2**.	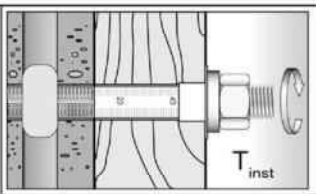	Mounting the fixture. max T_{inst} see parameter of brick in **Annex C**.

[1] Exact volume of mortar see manufacturer´s specification.

Installation instruction part 4

Installation in autoclaved aerated concrete with special conic drill bit PBB (pre-positioned installation)

1	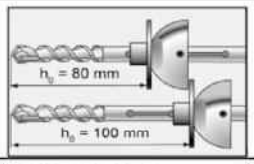	Position the movable drill bit arrester on the used drill hole depth (see **Table B4.1**). For this, unlock the clamp screw and slide the arrester. Now fix the clamp screw.		
2	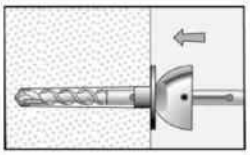	Drill the cylindrical hole with rotating drill until the arrester contact the material surface (drilling method see Annex C of the respective brick).		
3	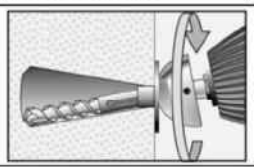	Deviate the working power drill circulate to generate an conic undercut in the material.		
4	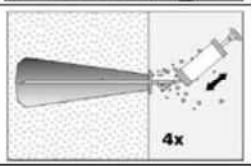	Blow out the drill hole four times.		
5	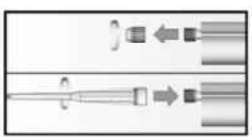	Remove the sealing cap. Screw on the static mixer. (the spiral in the static mixer must be clearly visible).		
6	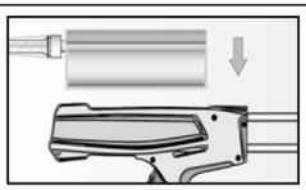	Place the cartridge into a suitable dispenser.		Press out approximately 10 cm of mortar until the resin is permanently grey in colour. Mortar which is not grey in colour will not cure and must be disposed of.
7	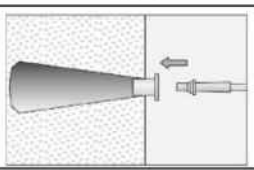	Put the center sleeve into the drill hole and adapt the injection adapter onto the static mixer.	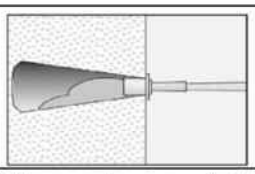	Fill the drill hole with injection mortar.
8	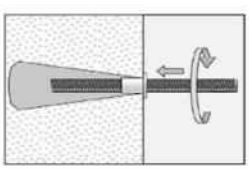	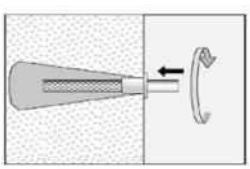	Only use clean and oil-free metal parts. Mark the anchor rod for setting depth. Insert the anchor rod or internal threaded anchor UPM-I by hand using light turning motions. When reaching the setting depth marking, excess mortar must emerge from the mouth of the drill hole.	
9		Do not touch. Minimum curing time see **Table B8.2**.	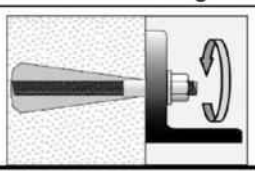	Mounting the fixture. max T_{inst} see parameter of brick **in Annex C**.

Upat injection system UPM 44 for masonry

Intended Use
Installation instruction for autoclaved aerated concrete with special conic drill bit PBB (pre-positioned installation) part 4

Annex B12

Table B13.1: Overview of assessed bricks part 1

Kind of masonry	Brick format [mm]	Mean compressive strength [N/mm²]	Main country of origin	Mean gross density ρ [kg/dm³]	Annex
Solid brick Mz					
Solid brick Mz	**NF** ≥240x115x71	15 / 25 / 35	Germany	≥1,8	C4 – C7
	2DF ≥240x115x113	12,5 / 20	Germany	≥1,8	C8 / C9
	≥ 245x118x54	12,5 / 25	Italy	≥1,8	C10 / C11
	≥ 230x108x55	12,5 / 25	Denmark	≥1,8	C12 / C13
Solid calcium silicate (sand- lime) brick KS / perforated calcium silicate (sand- lime) brick KSL					
Solid calcium silicate brick KS	**NF** ≥240x115x71	15 / 25 / 35	Germany	≥2,0	C14 / C15
	8DF ≥ 250x240x240	12,5 / 25 / 35	Germany	≥2,0	C16 / C17
	≥ 997x214x538	12,5 / 25 & 45	Netherlands	≥1,8 & ≥2,2	C18 / C19
	≥ 240x115x113	12,5 / 25	Germany	≥1,8	C20 – C23
Perforated calcium silicate brick KSL	**3DF** 240x175x113	10 / 12,5 / 15 / 20 / 25	Germany	≥1,4	C24 – C27
Vertical perforated brick HLz					
Vertical perforated brick HLz	370x240x237	5 / 7,5 / 10 / 12,5 / 15	Germany	≥1,0	C28 / C29
	500x175x237	5 / 7,5 / 10 / 12,5 / 15	Germany	≥1,0	C28 / C29
	2DF 240x115x113	7,5 / 12,5 / 20 / 25 / 35	Germany	≥1,4	C30 / C31
	248x365x248	5 / 7,5 / 10	Germany	≥0,6	C32 – C35
	248x365x249	10 / 12,5 / 15	Germany	≥0,7	C36 – C39
	248x365x249	5 / 8	Germany	≥0,5	C40 – C43
	248x425x248	5 / 8 / 10	Germany	≥0,8	C44 – C47
	248x425x248	5 / 7,5 / 10	Germany	≥0,8	C48 – C51
	500x200x315	5 / 7,5 / 10	Germany	≥0,6	C52 – C55
	500x200x300	5 / 7,5 / 10 / 12,5	France	≥0,7	C56 – C59
	500x200x315	2,5 / 5 / 7,5 / 10	France	≥0,7	C60 – C63
	560x200x275	5 / 8 / 10	France	≥0,7	C64 / C65
	255x120x118	2,5 / 5 / 8 / 10 / 12,5 / 15	Italy	≥1,0	C66 - C68
	275x130x94	7,5 / 10 / 15 / 20 / 25	Spain	≥0,8	C69 / C71
	220x190x290	7,5 / 10 / 12,5	Portugal	≥0,7	C72 – C75
	253x300x240	2,5 / 5 / 8	Austria	≥0,8	C76 – C79
	250x440x250	8 / 10 / 12,5	Austria	≥0,7	C80 – C83
	230x108x55	2,5 / 5 / 8 / 10	Denmark	≥1,4	C84 / C85
	365x248x245	10	Austria	≥0,6	C86 / C89
	240x175x113	12,5	Germany	≥0,9	C90 / C93

Table B14.1: Overview of assessed bricks part 2

Kind of masonry	Brick format [mm]	Mean compressive strength [N/mm²]	Main country of origin	Mean gross density ρ [kg/dm³]	Annex
Horizontal perforated brick LLz					
Horizontal perforated brick LLz	248x78x250	2,5 / 5 / 8	Italy	≥0,7	C94 / C95
	128x88x275	2,5	Spain	≥0,8	C96 / C97
Light-weight concrete hollow block Hbl					
Light-weight concrete hollow block Hbl	362x240x240	2,5 / 5	Germany	≥1,0	C98 – C101
	500x200x200	2,5 / 5 / 8	France	≥1,0	C102 / C103
	440x215x215	5 / 8 / 10 / 12,5	Ireland	≥1,2	C104 – C107
Light-weight concrete solid block Vbl					
Light-weight concrete solid block Vbl	≥ 372x300x254	2,5	Germany	≥0,6	C108 / C109
	≥ 250x240x239	5 / 8 / 10	Germany	≥1,6	C110 – C113
	≥ 440x100x215	5 / 8 / 10 / 12,5	Ireland	≥2,0	C114 / C115
	≥ 440x95x215	7,5 / 10 / 12,5 / 15	England	≥2,0	C116 / C117
Autoclaved aerated concrete (AAC)					
PP2 / AAC	-	2,5	Germany	0,35	C118 – C122
PP4 / AAC	-	5	Germany	0,5	C118 – C122
PP6 / AAC	-	8	Germany	0,65	C118 – C122

Table B15.1: Overview dimensions of perforated and hollow bricks part 1

Solid calcium silicate brick KS, 8DF,
EN 771-2:2011+A1:2015 according to Annex C16

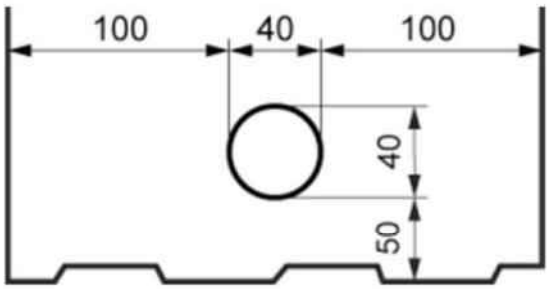

Perforated calcium silicate brick KSL, 3DF,
EN 771-2:2011+A1:2015; e.g. KS Wemding
according to Annex C24

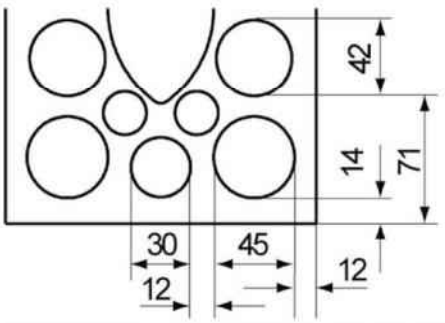

Vertical perforated brick HLz, EN 771-1:2011+A1:2015: e.g. Wienerberger, Poroton according to Annex C28

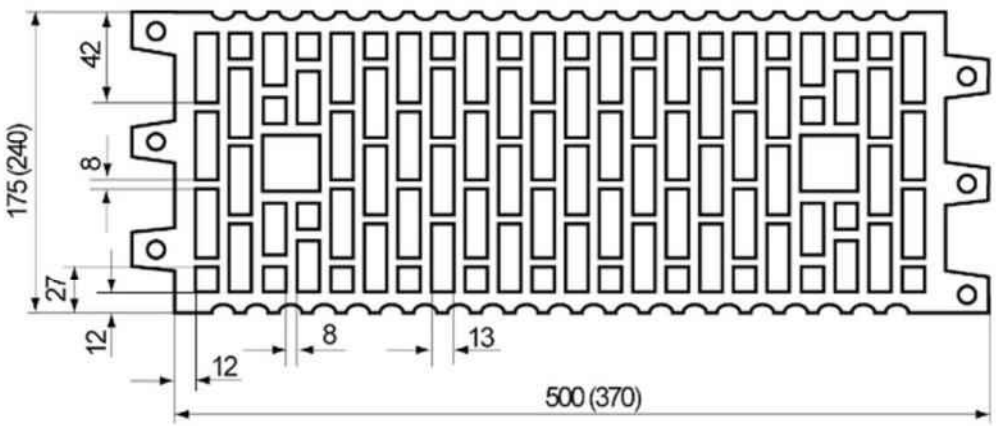

Vertical perforated brick HLz, 2DF,
EN 771-1:2011+A1:2015; e.g. Wienerberger
according to Annex C30

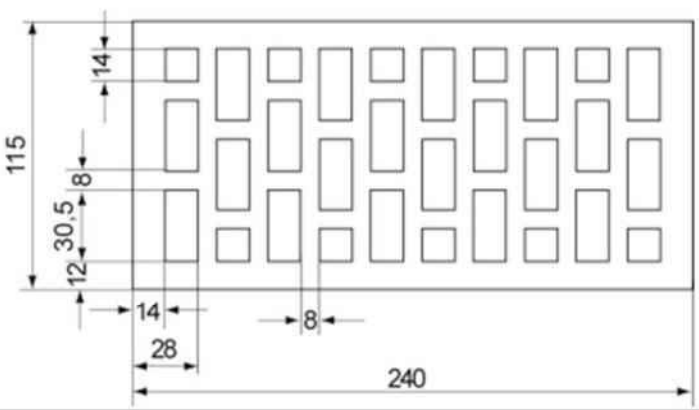

Vertical perforated brick HLz, U8,
EN 771-1:2011+A1:2015; according to Annex C32

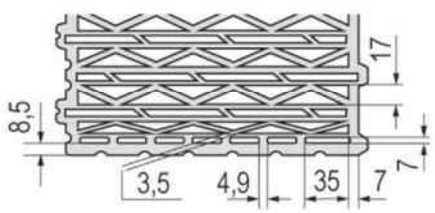

Measures in [mm]
Figures not to scale

Upat injection system UPM 44 for masonry

Intended Use
Overview dimensions of perforated and hollow bricks part 1

Annex B15
Appendix 22 / 153

Table B16.1: Overview dimensions of perforated and hollow bricks part 2

Vertical perforated brick HLz, T10, T11, EN 771-1:2011+A1:2015; according to Annex C36

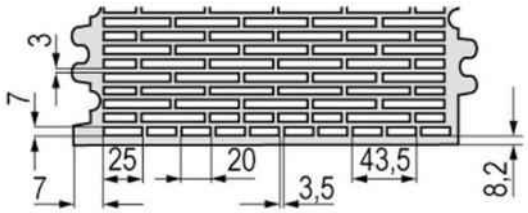

Vertical perforated brick HLz, T7 PF, filled with perlit, EN 771-1:2011+A1:2015; according to Annex C40

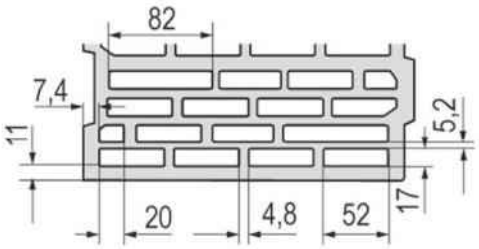

Vertical perforated brick HLz, T9 MW, filled with mineral wool, EN 771-1:2011+A1:2015; according to Annex C44

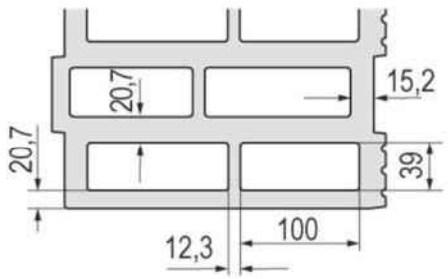

Vertical perforated brick HLz, FZ 7, filled with mineral wool, EN 771-1:2015; according to Annex C48

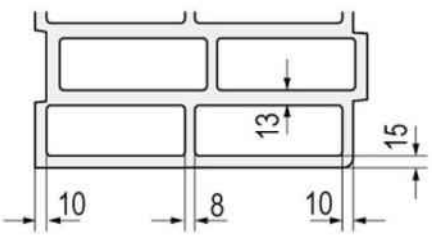

Vertical perforated brick HLz, EN 771-1:2011+A1:2015; e.g. Bouyer Leroux; According to Annex C52

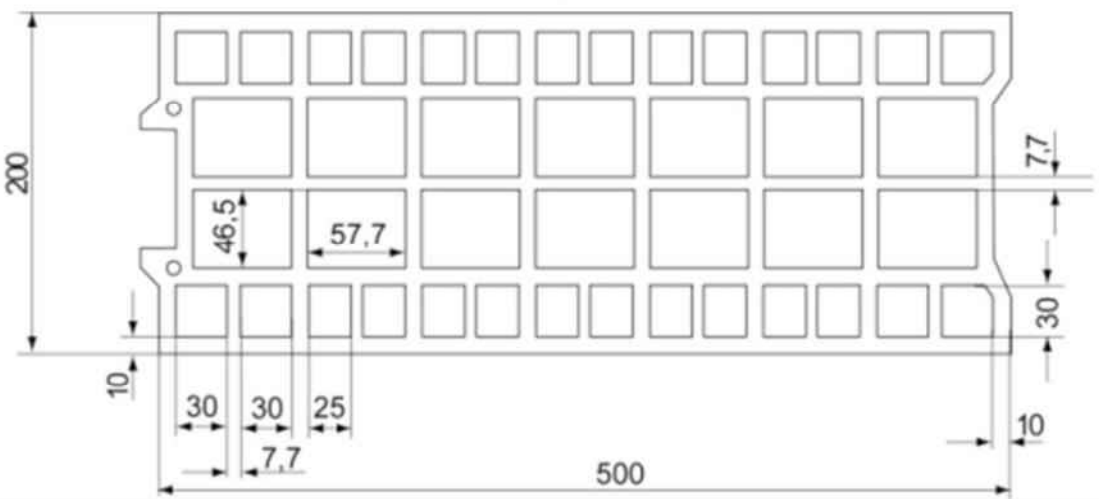

Measures in [mm]
Figures not to scale

Upat injection system UPM 44 for masonry

Intended Use
Overview dimensions of perforated and hollow bricks part 2

Annex B16
Appendix 23 / 153

Table B17.1: Overview dimensions of perforated and hollow bricks part 3

Vertical perforated brick HLz, EN 771-1:2011+A1:2015; e.g. Wienerberger according to Annex C56

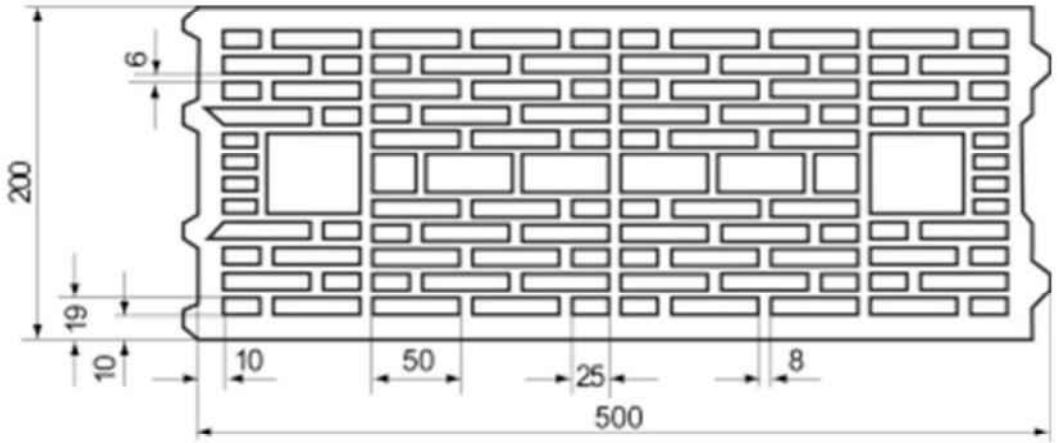

Vertical perforated brick HLz, EN 771-1:2011+A1:2015; e.g. Terreal according to Annex C60

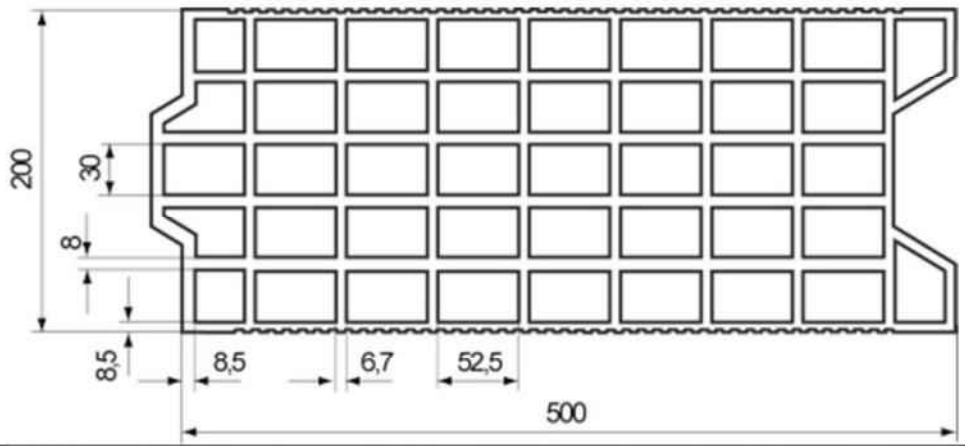

Vertical perforated brick HLz, EN 771-1:2011+A1:2015; e.g. Imery according to Annex C64

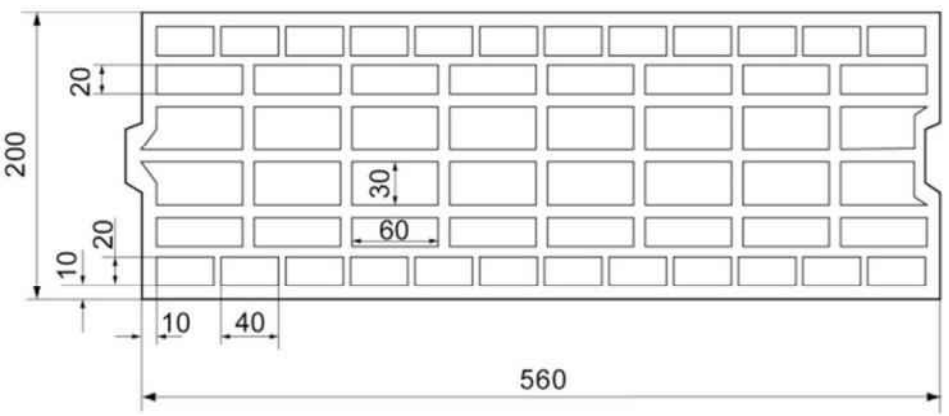

Measures in [mm]
Figures not to scale

Upat injection system UPM 44 for masonry

Intended Use
Overview dimensions of perforated and hollow bricks part 3

Annex B17
Appendix 24 / 153

Table B18.1: Overview dimensions of perforated and hollow bricks part 4

Vertical perforated brick HLz,
EN 771-1:2011+A1:2015;
e.g. Wienerberger according to Annex C66

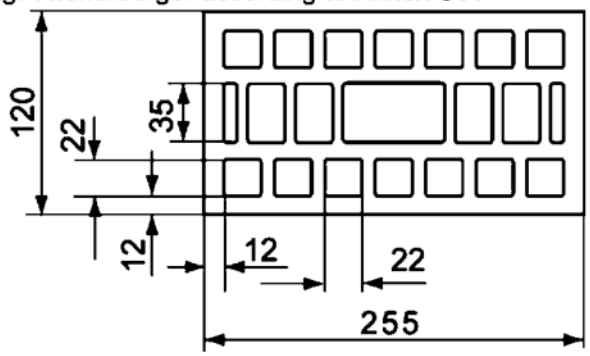

Vertical perforated brick HLz,
EN 771-1:2011+A1:2015;
e.g. Cermanica Farreny S.A. according to Annex C69

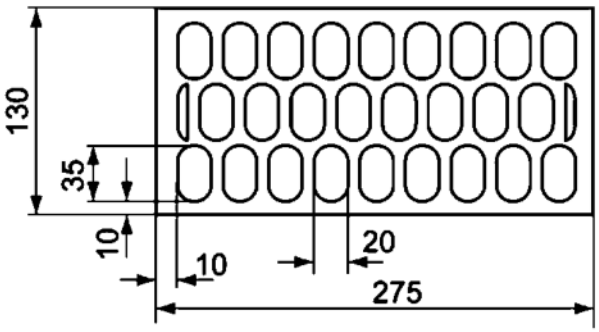

Vertical perforated brick HLz,
EN 771-1:2011+A1:2015;
e.g. Perceram according to Annex C72

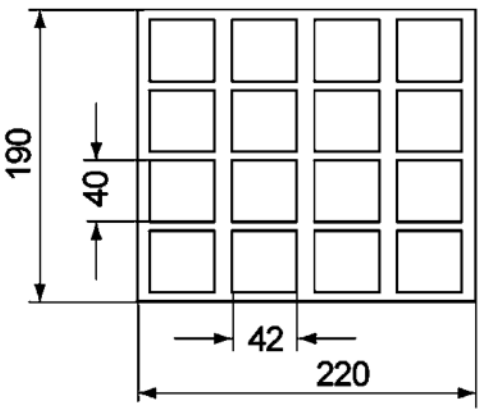

Vertical perforated brick HLz,
EN 771-1:2011+A1:2015;
e.g. Ziegelwerk Brenna according to Annex C76

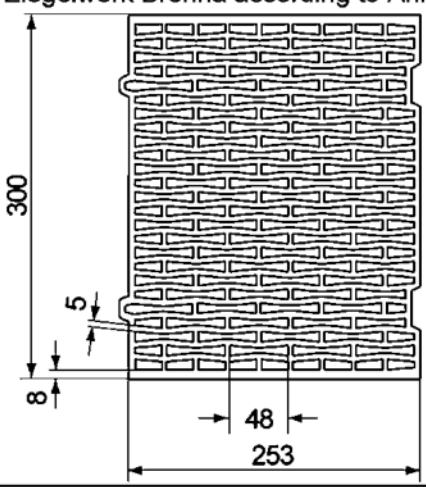

Vertical perforated brick HLz, Porotherm W 44, filled with mineral wool, EN 771-1:2011+A1:2015 according to Annex C80

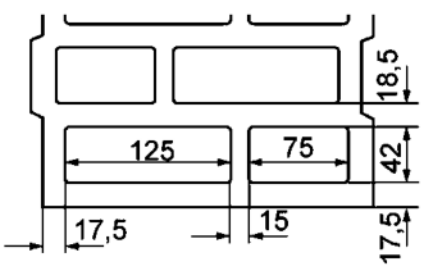

Vertical perforated brick HLz,
EN 771-1:2011+A1:2015;
e.g. Wienerberger according to Annex C84

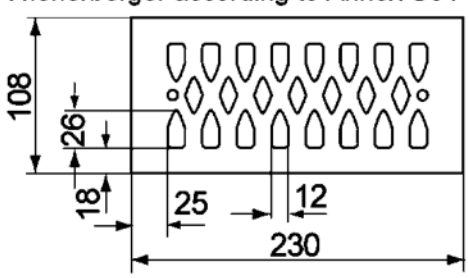

Measures in [mm]
Figures not to scale

Upat injection system UPM 44 for masonry

Intended Use
Overview dimensions of perforated and hollow bricks part 4

Annex B18
Appendix 25 / 153

Table B19.1: Overview dimensions of perforated and hollow bricks part 5

Vertical perforated brick filled with mineral wool,
EN 771-1:2011+A1:2015; according to Annex C86

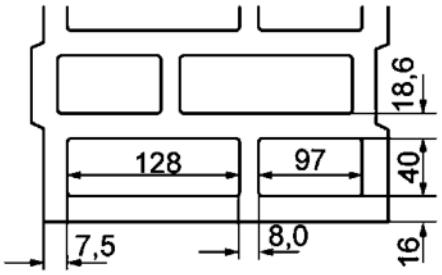

Vertical perforated brick HLz,
EN 771-1:2011+A1:2015;
e.g. Wienerberger according to Annex C90

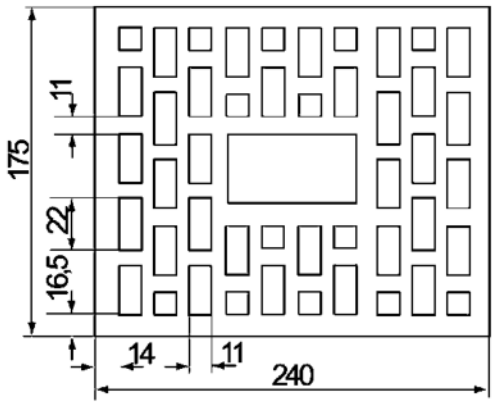

Horizontal perforated brick LLz,
EN 771-1:2011+A1:2015; according to Annex C94

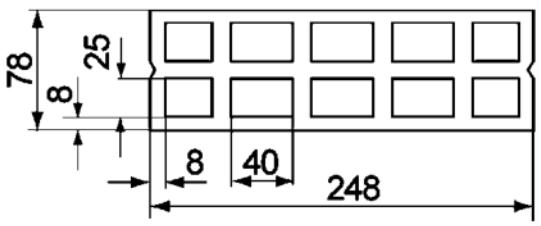

Horizontal perforated brick LLz,
EN 771-1:2011+A1:2015;
e.g. Cermanica Farreny S.A according to Annex C96

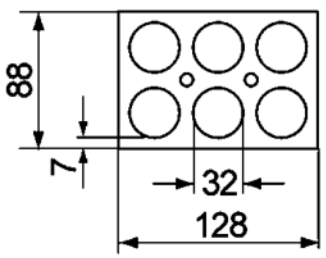

Light-weight concrete hollow block Hbl,
EN 771-3:2011+A1:2015; according to Annex C98

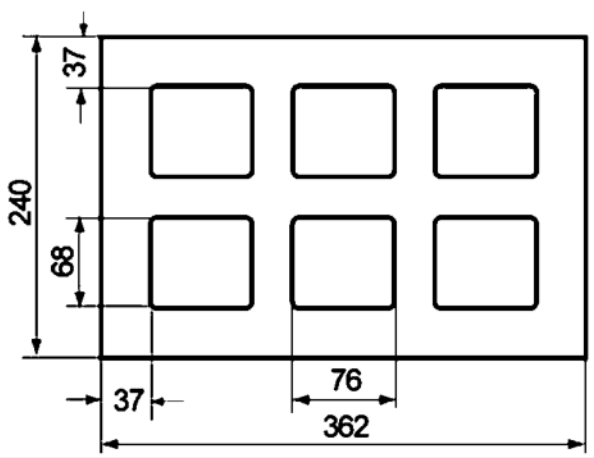

Light-weight concrete hollow block Hbl,
EN 771-3:2011+A1:2015;
e.g. Sepa according to Annex C102

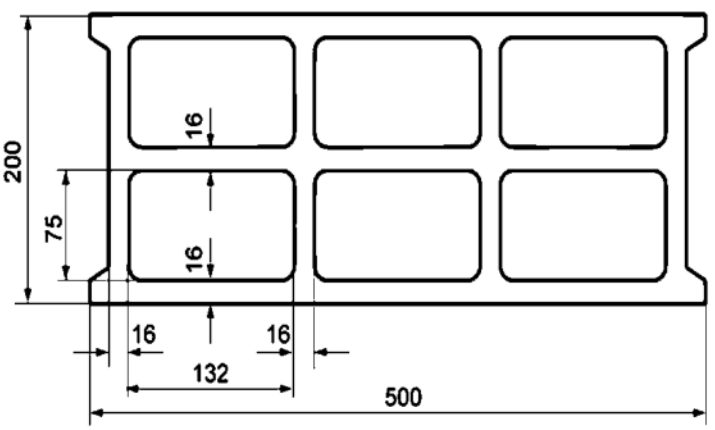

Measures in [mm]
Figures not to scale

Upat injection system UPM 44 for masonry

Intended Use
Overview dimensions of perforated and hollow bricks part 5

Annex B19
Appendix 26 / 153

Table B20.1: Overview dimensions of perforated and hollow bricks part 6

Light-weight concrete hollow block Hbl,
EN 771-3:2011+A1:2015
e.g. Roadstone wood according to Annex C104

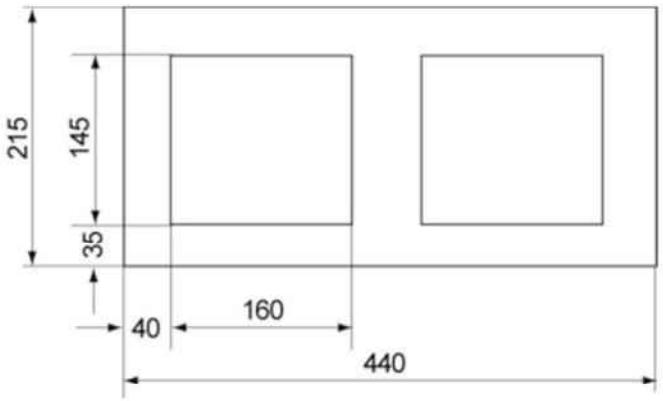

Light-weight concrete hollow block Hbl,
EN 771-3:2011+A1:2015
e.g. Sepa according to Annex C108

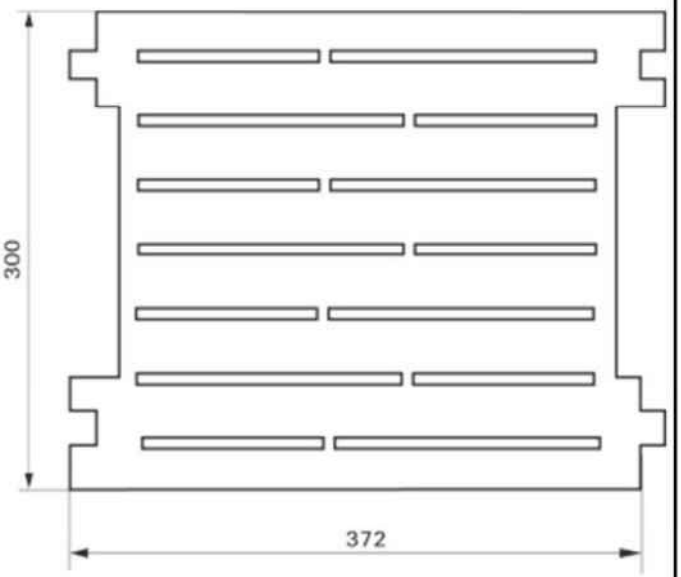

Light-weight concrete solid block Vbl,
EN 771-3:2011+A1:2015;
e.g. Sepa according to Annex C110

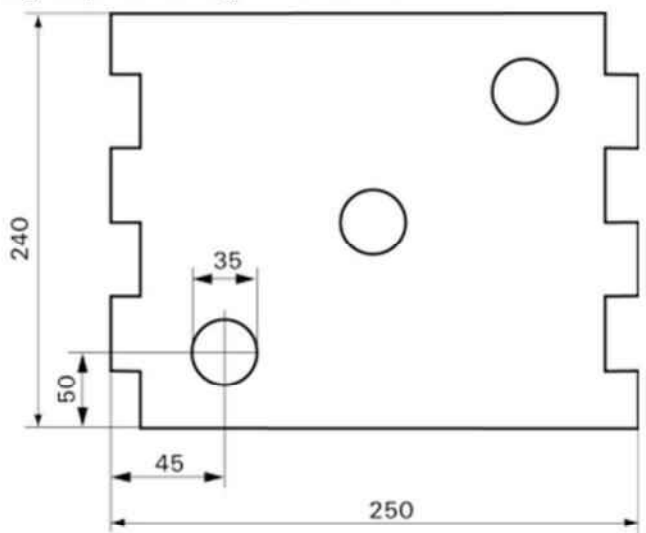

Measures in [mm]
Figures not to scale

Upat injection system UPM 44 for masonry

Intended Use
Overview dimensions of perforated and hollow bricks part 6

Annex B20

Spacing and edge distance part 1

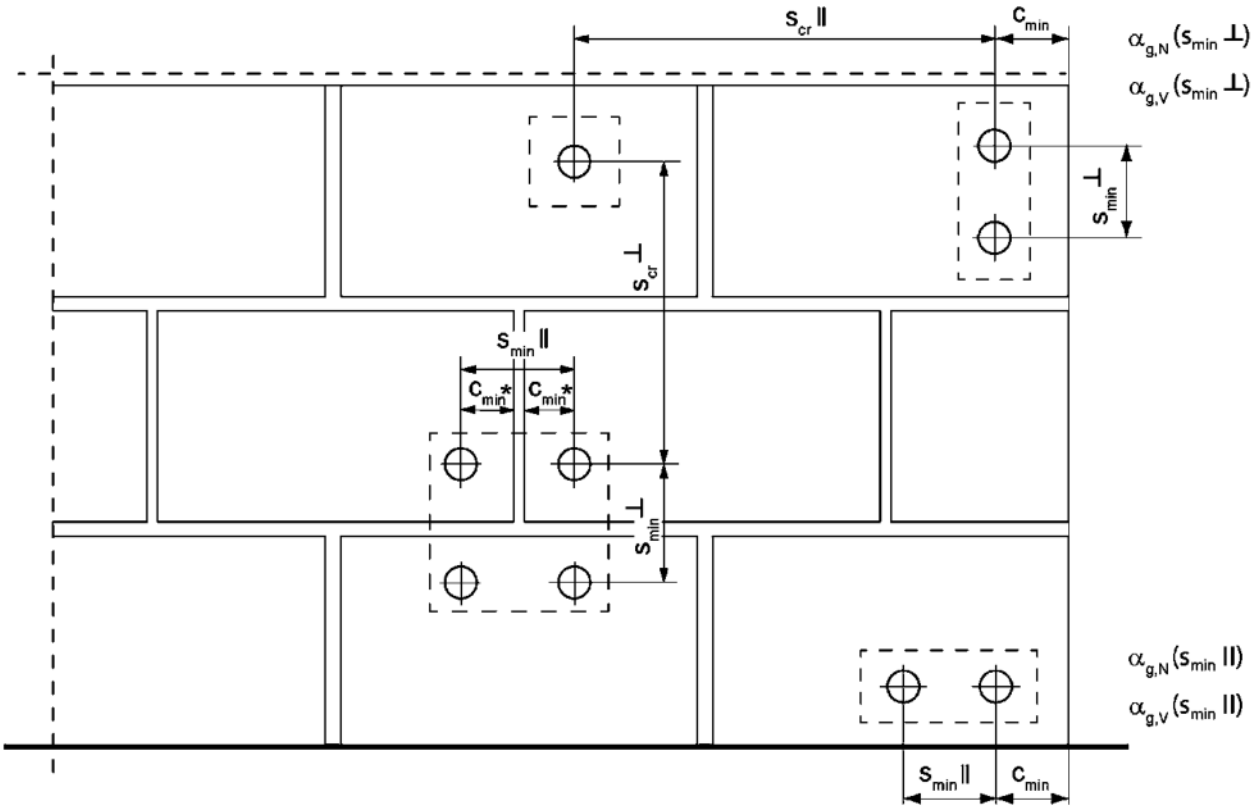

* Only, if vertical joints are not completely filled with mortar

s_{min} ‖	=	Minimum spacing parallel to horizontal joint
s_{min} ⊥	=	Minimum spacing perpendicular to horizontal joint
s_{cr} ‖	=	Characteristic spacing parallel to horizontal joint
s_{cr} ⊥	=	Characteristic spacing perpendicular to horizontal joint
$c_{cr} = c_{min}$	=	Edge distance
$\alpha_{g,N}$ (s_{min} ‖)	=	Group factor for tension load, anchor group parallel to horizontal joint
$\alpha_{g,V}$ (s_{min} ‖)	=	Group factor for shear load, anchor group parallel to horizontal joint
$\alpha_{g,N}$ (s_{min} ⊥)	=	Group factor for tension load, anchor group perpendicular to horizontal joint
$\alpha_{g,V}$ (s_{min} ⊥)	=	Group factor for shear load, anchor group perpendicular to horizontal joint

Figures not to scale

Spacing and edge distance part 2

For $s \geq s_{cr}$: $\alpha_g = 2$

For $s_{min} \leq s < s_{cr}$: α_g according to installation parameters of brick Annex C

Group of 2 anchors

$N^g_{Rk} = \alpha_{g,N} \bullet N_{Rk}$; $V^g_{Rk,b} = V^g_{Rk,c,II} = V^g_{Rk,c,\perp} = \alpha_{g,V} \bullet V_{Rk}$

Group of 4 anchors

$N^g_{Rk} = \alpha_{g,N}\ (s_{min}II) \bullet\ \alpha_{g,N}\ (s_{min}\perp) \bullet N_{Rk}$;

$V^g_{Rk,b} = V^g_{Rk,c,II} = V^g_{Rk,c,\perp} = \alpha_{g,V}\ (s_{min}II) \bullet \alpha_{g,V}\ (s_{min}\perp) \bullet V_{Rk}$

with N_{Rk} and $\alpha_{g,N}$ depending on $s_{min}II$ or $s_{min}\perp$ acc. to Annex C

with V_{Rk} and $\alpha_{g,V}$ depending on $s_{min}II$ or $s_{min}\perp$ acc. to Annex C

Table C1.1: Characteristic resistance to **steel failure** under **tension loading** of **Upat anchor rods** and **standard threaded rods**

Anchor rod / standard threaded rod				M6	M8[3]	M10[3]	M12	M16
Characteristic resistance to steel failure under tension loading								
Characteristic resistance $N_{Rk,s}$	Steel zinc plated	Property class	4.6	8,0	14,6(13,2)	23,2(21,4)	33,7	62,8
			4.8	8,0	14,6(13,2)	23,2(21,4)	33,7	62,8
			5.8	10,0	18,3(16,6)	29,0(26,8)	42,1	78,5
			8.8	16,0	29,2(26,5)	46,4(42,8)	67,4	125,6
	Stainless steel R and High corrosion resistant steel HCR		50	10,0	18,3	29,0	42,1	78,5
			70	14,0	25,6	40,6	59,0	109,9
			80	16,0	29,2	46,4	67,4	125,6
			[kN]					
Partial factors [1]								
Partial factors $\gamma_{Ms,N}$	Steel zinc plated	Property class	4.6	2,00				
			4.8	1,50				
			5.8	1,50				
			8.8	1,50				
	Stainless steel R and High corrosion resistant steel HCR		50	2,86				
			70	1,50[2] / 1,87				
			80	1,60				
			[-]					

[1] In absence of other national regulations

[2] Only for Upat UPM A made of high corrosion resistant steel HCR

[3] Values in brackets are valid for undersized threaded rods with smaller stress area A_s for hot-dip galvanised standard threaded rods according to EN ISO 10684:2004+AC:2009.

Table C2.1: Characteristic resistance to **steel failure** under **shear loading** of **Upat anchor rods** and **standard threaded rods**

Anchor rod / standard threaded rod				M6	M8[3]	M10[3]	M12	M16
Characteristic resistance to steel failure under shear loading								
without lever arm								
Characteristic resistance $V^0_{Rk,s}$	Steel zinc plated	Property class	4.6	[kN]	4,8	8,7(7,9)	13,9(12,8)	20,2	37,6
			4.8		4,8	8,7(7,9)	13,9(12,8)	20,2	37,6
			5.8		6,0	10,9(9,9)	17,4(16,0)	25,2	47,1
			8.8		8,0	14,6(13,2)	23,2(21,4)	33,7	62,8
	Stainless steel R and High corrosion resistant steel HCR		50		5,0	9,1	14,5	21,0	39,2
			70		7,0	12,8	20,3	29,5	54,9
			80		8,0	14,6	23,2	33,7	62,8
with lever arm								
Characteristic resistance $M^0_{Rk,s}$	Steel zinc plated	Property class	4.6	[Nm]	6,1	14,9(12,9)	29,9(26,5)	52,3	132,9
			4.8		6,1	14,9(12,9)	29,9(26,5)	52,3	132,9
			5.8		7,6	18,7(16,1)	37,3(33,2)	65,4	166,2
			8.8		12,2	29,9(25,9)	59,8(53,1)	104,6	265,9
	Stainless steel R and High corrosion resistant steel HCR		50		7,6	18,7	37,3	65,4	166,2
			70		10,6	26,2	52,3	91,5	232,6
			80		12,2	29,9	59,8	104,6	265,9
Partial factors[1]								
Partial factors $\gamma_{Ms,V}$	Steel zinc plated	Property class	4.6	[-]	1,67				
			4.8		1,25				
			5.8		1,25				
			8.8		1,25				
	Stainless steel R and High corrosion resistant steel HCR		50		2,38				
			70		1,25[2] / 1,56				
			80		1,33				

[1] In absence of other national regulations

[2] Only for Upat UPM A made of high corrosion resistant steel HCR

[3] Values in brackets are valid for undersized threaded rods with smaller stress area A_s for hot-dip galvanised standard threaded rods (M8 resp. M10) according to EN ISO 10684:2004+AC:2009.

Table C3.1: Characteristic resistance to **steel failure** under **tension / shear loading** of **internal threaded anchors UPM-I**

Upat internal threaded anchor UPM-I					**M6**	**M8**	**M10**	**M12**
Characteristic resistance to steel failure under tension loading, decisive values of internal threaded anchor UPM-I with screw/threaded rod								
Characteristic resistance	$N_{Rk,s}$	Property class	4.6	[kN]	8,0	14,6	23,2	33,7
		Property class	5.8		10,0	18,3	29,0	42,1
		Property class 70	R		14,0	25,6	40,6	59,0
			HCR		14,0	25,6	40,6	59,0
Partial factors[1)]								
Partial factors	$\gamma_{Ms,N}$	Property class	4.6	[-]	2,00			
		Property class	5.8		1,50			
		Property class 70	R		1,87			
			HCR		1,87			
Characteristic resistance to steel failure under shear loading; decisive values of internal threaded anchor UPM-I with screw/threaded rod								
without lever arm								
Characteristic resistance	$V_{Rk,s}$	Property class	4.6	[kN]	4,8	8,7	13,9	20,2
		Property class	5.8		6,0	10,9	15,0	21,0
		Property class 70	R		7,0	12,8	20,3	29,5
			HCR		7,0	12,8	20,3	29,5
with lever arm								
Characteristic resistance	$M^0_{Rk,s}$	Property class	4.6	[Nm]	6,1	14,9	29,9	52,3
		Property class	5.8		7,6	18,7	37,3	65,4
		Property class 70	R		10,6	26,2	52,3	91,5
			HCR		10,6	26,2	52,3	91,5
Partial factors[1)]								
Partial factors	$\gamma_{Ms,V}$	Property class	4.6	[-]	1,67			
		Property class	5.8		1,25			
		Property class 70	R		1,56			
			HCR		1,56			

[1)] In absence of other national regulations

Solid brick Mz, NF, EN 771-1:2011+A1:2015

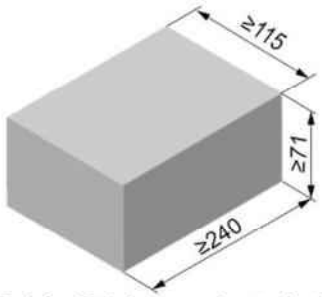

Producer		e.g. Wienerberger		
Nominal dimensions	[mm]	length L	width W	height H
		≥ 240	≥ 115	≥ 71
Mean gross dry density ρ	[kg/dm³]	≥ 1,8		
Mean compressive strength / Min. compressive strength single brick [1]	[N/mm²]	15 / 12 or 25 / 20 or 35 / 28		
Standard or annex		EN 771-1:2011+A1:2015		

Table C4.1: Installation parameters for edge distance c=100mm

Anchor rod			**M6**	**M8**	**M10**	**M12**	-		-	
Internal threaded anchor UPM-I			-	-	-	-	**M6**	**M8**	**M10**	**M12**
							11x85		**15x85**	
Anchor rod and internal threaded anchor UPM-I without perforated sleeve										
Effective anchorage depth	h_{ef}	[mm]	50	50	50	50	85			
			80	80	80	80				
			200	200	200	200				
Max. installation torque	max T_{inst}	[Nm]	4	10			4	10		
General installation parameters										
Edge distance	$c_{min} = c_{cr}$	[mm]	100				100			
Edge distance h_{ef}=200	$c_{min} = c_{cr}$		150				-[2]			
Spacing	s_{min} II,N		60				60			
	h_{ef}=200 s_{min} II,N		240				-[2]			
	s_{min} II,V		240				240			
	s_{cr} II		240				240			
	$s_{cr} \perp = s_{min} \perp$		75				75			
Drilling method										
Hammer drilling with hard metal hammer drill										

[1] The minimum compressive strength of the single brick must not be less than 80% of the mean compressive strength.
[2] No performance assessed

Table C4.2: Group factors

Anchor rods			**M6**	**M8**	**M10**	**M12**	-		-	
Internal threaded anchor UPM-I			-	-	-	-	**M6**	**M8**	**M10**	**M12**
							11x85		**15x85**	
Edge distance	c_{min}	[mm]	**100**							
Group factor	$\alpha_{g,N}$ (s_{min} II)	[-]	1,5							
	$\alpha_{g,V}$ (s_{min} II)		2,0							
	h_{ef}=200 $\alpha_{g,N}$ (s_{min} II)		1,5							
	h_{ef}=200 $\alpha_{g,V}$ (s_{min} II)		2,0							
	$\alpha_{g,N}$ ($s_{min} \perp$)		2,0							
	$\alpha_{g,V}$ ($s_{min} \perp$)		2,0							
	h_{ef}=200 $\alpha_{g,N}$ ($s_{min} \perp$)		2,0							
	h_{ef}=200 $\alpha_{g,V}$ ($s_{min} \perp$)		2,0							

Upat injection system UPM 44 for masonry

Performance
Solid brick Mz, NF, dimensions, installation parameters for edge distance c=100mm, Group factors

Annex C4
Appendix 33 / 153

Solid brick Mz, NF, EN 771-1:211+A1:2015

Table C5.1: Characteristic resistance to pull-out failure or brick breakout failure of a single anchor under tension loading for edge distance c=100mm

Anchor rod		**M6**	**M8**	**M10**		**M12**			-		-	
Internal threaded anchor UPM-I		-	-	-		-			**M6**	**M8**	**M10**	**M12**
									11x85		**15x85**	
$N_{Rk} = N_{Rk,p} = N_{Rk,b} = N_{Rk,p,c} = N_{Rk,b,c}$ [kN]; temperature range 50/80°C [2)]												
Mean compressive strength / Min. compressive strength single brick [1)]	Use conditions	Effective anchorage depth h_{ef} [mm]										
		≥50	≥50	50	80	200	50	80	200	85		
15 / 12 N/mm²	w/w w/d	2,5	2,5	2,0	3,0	7,5	2,0	3,5	5,0	3,5		
	d/d	4,0	4,0	3,5	5,0	12,0	3,0	5,5	8,0	5,5		
25 / 20 N/mm²	w/w w/d	3,5	3,5	3,0	4,5	11,0	3,0	5,0	7,0	5,0		
	d/d	5,5	5,5	5,0	7,0	12,0	4,5	8,0	11,5	8,0		

[1)] The minimum compressive strength of the single brick must not be less than 80% of the mean compressive strength.

[2)] For temperature range 72/120°C: $N_{Rk\,(72/120°C)} = 0{,}83 \cdot N_{Rk\,(50/80°C)}$.

Table C5.2: Characteristic resistance to local brick failure or brick edge failure of a single anchor under shear loading for edge distance c=100mm

Anchor rod		**M6**	**M8**	**M10**		**M12**		-		-	
Internal threaded anchor UPM-I		-	-	-		-		**M6**	**M8**	**M10**	**M12**
								11x85		**15x85**	
$V_{Rk} = V_{Rk,b} = V_{Rk,c,II} = V_{Rk,c,\perp}$ [kN]; temperature range 50/80°C and 72/120°C											
Mean compressive strength / Min. compressive strength single brick [1)]	Use conditions	Effective anchorage depth h_{ef} [mm]									
		≥50	≥50	≥50	200	≥50	200	85			
15 / 12 N/mm²	w/w w/d d/d	2,5	2,5	4,0	8,5	4,0	11,5	2,5			
25 / 20 N/mm²	w/w w/d d/d	4,0	4,0	6,0	12,0	5,5	12,0	4,0			

[1)] The minimum compressive strength of the single brick must not be less than 80% of the mean compressive strength.

Factor for job site tests and displacements see annex C123.

Solid brick Mz, NF, EN 771-1:2011+A1:2015

Table C6.1: Installation parameters for edge distance c=60mm

Anchor rod			**M6**	**M8**	**M10**	**M12**	**M16**	-	-
Internal threaded anchor UPM-I			-	-	-	-	-	**M6** **M8** **11x85**	**M10** **M12** **15x85**
Anchor rod and internal threaded anchor UPM-I without perforated sleeve									
Effective anchorage depth	h_{ef}	[mm]	50	50	50	50	50	85	
			100	100	100	100	100		
			200	200	200	200	200		
Max. installation torque	max T_{inst}	[Nm]	4	10				4	10
General installation parameters									
Edge distance	$c_{min} = c_{cr}$	[mm]	60						
Edge distance h_{ef}=200	c_{min}		60						
Spacing	s_{min} II,N		80						
	h_{ef}=200 s_{min} II,N		80						
	s_{min} II,V		80						
	s_{cr} II		3x h_{ef}						
	s_{min} ⊥		80						
	s_{cr} ⊥		3x h_{ef}						
Drilling method									
Hammer drilling with hard metal hammer drill									

Table C6.2: Group factors

Anchor rods			**M6**	**M8**	**M10**	**M12**	**M16**	-	-
Internal threaded anchor UPM-I			-	-	-	-	-	**M6** **M8** **11x85**	**M10** **M12** **15x85**
Edge distance	c_{min}	[mm]	60						
Group factor	$\alpha_{g,N}$ (s_{min} II)	[-]	0,6						
	$\alpha_{g,V}$ (s_{min} II)		1,3						
	h_{ef}=200 $\alpha_{g,N}$ (s_{min} II)		1,4						
	h_{ef}=200 $\alpha_{g,V}$ (s_{min} II)		1,5						
	$\alpha_{g,N}$ (s_{min} ⊥)		0,3						
	$\alpha_{g,V}$ (s_{min} ⊥)		1,3						
	h_{ef}=200 $\alpha_{g,N}$ (s_{min} ⊥)		2,0						
	h_{ef}=200 $\alpha_{g,V}$ (s_{min} ⊥)		1,1						

Solid brick Mz, NF, EN 771-1:2011+A1:2015

Table C7.1: Characteristic resistance to pull-out failure or brick breakout failure of a single anchor under tension loading for edge distance c=60mm

Anchor rod		**M6**	**M8**	**M10**	**M12**	**M16**	-	-
Internal threaded anchor UPM-I		-	-	-	-	-	**M6** **M8** **11x85**	**M10** **M12** **15x85**
$N_{Rk} = N_{Rk,p} = N_{Rk,b} = N_{Rk,p,c} = N_{Rk,b,c}$ [kN]; temperature range 50/80°C [3)]								
Mean compressive strength / Min. compressive strength single brick [1)]	Use conditions	Effective anchorage depth h_{ef} [mm]						
		50	100	50	100	50	100	200	50	100	200	50	100	200	85
15 / 12 N/mm²	w/w w/d	1,5		2,0	2,0	2,0	2,5	-[2)]	2,0	2,5	-[2)]	2,0	5,5	-[2)]	-[2)]
	d/d	2,5		3,0	4,0	3,0	4,0	9,5	3,0	4,0	9,5	3,0	8,5	9,5	-[2)]
25 / 20 N/mm²	w/w w/d	2,0		2,5	3,0	2,5	3,5	-[2)]	3,0	3,5	-[2)]	3,0	7,5	-[2)]	-[2)]
	d/d	3,5		4,5	5,5	4,5	5,5	12	4,5	5,5	12	4,5	12	12	-[2)]
35 / 28 N/mm²	w/w w/d	2,5		3,0	4,0	3,0	4,0	-[2)]	3,5	4,0	-[2)]	3,5	9,0	-[2)]	-[2)]
	d/d	4,0		5,5	6,5	5,5	6,5	12	5,5	6,5	12	5,5	12	12	-[2)]

[1)] The minimum compressive strength of the single brick must not be less than 80% of the mean compressive strength.

[2)] No performance assessed.

[3)] For temperature range 72/120°C: $N_{Rk\,(72/120°C)} = 0{,}83 \cdot N_{Rk\,(50/80°C)}$.

Table C7.2: Characteristic resistance to local brick failure or brick edge failure of a single anchor under shear loading for edge distance c=60mm

Anchor rod		**M6**	**M8**	**M10**	**M12**	**M16**	-	-
Internal threaded anchor UPM-I		-	-	-	-	-	**M6** **M8** **11x85**	**M10** **M12** **15x85**
$V_{Rk} = V_{Rk,b} = V_{Rk,c,II} = V_{Rk,c,\perp}$ [kN]; temperature range 50/80°C and 72/120°C								
Mean compressive strength / Min. compressive strength single brick [1)]	Use conditions	Effective anchorage depth h_{ef} [mm]						
		50	100	50	100	50	100	200	50	100	200	50	100	200	85
15 / 12 N/mm²	w/w w/d d/d	1,2	2,5	1,2	3,0	2,0	3,0	1,5	1,5	3,0	3,0	0,6	3,0	4,5	-[2)]
25 / 20 N/mm²		1,5	3,5	1,5	4,5	3,0	4,5	2,5	2,0	4,5	4,5	0,9	4,5	6,0	-[2)]
35 / 28 N/mm²		2,0	4,0	2,0	5,0	3,5	5,0	3,0	2,5	5,0	5,0	1,2	5,0	7,5	-[2)]

[1)] The minimum compressive strength of the single brick must not be less than 80% of the mean compressive strength.

[2)] No performance assessed.

Factor for job site tests and displacements see annex C123.

Solid brick Mz, 2DF, EN 771-1:2011+A1:2015

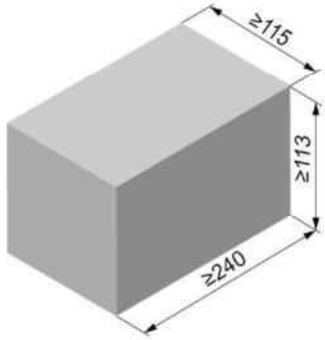

Producer		e.g. Wienerberger		
Nominal dimensions	[mm]	length L	width W	height H
		≥ 240	≥ 115	≥ 113
Mean gross dry density ρ	[kg/dm³]	≥ 1,8		
Mean compressive strength / Min. compressive strength single brick [1]	[N/mm²]	12,5 / 10 or 20 / 16		
Standard or annex		EN 771-1:2011+A1:2015		

Table C8.1: Installation parameters

Anchor rod			**M6**		**M8**		**M10**		**M12**		**M16**		-		-	
Internal threaded anchor UPM-I			-		-		-		-		-		**M6**	**M8**	**M10**	**M12**
													11x85		**15x85**	
Anchor rod and internal threaded anchor UPM-I without perforated sleeve																
Effective anchorage depth	h_{ef}	[mm]	50	100	50	100	50	100	50	100	50	100	85			
Max. installation torque	max T_{inst}	[Nm]	4		10								4		10	
Anchor rod and internal threaded anchor UPM-I with perforated sleeve UPM SH 16x85 K																
Effective anchorage depth	h_{ef}	[mm]	-[2]		85				-[2]				85		-[2]	
Max. installation torque	max T_{inst}	[Nm]			10								4	10		
General installation parameters																
Edge distance	$c_{min} = c_{cr}$	[mm]	60													
Spacing	s_{min} II		120													
	s_{cr} II		240													
	$s_{cr} \perp = s_{min} \perp$		115													
Drilling method																
Hammer drilling with hard metal hammer drill																

[1] The minimum compressive strength of the single brick must not be less than 80% of the mean compressive strength.
[2] No performance assessed.

Table C8.2: Group factors

Anchor rods		**M6**	**M8**	**M10**	**M12**	**M16**	-		-	
Internal threaded anchor UPM-I		-	-	-	-	-	**M6**	**M8**	**M10**	**M12**
							11x85		**15x85**	
Group factor	$\alpha_{g,N}$ (s_{min} II)	[-]	1,5							
	$\alpha_{g,V}$ (s_{min} II)		1,4							
	$\alpha_{g,N}$ ($s_{min} \perp$)		2,0							
	$\alpha_{g,V}$ ($s_{min} \perp$)									

Upat injection system UPM 44 for masonry

Performance
Solid brick Mz, 2DF, dimensions, installation parameters, Group factors

Annex C8
Appendix 37 / 153

Solid brick Mz, 2DF, EN 771-1:2011+A1:2015

Table C9.1: Characteristic resistance to pull-out failure or brick breakout failure of a single anchor under tension loading

Anchor rod	M6	M8	M10	M12	M16	-	-	M8	M10	-
Internal threaded anchor UPM-I	-	-	-	-	-	M6 M8 / 11x85	M10 M12 / 15x85	-	-	M6 M8 / 11x85
Perforated sleeve UPM SH K	-	-	-	-	-	-	-	16x85		

$N_{Rk} = N_{Rk,p} = N_{Rk,b} = N_{Rk,p,c} = N_{Rk,b,c}$ [kN]; temperature range 50/80°C [2)]

Mean compressive strength / Min. compressive strength single brick [1)]	Use conditions	Effective anchorage depth h_{ef} [mm]											
		50	100	50	100	50	100	50	100	50	100	85	
12,5 / 10 N/mm²	w/w w/d	1,5	2,5	1,5	2,5	1,5	3,0	2,0	3,5	2,0	3,5	2,0	1,5
	d/d	3,0	4,0	3,0	4,0	3,0	4,5	3,0	5,5	3,0	5,5	3,0	3,0
20 / 16 N/mm²	w/w w/d	2,5	4,0	2,5	4,0	2,5	4,5	3,5	5,5	3,5	5,5	3,5	2,5
	d/d	4,5	7,0	4,5	7,0	4,5	7,5	5,5	8,0	5,5	8,0	5,5	4,5

[1)] The minimum compressive strength of the single brick must not be less than 80% of the mean compressive strength.

[2)] For temperature range 72/120°C: $N_{Rk\,(72/120°C)} = 0{,}83 \cdot N_{Rk\,(50/80°C)}$.

Table C9.2: Characteristic resistance to local brick failure or brick edge failure of a single anchor under shear loading

Anchor rod	M6	M8	M10	M12	M16	-	-	M8	M10	-
Internal threaded anchor UPM-I	-	-	-	-	-	M6 M8 / 11x85	M10 M12 / 15x85	-	-	M6 M8 / 11x85
Perforated sleeve UPM SH K	-	-	-	-	-	-	-	16x85		

$V_{Rk} = V_{Rk,b} = V_{Rk,c,II} = V_{Rk,c,\perp}$ [kN]; temperature range 50/80°C and 72/120°C

Mean compressive strength / Min. compressive strength single brick [1)]	Use conditions	Effective anchorage depth h_{ef} [mm]													
		≥ 50					85								
12,5 / 10 N/mm²	w/w w/d / d/d	2,5	3,0	3,0	3,5	3,0	2,5	3,0	3,0	3,0	3,0	3,5	2,5	3,0	
20 / 16 N/mm²	w/w w/d / d/d	4,0	5,0	5,5	5,5	5,0	4,0	5,0	5,0	5,0	5,0	6,0	4,0	5,0	

[1)] The minimum compressive strength of the single brick must not be less than 80% of the mean compressive strength.

Factor for job site tests and displacements see annex C123.

Solid brick Mz, EN 771-1:2011+A1:2015

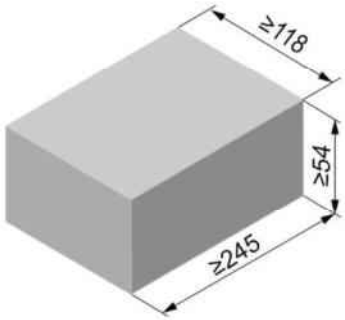

Producer		e.g. Nigra		
Nominal dimensions	[mm]	length L	width W	height H
		≥ 245	≥ 118	≥ 54
Mean gross dry density ρ	[kg/dm³]	≥ 1,8		
Mean compressive strength / Min. compressive strength single brick [1]	[N/mm²]	12,5 / 10 or 25 / 20		
Standard or annex		EN 771-1:2011+A1:2015		

Table C10.1: Installation parameters

Anchor rod			**M6**		**M8**		**M10**		**M12**		**M16**		-		-	
Internal threaded anchor UPM-I			-		-		-		-		-		**M6**	**M8**	**M10**	**M12**
													11x85		**15x85**	
Anchor rod and internal threaded anchor UPM-I without perforated sleeve																
Effective anchorage depth	h_{ef}	[mm]	50	100	50	100	50	100	50	100	50	100	85			
Max. installation torque	max T_{inst}	[Nm]	4		10								4		10	
General installation parameters																
Edge distance	$c_{min} = c_{cr}$	[mm]	60													
Spacing	s_{cr} II = s_{min} II		245													
	$s_{cr} \perp = s_{min} \perp$		60													
Drilling method																
Hammer drilling with hard metal hammer drill																

[1] The minimum compressive strength of the single brick must not be less than 80% of the mean compressive strength.

Table C10.2: Group factors

Anchor rods			**M6**	**M8**	**M10**	**M12**	**M16**	-		-	
Internal threaded anchor UPM-I			-	-	-	-	-	**M6**	**M8**	**M10**	**M12**
								11x85		**15x85**	
Group factor	$\alpha_{g,N}$ (s_{min} II)	[-]	2								
	$\alpha_{g,V}$ (s_{min} II)										
	$\alpha_{g,N}$ ($s_{min} \perp$)										
	$\alpha_{g,V}$ ($s_{min} \perp$)										

Solid brick Mz, EN 771-1:2011+A1:2015

Table C11.1: Characteristic resistance to pull-out failure or brick breakout failure of a single anchor under tension loading

Anchor rod		**M6**	**M8**	**M10**	**M12**	**M16**	-		-	
Internal threaded anchor UPM-I		-	-	-	-	-	**M6**	**M8**	**M10**	**M12**
							11x85		**15x85**	
$N_{Rk} = N_{Rk,p} = N_{Rk,b} = N_{Rk,p,c} = N_{Rk,b,c}$ [kN]; temperature range 50/80°C [2)]										
Mean compressive strength/ Min. compressive strength single brick [1)]	Use conditions	Effective anchorage depth h_{ef} [mm] ≥ 50					85			
12,5 / 10 N/mm²	w/w w/d	0,60	0,90	0,75	0,75	0,75	0,60	0,75		
	d/d	1,20	1,50	1,20	1,20	1,20	1,20	1,20		
25 / 20 N/mm²	w/w w/d	0,90	1,50	1,20	1,20	1,20	0,90	1,20		
	d/d	1,50	2,50	2,00	2,00	2,00	1,50	2,00		

[1)] The minimum compressive strength of the single brick must not be less than 80% of the mean compressive strength.

[2)] For temperature range 72/120°C: $N_{Rk\,(72/120°C)} = 0{,}83 \cdot N_{Rk\,(50/80°C)}$.

Table C11.2: Characteristic resistance to local brick failure or brick edge failure of a single anchor under shear loading

Anchor rod		**M6**	**M8**	**M10**	**M12**	**M16**	-		-	
Internal threaded anchor UPM-I		-	-	-	-	-	**M6**	**M8**	**M10**	**M12**
							11x85		**15x85**	
$V_{Rk} = V_{Rk,b} = V_{Rk,c,II} = V_{Rk,c,\perp}$ [kN]; temperature range 50/80°C and 72/120°C										
Mean compressive strength / Min. compressive strength single brick [1)]	Use conditions	Effective anchorage depth h_{ef} [mm] ≥ 50					85			
12,5 / 10 N/mm²	w/w w/d d/d	2,0	3,0	4,0	4,5	5,5	2,0	3,0	4,0	4,5
25 / 20 N/mm²	w/w w/d d/d	2,5	4,0	5,5	6,0	8,0	2,5	4,0	5,5	6,0

[1)] The minimum compressive strength of the single brick must not be less than 80% of the mean compressive strength.

Factor for job site tests and displacements see annex C123.

Solid brick Mz, EN 771-1:2011+A1:2015

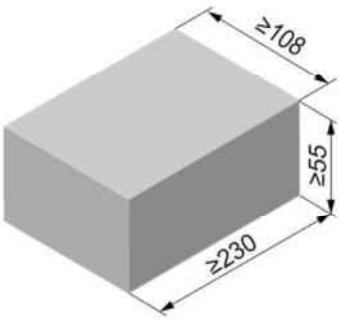

Producer		e.g. Wienerberger		
Nominal dimensions	[mm]	length L	width W	height H
		≥ 230	≥ 108	≥ 55
Mean gross dry density ρ	[kg/dm³]	≥ 1,8		
Mean compressive strength / Min. compressive strength single brick [1]	[N/mm²]	12,5 / 10 or 25 / 20		
Standard or annex		EN 771-1:2011+A1:2015		

Table C12.1: Installation parameters

Anchor rod			**M6**		**M8**		**M10**		**M12**		**M16**		-		-	
Internal threaded anchor UPM-I			-		-		-		-		-		**M6**	**M8**	**M10**	**M12**
													11x85		**15x85**	
Anchor rod and internal threaded anchor UPM-I without perforated sleeve																
Effective anchorage depth	h_{ef}	[mm]	50	90	50	90	50	90	50	90	50	90	85			
Max. installation torque	max T_{inst}	[Nm]	4		10								4	10		
General installation parameters																
Edge distance	$c_{min} = c_{cr}$	[mm]	60													
Spacing	s_{cr} II = s_{min} II	[mm]	230													
	$s_{cr} \perp = s_{min} \perp$	[mm]	60													
Drilling method																
Hammer drilling with hard metal hammer drill																

[1] The minimum compressive strength of the single brick must not be less than 80% of the mean compressive strength.

Table C12.2: Group factors

Anchor rods			**M6**	**M8**	**M10**	**M12**	**M16**	-		-	
Internal threaded anchor UPM-I			-	-	-	-	-	**M6**	**M8**	**M10**	**M12**
								11x85		**15x85**	
Group factor	$\alpha_{g,N}$ (s_{min} II)	[-]	2								
	$\alpha_{g,V}$ (s_{min} II)										
	$\alpha_{g,N}$ ($s_{min} \perp$)										
	$\alpha_{g,V}$ ($s_{min} \perp$)										

Upat injection system UPM 44 for masonry

Performance
Solid brick Mz, dimensions, installation parameters, Group factors

Annex C12
Appendix 41 / 153

Solid brick Mz, EN 771-1:2011+A1:2015

Table C13.1: Characteristic resistance to pull-out failure or brick breakout failure of a single anchor under tension loading

Anchor rod		**M6**	**M8**	**M10**	**M12**	**M16**	**-**		**-**	
Internal threaded anchor UPM-I		-	-	-	-	-	**M6**	**M8**	**M10**	**M12**
							11x85		**15x85**	
$N_{Rk} = N_{Rk,p} = N_{Rk,b} = N_{Rk,p,c} = N_{Rk,b,c}$ [kN]; temperature range 50/80°C [2)]										
Mean compressive strength / Min. compressive strength single brick [1)]	Use conditions	Effective anchorage depth h_{ef} [mm]								
		≥ 50					85			
12,5 / 10 N/mm²	w/w w/d	0,60	0,90	0,75	0,75	0,75	0,75			
	d/d	1,20	1,50	1,20	1,20	1,20	1,20			
25 / 20 N/mm²	w/w w/d	0,90	1,50	1,20	1,20	1,20	1,20			
	d/d	1,50	2,50	2,00	2,00	2,00	2,00			

[1)] The minimum compressive strength of the single brick must not be less than 80% of the mean compressive strength.

[2)] For temperature range 72/120°C: $N_{Rk\ (72/120°C)} = 0{,}83 \cdot N_{Rk\ (50/80°C)}$.

Table C13.2: Characteristic resistance to local brick failure or brick edge failure of a single anchor under shear loading

Anchor rod		**M6**	**M8**	**M10**	**M12**	**M16**	**-**		**-**	
Internal threaded anchor UPM-I		-	-	-	-	-	**M6**	**M8**	**M10**	**M12**
							11x85		**15x85**	
$V_{Rk} = V_{Rk,b} = V_{Rk,c,II} = V_{Rk,c,\perp}$ [kN]; temperature range 50/80°C and 72/120°C										
Mean compressive strength / Min. compressive strength single brick [1)]	Use conditions	Effective anchorage depth h_{ef} [mm]								
		≥ 50					85			
12,5 / 10 N/mm²	w/w w/d d/d	2,0	3,0	4,0	4,5	5,5	2,0	3,0	4,0	4,5
25 / 20 N/mm²	w/w w/d d/d	2,5	4,0	5,5	6,0	8,0	2,5	4,0	5,5	6,0

[1)] The minimum compressive strength of the single brick must not be less than 80% of the mean compressive strength.

Factor for job site tests and displacements see annex C123.

Solid calcium silicate brick KS, NF, EN 771-2:2011+A1:2015

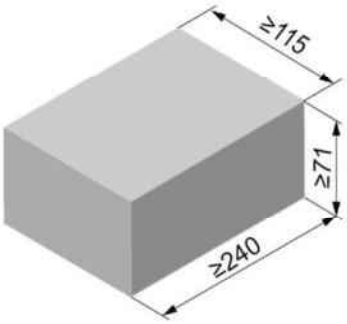

Producer		-		
Nominal dimensions	[mm]	length L	width W	height H
		≥ 240	≥ 115	≥ 71
Mean gross dry density ρ	[kg/dm³]	≥ 1,8		
Mean compressive strength / Min. compressive strength single brick [1]	[N/mm²]	15 / 12 or 25 / 20 or 35 / 28		
Standard or annex		EN 771-2:2011+A1:2015		

Table C14.1: Installation parameters

Anchor rod			**M6**		**M8**		**M10**		**M12**		**M16**		-		-	
Internal threaded anchor UPM-I			-		-		-		-		-		**M6**	**M8**	**M10**	**M12**
													11x85		**15x85**	
Anchor rod and internal threaded anchor UPM-I without perforated sleeve																
Effective anchorage depth	h_{ef}	[mm]	50	100	50	100	50	100	50	100	50	100	85		85	
							200		200		200					
Max. installation torque	max T_{inst}	[Nm]	3		5		15		15		25		3	5	15	
General installation parameters																
Edge distance	$c_{min} = c_{cr}$	[mm]	60													
Spacing	s_{min} ∥	[mm]	80													
	s_{cr} ∥	[mm]	80													
	s_{min} ⊥	[mm]	3x h_{ef}													
	s_{cr} ⊥	[mm]	3x h_{ef}													
Drilling method																
Hammer drilling with hard metal hammer drill																

[1] The minimum compressive strength of the single brick must not be less than 80% of the mean compressive strength..

Table C14.2: Group factors

Anchor rod			**M6**	**M8**	**M10**	**M12**	**M16**	-		-	
Internal threaded anchor UPM-I			-	-	-	-	-	**M6**	**M8**	**M10**	**M12**
								11x85		**15x85**	
Group factor	$\alpha_{g,N}$ (s_{min} ∥)	[-]	0,7								
	$\alpha_{g,V}$ (s_{min} ∥)	[-]	1,3								
	$\alpha_{g,N}$ (s_{min} ⊥)	[-]	2,0								
	$\alpha_{g,V}$ (s_{min} ⊥)	[-]	2,0								

Upat injection system UPM 44 for masonry

Performance
Solid calcium silicate brick KS, NF, dimensions, installation parameters, Group factors

Annex C14
Appendix 43 / 153

Solid calcium silicate brick KS, NF, EN 771-2:2011+A1:2015

Table C15.1: Characteristic resistance to pull-out failure or brick breakout failure of a single anchor under tension loading

Anchor rod		M6		M8		M10			M12			M16			-		-	
Internal threaded anchor UPM-I		-		-		-			-			-			M6 / 11x85	M8 / 11x85	M10 / 15x85	M12 / 15x85
$N_{Rk} = N_{Rk,p} = N_{Rk,b} = N_{Rk,p,c} = N_{Rk,b,c}$ [kN]; temperature range 50/80°C [2]																		
Mean compressive strength / Min. compressive strength single brick [1]	Use conditions	Effective anchorage depth h_{ef} [mm]																
		50	100	50	100	50	100	200	50	100	200	50	100	200	85		85	
15 / 12 N/mm²	w/w w/d	2,0	3,0	2,5	4,5	2,5	3,5	7,0	2,5	3,0	6,5	2,5	3,5	8,0	2,5		2,5	
	d/d	4,0	5,5	4,0	8,0	4,0	5,5	12	4,0	4,5	12	4,5	5,5	12	4,0		4,0	
25 / 20 N/mm²	w/w w/d	3,0	4,5	3,5	6,5	3,5	4,5	10	3,5	4,0	9,5	4,0	5,0	11	3,5		3,5	
	d/d	5,5	7,5	6,0	11	6,0	8,0	12	6,0	6,5	12	6,5	8,0	12	6,0		6,0	
35 / 28 N/mm²	w/w w/d	3,5	5,0	4,0	8,0	4,5	5,5	12	4,5	5,0	11	4,5	5,5	12	4,5		4,5	
	d/d	6,5	9,0	7,0	12	7,0	9,0	12	7,0	7,5	12	7,5	9,5	12	7,0		7,0	

[1] The minimum compressive strength of the single brick must not be less than 80% of the mean compressive strength.

[2] For temperature range 72/120°C: $N_{Rk\,(72/120°C)} = 0{,}83 \cdot N_{Rk\,(50/80°C)}$.

Table C15.2: Characteristic resistance to local brick failure or brick edge failure of a single anchor under shear loading

Anchor rod		M6		M8		M10		M12		M16		-		-	
Internal threaded anchor UPM-I		-		-		-		-		-		M6 / 11x85	M8 / 11x85	M10 / 15x85	M12 / 15x85
$V_{Rk} = V_{Rk,b} = V_{Rk,c,II} = V_{Rk,c,\perp}$ [kN]; temperature range 50/80°C and 72/120°C															
Mean compressive strength / Min. compressive strength single brick [1]	Use conditions	Effective anchorage depth h_{ef} [mm]													
		50	100	50	100	50	≥100	50	≥100	50	≥100	85		85	
15 / 12 N/mm²	w/w w/d / d/d	1,5	3,0	1,5	3,0	1,2	2,0	1,2	2,0	1,2	2,0	1,2		1,2	
25 / 20 N/mm²	w/w w/d / d/d	2,5	4,0	2,5	4,0	1,5	3,0	1,5	3,0	1,5	3,0	1,5		1,5	
35 / 28 N/mm²	w/w w/d / d/d	3,0	4,5	3,0	4,5	1,5	3,5	1,5	3,5	1,5	3,5	1,5		1,5	

[1] The minimum compressive strength of the single brick must not be less than 80% of the mean compressive strength.

Factor for job site tests and displacements see annex C123.

Solid calcium silicate brick KS, 8DF, EN 771-2:2011+A1:2015

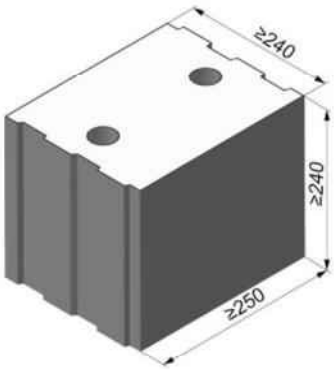

Producer		-		
Nominal dimensions	[mm]	length L	width W	height H
		≥ 250	≥ 240	≥ 240
Mean gross dry density ρ	[kg/dm³]	≥ 2,0		
Mean compressive strength / Min. compressive strength single brick [1]	[N/mm²]	12,5 / 10 or 25 / 20 or 35 / 28		
Standard or annex		EN 771-2:2011+A1:2015		

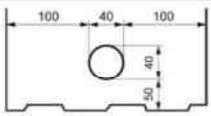

Dimension see also Annex B15

Table C16.1: Installation parameters

Anchor rod			M6		M8		M10		M12		M16		-		-	
Internal threaded anchor UPM-I			-		-		-		-		-		M6	M8	M10	M12
													11x85		15x85	
Anchor rod and internal threaded anchor UPM-I without perforated sleeve																
Effective anchorage depth	h_{ef}	[mm]	50	100	50	100	50	100	50	100	50	100	85			
Max. installation torque	max T_{inst}	[Nm]	4		10								4	10		
Anchor rod and internal threaded anchor UPM-I with perforated sleeve UPM SH 16x85 K																
Effective anchorage depth	h_{ef}	[mm]	-[2]		85				-[2]				85		-[2]	
Max. installation torque	max T_{inst}	[Nm]			10								4	10		
General installation parameters																
Edge distance	$c_{min} = c_{cr}$	[mm]	60													
Spacing	s_{min} II		80													
	s_{cr} II		3x h_{ef}													
	s_{min} ⊥		80													
	s_{cr} ⊥		3x h_{ef}													
Drilling method																
Hammer drilling with hard metal hammer drill																

[1] The minimum compressive strength of the single brick must not be less than 80% of the mean compressive strength.
[2] No performance assessed.

Table C16.2: Group factors

Anchor rods			M6	M8	M10	M12	M16	-		-	
Internal threaded anchor UPM-I			-	-	-	-	-	M6	M8	M10	M12
								11x85		15x85	
Group factors	$\alpha_{g,N}$ (s_{min} II)	[-]	1,5								
	$\alpha_{g,V}$ (s_{min} II)		1,2								
	$\alpha_{g,N}$ (s_{min} ⊥)		1,5								
	$\alpha_{g,V}$ (s_{min} ⊥)		1,2								

Upat injection system UPM 44 for masonry

Performance
Solid calcium silicate brick KS, 8DF, dimensions, installation parameters, Group factors

Annex C16
Appendix 45 / 153

Solid calcium silicate brick KS, 8DF, EN 771-2:2011+A1:2015

Table C17.1: Characteristic resistance to pull-out failure or brick breakout failure of a single anchor under tension loading

Anchor rod	M6	M8	M10	M12	M16	-		-		M8	M10	-	
Internal threaded anchor UPM-I	-	-	-	-	-	M6	M8	M10	M12	-	-	M6	M8
						11x85		15x85				11x85	
Perforated sleeve UPM SH K	-	-	-	-	-	-		-		16x85			

$N_{Rk} = N_{Rk,p} = N_{Rk,b} = N_{Rk,p,c} = N_{Rk,b,c}$ [kN]; temperature range 50/80°C [2)]

Mean compressive strength / Min. compressive strength single brick [1)]	Use conditions	Effective anchorage depth h_{ef} [mm] ≥ 50					85				
12,5 / 10 N/mm²	w/w | w/d	3,0	4,0	4,5	4,5	3,5	3,0	3,5	4,5	3,0	4,5
	d/d	5,0	7,0	7,0	7,0	5,5	5,0	5,5	8,0	5,0	8,0
25 / 20 N/mm²	w/w | w/d	4,5	6,0	6,0	6,0	5,0	4,5	5,0	6,5	4,5	6,5
	d/d	7,5	10,0	10,0	10,0	7,5	7,5	7,5	11,0	7,5	11
35 / 28 N/mm²	w/w | w/d	5,0	8,0	8,5	8,5	7,0	5,0	7,0	8,5	5,0	8,5
	d/d	8,5	12,0	12,0	12,0	11,0	8,5	11,0	12,0	8,5	12

[1)] The minimum compressive strength of the single brick must not be less than 80% of the mean compressive strength.

[2)] For temperature range 72/120°C: $N_{Rk\ (72/120°C)} = 0{,}83 \cdot N_{Rk\ (50/80°C)}$.

Table C17.2: Characteristic resistance to local brick failure or brick edge failure of a single anchor under shear loading

Anchor rod	M6	M8	M10	M12	M16	-		-		M8	M10	-	
Internal threaded anchor UPM-I	-	-	-	-	-	M6	M8	M10	M12	-	-	M6	M8
						11x85		15x85				11x85	
Perforated sleeve UPM SH K	-	-	-	-	-	-		-		16x85			

$V_{Rk} = V_{Rk,b} = V_{Rk,c,II} = V_{Rk,c,\perp}$ [kN]; temperature range 50/80°C and 72/120°C

Mean compressive strength / Min. compressive strength single brick [1)]	Use conditions	Effective anchorage depth h_{ef} [mm] ≥ 50			85				
12,5 / 10 N/mm²	w/w | w/d d/d	2,5	4,5		2,5	4,5	4,5	2,5	4,5
25 / 20 N/mm²	w/w | w/d d/d	4,0	6,5		4,0	6,5	6,5	4,0	6,5
35 / 28 N/mm²	w/w | w/d d/d	5,0	9,0		5,0	9,0	9,0	5,0	9,0

[1)] The minimum compressive strength of the single brick must not be less than 80% of the mean compressive strength.

Factor for job site tests and displacements see annex C123.

Solid calcium silicate brick KS, EN 771-2:2011+A1:2015

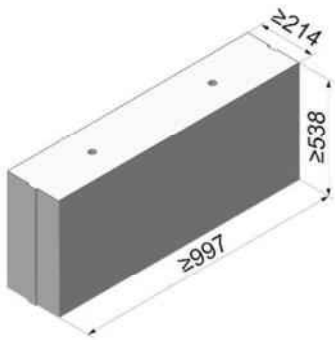

Producer		e.g. Calduran		
Nominal dimensions	[mm]	length L	width W	height H
		≥ 997	≥ 214	≥ 538
Mean gross dry density ρ	[kg/dm³]	1,8		2,2
Mean compressive strength / Min. compressive strength single brick [1]	[N/mm²]	12,5 / 10 or 25 / 20		45 / 36
Standard or annex		EN 771-2:2011+A1:2015		



Table C18.1: Installation parameters

Anchor rod			**M6**		**M8**		**M10**		**M12**		**M16**		-		-	
Internal threaded anchor UPM-I			-		-		-		-		-		**M6**	**M8**	**M10**	**M12**
													11x85		**15x85**	
Anchor rod and internal threaded anchor UPM-I without perforated sleeve																
Effective anchorage depth	h_{ef}	[mm]	50	100	50	100	50	100	50	100	50	100	85			
Max. installation torque	max T_{inst}	[Nm]	4		10								4		10	
General installation parameters																
Edge distance	$c_{min} = c_{cr}$	[mm]	75													
Spacing	s_{cr} II = s_{min} II		3x h_{ef}													
	$s_{cr} \perp = s_{min} \perp$		3x h_{ef}													
Drilling method																
Hammer drilling with hard metal hammer drill																

[1] The minimum compressive strength of the single brick must not be less than 80% of the mean compressive strength.

Table C18.2: Group factors

Anchor rod		**M6**	**M8**	**M10**	**M12**	**M16**	-		-	
Internal threaded anchor UPM-I		-	-	-	-	-	**M6**	**M8**	**M10**	**M12**
							11x85		**15x85**	
Group factors	$\alpha_{g,N}$ (s_{min} II)	[-]	2							
	$\alpha_{g,V}$ (s_{min} II)									
	$\alpha_{g,N}$ ($s_{min} \perp$)									
	$\alpha_{g,V}$ ($s_{min} \perp$)									

Upat injection system UPM 44 for masonry

Performance
Solid calcium silicate brick KS, dimensions, installation parameters, Group factors

Annex C18
Appendix 47 / 153

Solid calcium silicate brick KS, EN 771-2:2011+A1:2015

Table C19.1: Characteristic resistance to pull-out failure or brick breakout failure of a single anchor under tension loading

Anchor rod		**M6**		**M8**		**M10**		**M12**		**M16**		-		-	
Internal threaded anchor UPM-I		-		-		-		-		-		**M6** | **M8**		**M10** | **M12**	
												11x85		**15x85**	
$N_{Rk} = N_{Rk,p} = N_{Rk,b} = N_{Rk,p,c} = N_{Rk,b,c}$ [kN]; temperature range 50/80°C [2)]															
Mean compressive strength / Min. compressive strength single brick [1)]	Use conditions	Effective anchorage depth h_{ef} [mm]													
		50	100	50	100	50	100	50	100	50	100	85			
12,5 / 10 N/mm²	w/w | w/d	4,0		4,0	7,0	5,0	6,0	5,0	6,0	5,5	7,5	5,5			
	d/d	7,0		7,0	12,0	8,0	9,5	8,0	10,0	9,0	11,5	9,0			
25 / 20 N/mm²	w/w | w/d	5,5		6,0	10,0	7,0	8,5	7,0	9,0	8,0	11,0	8,0			
	d/d	8,5		10,5	12,0	11,5	12,0	11,0	12,0	12,0	12,0	12,0			
45 / 36 N/mm²	w/w | w/d	4,5		8,0	12,0	11,5	12,0	12,0	12,0	12,0	12,0	12,0			
	d/d	8,0		12,0	12,0	12,0	12,0	12,0	12,0	12,0	12,0	12,0			

[1)] The minimum compressive strength of the single brick must not be less than 80% of the mean compressive strength.

[2)] For temperature range 72/120°C: $N_{Rk\,(72/120°C)} = 0{,}83 \cdot N_{Rk\,(50/80°C)}$.

Table C19.2: Characteristic resistance to local brick failure or brick edge failure of a single anchor under shear loading

Anchor rod		**M6**	**M8**	**M10**	**M12**	**M16**	-		-	
Internal threaded anchor UPM-I		-	-	-	-	-	**M6** | **M8**		**M10** | **M12**	
							11x85		**15x85**	
$V_{Rk} = V_{Rk,b} = V_{Rk,c,II} = V_{Rk,c,\perp}$ [kN]; temperature range 50/80°C and 72/120°C										
Mean compressive strength / Min. compressive strength single brick [1)]	Use conditions	Effective anchorage depth h_{ef} [mm]								
		≥ 50					85			
12,5 / 10 N/mm²	w/w | w/d d/d	3,0	5,0	5,5	4,0	4,0	3,0	5,0	5,5	4,0
25 / 20 N/mm²	w/w | w/d d/d	4,5	7,0	7,5	6,0	6,0	4,5	7,0	7,5	6,0
45 / 36 N/mm²	w/w | w/d d/d	4,5	9,0	11,0	12,0	12,0	4,5	9,0	11,0	12,0

[1)] The minimum compressive strength of the single brick must not be less than 80% of the mean compressive strength.

Factor for job site tests and displacements see annex C123.

Solid calcium silicate brick KS, EN 771-2:2011+A1:2015

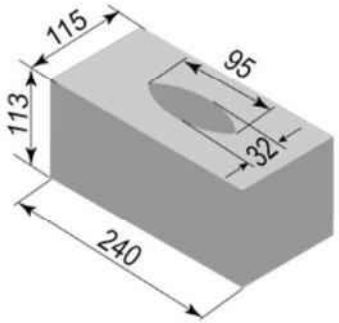

Producer		-		
Nominal dimensions	[mm]	length L	width W	height H
		≥ 240	≥ 115	≥ 113
Mean gross dry density ρ	[kg/dm³]	1,8		
Mean compressive strength / Min. compressive strength single brick [1)]	[N/mm²]	12,5 / 10 or 25 / 20		
Standard or annex		EN 771-2:2011+A1:2015		

Table C20.1: Installation parameters
(Pre-positioned installation with perforated sleeve UPM SH K)

Anchor rod	**M6**	**M8**	**-**	**M8**	**M10**	**M8**	**M10**	**-**	**M12**	**M16**	**M12**	**M16**
Internal threaded anchor UPM-I	**-**		**M6** / **11x85**	**M8** / **11x85**	**-**	**-**		**M10** / **15x85**	**M12** / **15x85**	**-**	**-**	
Perforated sleeve UPM SH K	**12x85**		**16x85**			**16x130**		**20x85**			**20x130**	

Anchor rod and internal threaded anchor UPM-I with perforated sleeve UPM SH K							
Max. installation torque	$\max T_{inst}$	[Nm]	2	4			

General installation parameters							
Edge distance	$c_{min} = c_{cr}$	[mm]	100				
Spacing	$s_{min} \parallel$		255	255	390	255	390
	$s_{cr} \parallel$						
	$s_{min} \perp$						
	$s_{cr} \perp$						

Drilling method
Hammer drilling with hard metal hammer drill

[1)] The minimum compressive strength of the single brick must not be less than 80% of the mean compressive strength.

Table C20.2: Group factors

Anchor rod	**M6**	**M8**	**M8**	**M10**	**M8**	**M10**	**M12**	**M16**	**M12**	**M16**
Perforated sleeve UPM SH K	**12x85**		**16x85**		**16x130**		**20x85**		**20x130**	

Group factors	$\alpha_{g,N}(s_{min} \parallel) = \alpha_{g,V}(s_{min} \parallel)$ $\alpha_{g,N}(s_{min} \perp) = \alpha_{g,V}(s_{min} \perp)$	[-]	2

Solid calcium silicate brick KS, EN 771-2:2011+A1:2015

Table C21.1: Installation parameters
(Push through installation with perforated sleeve UPM SH K)

Anchor rod			**M10**	**M12**	**M16**
Perforated sleeve UPM SH K			**18x130/200**		**22x130/200**
Anchor rod with perforated sleeve UPM SH K					
Max. installation torque	$\max T_{inst}$	[Nm]	4		
General installation parameters					
Edge distance	$c_{min} = c_{cr}$	[mm]	100		
Spacing	$s_{min} \parallel$		390		
	$s_{cr} \parallel$		390		
	$s_{min} \perp$		390		
	$s_{cr} \perp$		390		
Drilling method					
Hammer drilling with hard metal hammer drill					

Table C21.2: Group factors

Anchor rod			**M10**	**M12**	**M16**
Perforated sleeve UPM SH K			**18x130/200**		**22x130/200**
Group factors	$\alpha_{g,N}$ ($s_{min} \parallel$)	[-]	2		
	$\alpha_{g,V}$ ($s_{min} \parallel$)				
	$\alpha_{g,N}$ ($s_{min} \perp$)				
	$\alpha_{g,V}$ ($s_{min} \perp$)				

Solid calcium silicate brick, EN 771-2:2011+A1:2015

Table C22.1: Characteristic resistance to pull-out failure or brick breakout failure of a single anchor under tension loading (Pre-positioned installation)

Anchor rod		**M6**	**M8**	**-**	**M8**	**M10**	**M8**	**M10**	**-**	**M12**	**M16**	**M12**	**M16**
Internal threaded anchor UPM-I		**-**		**M6** / **11x85**	**M8** / **11x85**	**-**	**-**		**M10** / **15x85**	**M12** / **15x85**	**-**	**-**	
Perforated sleeve UPM SH K		**12x85**		**16x85**			**16x130**		**20x85**			**20x130**	
$N_{Rk} = N_{Rk,p} = N_{Rk,b} = N_{Rk,p,c} = N_{Rk,b,c}$ [kN]; temperature range 50/80°C [2)]													
Mean compressive strength / Min. compressive strength single brick [1)]	Use con-ditions												
12,5 / 10 N/mm²	w/w	3,5		2,0	2,0		2,0		6,5			4,5	
	d/d	6,0		4,0	3,5		3,5		10,5			7,0	
25 / 20 N/mm²	w/w	5,0		3,0	3,0		3,0		9,5			6,0	
	d/d	8,5		5,5	5,5		5,5		12,0			10,0	

[1)] The minimum compressive strength of the single brick must not be less than 80% of the mean compressive strength.
[2)] For temperature range 72/120°C no performance assessed.

Table C22.2: Characteristic resistance to pull-out failure or brick breakout failure of a single anchor under tension loading (Push through installation)

Anchor rod		**M10**	**M12**	**M16**
Perforated sleeve UPM SH K		**18x130/200**		**22x130/200**
$N_{Rk} = N_{Rk,p} = N_{Rk,b} = N_{Rk,p,c} = N_{Rk,b,c}$ [kN]; temperature range 50/80°C [2)]				
Mean compressive strength / Min. compressive strength single brick [1)]	Use con-ditions			
12,5 / 10 N/mm²	w/w	2,0		4,5
	d/d	3,5		7,0
25 / 20 N/mm²	w/w	3,0		6,0
	d/d	5,5		10,0

[1)] The minimum compressive strength of the single brick must not be less than 80% of the mean compressive strength.
[2)] For temperature range 72/120°C no performance assessed.

Factor for job site tests and displacements see annex C123.

Table C23.1: Characteristic resistance to local brick failure or brick edge failure of a single anchor under shear loading (Pre-positioned installation)

Anchor rod	**M6**	**M8**	**-**		**M8**	**M10**	**M8**	**M10**	**-**		**M12**	**M16**	**M12**	**M16**
Internal threaded anchor UPM-I	**-**		**M6**	**M8**	**-**		**-**		**M10**	**M12**	**-**		**-**	
			11x85						**15x85**					
Perforated sleeve UPM SH K	**12x85**		**16x85**				**16x130**		**20x85**				**20x130**	

$V_{Rk} = V_{Rk,b} = V_{Rk,c,II} = V_{Rk,c,\perp}$ **[kN]; temperature range 50/80°C** [2]			
Mean compressive strength / Min. compressive strength single brick [1]	Use conditions		
12,5 / 10 N/mm²	w/w	3,0	3,5
	d/d		
25 / 20 N/mm²	w/w	4,0	5,5
	d/d		

[1] The minimum compressive strength of the single brick must not be less than 80% of the mean compressive strength.
[2] For temperature range 72/120°C no performance assessed.

Table C23.2: Characteristic resistance to local brick failure or brick edge failure of a single anchor under shear loading (Push through installation)

Anchor rod	**M10**	**M12**	**M16**
Perforated sleeve UPM SH K	**18x130/200**		**22x130/200**

$V_{Rk} = V_{Rk,b} = V_{Rk,c,II} = V_{Rk,c,\perp}$ **[kN]; temperature range 50/80°C** [2]			
Mean compressive strength / Min. compressive strength single brick [1]	Use conditions		
12,5 / 10 N/mm²	w/w	3,5	
	d/d		
25 / 20 N/mm²	w/w	5,5	
	d/d		

[1] The minimum compressive strength of the single brick must not be less than 80% of the mean compressive strength.
[2] For temperature range 72/120°C no performance assessed.

Factor for job site tests and displacements see annex C123.

Perforated calcium silicate brick KSL, 3DF, EN 771-2:2011+A1:2015

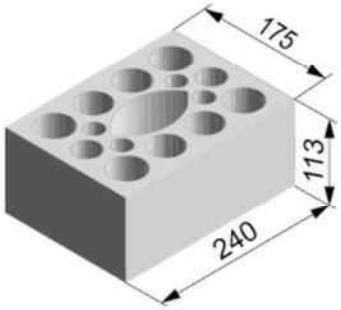

Producer			-	
Nominal dimensions	[mm]	length L	width W	height H
		240	175	113
Mean gross dry density ρ	[kg/dm³]	≥ 1,4		
Mean compressive strength / Min. compressive strength single brick [1]	[N/mm²]	10 / 8 or 12,5 / 10 or 15 / 12 or 20 / 16 or 25 / 20		
Standard or annex		EN 771-2:2011+A1:2015		

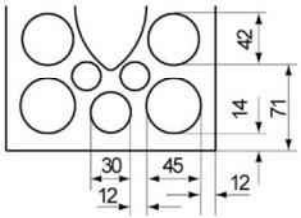

Dimension see also Annex B15

Table C24.1: Installation parameters
(Pre-positioned installation with perforated sleeve UPM SH K)

Anchor rod	**M6**	**M8**	**M6**	**M8**	**-**		**M8**	**M10**	**M8**	**M10**	**-**		**M12**	**M16**	**M12**	**M16**
Internal threaded anchor UPM-I	**-**		**-**		**M6**	**M8**	**-**		**-**		**M10**	**M12**	**-**		**-**	
					11x85						**15x85**					
Perforated sleeve UPM SH K	**12x50**		**12x85**		**16x85**				**16x130**		**20x85**				**20x130**	
Anchor rod and internal threaded anchor UPM-I with perforated sleeve UPM SH K																
Max. installation torque	$\max T_{inst}$	[Nm]	2													
General installation parameters																
Edge distance	$c_{min} = c_{cr}$	[mm]	60		80											
Spacing	s_{min} ∥		100													
	s_{cr} ∥		240													
	s_{min} ⊥		115													
	s_{cr} ⊥		115													
Drilling method																
Hammer drilling with hard metal hammer drill																

[1] The minimum compressive strength of the single brick must not be less than 80% of the mean compressive strength.

Table C24.2: Group factors

Anchor rod	**M6**	**M8**	**M6**	**M8**	**-**		**M8**	**M10**	**M8**	**M10**	**-**		**M12**	**M16**	**M12**	**M16**
Internal threaded anchor UPM-I	**-**		**-**		**M6**	**M8**	**-**		**-**		**M10**	**M12**	**-**		**-**	
					11x85						**15x85**					
Perforated sleeve UPM SH K	**12x50**		**12x85**		**16x85**				**16x130**		**20x85**				**20x130**	
Group factors $\frac{\alpha_{g,N}(s_{min}\parallel)}{\alpha_{g,V}(s_{min}\parallel)}$	[-]		1,5													
$\frac{\alpha_{g,N}(s_{min}\perp)}{\alpha_{g,V}(s_{min}\perp)}$			2,0													

Upat injection system UPM 44 for masonry

Performance
Perforated calcium silicate brick KSL, 3DF, dimensions, installation parameters, Group factors

Annex C24
Appendix 53 / 153

Perforated calcium silicate brick KSL, 3DF, EN 771-2:2011+A1:2015

Table C25.1: Installation parameters
(Push through installation with perforated sleeve UPM SH K)

Anchor rod			**M10**	**M12**	**M16**
Perforated sleeve UPM SH K			**18x130/200**		**22x130/200**
Anchor rod with perforated sleeve UPM SH K					
Max. installation torque	max T_{inst}	[Nm]	2		
General installation parameters					
Edge distance	$c_{min} = c_{cr}$	[mm]	80		
Spacing	s_{min} ∥		100		
	s_{cr} ∥		240		
	s_{min} ⊥		115		
	s_{cr} ⊥		115		
Drilling method					
Hammer drilling with hard metal hammer drill					

Table C25.2: Group factors

Anchor rod			**M10**	**M12**	**M16**
Perforated sleeve UPM SH K			**18x130/200**		**22x130/200**
Group factors	$\alpha_{g,N}$ (s_{min} ∥)	[-]	1,5		
	$\alpha_{g,V}$ (s_{min} ∥)				
	$\alpha_{g,N}$ (s_{min} ⊥)		2,0		
	$\alpha_{g,V}$ (s_{min} ⊥)				

Perforated calcium silicate brick KSL, 3DF, EN 771-2:2011+A1:2015

Table C26.1: Characteristic resistance to pull-out failure or brick breakout failure of a single anchor under tension loading (Pre-positioned installation)

Anchor rod	**M6**	**M8**	**M6**	**M8**	**-**		**M8**	**M10**	**M8**	**M10**	**-**		**M12**	**M16**	**M12**	**M16**
Internal threaded anchor UPM-I	**-**		**-**		**M6**	**M8**	**-**		**-**		**M10**	**M12**	**-**		**-**	
					11x85						**15x85**					
Perforated sleeve UPM SH K	**12x50**		**12x85**		**16x85**				**16x130**		**20x85**				**20x130**	
$N_{Rk} = N_{Rk,p} = N_{Rk,b} = N_{Rk,p,c} = N_{Rk,b,c}$ [kN]; temperature range 50/80°C [2)]																
Mean compressive strength/ Min. comp. strength single brick [1)]	Use conditions															
10 / 8 N/mm²	w/w | w/d		1,5		2,0				2,0		2,0				2,0	
	d/d		1,5		2,0				2,5		2,5				2,5	
12,5 / 10 N/mm²	w/w | w/d		2,0		2,0				2,5		2,5				2,5	
	d/d		2,0		2,5				3,0		3,0				3,0	
15 / 12 N/mm²	w/w | w/d		2,5		2,5				3,0		3,0				3,0	
	d/d		2,5		3,0				3,5		3,5				3,5	
20 / 16 N/mm²	w/w | w/d		3,0		3,5				4,5		4,5				4,5	
	d/d		3,5		4,0				4,5		4,5				4,5	
25 / 20 N/mm²	w/w | w/d		4,0		4,5				5,5		5,5				5,5	
	d/d		4,5		5,0				6,0		6,0				6,0	

[1)] The minimum compressive strength of the single brick must not be less than 80% of the mean compressive strength.
[2)] For temperature range 72/120°C: $N_{Rk\ (72/120°C)} = 0{,}83 \cdot N_{Rk\ (50/80°C)}$.

Table C26.2: Characteristic resistance to pull-out failure or brick breakout failure of a single anchor under tension loading (Push through installation)

Anchor rod	**M10**	**M12**	**M16**
Perforated sleeve UPM SH K	**18x130/200**		**22x130/200**
$N_{Rk} = N_{Rk,p} = N_{Rk,b} = N_{Rk,p,c} = N_{Rk,b,c}$ [kN]; temperature range 50/80°C [2)]			
Mean compressive strength / Min. comp. strength single brick [1)]	Use conditions		
10 / 8 N/mm²	w/w | w/d	2,0	
	d/d	2,5	
12,5 / 10 N/mm²	w/w | w/d	2,5	
	d/d	3,0	
15 / 12 N/mm²	w/w | w/d	3,0	
	d/d	3,5	
20 / 16 N/mm²	w/w | w/d	4,5	
	d/d	4,5	
25 / 20 N/mm²	w/w | w/d	5,5	
	d/d	6,0	

[1)] The minimum compressive strength of the single brick must not be less than 80% of the mean compressive strength.
[2)] For temperature range 72/120°C: $N_{Rk\ (72/120°C)} = 0{,}83 \cdot N_{Rk\ (50/80°C)}$.

Factor for job site tests and displacements see annex C123.

Perforated calcium silicate brick KSL, 3DF, EN 771-2:2011+A1:2015

Table C27.1: Characteristic resistance to local brick failure or brick edge failure of a single anchor under shear loading (Pre-positioned installation)

Anchor rod		**M6**	**M8**	**M6**	**M8**	**-**		**M8**	**M10**	**M8**	**M10**	**-**		**M12**	**M16**	**M12**	**M16**
Internal threaded anchor UPM-I		**-**		**-**		**M6** / **11x85**	**M8** / **11x85**	**-**		**-**		**M10** / **15x85**	**M12** / **15x85**	**-**		**-**	
Perforated sleeve UPM SH K		**12x50**		**12x85**		**16x85**				**16x130**		**20x85**				**20x130**	
$V_{Rk} = V_{Rk,b} = V_{Rk,c,II} = V_{Rk,c,\perp}$ **[kN]; temperature range 50/80°C and 72/120°C**																	
Mean compressive strength / Min. compressive strength single brick [1]	Use conditions																
10 / 8 N/mm²	w/w, w/d, d/d	1,5						3,0						2,5	3,0	2,5	
12,5 / 10 N/mm²	w/w, w/d, d/d	2,0						3,5									
15 / 12 N/mm²	w/w, w/d, d/d	2,5						4,5						4,0	4,5	4,0	
20 / 16 N/mm²	w/w, w/d, d/d	3,0	3,5	3,0	3,5	3,0		6,0						5,5	6,0	5,5	
25 / 20 N/mm²	w/w, w/d, d/d	4,0	4,5	4,0	4,5	4,0		7,5						6,5	7,5	6,5	

[1] The minimum compressive strength of the single brick must not be less than 80% of the mean compressive strength.

Table C27.2: Characteristic resistance to local brick failure or brick edge failure of a single anchor under shear loading (Push through installation)

Anchor rod	**M10**	**M12**	**M16**
Perforated sleeve UPM SH K	**18x130/200**		**22x130/200**
$V_{Rk} = V_{Rk,b} = V_{Rk,c,II} = V_{Rk,c,\perp}$ **[kN]; temperature range 50/80°C and 72/120°C**			
Mean compressive strength / Min. compressive strength single brick [1]	Use conditions		
10 / 8 N/mm²	w/w, w/d, d/d	3,0	2,5
12,5 / 10 N/mm²		3,5	3,5
15 / 12 N/mm²		4,5	4,0
20 / 16 N/mm²		6,0	5,5
25 / 20 N/mm²		7,5	6,5

[1] The minimum compressive strength of the single brick must not be less than 80% of the mean compressive strength.

Factor for job site tests and displacements see annex C123.

Vertical perforated brick HLz, EN 771-1:2011+A1:2015

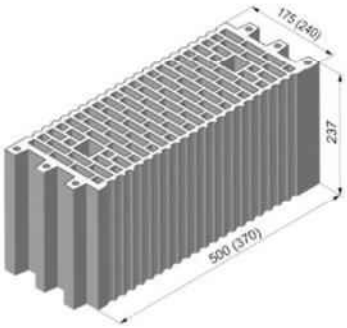

Producer			e.g. Wienerberger, Poroton	
Nominal dimensions	[mm]	length L	width W	height H
		500	175	237
		370	240	237
Mean gross dry density ρ	[kg/dm³]	≥ 1,0		
Mean compressive strength / Min. compressive strength single brick [1]	[N/mm²]	5 / 4 or 7,5 / 6 or 10 / 8 or 12,5 / 10 or 15 / 12		
Standard or annex		EN 771-1:2011+A1:2015		

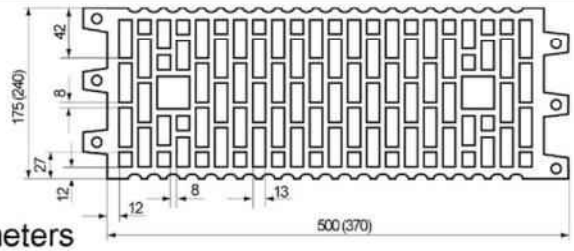

Dimension see also Annex B15

Table C28.1: Installation parameters

Anchor rod	**M6**	**M8**	**M6**	**M8**	**-**		**M8**	**M10**	**M8**	**M10**	**-**		**M12**	**M16**	**M12**	**M16**
Internal threaded anchor UPM-I	**-**		**-**		**M6**	**M8**	**-**		**-**		**M10**	**M12**	**-**		**-**	
					11x85						**15x85**					
Perforated sleeve UPM SH K	**12x50**		**12x85**		**16x85**				**16x130**		**20x85**				**20x130**	

Anchor rod and internal threaded anchor UPM-I with perforated sleeve UPM SH K			
Max. installation torque	max T_{inst}	[Nm]	2
General installation parameters			
Edge distance	$c_{min} = c_{cr}$	[mm]	100
Spacing	s_{min} ∥		100
	s_{cr} ∥		500 (370)
	s_{min} ⊥		100
	s_{cr} ⊥		240
Drilling method			
Hammer drilling with hard metal hammer drill			

[1] The minimum compressive strength of the single brick must not be less than 80% of the mean compressive strength.

Table C28.2: Group factors

Anchor rod	**M6**	**M8**	**M6**	**M8**	**-**		**M8**	**M10**	**M8**	**M10**	**-**		**M12**	**M16**	**M12**	**M16**
Internal threaded anchor UPM-I	**-**		**-**		**M6**	**M8**	**-**		**-**		**M10**	**M12**	**-**		**-**	
					11x85						**15x85**					
Perforated sleeve UPM SH K	**12x50**		**12x85**		**16x85**				**16x130**		**20x85**				**20x130**	

Group factors	$\alpha_{g,N}$ (s_{min} ∥) = $\alpha_{g,V}$ (s_{min} ∥) / $\alpha_{g,N}$ (s_{min} ⊥) = $\alpha_{g,V}$ (s_{min} ⊥)	[-]	1

Upat injection system UPM 44 for masonry

Performance
Vertical perforated brick HLz, dimensions, installation parameters, Group factors

Annex C28
Appendix 57 / 153

Vertical perforated brick HLz, EN 771-1:2011+A1:2015

Table C29.1: Characteristic resistance to pull-out failure or brick breakout failure of a single anchor under tension loading

Anchor rod		M6 M8	M6 M8	-	M8 M10	M8 M10	-	M12 M16	M12 M16
Internal threaded anchor UPM-I		-	-	M6 M8 11x85	-	-	M10 M12 15x85	-	-
Perforated sleeve UPM SH K		12x50	12x85	16x85		16x130	20x85		20x130
$N_{Rk} = N_{Rk,p} = N_{Rk,b} = N_{Rk,p,c} = N_{Rk,b,c}$ [kN]; temperature range 50/80°C [2]									
Mean compressive strength / Min. comp. strength single brick [1]	Use conditions								
5 / 4 N/mm²	w/w w/d	0,30		0,90					1,20
	d/d	0,40		0,90					1,20
7,5 / 6 N/mm²	w/w w/d	0,50		1,50					2,00
	d/d	0,60		1,50					2,00
10 / 8 N/mm²	w/w w/d	0,75		2,00					2,50
	d/d	0,75		2,00					2,50
12,5 / 10 N/mm²	w/w w/d	0,90		2,50					3,00
	d/d	0,90		2,50					3,50
15 / 12 N/mm²	w/w w/d	0,90		3,00					3,50
	d/d	1,20		3,00					4,00

[1] The minimum compressive strength of the single brick must not be less than 80% of the mean compressive strength.

[2] For temperature range 72/120°C: $N_{Rk\,(72/120°C)} = 0{,}83 \cdot N_{Rk\,(50/80°C)}$.

Table C29.2: Characteristic resistance to local brick failure or brick edge failure of a single anchor under shear loading

Anchor rod		M6 M8	M6 M8	-	M8 M10	M8 M10	-	M12 M16	M12 M16
Internal threaded anchor UPM-I		-	-	M6 M8 11x85	-	-	M10 M12 15x85	-	-
Perforated sleeve UPM SH K		12x50	12x85	16x85		16x130	20x85		20x130
$V_{Rk} = V_{Rk,b} = V_{Rk,c,II} = V_{Rk,c,\perp}$ [kN]; temperature range 50/80°C and 72/120°C									
Mean compressive strength / Min. comp. strength single brick [1]	Use conditions								
5 / 4 N/mm²	w/w w/d d/d	0,50				0,60	0,50		0,60
7,5 / 6 N/mm²		0,75				0,90	0,75		0,90
10 / 8 N/mm²		0,90				1,20	0,90		1,20
12,5 / 10 N/mm²		1,20				1,50	1,20		1,50
15 / 12 N/mm²		1,50				2,00	1,50		2,00

[1] The minimum compressive strength of the single brick must not be less than 80% of the mean compressive strength.

Factor for job site tests and displacements see annex C123.

Vertical perforated brick HLz, 2DF, EN 771-1:2011+A1:2015

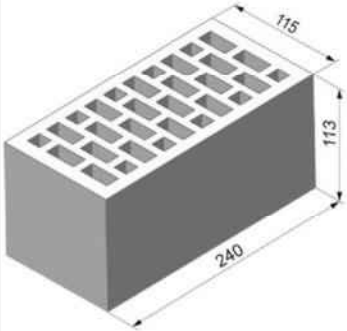

Producer		e.g. Wienerberger		
Nominal dimensions	[mm]	length L	width W	height H
		240	115	113
Mean gross dry density ρ	[kg/dm³]	≥ 1,4		
Mean compressive strength / Min. compressive strength single brick [1]	[N/mm²]	7,5 / 6 or 12,5 / 10 or 20 / 16 or 25 / 20 or 35 / 28		
Standard or annex		EN 771-1:2011+A1:2015		

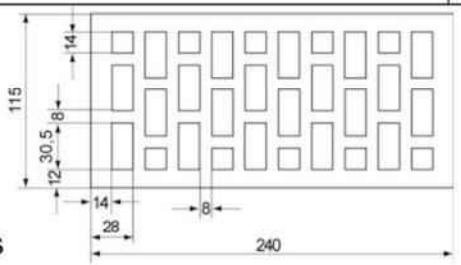

Dimension see also Annex B15

Table C30.1: Installation parameters

Anchor rod			M6	M8	M6	M8	-		M8	M10	-		M12	M16
Internal threaded anchor UPM-I			-		-		M6	M8	-		M10	M12	-	
							11x85				15x85			
Perforated sleeve UPM SH K			12x50		12x85		16x85				20x85			
Anchor rod and internal threaded anchor UPM-I with perforated sleeve UPM SH K														
Max. installation torque	max T_{inst}	[Nm]	2											
General installation parameters														
Edge distance	$c_{min} = c_{cr}$	[mm]	80											
Spacing	s_{cr} II = s_{min} II		240											
	s_{cr} ⊥ = s_{min} ⊥		115											
Drilling method														
Hammer drilling with hard metal hammer drill														

[1] The minimum compressive strength of the single brick must not be less than 80% of the mean compressive strength.

Table C30.2: Group factors

Anchor rod			M6	M8	M6	M8	-		M8	M10	-		M12	M16
Internal threaded anchor UPM-I			-		-		M6	M8	-		M10	M12	-	
							11x85				15x85			
Perforated sleeve UPM SH K			12x50		12x85		16x85				20x85			
Group factors	$\alpha_{g,N}$ (s_{min} II)	[-]	2											
	$\alpha_{g,V}$ (s_{min} II)													
	$\alpha_{g,N}$ (s_{min} ⊥)													
	$\alpha_{g,V}$ (s_{min} ⊥)													

Upat injection system UPM 44 for masonry

Performance
Vertical perforated brick HLz, 2DF, dimensions, installation parameters, Group factors

Annex C30
Appendix 59 / 153

Vertical perforated brick HLz, 2DF, EN 771-1:2011+A1:2015

Table C31.1: Characteristic resistance to pull-out failure or brick breakout failure of a single anchor under tension loading

Anchor rod		**M6**	**M8**	**M6**	**M8**	**-**	**M8**	**M10**	**-**	**M12**	**M16**
Internal threaded anchor UPM-I		-		-		**M6** **M8** **11x85**	-		**M10** **M12** **15x85**	-	
Perforated sleeve UPM SH K		**12x50**		**12x85**		**16x85**			**20x85**		
$N_{Rk} = N_{Rk,p} = N_{Rk,b} = N_{Rk,p,c} = N_{Rk,b,c}$ [kN]; temperature range 50/80°C [2)]											
Mean compressive strength / Min. compressive strength single brick [1)]	Use conditions										
7,5 / 6 N/mm²	w/w w/d	0,75		0,90		0,75			0,90		
	d/d	0,75		1,20		0,75			0,90		
12,5 / 10 N/mm²	w/w w/d	1,20		1,50		1,20			1,50		
	d/d	1,20		2,00		1,20			1,50		
20 / 16 N/mm²	w/w w/d	2,00		2,50		2,00			2,00		
	d/d	2,00		3,00		2,00			2,50		
25 / 20 N/mm²	w/w w/d	2,50		3,50		2,50			3,00		
	d/d	2,50		4,00		2,50			3,00		
35 / 28 N/mm²	w/w w/d	3,00		5,00		3,50			4,00		
	d/d	3,50		5,50		3,50			4,50		

[1)] The minimum compressive strength of the single brick must not be less than 80% of the mean compressive strength.

[2)] For temperature range 72/120°C: $N_{Rk\,(72/120°C)} = 0{,}83 \cdot N_{Rk\,(50/80°C)}$.

Table C31.2: Characteristic resistance to local brick failure or brick edge failure of a single anchor under shear loading

Anchor rod		**M6**	**M8**	**M6**	**M8**	**-**	**M8**	**M10**	**-**	**M12**	**M16**
Internal threaded anchor UPM-I		-		-		**M6** **M8** **11x85**	-		**M10** **M12** **15x85**	-	
Perforated sleeve UPM SH K		**12x50**		**12x85**		**16x85**			**20x85**		
$V_{Rk} = V_{Rk,b} = V_{Rk,c,II} = V_{Rk,c,\perp}$ [kN]; temperature range 50/80°C and 72/120°C											
Mean compressive strength / Min. compressive strength single brick [1)]	Use conditions										
7,5 / 6 N/mm²	w/w w/d d/d	1,2	1,5	1,2	2,0	1,2	1,5		2,5		
12,5 / 10 N/mm²		2,0	2,5	2,0	4,0	2,0	2,5		4,5		
20 / 16 N/mm²		3,0	3,5	3,0	6,0	3,0	3,5		7,0		
25 / 20 N/mm²		4,0	4,5	4,0	7,5	4,0	4,5		8,5		
35 / 28 N/mm²		5,0	6,5	5,0	9,5	5,0	6,5		12,0		

[1)] The minimum compressive strength of the single brick must not be less than 80% of the mean compressive strength.

Factor for job site tests and displacements see annex C123.

Vertical perforated brick HLz, U8, EN 771-1:2011+A1:2015

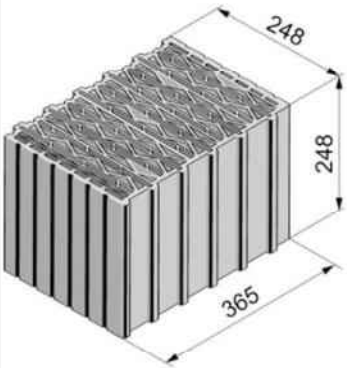

Producer		e.g. Wienerberger		
Nominal dimensions	[mm]	length L	width W	height H
		248	365	248
Mean gross dry density ρ	[kg/dm³]	0,6		
Mean compressive strength / Min. compressive strength single brick [1]	[N/mm²]	5 / 4 or 7,5 / 6 or 10 / 8		
Standard or annex		EN 771-1:2011+A1:2015		

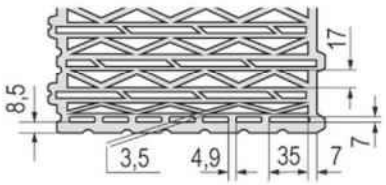

Dimension see also Annex B15

Table C32.1: Installation parameters
(Pre-positioned installation with perforated sleeve UPM SH K)

Anchor rod			M6	M8	M6	M8	-		M8	M10	M8	M10	-		M12	M16	M12	M16	M12	M16
Internal threaded anchor UPM-I			-		-		M6	M8	-		-		M10	M12	-		-		-	
							11x85						15x85							
Perforated sleeve UPM SH K			12x50		12x85		16x85				16x130		20x85				20x130		20x200	
Anchor rod and internal threaded anchor UPM-I with perforated sleeve UPM SH K																				
Max. installation torque	max T_{inst}	[Nm]	3	5	3	5	3	5	5											
General installation parameters																				
Edge distance	$c_{min} = c_{cr}$	[mm]	60																	
Spacing	s_{min} ∥		80																	
	s_{cr} ∥		250																	
	s_{min} ⊥		80																	
	s_{cr} ⊥		250																	
Drilling method																				
Rotary drilling with carbide drill																				

[1] The minimum compressive strength of the single brick must not be less than 80% of the mean compressive strength.

Table C32.2: Group factors

Anchor rod			M6	M8	M6	M8	-		M8	M10	M8	M10	-		M12	M16	M12	M16	M12	M16
Internal threaded anchor UPM-I			-		-		M6	M8	-		-		M10	M12	-		-		-	
							11x85						15x85							
Perforated sleeve UPM SH K			12x50		12x85		16x85				16x130		20x85				20x130		20x200	
Group factors	$\alpha_{g,N}$ (s_{min} ∥)	[-]	1,3																	
	$\alpha_{g,V}$ (s_{min} ∥)		1,2																	
	$\alpha_{g,N}$ (s_{min} ⊥)		1,3																	
	$\alpha_{g,V}$ (s_{min} ⊥)		1,0																	

Upat injection system UPM 44 for masonry

Performance
Vertical perforated brick HLz, U8, dimensions, installation parameters, Group factors

Annex C32
Appendix 61 / 153

Vertical perforated brick HLz, U8, EN 771-1:2011+A1:2015

Table C33.1: Installation parameters
(Push through installation with perforated sleeve UPM SH K)

Anchor rod			**M10**	**M12**	**M16**
Perforated sleeve UPM SH K			**18x130/200**		**22x130/200**
Anchor rod with perforated sleeve UPM SH K					
Max. installation torque	max T_{inst}	[Nm]	5		
General installation parameters					
Edge distance	$c_{min} = c_{cr}$	[mm]	60		
Spacing	s_{min} II		80		
	s_{cr} II		250		
	s_{min} ⊥		80		
	s_{cr} ⊥		250		
Drilling method					
Rotary drilling with carbide drill					

Table C33.2: Group factors

Anchor rod			**M10**	**M12**	**M16**
Perforated sleeve UPM SH K			**18x130/200**		**22x130/200**
Group factors	$\alpha_{g,N}$ (s_{min} II)	[-]	1,3		
	$\alpha_{g,V}$ (s_{min} II)		1,2		
	$\alpha_{g,N}$ (s_{min} ⊥)		1,3		
	$\alpha_{g,V}$ (s_{min} ⊥)		1,0		

Vertical perforated brick HLz, U8, EN 771-1:2011+A1:2015

Table C34.1: Characteristic resistance to pull-out failure or brick breakout failure of a single anchor under tension loading (Pre-positioned installation)

Anchor rod	**M6**	**M8**	**M6**	**M8**	**-**	**M8**	**M10**	**M8**	**M10**	**-**	**M12**	**M16**	**M12**	**M16**	**M12**	**M16**
Internal threaded anchor UPM-I	**-**		**-**		**M6** **M8** **11x85**	**-**		**-**		**M10** **M12** **15x85**	**-**		**-**		**-**	
Perforated sleeve UPM SH K	**12x50**		**12x85**		**16x85**			**16x130**		**20x85**			**20x130**		**20x200**	

$N_{Rk} = N_{Rk,p} = N_{Rk,b} = N_{Rk,p,c} = N_{Rk,b,c}$ [kN]; temperature range 50/80°C [2)]				
Mean compressive strength / Min. compressive strength single brick [1)]	Use conditions			
5 / 4 N/mm²	w/w	w/d	1,2	1,2
	d/d		1,2	1,5
7,5 / 6 N/mm²	w/w	w/d	1,5	1,5
	d/d		1,5	1,5
10 / 8 N/mm²	w/w	w/d	1,5	2,0
	d/d		2,0	2,0

[1)] The minimum compressive strength of the single brick must not be less than 80% of the mean compressive strength.
[2)] For temperature range 72/120°C: $N_{Rk\,(72/120°C)} = 0{,}83 \cdot N_{Rk\,(50/80°C)}$.

Table C34.2: Characteristic resistance to pull-out failure or brick breakout failure of a single anchor under tension loading (Push through installation)

Anchor rod	**M10**	**M12**	**M16**
Perforated sleeve UPM SH K	**18x130/200**		**22x130/200**

$N_{Rk} = N_{Rk,p} = N_{Rk,b} = N_{Rk,p,c} = N_{Rk,b,c}$ [kN]; temperature range 50/80°C [2)]				
Mean compressive strength / Min. compressive strength single brick [1)]	Use conditions			
5 / 4 N/mm²	w/w	w/d	1,2	
	d/d		1,5	
7,5 / 6 N/mm²	w/w	w/d	1,5	
	d/d		1,5	
10 / 8 N/mm²	w/w	w/d	2,0	
	d/d		2,0	

[1)] The minimum compressive strength of the single brick must not be less than 80% of the mean compressive strength.
[2)] For temperature range 72/120°C: $N_{Rk\,(72/120°C)} = 0{,}83 \cdot N_{Rk\,(50/80°C)}$.

Factor for job site tests and displacements see annex C123.

Vertical perforated brick HLz, U8, EN 771-1:2011+A1:2015

Table C35.1: Characteristic resistance to local brick failure or brick edge failure of a single anchor under shear loading (Pre-positioned installation)

Anchor rod	**M6**	**M8**	**M6**	**M8**	**-**	**M8**	**M10**	**M8**	**M10**	**-**	**M12**	**M16**	**M12**	**M16**	**M12**	**M16**
Internal threaded anchor UPM-I	**-**		**-**		**M6 M8 11x85**	**-**		**-**		**M10 M12 15x85**	**-**		**-**		**-**	
Perforated sleeve UPM SH K	**12x50**		**12x85**		**16x85**			**16x130**		**20x85**			**20x130**		**20x200**	
$V_{Rk} = V_{Rk,b} = V_{Rk,c,II} = V_{Rk,c,\perp}$ [kN]; temperature range 50/80°C and 72/120°C																
Mean compressive strength / Min. compressive strength single brick [1]	Use conditions															
5 / 4 N/mm²	w/w w/d d/d									1,2						
7,5 / 6 N/mm²	w/w w/d d/d									1,5						
10 / 8 N/mm²	w/w w/d d/d									1,5						

[1] The minimum compressive strength of the single brick must not be less than 80% of the mean compressive strength.

Table C35.2: Characteristic resistance to local brick failure or brick edge failure of a single anchor under shear loading (Push through installation)

Anchor rod	**M10**	**M12**	**M16**
Perforated sleeve UPM SH K	**18x130/200**		**22x130/200**
$V_{Rk} = V_{Rk,b} = V_{Rk,c,II} = V_{Rk,c,\perp}$ [kN]; temperature range 50/80°C and 72/120°C			
Mean compressive strength / Min. compressive strength single brick [1]	Use conditions		
5 / 4 N/mm²	w/w w/d d/d	1,2	
7,5 / 6 N/mm²	w/w w/d d/d	1,5	
10 / 8 N/mm²	w/w w/d d/d	1,5	

[1] The minimum compressive strength of the single brick must not be less than 80% of the mean compressive strength.

Factor for job site tests and displacements see annex C123.

Vertical perforated brick HLz, T10, T11, EN 771-1:2011+A1:2015

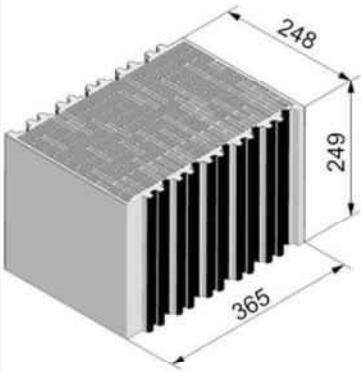

Producer		e.g. Wienerberger		
Nominal dimensions	[mm]	length L	width W	height H
		248	365	249
Mean gross dry density ρ	[kg/dm³]	0,7		
Mean compressive strength / Min. compressive strength single brick [1]	[N/mm²]	10 / 8 or 12,5 / 10 or 15 / 12		
Standard or annex		EN 771-1:2011+A1:2015		

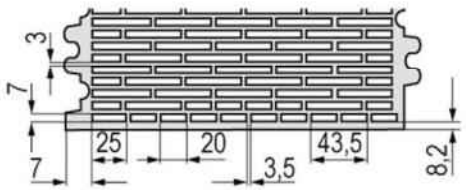

Dimension see also Annex B16

Table C36.1: Installation parameters
(Pre-positioned installation with perforated sleeve UPM SH K)

Anchor rod	M6	M8	M6	M8	-	M8	M10	M8	M10	-	M12	M16	M12	M16	M12	M16
Internal threaded anchor UPM-I	-		-		M6 M8 **11x85**	-		-		M10 M12 **15x85**	-		-		-	
Perforated sleeve UPM SH K	**12x50**		**12x85**		**16x85**			**16x130**		**20x85**			**20x130**		**20x200**	
Anchor rod and internal threaded anchor UPM-I with perforated sleeve UPM SH K																
Max. installation torque	$\max T_{inst}$	[Nm]	3				5	3		5						
General installation parameters																
Edge distance	$c_{min} = c_{cr}$	[mm]	60													
Spacing	s_{min} ∥		80													
	s_{cr} ∥		250													
	s_{min} ⊥		80													
	s_{cr} ⊥		250													
Drilling method																
Rotary drilling with carbide drill																

[1] The minimum compressive strength of the single brick must not be less than 80% of the mean compressive strength.

Table C36.2: Group factors

Anchor rod	M6	M8	M6	M8	-	M8	M10	M8	M10	-	M12	M16	M12	M16	M12	M16
Internal threaded anchor UPM-I	-		-		M6 M8 **11x85**	-		-		M10 M12 **15x85**	-		-		-	
Perforated sleeve UPM SH K	**12x50**		**12x85**		**16x85**			**16x130**		**20x85**			**20x130**		**20x200**	
Group factors $\alpha_{g,N}$ (s_{min} ∥)	[-]	1,7														
Group factors $\alpha_{g,V}$ (s_{min} ∥)		0,5														
Group factors $\alpha_{g,N}$ (s_{min} ⊥)		1,3														
Group factors $\alpha_{g,V}$ (s_{min} ⊥)		0,5														

Upat injection system UPM 44 for masonry

Performance
Vertical perforated brick HLz, T10, T11, dimensions, installation parameters, Group factors

Annex C36
Appendix 65 / 153

Vertical perforated brick HLz, T10, T11, EN 771-1:2011+A1:2015

Table C37.1: Installation parameters
(Push through installation with perforated sleeve UPM SH K)

Anchor rod			**M10**	**M12**	**M16**
Perforated sleeve UPM SH K			**18x130/200**		**22x130/200**
Anchor rod with perforated sleeve UPM SH K					
Max. installation torque	max T_{inst}	[Nm]	5		
General installation parameters					
Edge distance	$c_{min} = c_{cr}$	[mm]	60		
Spacing	s_{min} ∥		80		
	s_{cr} ∥		250		
	s_{min} ⊥		80		
	s_{cr} ⊥		250		
Drilling method					
Rotary drilling with carbide drill					

Table C37.2: Group factors

Anchor rod			**M10**	**M12**	**M16**
Perforated sleeve UPM SH K			**18x130/200**		**22x130/200**
Group factors	$\alpha_{g,N}$ (s_{min} ∥)	[-]	1,7		
	$\alpha_{g,V}$ (s_{min} ∥)		0,5		
	$\alpha_{g,N}$ (s_{min} ⊥)		1,3		
	$\alpha_{g,V}$ (s_{min} ⊥)		0,5		

Vertical perforated brick HLz, T10, T11, EN 771-1:2011+A1:2015

Table C38.1: Characteristic resistance to pull-out failure or brick breakout failure of a single anchor under tension loading (Pre-positioned installation)

Anchor rod	M6 M8	M6 M8	-	M8 M10	M8 M10	-	M12 M16	M12 M16	M12 M16
Internal threaded anchor UPM-I	-	-	M6 M8 / 11x85	-	-	M10 M12 / 15x85	-	-	-
Perforated sleeve UPM SH K	12x50	12x85	16x85		16x130	20x85		20x130	20x200

$N_{Rk} = N_{Rk,p} = N_{Rk,b} = N_{Rk,p,c} = N_{Rk,b,c}$ [kN]; temperature range 50/80°C [2)]				
Mean compressive strength / Min. compressive strength single brick [1)]	Use conditions			
10 / 8 N/mm²	w/w w/d	1,5	1,5	
	d/d	1,5	2,0	
12,5 / 10 N/mm²	w/w w/d	1,5	2,0	
	d/d	2,0	2,0	
15 / 12 N/mm²	w/w w/d	2,0	2,0	
	d/d	2,0	2,5	

[1)] The minimum compressive strength of the single brick must not be less than 80% of the mean compressive strength.
[2)] For temperature range 72/120°C: $N_{Rk\,(72/120°C)} = 0{,}83 \cdot N_{Rk\,(50/80°C)}$.

Table C38.2: Characteristic resistance to pull-out failure or brick breakout failure of a single anchor under tension loading (Push through installation)

Anchor rod	**M10**	**M12**	**M16**
Perforated sleeve UPM SH K	**18x130/200**		**22x130/200**

$N_{Rk} = N_{Rk,p} = N_{Rk,b} = N_{Rk,p,c} = N_{Rk,b,c}$ [kN]; temperature range 50/80°C [2)]				
Mean compressive strength / Min. compressive strength single brick [1)]	Use conditions			
10 / 8 N/mm²	w/w w/d	1,5		1,5
	d/d	2,0		2,0
12,5 / 10 N/mm²	w/w w/d	2,0		2,0
	d/d	2,0		2,0
15 / 12 N/mm²	w/w w/d	2,0		2,0
	d/d	2,5		2,5

[1)] The minimum compressive strength of the single brick must not be less than 80% of the mean compressive strength.
[2)] For temperature range 72/120°C: $N_{Rk\,(72/120°C)} = 0{,}83 \cdot N_{Rk\,(50/80°C)}$.

Factor for job site tests and displacements see annex C123.

Vertical perforated brick HLz, T10, T11, EN 771-1:2011+A1:2015

Table C39.1: Characteristic resistance to local brick failure or brick edge failure of a single anchor under shear loading (Pre-positioned installation)

Anchor rod	M6	M8	M6	M8	-		M8	M10	M8	M10	-		M12	M16	M12	M16	M12	M16
Internal threaded anchor UPM-I	-		-		M6	M8	-		-		M10	M12	-		-		-	
					11x85						15x85							
Perforated sleeve UPM SH K	12x50		12x85		16x85				16x130		20x85				20x130		20x200	

$V_{Rk} = V_{Rk,b} = V_{Rk,c,II} = V_{Rk,c,\perp}$ [kN]; temperature range 50/80°C and 72/120°C				
Mean compressive strength / Min. compressive strength single brick [1]	Use conditions			
10 / 8 N/mm²	w/w, w/d, d/d	0,9	1,5	2,0
12,5 / 10 N/mm²	w/w, w/d, d/d	0,9	1,5	2,0
15 / 12 N/mm²	w/w, w/d, d/d	1,2	2,0	2,0

[1] The minimum compressive strength of the single brick must not be less than 80% of the mean compressive strength.

Table C39.2: Characteristic resistance to local brick failure or brick edge failure of a single anchor under shear loading (Push through installation)

Anchor rod	**M10**	**M12**	**M16**
Perforated sleeve UPM SH K	**18x130/200**		**22x130/200**

$V_{Rk} = V_{Rk,b} = V_{Rk,c,II} = V_{Rk,c,\perp}$ [kN]; temperature range 50/80°C and 72/120°C				
Mean compressive strength / Min. compressive strength single brick [1]	Use conditions			
10 / 8 N/mm²	w/w, w/d, d/d	1,5		2,0
12,5 / 10 N/mm²	w/w, w/d, d/d	1,5		2,0
15 / 12 N/mm²	w/w, w/d, d/d	2,0		2,0

[1] The minimum compressive strength of the single brick must not be less than 80% of the mean compressive strength.

Factor for job site tests and displacements see annex C123.

Vertical perforated brick HLz, T7 PF, filled with perlit, EN 771-1:2011+A1:2015

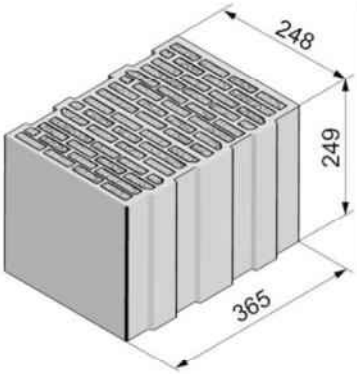

Producer		e.g. Wienerberger		
Nominal dimensions	[mm]	length L	width W	height H
		248	365	249
Mean gross dry density ρ	[kg/dm³]	0,5		
Mean compressive strength / Min. compressive strength single brick [1)]	[N/mm²]	5 / 4 or 8 / 6		
Standard or annex		EN 771-1:2011+A1:2015		

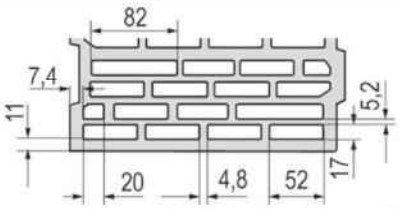

Dimension see also Annex B16

Table C40.1: Installation parameters
(Pre-positioned installation with perforated sleeve UPM SH K)

Anchor rod	M6	M8	M6	M8	-		M8	M10	M8	M10	-		M12	M16	M12	M16	M12	M16
Internal threaded anchor UPM-I	-		-		M6	M8	-		-		M10	M12	-		-		-	
					11x85						15x85							
Perforated sleeve UPM SH K	12x50		12x85		16x85				16x130		20x85				20x130		20x200	

Anchor rod and internal threaded anchor UPM-I with perforated sleeve UPM SH K							
Max. installation torque	max T_{inst}	[Nm]	2		5	2	5

General installation parameters			
Edge distance	$c_{min} = c_{cr}$	[mm]	60
Spacing	s_{min} ∥		80
	s_{cr} ∥		250
	s_{min} ⊥		80
	s_{cr} ⊥		250

Drilling method
Rotary drilling with carbide drill

[1)] The minimum compressive strength of the single brick must not be less than 80% of the mean compressive strength.

Table C40.2: Group factors

Anchor rod	M6	M8	M6	M8	-		M8	M10	M8	M10	-		M12	M16	M12	M16	M12	M16
Internal threaded anchor UPM-I	-		-		M6	M8	-		-		M10	M12	-		-		-	
					11x85						15x85							
Perforated sleeve UPM SH K	12x50		12x85		16x85				16x130		20x85				20x130		20x200	

Group factors	$\alpha_{g,N}$ (s_{min} ∥)	[-]	1,1
	$\alpha_{g,V}$ (s_{min} ∥)		1,2
	$\alpha_{g,N}$ (s_{min} ⊥)		1,1
	$\alpha_{g,V}$ (s_{min} ⊥)		1,2

Upat injection system UPM 44 for masonry

Performance
Vertical perforated brick HLz, T7 PF, filled with perlite, dimensions, installation parameters, Group factors

Annex C40
Appendix 69 / 153

Vertical perforated brick HLz, T7 PF, filled with perlite, EN 771-1:2011+A1:2015

Table C41.1: Installation parameters
(Push through installation with perforated sleeve UPM SH K)

Anchor rod			**M10**	**M12**	**M16**
Perforated sleeve UPM SH K			**18x130/200**		**22x130/200**
Anchor rod with perforated sleeve UPM SH K					
Max. installation torque	max T_{inst}	[Nm]	5		
General installation parameters					
Edge distance	$c_{min} = c_{cr}$	[mm]	60		
Spacing	s_{min} II		80		
	s_{cr} II		250		
	s_{min} ⊥		80		
	s_{cr} ⊥		250		
Drilling method					
Rotary drilling with carbide drill					

Table C41.2: Group factors

Anchor rod			**M10**	**M12**	**M16**
Perforated sleeve UPM SH K			**18x130/200**		**22x130/200**
Group factors	$\alpha_{g,N}$ (s_{min} II)	[-]	1,1		
	$\alpha_{g,V}$ (s_{min} II)		1,2		
	$\alpha_{g,N}$ (s_{min} ⊥)		1,1		
	$\alpha_{g,V}$ (s_{min} ⊥)		1,2		

Vertical perforated brick HLz, T7 PF, filled with perlite, EN 771-1:2011+A1:2015

Table C42.1: Characteristic resistance to pull-out failure or brick breakout failure of a single anchor under tension loading (Pre-positioned installation)

Anchor rod		M6 M8	M6 M8	-	M8 M10	M8 M10	-	M12 M16	M12 M16	M12 M16
Internal threaded anchor UPM-I		-	-	M6 M8 11x85	-	-	M10 M12 15x85	-	-	-
Perforated sleeve UPM SH K		12x50	12x85	16x85		16x130	20x85		20x130	20x200
$N_{Rk} = N_{Rk,p} = N_{Rk,b} = N_{Rk,p,c} = N_{Rk,b,c}$ [kN]; temperature range 50/80°C [2)]										
Mean compressive strength / Min. compressive strength single brick [1)]	Use conditions									
5 / 4 N/mm²	w/w w/d	1,2				1,2	1,2		1,2	2,0
	d/d	1,5				1,5	1,5		1,5	2,0
8 / 6 N/mm²	w/w w/d	1,5				1,5	1,5		1,5	2,5
	d/d	1,5				2,0	1,5		2,0	3,0

[1)] The minimum compressive strength of the single brick must not be less than 80% of the mean compressive strength.

[2)] For temperature range 72/120°C: $N_{Rk\,(72/120°C)} = 0{,}83 \cdot N_{Rk\,(50/80°C)}$.

Table C42.2: Characteristic resistance to pull-out failure or brick breakout failure of a single anchor under tension loading (Push through installation)

Anchor rod		**M10**	**M12**	**M16**
Perforated sleeve UPM SH K		**18x130/200**		**22x130/200**
$N_{Rk} = N_{Rk,p} = N_{Rk,b} = N_{Rk,p,c} = N_{Rk,b,c}$ [kN]; temperature range 50/80°C [2)]				
Mean compressive strength / Min. compressive strength single brick [1)]	Use conditions			
5 / 4 N/mm²	w/w w/d	1,2		1,2
	d/d	1,5		1,5
8 / 6 N/mm²	w/w w/d	1,5		1,5
	d/d	2,0		2,0

[1)] The minimum compressive strength of the single brick must not be less than 80% of the mean compressive strength.

[2)] For temperature range 72/120°C: $N_{Rk\,(72/120°C)} = 0{,}83 \cdot N_{Rk\,(50/80°C)}$.

Factor for job site tests and displacements see annex C123.

Vertical perforated brick HLz, T7 PF, filled with perlite, EN 771-1:2011+A1:2015

Table C43.1: Characteristic resistance to local brick failure or brick edge failure of a single anchor under shear loading (Pre-positioned installation)

Anchor rod		**M6**	**M8**	**M6**	**M8**	**-**		**M8**	**M10**	**M8**	**M10**	**-**		**M12**	**M16**	**M12**	**M16**	**M12**	**M16**
Internal threaded anchor UPM-I		-		-		**M6**	**M8**	-		-		**M10**	**M12**	-		-		-	
						11x85						**15x85**							
Perforated sleeve UPM SH K		**12x50**		**12x85**		**16x85**				**16x130**		**20x85**				**20x130**		**20x200**	
$V_{Rk} = V_{Rk,b} = V_{Rk,c,II} = V_{Rk,c,\perp}$ **[kN]; temperature range 50/80°C and 72/120°C**																			
Mean compressive strength / Min. compressive strength single brick [1]	Use conditions																		
5 / 4 N/mm²	w/w w/d d/d	0,9		1,5								1,2							
8 / 6 N/mm²	w/w w/d d/d	1,2		2,0								1,5							

[1] The minimum compressive strength of the single brick must not be less than 80% of the mean compressive strength.

Table C43.2: Characteristic resistance to local brick failure or brick edge failure of a single anchor under shear loading (Push through installation)

Anchor rod		**M10**	**M12**	**M16**
Perforated sleeve UPM SH K		**18x130/200**		**22x130/200**
$V_{Rk} = V_{Rk,b} = V_{Rk,c,II} = V_{Rk,c,\perp}$ **[kN]; temperature range 50/80°C and 72/120°C**				
Mean compressive strength / Min. compressive strength single brick [1]	Use conditions			
5 / 4 N/mm²	w/w w/d d/d	1,5		1,2
8 / 6 N/mm²	w/w w/d d/d	2,0		1,5

[1] The minimum compressive strength of the single brick must not be less than 80% of the mean compressive strength.

Factor for job site tests and displacements see annex C123.

Vertical perforated brick HLz, T9 MW, filled with mineral wool, EN 771-1:2011+A1:2015

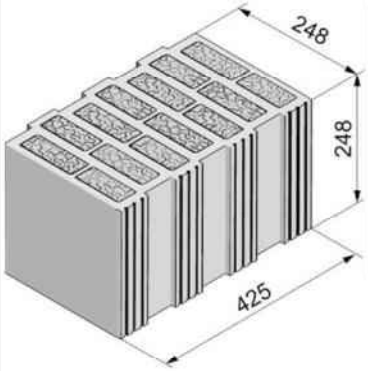

Producer		e.g. Wienerberger		
Nominal dimensions	[mm]	length L	width W	height H
		248	425	248
Mean gross dry density ρ	[kg/dm³]	0,8		
Mean compressive strength / Min. compressive strength single brick [1)]	[N/mm²]	5 / 4 or 8 / 6 or 10 / 8		
Standard or annex		EN 771-1:2011+A1:2015		

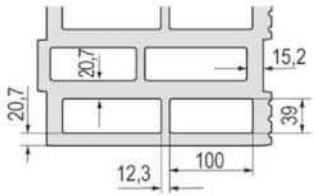

Dimension see also Annex B16

Table C44.1: Installation parameters
(Pre-positioned installation with perforated sleeve UPM SH K)

Anchor rod	M6	M8	M6	M8	-		M8	M10	M8	M10	-		M12	M16	M12	M16	M12	M16
Internal threaded anchor UPM-I	-		-		M6	M8	-		-		M10	M12	-		-		-	
					11x85						15x85							
Perforated sleeve UPM SH K	12x50		12x85		16x85				16x130		20x85				20x130		20x200	
Anchor rod and internal threaded anchor UPM-I with perforated sleeve UPM SH K																		
Max. installation torque $\max T_{inst}$	[Nm]	3						5	3	5								
General installation parameters																		
Edge distance $c_{min} = c_{cr}$	[mm]	60																
Spacing s_{min} II	[mm]	80																
Spacing s_{cr} II	[mm]	250																
Spacing s_{min} ⊥	[mm]	80																
Spacing s_{cr} ⊥	[mm]	250																
Drilling method																		
Rotary drilling with carbide drill																		

[1)] The minimum compressive strength of the single brick must not be less than 80% of the mean compressive strength.

Table C44.2: Group factors

Anchor rod	M6	M8	M6	M8	-		M8	M10	M8	M10	-		M12	M16	M12	M16	M12	M16
Internal threaded anchor UPM-I	-		-		M6	M8	-		-		M10	M12	-		-		-	
					11x85						15x85							
Perforated sleeve UPM SH K	12x50		12x85		16x85				16x130		20x85				20x130		20x200	
Group factors $\alpha_{g,N}$ (s_{min} II)	[-]	1,3																
Group factors $\alpha_{g,V}$ (s_{min} II)	[-]	1,2																
Group factors $\alpha_{g,N}$ (s_{min} ⊥)	[-]	0,6																
Group factors $\alpha_{g,V}$ (s_{min} ⊥)	[-]	1,2																

Upat injection system UPM 44 for masonry

Performance
Vertical perforated brick HLz, T9 MW, filled with mineral wool, dimensions, installation parameters, Group factors

Annex C44
Appendix 73 / 153

Vertical perforated brick HLz, T9 MW, filled with mineral wool, EN 771-1:2011+A1:2015

Table C45.1: Installation parameters
(Push through installation with perforated sleeve UPM SH K)

Anchor rod			**M10**	**M12**	**M16**
Perforated sleeve UPM SH K			**18x130/200**		**22x130/200**
Anchor rod with perforated sleeve UPM SH K					
Max. installation torque	max T_{inst}	[Nm]	5		
General installation parameters					
Edge distance	$c_{min} = c_{cr}$	[mm]	60		
Spacing	s_{min} II		80		
	s_{cr} II		250		
	s_{min} ⊥		80		
	s_{cr} ⊥		250		
Drilling method					
Rotary drilling with carbide drill					

Table C45.2: Group factors

Anchor rod			**M10**	**M12**	**M16**
Perforated sleeve UPM SH K			**18x130/200**		**22x130/200**
Group factors	$\alpha_{g,N}$ (s_{min} II)	[-]	1,3		
	$\alpha_{g,V}$ (s_{min} II)		1,2		
	$\alpha_{g,N}$ (s_{min} ⊥)		0,6		
	$\alpha_{g,V}$ (s_{min} ⊥)		1,2		

Vertical perforated brick HLz, T9 MW, filled with mineral wool, EN 771-1:2011+A1:2015

Table C46.1: Characteristic resistance to pull-out failure or brick breakout failure of a single anchor under tension loading (Pre-positioned installation)

Anchor rod		M6	M8	M6	M8	-		M8	M10	M8	M10	-		M12	M16	M12	M16	M12	M16
Internal threaded anchor UPM-I		-		-		M6	M8	-		-		M10	M12	-		-		-	
						11x85						15x85							
Perforated sleeve UPM SH K		12x50		12x85		16x85				16x130		20x85				20x130		20x200	
$N_{Rk} = N_{Rk,p} = N_{Rk,b} = N_{Rk,p,c} = N_{Rk,b,c}$ [kN]; temperature range 50/80°C [2)]																			
Mean compressive strength / Min. compressive strength single brick [1)]	Use conditions																		
5 / 4 N/mm²	w/w w/d	1,5				2,0				3,0		2,5				4,0			
	d/d	2,0				2,5				3,0		2,5				4,5			
8 / 6 N/mm²	w/w w/d	2,0				2,5				3,5		3,0				5,0			
	d/d	2,0				3,0				4,0		3,0				5,5			
10 / 8 N/mm²	w/w w/d	2,5				3,0				4,0		3,5				6,0			
	d/d	2,5				3,0				4,5		3,5				6,5			

[1)] The minimum compressive strength of the single brick must not be less than 80% of the mean compressive strength.
[2)] For temperature range 72/120°C: $N_{Rk\,(72/120°C)} = 0{,}83 \cdot N_{Rk\,(50/80°C)}$.

Table C46.2: Characteristic resistance to pull-out failure or brick breakout failure of a single anchor under tension loading (Push through installation)

Anchor rod		**M10**		**M12**		**M16**	
Perforated sleeve UPM SH K		**18x130/200**				**22x130/200**	
$N_{Rk} = N_{Rk,p} = N_{Rk,b} = N_{Rk,p,c} = N_{Rk,b,c}$ [kN]; temperature range 50/80°C [2)]							
Mean compressive strength / Min. compressive strength single brick [1)]	Use conditions						
5 / 4 N/mm²	w/w w/d	3,0				4,0	
	d/d	3,0				4,5	
8 / 6 N/mm²	w/w w/d	3,5				5,0	
	d/d	4,0				5,5	
10 / 8 N/mm²	w/w w/d	4,0				6,0	
	d/d	4,5				6,5	

[1)] The minimum compressive strength of the single brick must not be less than 80% of the mean compressive strength.
[2)] For temperature range 72/120°C: $N_{Rk\,(72/120°C)} = 0{,}83 \cdot N_{Rk\,(50/80°C)}$.

Factor for job site tests and displacements see annex C123.

Vertical perforated brick HLz, T9 MW, filled with mineral wool, EN 771-1:2011+A1:2015

Table C47.1: Characteristic resistance to local brick failure or brick edge failure of a single anchor under shear loading (Pre-positioned installation)

Anchor rod	M6	M8	M6	M8	-		M8	M10	M8	M10	-		M12	M16	M12	M16	M12	M16
Internal threaded anchor UPM-I	-		-		M6	M8	-		-		M10	M12	-		-		-	
					11x85						15x85							
Perforated sleeve UPM SH K	12x50		12x85		16x85				16x130		20x85				20x130		20x200	

$V_{Rk} = V_{Rk,b} = V_{Rk,c,II} = V_{Rk,c,\perp}$ [kN]; temperature range 50/80°C and 72/120°C														
Mean compressive strength / Min. compressive strength single brick [1]	Use conditions													
5 / 4 N/mm²	w/w	w/d	2,0		2,0				2,5		2,0			1,5
	d/d													
8 / 6 N/mm²	w/w	w/d	2,5		2,5				3,0		2,5			2,0
	d/d													
10 / 8 N/mm²	w/w	w/d	2,5		3,0				4,0		3,0			2,5
	d/d													

[1] The minimum compressive strength of the single brick must not be less than 80% of the mean compressive strength.

Table C47.2: Characteristic resistance to local brick failure or brick edge failure of a single anchor under shear loading (Push through installation)

Anchor rod	**M10**	**M12**	**M16**
Perforated sleeve UPM SH K	**18x130/200**		**22x130/200**

$V_{Rk} = V_{Rk,b} = V_{Rk,c,II} = V_{Rk,c,\perp}$ [kN]; temperature range 50/80°C and 72/120°C				
Mean compressive strength / Min. compressive strength single brick [1]	Use conditions			
5 / 4 N/mm²	w/w	w/d	2,5	2,0
	d/d			
8 / 6 N/mm²	w/w	w/d	3,0	2,5
	d/d			
10 / 8 N/mm²	w/w	w/d	4,0	3,0
	d/d			

[1] The minimum compressive strength of the single brick must not be less than 80% of the mean compressive strength.

Factor for job site tests and displacements see annex C123.

Vertical perforated brick HLz, FZ 7, filled with mineral wool, EN 771-1:2011+A1:2015

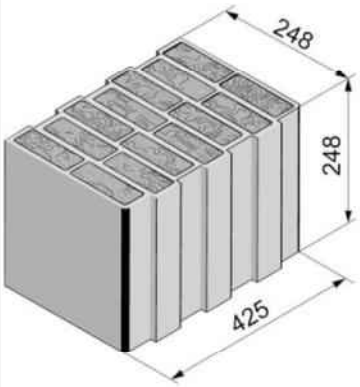

Producer		e.g. Wienerberger		
Nominal dimensions	[mm]	length L	width W	height H
		248	425	248
Mean gross dry density ρ	[kg/dm³]	0,8		
Mean compressive strength / Min. compressive strength single brick [1)]	[N/mm²]	5 / 4 or 7,5 / 6 or 10 / 8		
Standard or annex		EN 771-1:2011+A1:2015		

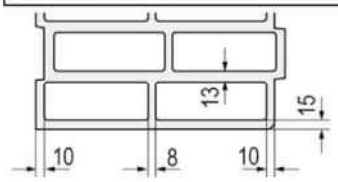

Dimension see also Annex B16

Table C48.1: Installation parameters
(Pre-positioned installation with perforated sleeve UPM SH K)

Anchor rod	M6	M8	M6	M8	-	M8	M10	M8	M10	-	M12	M16	M12	M16	M12	M16
Internal threaded anchor UPM-I	-		-		M6 M8 11x85	-		-		M10 M12 15x85	-		-		-	
Perforated sleeve UPM SH K	12x50		12x85		16x85			16x130		20x85			20x130		20x200	

Anchor rod and internal threaded anchor UPM-I with perforated sleeve UPM SH K							
Max. installation torque	max T_{inst}	[Nm]	2	5	2	5	

General installation parameters			
Edge distance	$c_{min} = c_{cr}$	[mm]	60
Spacing	s_{min} ∥		80
	s_{cr} ∥		250
	s_{min} ⊥		80
	s_{cr} ⊥		250

Drilling method

Rotary drilling with carbide drill

[1)] The minimum compressive strength of the single brick must not be less than 80% of the mean compressive strength.

Table C48.2: Group factors

Anchor rod	M6	M8	M6	M8	-	M8	M10	M8	M10	-	M12	M16	M12	M16	M12	M16
Internal threaded anchor UPM-I	-		-		M6 M8 11x85	-		-		M10 M12 15x85	-		-		-	
Perforated sleeve UPM SH K	12x50		12x85		16x85			16x130		20x85			20x130		20x200	

Group factors	$\alpha_{g,N}$ (s_{min} ∥)	[-]	1,9
	$\alpha_{g,V}$ (s_{min} ∥)		0,9
	$\alpha_{g,N}$ (s_{min} ⊥)		1,0
	$\alpha_{g,V}$ (s_{min} ⊥)		0,7

Upat injection system UPM 44 for masonry

Performance
Vertical perforated brick HLz, FZ 7, filled with mineral wool;
dimensions, installation parameters, Group factors

Annex C48
Appendix 77 / 153

Vertical perforated brick HLz, FZ 7, filled with mineral wool, EN 771-1:2011+A1:2015

Table C49.1: Installation parameters
(Push through installation with perforated sleeve UPM SH K)

Anchor rod			**M10**	**M12**	**M16**
Perforated sleeve UPM SH K			**18x130/200**		**22x130/200**
Anchor rod with perforated sleeve UPM SH K					
Max. installation torque	T_{inst}	[Nm]	5		
General installation parameters					
Edge distance	$c_{min} = c_{cr}$	[mm]	60		
Spacing	s_{min} ∥	[mm]	80		
	s_{cr} ∥	[mm]	250		
	s_{min} ⊥	[mm]	80		
	s_{cr} ⊥	[mm]	250		
Drilling method					
Rotary drilling with carbide drill					

Table C49.2: Group factors

Anchor rod			**M10**	**M12**	**M16**
Perforated sleeve UPM SH K			**18x130/200**		**22x130/200**
Group factors	$\alpha_{g,N}$ (s_{min} ∥)	[-]	1,9		
	$\alpha_{g,V}$ (s_{min} ∥)	[-]	0,9		
	$\alpha_{g,N}$ (s_{min} ⊥)	[-]	1,0		
	$\alpha_{g,V}$ (s_{min} ⊥)	[-]	0,7		

Vertical perforated brick HLz, FZ 7, filled with mineral wool, EN 771-1:2011+A1:2015

Table C50.1: Characteristic resistance to pull-out failure or brick breakout failure of a single anchor under tension loading (Pre-positioned installation)

Anchor rod		M6	M8	M6	M8	-	M8	M10	M8	M10	-	M12	M16	M12	M16	M12	M16
Internal threaded anchor UPM-I		-		-		M6 M8 11x85	-		-		M10 M12 15x85	-		-		-	
Perforated sleeve UPM SH K		12x50		12x85		16x85			16x130		20x85			20x130		20x200	
$N_{Rk} = N_{Rk,p} = N_{Rk,b} = N_{Rk,p,c} = N_{Rk,b,c}$ [kN]; temperature range 50/80°C [2)]																	
Mean compressive strength / Min. compressive strength single brick [1)]	Use conditions																
5 / 4 N/mm²	w/w w/d	0,60		0,75		1,50			2,00		1,20			2,00		2,00	
	d/d	0,60		0,90		1,50			2,00		1,50			2,00		2,50	
7,5 / 6 N/mm²	w/w w/d	0,75		0,90		1,50			2,00		1,50			2,50		2,50	
	d/d	0,90		0,90		2,00			2,50		2,00			2,50		3,00	
10 / 8 N/mm²	w/w w/d	0,90		1,20		2,00			2,50		2,00			2,50		3,00	
	d/d	0,90		1,20		2,00			3,00		2,00			3,00		3,50	

[1)] The minimum compressive strength of the single brick must not be less than 80% of the mean compressive strength.
[2)] For temperature range 72/120°C: $N_{Rk\,(72/120°C)} = 0{,}83 \cdot N_{Rk\,(50/80°C)}$.

Table C50.2: Characteristic resistance to pull-out failure or brick breakout failure of a single anchor under tension loading (Push through installation)

Anchor rod		**M10**	**M12**	**M16**
Perforated sleeve UPM SH K		**18x130/200**		**22x130/200**
$N_{Rk} = N_{Rk,p} = N_{Rk,b} = N_{Rk,p,c} = N_{Rk,b,c}$ [kN]; temperature range 50/80°C [2)]				
Mean compressive strength / Min. compressive strength single brick [1)]	Use conditions			
5 / 4 N/mm²	w/w w/d	2,0		2,0
	d/d	2,0		2,0
7,5 / 6 N/mm²	w/w w/d	2,0		2,5
	d/d	2,5		2,5
10 / 8 N/mm²	w/w w/d	2,5		2,5
	d/d	3,0		3,0

[1)] The minimum compressive strength of the single brick must not be less than 80% of the mean compressive strength.
[2)] For temperature range 72/120°C: $N_{Rk\,(72/120°C)} = 0{,}83 \cdot N_{Rk\,(50/80°C)}$.

Factor for job site tests and displacements see annex C123.

Vertical perforated brick HLz, FZ 7, filled with mineral wool, EN 771-1:2011+A1:2015

Table C51.1: Characteristic resistance to local brick failure or brick edge failure of a single anchor under shear loading (Pre-positioned installation)

Anchor rod	M6	M8	M6	M8	-		M8	M10	M8	M10	-		M12	M16	M12	M16	M12	M16
Internal threaded anchor UPM-I	-		-		M6	M8	-		-		M10	M12	-		-		-	
					11x85						15x85							
Perforated sleeve UPM SH K	12x50		12x85		16x85				16x130		20x85				20x130		20x200	

$V_{Rk} = V_{Rk,b} = V_{Rk,c,II} = V_{Rk,c,\perp}$ [kN]; temperature range 50/80°C and 72/120°C				
Mean compressive strength / Min. compressive strength single brick [1]	Use conditions			
5 / 4 N/mm²	w/w, w/d, d/d	1,2	1,5	1,5
7,5 / 6 N/mm²	w/w, w/d, d/d	1,5	2,0	1,5
10 / 8 N/mm²	w/w, w/d, d/d	1,5	2,5	2,0

[1] The minimum compressive strength of the single brick must not be less than 80% of the mean compressive strength.

Table C51.2: Characteristic resistance to local brick failure or brick edge failure of a single anchor under shear loading (Push through installation)

Anchor rod	**M10**	**M12**	**M16**
Perforated sleeve UPM SH K	**18x130/200**		**22x130/200**

$V_{Rk} = V_{Rk,b} = V_{Rk,c,II} = V_{Rk,c,\perp}$ [kN]; temperature range 50/80°C and 72/120°C		
Mean compressive strength / Min. compressive strength single brick [1]	Use conditions	
5 / 4 N/mm²	w/w, w/d, d/d	1,5
7,5 / 6 N/mm²	w/w, w/d, d/d	2,0
10 / 8 N/mm²	w/w, w/d, d/d	2,5

[1] The minimum compressive strength of the single brick must not be less than 80% of the mean compressive strength.

Factor for job site tests and displacements see annex C123.

Vertical perforated brick HLz, EN 771-1:2011+A1:2015

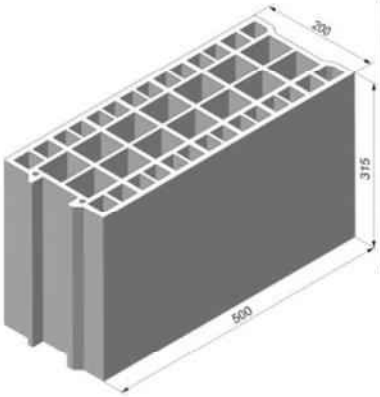

Producer		e.g. Bouyer Leroux		
Nominal dimensions	[mm]	length L	width W	height H
		500	200	315
Mean gross dry density ρ	[kg/dm³]	≥ 0,6		
Mean compressive strength / Min. compressive strength single brick 1)	[N/mm²]	5 / 4 or 7,5 / 6 or 10 / 8		
Standard or annex		EN 771-1:2011+A1:2015		

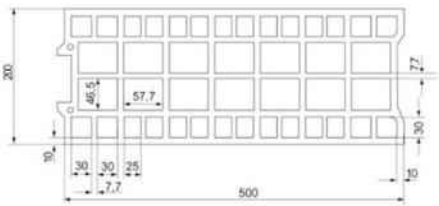

Dimension see also Annex B16

Table C52.1: Installation parameters
(Pre-positioned installation with perforated sleeve UPM SH K)

Anchor rod	**M6**	**M8**	**M6**	**M8**	**-**		**M8**	**M10**	**M8**	**M10**	**-**		**M12**	**M16**	**M12**	**M16**
Internal threaded anchor UPM-I	**-**		**-**		**M6**	**M8**	**-**		**-**		**M10**	**M12**	**-**		**-**	
					11x85						**15x85**					
Perforated sleeve UPM SH K	**12x50**		**12x85**		**16x85**				**16x130**		**20x85**				**20x130**	
Anchor rod and internal threaded anchor UPM-I with perforated sleeve UPM SH K																
Max. installation torque	$\max T_{inst}$	[Nm]	2													
General installation parameters																
Edge distance	$c_{min} = c_{cr}$	[mm]	120													
Spacing	s_{min} ∥		120													
	s_{cr} ∥		500													
	$s_{min} \perp = s_{cr} \perp$		315													
Drilling method																
Hammer drilling with hard metal hammer drill																

1) The minimum compressive strength of the single brick must not be less than 80% of the mean compressive strength.

Table C52.2: Group factors

Anchor rod	**M6**	**M8**	**M6**	**M8**	**-**		**M8**	**M10**	**M8**	**M10**	**-**		**M12**	**M16**	**M12**	**M16**
Internal threaded anchor UPM-I	**-**		**-**		**M6**	**M8**	**-**		**-**		**M10**	**M12**	**-**		**-**	
					11x85						**15x85**					
Perforated sleeve UPM SH K	**12x50**		**12x85**		**16x85**				**16x130**		**20x85**				**20x130**	
Group factors	$\alpha_{g,N}$ (s_{min} ∥)	[-]	1,3													
	$\alpha_{g,V}$ (s_{min} ∥)		1,7													
	$\alpha_{g,N}$ ($s_{min} \perp$)		2,0													
	$\alpha_{g,V}$ ($s_{min} \perp$)															

Upat injection system UPM 44 for masonry

Performance
Vertical perforated brick HLz, dimensions, installation parameters, Group factors

Annex C52
Appendix 81 / 153

Vertical perforated brick HLz, EN 771-1:2011+A1:2015

Table C53.1: Installation parameters
(Push through installation with perforated sleeve UPM SH K)

Anchor rod			**M10**	**M12**	**M16**
Perforated sleeve UPM SH K			**18x130/200**		**22x130/200**
Anchor rod with perforated sleeve UPM SH K					
Max. installation torque	$\max T_{inst}$	[Nm]	2		
General installation parameters					
Edge distance	$c_{min} = c_{cr}$	[mm]	120		
Spacing	s_{min} II	[mm]	120		
	s_{cr} II	[mm]	500		
	$s_{min} \perp = s_{cr} \perp$	[mm]	315		
Drilling method					
Hammer drilling with hard metal hammer drill					

Table C53.2: Group factors

Anchor rod			**M10**	**M12**	**M16**
Perforated sleeve UPM SH K			**18x130/200**		**22x130/200**
Group factors	$\alpha_{g,N}$ (s_{min} II)	[-]	1,3		
	$\alpha_{g,V}$ (s_{min} II)	[-]	1,7		
	$\alpha_{g,N}$ ($s_{min} \perp$)	[-]	2,0		
	$\alpha_{g,V}$ ($s_{min} \perp$)	[-]			

Vertical perforated brick HLz, EN 771-1:2011+A1:2015

Table C54.1: Characteristic resistance to pull-out failure or brick breakout failure of a single anchor under tension loading (Pre-positioned installation)

Anchor rod		**M6**	**M8**	**M6**	**M8**	**-**	**M8**	**M10**	**M8**	**M10**	**-**	**M12**	**M16**	**M12**	**M16**
Internal threaded anchor UPM-I		-		-		**M6** / **11x85**	-		-		**M10** / **15x85**	-		-	
Perforated sleeve UPM SH K		**12x50**		**12x85**		**16x85**			**16x130**		**20x85**			**20x130**	
$N_{Rk} = N_{Rk,p} = N_{Rk,b} = N_{Rk,p,c} = N_{Rk,b,c}$ [kN]; temperature range 50/80°C [2)]															
Mean compressive strength / Min. compressive strength single brick [1)]	Use conditions														
5 / 4 N/mm²	w/w w/d	0,50		1,50					0,75		1,50			1,50	
	d/d	0,60		1,50					0,90		1,50			2,00	
7,5 / 6 N/mm²	w/w w/d	0,75		2,00					1,20		2,00			2,50	
	d/d	0,90		2,50					1,20		2,50			2,50	
10 / 8 N/mm²	w/w w/d	0,90		3,00					1,50		3,00			3,50	
	d/d	1,20		3,00					2,00		3,00			3,50	

[1)] The minimum compressive strength of the single brick must not be less than 80% of the mean compressive strength.

[2)] For temperature range 72/120°C: $N_{Rk\,(72/120°C)} = 0{,}83 \cdot N_{Rk\,(50/80°C)}$.

Table C54.2: Characteristic resistance to pull-out failure or brick breakout failure of a single anchor under tension loading (Push through installation)

Anchor rod		**M10**	**M12**	**M16**
Perforated sleeve UPM SH K		**18x130/200**		**22x130/200**
$N_{Rk} = N_{Rk,p} = N_{Rk,b} = N_{Rk,p,c} = N_{Rk,b,c}$ [kN]; temperature range 50/80°C [2)]				
Mean compressive strength / Min. compressive strength single brick [1)]	Use conditions			
5 / 4 N/mm²	w/w w/d	0,75		1,50
	d/d	0,90		2,00
7,5 / 6 N/mm²	w/w w/d	1,20		2,50
	d/d	1,20		2,50
10 / 8 N/mm²	w/w w/d	1,50		3,50
	d/d	2,00		3,50

[1)] The minimum compressive strength of the single brick must not be less than 80% of the mean compressive strength.

[2)] For temperature range 72/120°C: $N_{Rk\,(72/120°C)} = 0{,}83 \cdot N_{Rk\,(50/80°C)}$.

Factor for job site tests and displacements see annex C123.

Vertical perforated brick HLz, EN 771-1:2011+A1:2015

Table C55.1: Characteristic resistance to local brick failure or brick edge failure of a single anchor under shear loading (Pre-positioned installation)

Anchor rod		**M6**	**M8**	**M6**	**M8**	**-**	**M8**	**M10**	**M8**	**M10**	**-**	**M12**	**M16**	**M12**	**M16**
Internal threaded anchor UPM-I		**-**		**-**		**M6** / **11x85**	**M8** / **11x85**	**-**	**-**		**M10** / **15x85**	**M12** / **15x85**	**-**		**-**
Perforated sleeve UPM SH K		**12x50**		**12x85**		**16x85**			**16x130**		**20x85**				**20x130**
$V_{Rk} = V_{Rk,b} = V_{Rk,c,II} = V_{Rk,c,\perp}$ **[kN]; temperature range 50/80°C and 72/120°C**															
Mean compressive strength / Min. compressive strength single brick [1]	Use conditions														
5 / 4 N/mm²	w/w, w/d, d/d	1,5							0,9		1,5		2,5		0,9
7,5 / 6 N/mm²	w/w, w/d, d/d	2,5							1,5		2,5		3,5		1,5
10 / 8 N/mm²	w/w, w/d, d/d	3,5							2,0		3,5		4,5		2,0

[1] The minimum compressive strength of the single brick must not be less than 80% of the mean compressive strength.

Table C55.2: Characteristic resistance to local brick failure or brick edge failure of a single anchor under shear loading (Push through installation)

Anchor rod	**M10**	**M12**	**M16**
Perforated sleeve UPM SH K	**18x130/200**		**22x130/200**
$V_{Rk} = V_{Rk,b} = V_{Rk,c,II} = V_{Rk,c,\perp}$ **[kN]; temperature range 50/80°C and 72/120°C**			
Mean compressive strength / Min. compressive strength single brick [1]	Use conditions		
5 / 4 N/mm²	w/w, w/d, d/d	0,9	
7,5 / 6 N/mm²	w/w, w/d, d/d	1,5	
10 / 8 N/mm²	w/w, w/d, d/d	2,0	

[1] The minimum compressive strength of the single brick must not be less than 80% of the mean compressive strength.

Factor for job site tests and displacements see annex C123.

Vertical perforated brick HLz, EN 771-1:2011+A1:2015

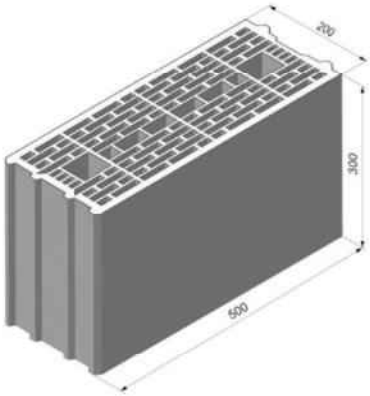

Producer		e.g. Wienerberger		
Nominal dimensions	[mm]	length L	width W	height H
		500	200	300
Mean gross dry density ρ	[kg/dm³]	≥ 0,7		
Mean compressive strength / Min. compressive strength single brick [1]	[N/mm²]	5 / 4 or 7,5 / 6 or 10 / 8 12,5 / 10		
Standard or annex		EN 771-1:2011+A1:2015		

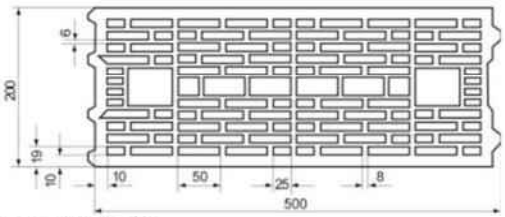

Dimension see also Annex B17

Table C56.1: Installation parameters
(Pre-positioned installation with perforated sleeve UPM SH K)

Anchor rod	**M6**	**M8**	**M6**	**M8**	**-**		**M8**	**M10**	**M8**	**M10**	**-**		**M12**	**M16**	**M12**	**M16**
Internal threaded anchor UPM-I	**-**		**-**		**M6**	**M8**	**-**		**-**		**M10**	**M12**	**-**		**-**	
					11x85						**15x85**					
Perforated sleeve UPM SH K	**12x50**		**12x85**		**16x85**				**16x130**		**20x85**				**20x130**	

Anchor rod and internal threaded anchor UPM-I with perforated sleeve UPM SH K			
Max. installation torque	max T_{inst}	[Nm]	2

General installation parameters						
Edge distance	$c_{min} = c_{cr}$	[mm]	50	80	50	80
Spacing	s_{min} ∥		100			
	s_{cr} ∥		500			
	$s_{min} \perp = s_{cr} \perp$		300			

Drilling method
Hammer drilling with hard metal hammer drill

[1] The minimum compressive strength of the single brick must not be less than 80% of the mean compressive strength.

Table C56.2: Group factors

Anchor rod	**M6**	**M8**	**M6**	**M8**	**-**		**M8**	**M10**	**M8**	**M10**	**-**		**M12**	**M16**	**M12**	**M16**
Internal threaded anchor UPM-I	**-**		**-**		**M6**	**M8**	**-**		**-**		**M10**	**M12**	**-**		**-**	
					11x85						**15x85**					
Perforated sleeve UPM SH K	**12x50**		**12x85**		**16x85**				**16x130**		**20x85**				**20x130**	

Group factors	$\alpha_{g,N}$ (s_{min} ∥)	[-]	1,4
	$\alpha_{g,V}$ (s_{min} ∥)		2
	$\alpha_{g,N}$ ($s_{min} \perp$)		
	$\alpha_{g,V}$ ($s_{min} \perp$)		

Upat injection system UPM 44 for masonry

Performance
Vertical perforated brick HLz, dimensions, installation parameters, Group factors

Annex C56
Appendix 85 / 153

Vertical perforated brick HLz, EN 771-1:2011+A1:2015

Table C57.1: Installation parameters
(Push through installation with perforated sleeve UPM SH K)

Anchor rod			**M10**	**M12**	**M16**
Perforated sleeve UPM SH K			**18x130/200**		**22x130/200**
Anchor rod with perforated sleeve UPM SH K					
Max. installation torque	$\max T_{inst}$	[Nm]	2		
General installation parameters					
Edge distance	$c_{min} = c_{cr}$	[mm]	80		
Spacing	s_{min} II		100		
	s_{cr} II		500		
	$s_{min} \perp = s_{cr} \perp$		300		
Drilling method					
Hammer drilling with hard metal hammer drill					

Table C57.2: Group factors

Anchor rod			**M10**	**M12**	**M16**
Perforated sleeve UPM SH K			**18x130/200**		**22x130/200**
Group factors	$\alpha_{g,N}$ (s_{min} II)	[-]	1,4		
	$\alpha_{g,V}$ (s_{min} II)		2		
	$\alpha_{g,N}$ ($s_{min} \perp$)				
	$\alpha_{g,V}$ ($s_{min} \perp$)				

Vertical perforated brick HLz, EN 771-1:2011+A1:2015

Table C58.1: Characteristic resistance to pull-out failure or brick breakout failure of a single anchor under tension loading (Pre-positioned installation)

Anchor rod		**M6**	**M8**	**M6**	**M8**	**-**	**M8**	**M10**	**M8**	**M10**	**-**	**M12**	**M16**	**M12**	**M16**
Internal threaded anchor UPM-I		-		-		**M6** **M8** **11x85**	-		-		**M10** **M12** **15x85**	-		-	
Perforated sleeve UPM SH K		**12x50**		**12x85**		**16x85**			**16x130**		**20x85**			**20x130**	
$N_{Rk} = N_{Rk,p} = N_{Rk,b} = N_{Rk,p,c} = N_{Rk,b,c}$ [kN]; temperature range 50/80°C [2)]															
Mean compressive strength / Min. compressive strength single brick [1)]	Use conditions														
5 / 4 N/mm²	w/w w/d	0,50				0,60			1,20		0,75			1,50	
	d/d	0,60				0,75			1,20		0,90			1,50	
7,5 / 6 N/mm²	w/w w/d	0,75				0,90			1,50		1,20			2,00	
	d/d	0,90				1,20			2,00		1,20			2,50	
10 / 8 N/mm²	w/w w/d	0,90				1,20			2,00		1,50			2,50	
	d/d	1,20				1,50			2,50		1,50			3,00	
12,5 / 10 N/mm²	w/w w/d	1,20				1,50			2,50		2,00			3,50	
	d/d	1,50				2,00			3,00		2,00			4,00	

[1)] The minimum compressive strength of the single brick must not be less than 80% of the mean compressive strength.
[2)] For temperature range 72/120°C: $N_{Rk\ (72/120°C)} = 0{,}83 \cdot N_{Rk\ (50/80°C)}$.

Table C58.2: Characteristic resistance to pull-out failure or brick breakout failure of a single anchor under tension loading (Push through installation)

Anchor rod		**M10**	**M12**	**M16**
Perforated sleeve UPM SH K		**18x130/200**		**22x130/200**
$N_{Rk} = N_{Rk,p} = N_{Rk,b} = N_{Rk,p,c} = N_{Rk,b,c}$ [kN]; temperature range 50/80°C [2)]				
Mean compressive strength / Min. compressive strength single brick [1)]	Use conditions			
5 / 4 N/mm²	w/w w/d	1,2		1,5
	d/d	1,2		1,5
7,5 / 6 N/mm²	w/w w/d	1,5		2,0
	d/d	2,0		2,5
10 / 8 N/mm²	w/w w/d	2,0		2,5
	d/d	2,5		3,0
12,5 / 10 N/mm²	w/w w/d	2,5		3,5
	d/d	3,0		4,0

[1)] The minimum compressive strength of the single brick must not be less than 80% of the mean compressive strength.
[2)] For temperature range 72/120°C: $N_{Rk\ (72/120°C)} = 0{,}83 \cdot N_{Rk\ (50/80°C)}$.

Factor for job site tests and displacements see annex C123.

Vertical perforated brick HLz, EN 771-1:2011+A1:2015

Table C59.1: Characteristic resistance to local brick failure or brick edge failure of a single anchor under shear loading (Pre-positioned installation)

Anchor rod		M6	M8	M6	M8	-		M8	M10	M8	M10	-		M12	M16	M12	M16
Internal threaded anchor UPM-I		-		-		M6	M8	-		-		M10	M12	-		-	
						11x85						15x85					
Perforated sleeve UPM SH K		12x50		12x85		16x85				16x130		20x85				20x130	
$V_{Rk} = V_{Rk,b} = V_{Rk,c,II} = V_{Rk,c,\perp}$ [kN]; temperature range 50/80°C and 72/120°C																	
Mean compressive strength / Min. compressive strength single brick [1]	Use conditions																
5 / 4 N/mm²	w/w w/d d/d	0,9		1,2		0,9		1,2		0,6		2,0				0,6	
7,5 / 6 N/mm²	w/w w/d d/d	1,2		1,5		1,2		1,5		0,9		3,0				0,9	
10 / 8 N/mm²	w/w w/d d/d	1,5		2,0		1,5		2,0		1,2		4,0				1,2	
12,5 / 10 N/mm²	w/w w/d d/d	2,0		3,0		2,0		3,0		1,5		5,0				1,5	

[1] The minimum compressive strength of the single brick must not be less than 80% of the mean compressive strength.

Table C59.2: Characteristic resistance to local brick failure or brick edge failure of a single anchor under shear loading (Push through installation)

Anchor rod		M10	M12	M16
Perforated sleeve UPM SH K		18x130/200		22x130/200
$V_{Rk} = V_{Rk,b} = V_{Rk,c,II} = V_{Rk,c,\perp}$ [kN]; temperature range 50/80°C and 72/120°C				
Mean compressive strength / Min. compressive strength single brick [1]	Use conditions			
5 / 4 N/mm²	w/w w/d d/d	0,6		
7,5 / 6 N/mm²	w/w w/d d/d	0,9		
10 / 8 N/mm²	w/w w/d d/d	1,2		
12,5 / 10 N/mm²	w/w w/d d/d	1,5		

[1] The minimum compressive strength of the single brick must not be less than 80% of the mean compressive strength.

Factor for job site tests and displacements see annex C123.

Vertical perforated brick HLz, EN 771-1:2011+A1:2015

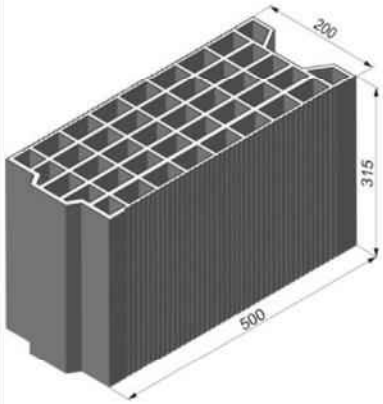

Producer		e.g. Terreal		
Nominal dimensions	[mm]	length L	width W	height H
		500	200	315
Mean gross dry density ρ	[kg/dm³]	≥ 0,7		
Mean compressive strength / Min. compressive strength single brick [1]	[N/mm²]	2,5 / 2 or 5 / 4 or 7,5 / 6 or 10 / 8		
Standard or annex		EN 771-1:2011+A1:2015		

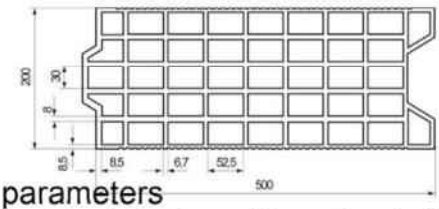

Dimension see also Annex B17

Table C60.1: Installation parameters
(Pre-positioned installation with perforated sleeve UPM SH K)

Anchor rod		**M6**	**M8**	**M6**	**M8**	**-**	**M8**	**M10**	**M8**	**M10**	**-**	**M12**	**M16**	**M12**	**M16**
Internal threaded anchor UPM-I		-		-		**M6 M8** / **11x85**	-		-		**M10 M12** / **15x85**	-		-	
Perforated sleeve UPM SH K		**12x50**		**12x85**		**16x85**			**16x130**		**20x85**			**20x130**	
Anchor rod and internal threaded anchor UPM-I with perforated sleeve UPM SH K															
Max. installation torque	max T_{inst}	[Nm]	2												
General installation parameters															
Edge distance	$c_{min} = c_{cr}$	[mm]	50						80		50			80	
Spacing	s_{min} ∥		100												
	s_{cr} ∥		500												
	s_{min} ⊥		100												
	s_{cr} ⊥		315												
Drilling method															
Hammer drilling with hard metal hammer drill															

[1] The minimum compressive strength of the single brick must not be less than 80% of the mean compressive strength.

Table C60.2: Group factors

Anchor rod		**M6**	**M8**	**M6**	**M8**	**-**	**M8**	**M10**	**M8**	**M10**	**-**	**M12**	**M16**	**M12**	**M16**
Internal threaded anchor UPM-I		-		-		**M6 M8** / **11x85**	-		-		**M10 M12** / **15x85**	-		-	
Perforated sleeve UPM SH K		**12x50**		**12x85**		**16x85**			**16x130**		**20x85**			**20x130**	
Group factors	$\alpha_{g,N}$ (s_{min} ∥)	[-]	1,1												
	$\alpha_{g,V}$ (s_{min} ∥)		1,2												
	$\alpha_{g,N}$ (s_{min} ⊥)		1,1												
	$\alpha_{g,V}$ (s_{min} ⊥)		1,2												

Upat injection system UPM 44 for masonry

Performance
Vertical perforated brick HLz, dimensions, installation parameters, Group factors

Annex C60
Appendix 89 / 153

Vertical perforated brick HLz, EN 771-1:2011+A1:2015

Table C61.1: Installation parameters
(Push through installation with perforated sleeve UPM SH K)

Anchor rod			**M10**	**M12**	**M16**
Perforated sleeve UPM SH K			**18x130/200**		**22x130/200**
Anchor rod with perforated sleeve UPM SH K					
Max. installation torque	max T_{inst}	[Nm]	2		
General installation parameters					
Edge distance	$c_{min} = c_{cr}$	[mm]	80		
Spacing	s_{min} ∥		100		
	s_{cr} ∥		500		
	s_{min} ⊥		100		
	s_{cr} ⊥		315		
Drilling method					
Hammer drilling with hard metal hammer drill					

Table C61.2: Group factors

Anchor rod			**M10**	**M12**	**M16**
Perforated sleeve UPM SH K			**18x130/200**		**22x130/200**
Group factors	$\alpha_{g,N}$ (s_{min} ∥)	[-]	1,1		
	$\alpha_{g,V}$ (s_{min} ∥)		1,2		
	$\alpha_{g,N}$ (s_{min} ⊥)		1,1		
	$\alpha_{g,V}$ (s_{min} ⊥)		1,2		

Vertical perforated brick HLz, EN 771-1:2011+A1:2015

Table C62.1: Characteristic resistance to pull-out failure or brick breakout failure of a single anchor under tension loading (Pre-positioned installation)

Anchor rod		**M6**	**M8**	**M6**	**M8**	**-**		**M8**	**M10**	**M8**	**M10**	**-**		**M12**	**M16**	**M12**	**M16**
Internal threaded anchor UPM-I		**-**		**-**		**M6**	**M8**	**-**		**-**		**M10**	**M12**	**-**		**-**	
						11x85						**15x85**					
Perforated sleeve UPM SH K		**12x50**		**12x85**		**16x85**				**16x130**		**20x85**				**20x130**	
$N_{Rk} = N_{Rk,p} = N_{Rk,b} = N_{Rk,p,c} = N_{Rk,b,c}$ [kN]; temperature range 50/80°C [2)]																	
Mean compressive strength / Min. compressive strength single brick [1)]	Use conditions																
2,5 / 2 N/mm²	w/w w/d	0,5															
	d/d	0,5								0,6		0,5				0,6	
5 / 4 N/mm²	w/w w/d	0,9															
	d/d	0,9		1,2													
7,5 / 6 N/mm²	w/w w/d	1,5															
	d/d	1,5															
10 / 8 N/mm²	w/w w/d	2,0															
	d/d	2,0															

[1)] The minimum compressive strength of the single brick must not be less than 80% of the mean compressive strength.

[2)] For temperature range 72/120°C: $N_{Rk\,(72/120°C)} = 0,83 \cdot N_{Rk\,(50/80°C)}$.

Table C62.2: Characteristic resistance to pull-out failure or brick breakout failure of a single anchor under tension loading (Push through installation)

Anchor rod		**M10**	**M12**	**M16**
Perforated sleeve UPM SH K		**18x130/200**		**22x130/200**
$N_{Rk} = N_{Rk,p} = N_{Rk,b} = N_{Rk,p,c} = N_{Rk,b,c}$ [kN]; temperature range 50/80°C [2)]				
Mean compressive strength / Min. compressive strength single brick [1)]	Use conditions			
2,5 / 2 N/mm²	w/w w/d	0,5		
	d/d	0,6		
5 / 4 N/mm²	w/w w/d	0,9		
	d/d	1,2		
7,5 / 6 N/mm²	w/w w/d	1,5		
	d/d	1,5		
10 / 8 N/mm²	w/w w/d	2,0		
	d/d	2,0		

[1)] The minimum compressive strength of the single brick must not be less than 80% of the mean compressive strength.

[2)] For temperature range 72/120°C: $N_{Rk\,(72/120°C)} = 0,83 \cdot N_{Rk\,(50/80°C)}$.

Factor for job site tests and displacements see annex C123.

Vertical perforated brick HLz, EN 771-1:2011+A1:2015

Table C63.1: Characteristic resistance to local brick failure or brick edge failure of a single anchor under shear loading (Pre-positioned installation)

Anchor rod		**M6**	**M8**	**M6**	**M8**	**-**	**M8**	**M10**	**M8**	**M10**	**-**	**M12**	**M16**	**M12**	**M16**
Internal threaded anchor UPM-I		-		-		**M6** / **11x85**	**M8** / **11x85**	-	-		**M10** / **15x85**	**M12** / **15x85**	-	-	
Perforated sleeve UPM SH K		**12x50**		**12x85**		**16x85**			**16x130**		**20x85**			**20x130**	
$V_{Rk} = V_{Rk,b} = V_{Rk,c,II} = V_{Rk,c,\perp}$ **[kN]; temperature range 50/80°C and 72/120°C**															
Mean compressive strength / Min. compressive strength single brick [1]	Use conditions														
2,5 / 2 N/mm²	w/w, w/d, d/d	0,30		0,60		0,3	0,60		0,60		0,90			0,75	
5 / 4 N/mm²	w/w, w/d, d/d	0,75		1,20		0,7	1,20		1,20		2,00			1,50	
7,5 / 6 N/mm²	w/w, w/d, d/d	0,90		2,00		0,9	2,00		1,50		3,00			2,00	
10 / 8 N/mm²	w/w, w/d, d/d	1,50		2,50		1,5	2,50		2,00		4,00			3,00	

[1] The minimum compressive strength of the single brick must not be less than 80% of the mean compressive strength.

Table C63.2: Characteristic resistance to local brick failure or brick edge failure of a single anchor under shear loading (Push through installation)

Anchor rod		**M10**	**M12**	**M16**
Perforated sleeve UPM SH K		**18x130/200**		**22x130/200**
$V_{Rk} = V_{Rk,b} = V_{Rk,c,II} = V_{Rk,c,\perp}$ **[kN]; temperature range 50/80°C and 72/120°C**				
Mean compressive strength / Min. compressive strength single brick [1]	Use conditions			
2,5 / 2 N/mm²	w/w, w/d, d/d	0,60		0,75
5 / 4 N/mm²	w/w, w/d, d/d	1,20		1,50
7,5 / 6 N/mm²	w/w, w/d, d/d	1,50		2,00
10 / 8 N/mm²	w/w, w/d, d/d	2,00		3,00

[1] The minimum compressive strength of the single brick must not be less than 80% of the mean compressive strength.

Factor for job site tests and displacements see annex C123.

Vertical perforated brick HLz, EN 771-1:2011+A1:2015

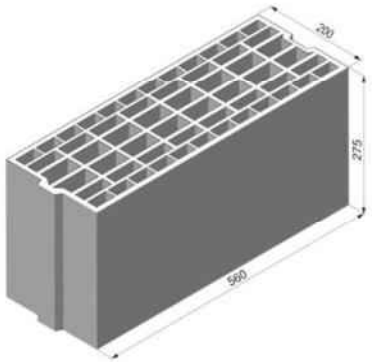

Producer		e.g. Imery		
Nominal dimensions	[mm]	length L	width W	height H
		560	200	275
Mean gross dry density ρ	[kg/dm³]	≥ 0,7		
Mean compressive strength / Min. compressive strength single brick [1)]	[N/mm²]	5 / 4 or 8 / 6 or 10 / 8		
Standard or annex		EN 771-1:2011+A1:2015		

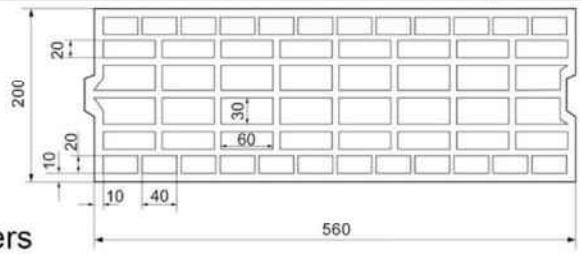

Dimension see also Annex B17

Table C64.1: Installation parameters

Anchor rod			M8	M10	M10	M12	M12	M16	M16
Perforated sleeve UPM SH K			16x130		18x130/200		20x130		22x130/200
Anchor rod with perforated sleeve UPM SH K									
Max. installation torque	$\max T_{inst}$	[Nm]	2						
General installation parameters									
Edge distance	$c_{min} = c_{cr}$	[mm]	80						
Spacing	s_{min} II = s_{cr} II		560						
	$s_{min} \perp = s_{cr} \perp$		275						
Drilling method									
Hammer drilling with hard metal hammer drill									

[1)] The minimum compressive strength of the single brick must not be less than 80% of the mean compressive strength.

Table C64.2: Group factors

Anchor rod			M8	M10	M10	M12	M12	M16	M16
Perforated sleeve UPM SH K			16x130		18x130/200		20x130		22x130/200
Group factors	$\alpha_{g,N}$ (s_{min} II)	[-]	2						
	$\alpha_{g,V}$ (s_{min} II)								
	$\alpha_{g,N}$ ($s_{min} \perp$)								
	$\alpha_{g,V}$ ($s_{min} \perp$)								

Vertical perforated brick HLz, EN 771-1:2011+A1:2015

Table C65.1: Characteristic resistance to pull-out failure or brick breakout failure of a single anchor under tension loading

Anchor rod		**M8**	**M10**	**M10**	**M12**	**M12**	**M16**	**M16**
Perforated sleeve UPM SH K		**16x130**		**18x130/200**		**20x130**		**22x130/200**
$N_{Rk} = N_{Rk,p} = N_{Rk,b} = N_{Rk,p,c} = N_{Rk,b,c}$ [kN]; temperature range 50/80°C [2)]								
Mean compressive strength / Min. compressive strength single brick [1)]	Use conditions							
5 / 4 N/mm²	w/w w/d	0,9				1,2		
	d/d	1,2				1,5		
8 / 6 N/mm²	w/w w/d	1,5				2,0		
	d/d	1,5				2,0		
10 / 8 N/mm²	w/w w/d	2,0				2,5		
	d/d	2,5				3,0		

[1)] The minimum compressive strength of the single brick must not be less than 80% of the mean compressive strength.

[2)] For temperature range 72/120°C: $N_{Rk\ (72/120°C)} = 0{,}83 \cdot N_{Rk\ (50/80°C)}$.

Table C65.2: Characteristic resistance to local brick failure or brick edge failure of a single anchor under shear loading

Anchor rod		**M8**	**M10**	**M10**	**M12**	**M12**	**M16**	**M16**
Perforated sleeve UPM SH K		**16x130**		**18x130/200**		**20x130**		**22x130/200**
$V_{Rk} = V_{Rk,b} = V_{Rk,c,II} = V_{Rk,c,\perp}$ [kN]; temperature range 50/80°C and 72/120°C								
Mean compressive strength / Min. compressive strength single brick [1)]	Use conditions							
5 / 4 N/mm²	w/w w/d	0,9						
	d/d							
8 / 6 N/mm²	w/w w/d	1,5						
	d/d							
10 / 8 N/mm²	w/w w/d	2,0						
	d/d							

[1)] The minimum compressive strength of the single brick must not be less than 80% of the mean compressive strength.

Factor for job site tests and displacements see annex C123.

Vertical perforated brick HLz, EN 771-1:2011+A1:2015

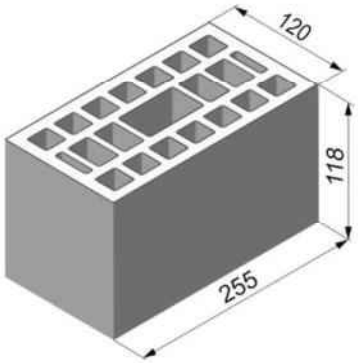

Producer		e.g. Wienerberger		
Nominal dimensions	[mm]	length L	width W	height H
		255	120	118
Mean gross dry density ρ	[kg/dm³]	≥ 1,0		
Mean compressive strength / Min. compressive strength single brick [1)]	[N/mm²]	2,5 / 2 or 5 / 4 or 8 / 6 or 10 / 8 or 12,5 / 10 or 15 / 12		
Standard or annex		EN 771-1:2011+A1:2015		

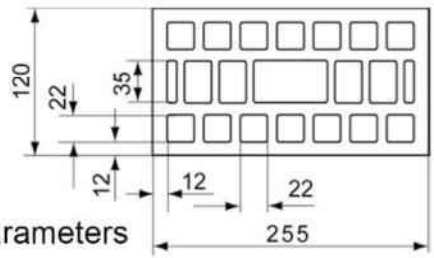

Dimension see also Annex B18

Table C66.1: Installation parameters

Anchor rod	M6	M8	M6	M8	-		M8	M10	-		M12	M16
Internal threaded anchor UPM-I	-		-		M6	M8	-		M10	M12	-	
					11x85				15x85			
Perforated sleeve UPM SH K	12x50		12x85		16x85				20x85			
Anchor rod and internal threaded anchor UPM-I with perforated sleeve UPM SH K												
Max. installation torque $\max T_{inst}$	[Nm]	2										
General installation parameters												
Edge distance $c_{min} = c_{cr}$	[mm]	60										
Spacing s_{cr} II = s_{min} II	[mm]	255										
Spacing $s_{cr} \perp = s_{min} \perp$	[mm]	120										
Drilling method												
Hammer drilling with hard metal hammer drill												

[1)] The minimum compressive strength of the single brick must not be less than 80% of the mean compressive strength.

Table C66.2: Group factors

Anchor rod	M6	M8	M6	M8	-		M8	M10	-		M12	M16
Internal threaded anchor UPM-I	-		-		M6	M8	-		M10	M12	-	
					11x85				15x85			
Perforated sleeve UPM SH K	12x50		12x85		16x85				20x85			
Group factors $\alpha_{g,N}$ (s_{min} II)	[-]	2										
Group factors $\alpha_{g,V}$ (s_{min} II)	[-]	2										
Group factors $\alpha_{g,N}$ ($s_{min} \perp$)	[-]	2										
Group factors $\alpha_{g,V}$ ($s_{min} \perp$)	[-]	2										

Upat injection system UPM 44 for masonry

Performance
Vertical perforated brick HLz, dimensions, installation parameters, Group factors

Annex C66
Appendix 95 / 153

Vertical perforated brick HLz, EN 771-1:2011+A1:2015

Table C67.1: Characteristic resistance to pull-out failure or brick breakout failure of a single anchor under tension loading

Anchor rod		M6	M8	M6	M8	-		M8	M10	-		M12	M16
Internal threaded anchor UPM-I		-		-		M6	M8	-		M10	M12	-	
						11x85				15x85			
Perforated sleeve UPM SH K		12x50		12x85		16x85				20x85			
$N_{Rk} = N_{Rk,p} = N_{Rk,b} = N_{Rk,p,c} = N_{Rk,b,c}$ [kN]; temperature range 50/80°C [1]													
Mean compressive strength / Min. compressive strength single brick [2]	Use conditions												
2,5 / 2 N/mm²	w/w w/d	0,40		0,50						-[3]			
	d/d	0,50		0,50						-[3]			
5 / 4 N/mm²	w/w w/d	0,90		0,90						0,50			
	d/d	0,90		1,20						0,50			
8 / 6 N/mm²	w/w w/d	1,20		1,50						0,75			
	d/d	1,50		1,50						0,75			
10 / 8 N/mm²	w/w w/d	1,50		2,00						0,90			
	d/d	2,00		2,00						0,90			
12,5 / 10 N/mm²	w/w w/d	2,00		2,50						1,20			
	d/d	2,50		2,50						1,20			
15 / 12 N/mm²	w/w w/d	2,50		3,00						1,50			
	d/d	3,00		3,50						1,50			

[1] For temperature range 72/120°C: $N_{Rk\,(72/120°C)} = 0{,}83 \cdot N_{Rk\,(50/80°C)}$.

[2] The minimum compressive strength of the single brick must not be less than 80% of the mean compressive strength.

[3] No performance assessed.

Factor for job site tests and displacements see annex C123.

Vertical perforated brick HLz, EN 771-1:2011+A1:2015

Table C68.1: Characteristic resistance to local brick failure or brick edge failure of a single anchor under shear loading

Anchor rod		**M6**	**M8**	**M6**	**M8**	**-**	**M8**	**M10**	**-**	**M12**	**M16**
Internal threaded anchor UPM-I		**-**		**-**		**M6** / **11x85**	**M8** / **11x85**	**-**	**M10** / **15x85**	**M12** / **15x85**	**-**
Perforated sleeve UPM SH K		**12x50**		**12x85**		**16x85**			**20x85**		
$V_{Rk} = V_{Rk,b} = V_{Rk,c,II} = V_{Rk,c,\perp}$ [kN]; temperature range 50/80°C and 72/120°C											
Mean compressive strength / Min. compressive strength single brick [1]	Use condition										
2,5 / 2 N/mm²	w/w, w/d, d/d	0,60	0,75	0,60	0,75	0,90					
5 / 4 N/mm²	w/w, w/d, d/d	1,20	1,50	1,20	1,50	2,00					
8 / 6 N/mm²	w/w, w/d, d/d	2,00	2,00	2,00	2,00	2,50					
10 / 8 N/mm²	w/w, w/d, d/d	2,50	3,00	2,50	3,00	3,50					
12,5 / 10 N/mm²	w/w, w/d, d/d	3,00	3,50	3,00	3,50	4,50					
15 / 12 N/mm²	w/w, w/d, d/d	4,00	4,50	4,00	4,50	5,50					

[1] The minimum compressive strength of the single brick must not be less than 80% of the mean compressive strength.

Factor for job site tests and displacements see annex C123.

Vertical perforated brick HLz, EN 771-1:2011+A1:2015

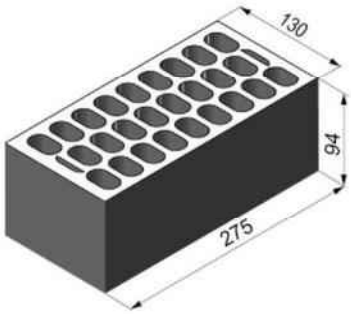

Producer		e.g. Cermanica Farreny S.A.		
Nominal dimensions	[mm]	length L	width W	height H
		275	130	94
Mean gross dry density ρ	[kg/dm³]	≥ 0,8		
Mean compressive strength / Min. compressive strength single brick [1]	[N/mm²]	7,5 / 6 or 10 / 8 or 15 / 12 or 20 / 16 or 25 / 20		
Standard or annex		EN 771-1:2011+A1:2015		

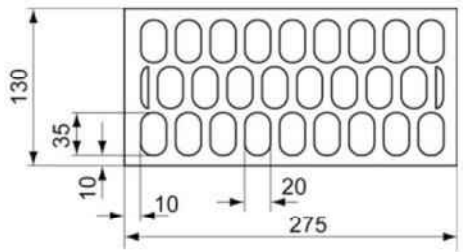

Dimension see also Annex B18

Table C69.1: Installation parameters

Anchor rod	**M6**	**M8**	**M6**	**M8**	**-**		**M8**	**M10**	**-**		**M12**	**M16**
Internal threaded anchor UPM-I	**-**		**-**		**M6**	**M8**	**-**		**M10**	**M12**	**-**	
					11x85				**15x85**			
Perforated sleeve UPM SH K	**12x50**		**12x85**		**16x85**				**20x85**			
Anchor rod and internal threaded anchor UPM-I with perforated sleeve UPM SH K												
Max. installation torque $\max T_{inst}$	[Nm]	2										
General installation parameters												
Edge distance $c_{min} = c_{cr}$	[mm]	100							120			
Spacing s_{cr} II = s_{min} II	[mm]	275										
Spacing $s_{cr} \perp = s_{min} \perp$	[mm]	95										
Drilling method												
Hammer drilling with hard metal hammer drill												

[1] The minimum compressive strength of the single brick must not be less than 80% of the mean compressive strength.

Table C69.2: Group factors

Anchor rod	**M6**	**M8**	**M6**	**M8**	**-**		**M8**	**M10**	**-**		**M12**	**M16**
Internal threaded anchor UPM-I	**-**		**-**		**M6**	**M8**	**-**		**M10**	**M12**	**-**	
					11x85				**15x85**			
Perforated sleeve UPM SH K	**12x50**		**12x85**		**16x85**				**20x85**			
Group factors $\alpha_{g,N}$ (s_{min} II)	[-]	2										
Group factors $\alpha_{g,V}$ (s_{min} II)	[-]	2										
Group factors $\alpha_{g,N}$ ($s_{min} \perp$)	[-]	2										
Group factors $\alpha_{g,V}$ ($s_{min} \perp$)	[-]	2										

Vertical perforated brick HLz, EN 771-1:2011+A1:2015

Table C70.1: Characteristic resistance to pull-out failure or brick breakout failure of a single anchor under tension loading

Anchor rod		**M6**	**M8**	**M6**	**M8**	**-**	**M8**	**M10**	**-**	**M12**	**M16**
Internal threaded anchor UPM-I		**-**		**-**		**M6** / **11x85**	**M8** / **11x85**	**-**	**M10** / **15x85**	**M12** / **15x85**	**-**
Perforated sleeve UPM SH K		**12x50**		**12x85**		**16x85**			**20x85**		
$N_{Rk} = N_{Rk,p} = N_{Rk,b} = N_{Rk,p,c} = N_{Rk,b,c}$ [kN]; temperature range 50/80°C [2)]											
Mean compressive strength / Min. compressive strength single brick [1)]	Use conditions										
7,5 / 6 N/mm²	w/w, w/d	0,40		0,90							
	d/d	0,40		0,90							
10 / 8 N/mm²	w/w, w/d	0,50		1,20							
	d/d	0,60		1,20							
15 / 12 N/mm²	w/w, w/d	0,75		1,50							
	d/d	0,90		2,00							
20 / 16 N/mm²	w/w, w/d	0,90		2,00							
	d/d	1,20		2,50							
25 / 20 N/mm²	w/w, w/d	1,20		3,00							
	d/d	1,50		3,00							

[1)] The minimum compressive strength of the single brick must not be less than 80% of the mean compressive strength.

[2)] For temperature range 72/120°C: $N_{Rk\,(72/120°C)} = 0{,}83 \cdot N_{Rk\,(50/80°C)}$.

Vertical perforated brick HLz, EN 771-1:2011+A1:2015

Table C71.1: Characteristic resistance to local brick failure or brick edge failure of a single anchor under shear loading

Anchor rod		**M6**	**M8**	**M6**	**M8**	**-**	**M8**	**M10**	**-**	**M12**	**M16**
Internal threaded anchor UPM-I		**-**		**-**		**M6** / **11x85**	**M8** / **11x85**	**-**	**M10** / **15x85**	**M12** / **15x85**	**-**
Perforated sleeve UPM SH K		**12x50**		**12x85**		**16x85**			**20x85**		
$V_{Rk} = V_{Rk,b} = V_{Rk,c,II} = V_{Rk,c,\perp}$ [kN]; temperature range 50/80°C and 72/120°C											
Mean compressive strength / Min. compressive strength single brick [1]	Use conditions										
7,5 / 6 N/mm²	w/w, w/d, d/d	1,2		1,2							
10 / 8 N/mm²	w/w, w/d, d/d	1,5		1,5							
15 / 12 N/mm²	w/w, w/d, d/d	2,0		2,5							
20 / 16 N/mm²	w/w, w/d, d/d	3,0		3,0							
25 / 20 N/mm²	w/w, w/d, d/d	4,0		4,0							

[1] The minimum compressive strength of the single brick must not be less than 80% of the mean compressive strength.

Factor for job site tests and displacements see annex C123.

Vertical perforated brick HLz, EN 771-1:2011+A1:2015

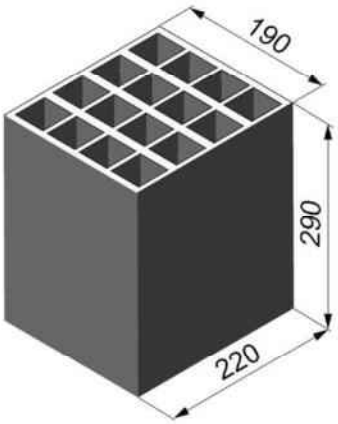

Producer		e.g. Perceram		
Nominal dimensions	[mm]	length L	width W	height H
		220	190	290
Mean gross dry density ρ	[kg/dm³]	≥ 0,7		
Mean compressive strength / Min. compressive strength single brick [1)]	[N/mm²]	7,5 / 6 or 10 / 8 or 12,5 / 10		
Standard or annex		EN 771-1:2011+A1:2015		

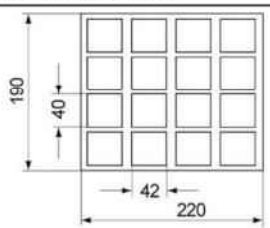

Dimension see also Annex B18

Table C72.1: Installation parameters
(Pre-positioned installation with perforated sleeve UPM SH K)

Anchor rod	**M6**	**M8**	**M6**	**M8**	**-**		**M8**	**M10**	**M8**	**M10**	**-**		**M12**	**M16**	**M12**	**M16**
Internal threaded anchor UPM-I	**-**		**-**		**M6**	**M8**	**-**		**-**		**M10**	**M12**	**-**		**-**	
					11x85						**15x85**					
Perforated sleeve UPM SH K	**12x50**		**12x85**		**16x85**				**16x130**		**20x85**				**20x130**	
Anchor rod and internal threaded anchor UPM-I with perforated sleeve UPM SH K																
Max. installation torque $\max T_{inst}$	[Nm]	2														
General installation parameters																
Edge distance $c_{min} = c_{cr}$	[mm]	110														
Spacing s_{min} II = s_{cr} II	[mm]	220														
Spacing $s_{min} \perp = s_{cr} \perp$	[mm]	290														
Drilling method																
Hammer drilling with hard metal hammer drill																

[1)] The minimum compressive strength of the single brick must not be less than 80% of the mean compressive strength.

Table C72.2: Group factors

Anchor rod	**M6**	**M8**	**M6**	**M8**	**-**		**M8**	**M10**	**M8**	**M10**	**-**		**M12**	**M16**	**M12**	**M16**
Internal threaded anchor UPM-I	**-**		**-**		**M6**	**M8**	**-**		**-**		**M10**	**M12**	**-**		**-**	
					11x85						**15x85**					
Perforated sleeve UPM SH K	**12x50**		**12x85**		**16x85**				**16x130**		**20x85**				**20x130**	
Group factors $\alpha_{g,N}$ (s_{min} II)	[-]	2														
Group factors $\alpha_{g,V}$ (s_{min} II)	[-]	2														
Group factors $\alpha_{g,N}$ ($s_{min} \perp$)	[-]	2														
Group factors $\alpha_{g,V}$ ($s_{min} \perp$)	[-]	2														

Vertical perforated brick HLz, EN 771-1:2011+A1:2015

Table C73.1: Installation parameters
(Push through installation with perforated sleeve UPM SH K)

Anchor rod			**M10**	**M12**	**M16**
Perforated sleeve UPM SH K			**18x130/200**		**22x130/200**
Anchor rod with perforated sleeve UPM SH K					
Max. installation torque	$\max T_{inst}$	[Nm]	2		
General installation parameters					
Edge distance	$c_{min} = c_{cr}$	[mm]	110		
Spacing	$s_{min} \parallel = s_{cr} \parallel$		220		
	$s_{min} \perp = s_{cr} \perp$		290		
Drilling method					
Hammer drilling with hard metal hammer drill					

Table C73.2: Group factors

Anchor rod			**M10**	**M12**	**M16**
Perforated sleeve UPM SH K			**18x130/200**		**22x130/200**
Group factors	$\alpha_{g,N}$ ($s_{min} \parallel$)	[-]	2		
	$\alpha_{g,V}$ ($s_{min} \parallel$)				
	$\alpha_{g,N}$ ($s_{min} \perp$)				
	$\alpha_{g,V}$ ($s_{min} \perp$)				

Vertical perforated brick HLz, EN 771-1:2011+A1:2015

Table C74.1: Characteristic resistance to pull-out failure or brick breakout failure of a single anchor under tension loading (Pre-positioned installation)

Anchor rod		**M6**	**M8**	**M6**	**M8**	**-**	**M8**	**M10**	**M8**	**M10**	**-**	**M12**	**M16**	**M12**	**M16**
Internal threaded anchor UPM-I		-		-		**M6** / **11x85**	-	**M8**	-		**M10** / **15x85**	-	**M12**	-	
Perforated sleeve UPM SH K		**12x50**		**12x85**		**16x85**			**16x130**		**20x85**			**20x130**	
$N_{Rk} = N_{Rk,p} = N_{Rk,b} = N_{Rk,p,c} = N_{Rk,b,c}$ [kN]; temperature range 50/80°C [2)]															
Mean compressive strength / Min. compressive strength single brick [1)]	Use conditions														
7,5 / 6 N/mm²	w/w w/d	0,3		1,2		1,2			1,5		1,2			1,5	
	d/d	0,4		1,5		1,5			1,5		1,5			1,5	
10 / 8 N/mm²	w/w w/d	0,5		1,5		1,5			2,0		1,5			2,0	
	d/d	0,5		2,0		2,0			2,5		2,0			2,5	
12,5 / 10 N/mm²	w/w w/d	0,6		2,0		2,0			2,5		2,0			2,5	
	d/d	0,6		2,5		2,5			3,0		2,5			3,0	

[1)] The minimum compressive strength of the single brick must not be less than 80% of the mean compressive strength.

[2)] For temperature range 72/120°C: $N_{Rk\ (72/120°C)} = 0{,}83 \cdot N_{Rk\ (50/80°C)}$.

Table C74.2: Characteristic resistance to pull-out failure or brick breakout failure of a single anchor under tension loading (Push through installation)

Anchor rod		**M10**	**M12**	**M16**
Perforated sleeve UPM SH K		**18x130/200**		**22x130/200**
$N_{Rk} = N_{Rk,p} = N_{Rk,b} = N_{Rk,p,c} = N_{Rk,b,c}$ [kN]; temperature range 50/80°C [2)]				
Mean compressive strength / Min. compressive strength single brick [1)]	Use conditions			
7,5 / 6 N/mm²	w/w w/d	1,5		
	d/d	1,5		
10 / 8 N/mm²	w/w w/d	2,0		
	d/d	2,5		
12,5 / 10 N/mm²	w/w w/d	2,5		
	d/d	3,0		

[1)] The minimum compressive strength of the single brick must not be less than 80% of the mean compressive strength.

[2)] For temperature range 72/120°C: $N_{Rk\ (72/120°C)} = 0{,}83 \cdot N_{Rk\ (50/80°C)}$.

Factor for job site tests and displacements see annex C123.

Vertical perforated brick HLz, EN 771-1:2011+A1:2015

Table C75.1: Characteristic resistance to local brick failure or brick edge failure of a single anchor under shear loading (Pre-positioned installation)

Anchor rod		**M6**	**M8**	**M6**	**M8**	**-**	**M8**	**M10**	**M8**	**M10**	**-**	**M12**	**M16**	**M12**	**M16**
Internal threaded anchor UPM-I		-		-		**M6** / **11x85**	**M8** / **11x85**	-	-		**M10** / **15x85**	**M12** / **15x85**	-	-	
Perforated sleeve UPM SH K		**12x50**		**12x85**		**16x85**			**16x130**		**20x85**			**20x130**	
$V_{Rk} = V_{Rk,b} = V_{Rk,c,II} = V_{Rk,c,\perp}$ [kN]; temperature range 50/80°C and 72/120°C															
Mean compressive strength / Min. compressive strength single brick [1]	Use conditions														
7,5 / 6 N/mm²	w/w, w/d, d/d	1,5		1,5		1,5			2,5		1,5			2,0	
10 / 8 N/mm²	w/w, w/d, d/d	2,0		2,0		2,0			3,5		2,0			3,0	
12,5 / 10 N/mm²	w/w, w/d, d/d	2,5		3,0		3,0			4,5		3,0			3,5	

[1] The minimum compressive strength of the single brick must not be less than 80% of the mean compressive strength.

Table C75.2: Characteristic resistance to local brick failure or brick edge failure of a single anchor under shear loading (Push through installation)

Anchor rod		**M10**	**M12**	**M16**
Perforated sleeve UPM SH K		**18x130/200**		**22x130/200**
$V_{Rk} = V_{Rk,b} = V_{Rk,c,II} = V_{Rk,c,\perp}$ [kN]; temperature range 50/80°C and 72/120°C				
Mean compressive strength / Min. compressive strength single brick [1]	Use conditions			
7,5 / 6 N/mm²	w/w, w/d, d/d	2,0		
10 / 8 N/mm²	w/w, w/d, d/d	3,0		
12,5 / 10 N/mm²	w/w, w/d, d/d	3,5		

[1] The minimum compressive strength of the single brick must not be less than 80% of the mean compressive strength.

Factor for job site tests and displacements see annex C123.

Vertical perforated brick HLz, EN 771-1:2011+A1:2015

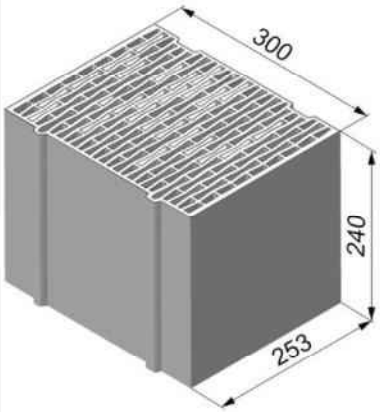

Producer		e.g. Ziegelwerk Brenna		
Nominal dimensions	[mm]	length L	width W	height H
		253	300	240
Mean gross dry density ρ	[kg/dm³]	≥ 0,8		
Mean compressive strength / Min. compressive strength single brick [1]	[N/mm²]	2,5 / 2 or 5 / 4 or 8 / 6		
Standard or annex		EN 771-1:2011+A1:2015		

Dimension see also Annex B18

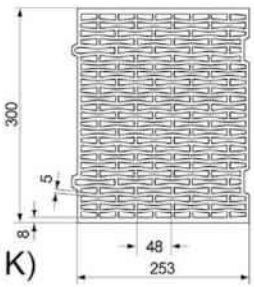

Table C76.1: Installation parameters
(Pre-positioned installation with perforated sleeve UPM SH K)

Anchor rod	**M6**	**M8**	**M6**	**M8**	**-**		**M8**	**M10**	**M8**	**M10**	**-**		**M12**	**M16**	**M12**	**M16**
Internal threaded anchor UPM-I	**-**		**-**		**M6**	**M8**	**-**		**-**		**M10**	**M12**	**-**		**-**	
					11x85						**15x85**					
Perforated sleeve UPM SH K	**12x50**		**12x85**		**16x85**				**16x130**		**20x85**				**20x130**	
Anchor rod and internal threaded anchor UPM-I with perforated sleeve UPM SH K																
Max. installation torque $\max T_{inst}$	[Nm]	2														
General installation parameters																
Edge distance $c_{min} = c_{cr}$	[mm]	60														
Spacing $s_{min}\ \| = s_{cr}\ \|$	[mm]	255														
Spacing $s_{min} \perp = s_{cr} \perp$	[mm]	240														
Drilling method																
Hammer drilling with hard metal hammer drill																

[1] The minimum compressive strength of the single brick must not be less than 80% of the mean compressive strength.

Table C76.2: Group factors

Anchor rod	**M6**	**M8**	**M6**	**M8**	**-**		**M8**	**M10**	**M8**	**M10**	**-**		**M12**	**M16**	**M12**	**M16**
Internal threaded anchor UPM-I	**-**		**-**		**M6**	**M8**	**-**		**-**		**M10**	**M12**	**-**		**-**	
					11x85						**15x85**					
Perforated sleeve UPM SH K	**12x50**		**12x85**		**16x85**				**16x130**		**20x85**				**20x130**	
Group factors $\alpha_{g,N}$ ($s_{min}\ \|$)	[-]	2														
Group factors $\alpha_{g,V}$ ($s_{min}\ \|$)	[-]	2														
Group factors $\alpha_{g,N}$ ($s_{min} \perp$)	[-]	2														
Group factors $\alpha_{g,V}$ ($s_{min} \perp$)	[-]	2														

Upat injection system UPM 44 for masonry

Performance
Vertical perforated brick HLz, dimensions, installation parameters, Group factors

Annex C76
Appendix 105 / 153

Vertical perforated brick HLz, EN 771-1:2011+A1:2015

Table C77.1: Installation parameters
(Push through installation with perforated sleeve UPM SH K)

Anchor rod			**M10**	**M12**	**M16**
Perforated sleeve UPM SH K			**18x130/200**		**22x130/200**
Anchor rod with perforated sleeve UPM SH K					
Max. installation torque	T_{inst}	[Nm]	2		
General installation parameters					
Edge distance	$c_{min} = c_{cr}$	[mm]	60		
Spacing	$s_{min} \parallel = s_{cr} \parallel$	[mm]	255		
	$s_{min} \perp = s_{cr} \perp$	[mm]	240		
Drilling method					
Hammer drilling with hard metal hammer drill					

Table C77.2: Group factors

Anchor rod			**M10**	**M12**	**M16**
Perforated sleeve UPM SH K			**18x130/200**		**22x130/200**
Group factors	$\alpha_{g,N}$ ($s_{min} \parallel$)	[-]	2		
	$\alpha_{g,V}$ ($s_{min} \parallel$)	[-]			
	$\alpha_{g,N}$ ($s_{min} \perp$)	[-]			
	$\alpha_{g,V}$ ($s_{min} \perp$)	[-]			

Vertical perforated brick HLz, EN 771-1:2011+A1:2015

Table C78.1: Characteristic resistance to pull-out failure or brick breakout failure of a single anchor under tension loading (Pre-positioned installation)

Anchor rod		**M6**	**M8**	**M6**	**M8**	**-**	**M8**	**M10**	**M8**	**M10**	**-**	**M12**	**M16**	**M12**	**M16**
Internal threaded anchor UPM-I		-		-		**M6** / **11x85**	-		-		**M10** / **15x85**	-		-	
Perforated sleeve UPM SH K		**12x50**		**12x85**		**16x85**			**16x130**		**20x85**			**20x130**	
$N_{Rk} = N_{Rk,p} = N_{Rk,b} = N_{Rk,p,c} = N_{Rk,b,c}$ [kN]; temperature range 50/80°C [2)]															
Mean compressive strength / Min. compressive strength single brick [1)]	Use conditions														
2,5 / 2 N/mm²	w/w w/d	-[3)]		0,50		0,50			0,40		0,50			0,40	
	d/d	0,30		0,50		0,50			0,50		0,50			0,50	
5 / 4 N/mm²	w/w w/d	0,50		0,90		0,90			0,90		0,90			0,90	
	d/d	0,60		0,90		0,90			0,90		0,90			0,90	
8 / 6 N/mm²	w/w w/d	0,75		1,50		1,50			1,20		1,50			1,20	
	d/d	0,90		1,50		1,50			1,50		1,50			1,50	

[1)] The minimum compressive strength of the single brick must not be less than 80% of the mean compressive strength.

[2)] For temperature range 72/120°C: $N_{Rk\ (72/120°C)} = 0{,}83 \cdot N_{Rk\ (50/80°C)}$.

[3)] No performance assessed.

Table C78.2: Characteristic resistance to pull-out failure or brick breakout failure of a single anchor under tension loading (Push through installation)

Anchor rod		**M10**	**M12**	**M16**
Perforated sleeve UPM SH K		**18x130/200**		**22x130/200**
$N_{Rk} = N_{Rk,p} = N_{Rk,b} = N_{Rk,p,c} = N_{Rk,b,c}$ [kN]; temperature range 50/80°C [2)]				
Mean compressive strength / Min. compressive strength single brick [1)]	Use conditions			
2,5 / 2 N/mm²	w/w w/d	0,4		
	d/d	0,5		
5 / 4 N/mm²	w/w w/d	0,9		
	d/d	0,9		
8 / 6 N/mm²	w/w w/d	1,2		
	d/d	1,5		

[1)] The minimum compressive strength of the single brick must not be less than 80% of the mean compressive strength.

[2)] For temperature range 72/120°C: $N_{Rk\ (72/120°C)} = 0{,}83 \cdot N_{Rk\ (50/80°C)}$.

Factor for job site tests and displacements see annex C123.

Vertical perforated brick HLz, EN 771-1:2011+A1:2015

Table C79.1: Characteristic resistance to local brick failure or brick edge failure of a single anchor under shear loading (Pre-positioned installation)

Anchor rod		**M6**	**M8**	**M6**	**M8**	**-**	**M8**	**M10**	**M8**	**M10**	**-**	**M12**	**M16**	**M12**	**M16**
Internal threaded anchor UPM-I		-		-		**M6** / **11x85**	**M8** / **11x85**	-	-		**M10** / **15x85**	**M12** / **15x85**	-	-	
Perforated sleeve UPM SH K		**12x50**		**12x85**		**16x85**			**16x130**		**20x85**			**20x130**	
$V_{Rk} = V_{Rk,b} = V_{Rk,c,II} = V_{Rk,c,\perp}$ **[kN]; temperature range 50/80°C and 72/120°C**															
Mean compressive strength / Min. compressive strength single brick [1]	Use conditions														
2,5 / 2 N/mm²	w/w, w/d, d/d	0,5									0,6				
5 / 4 N/mm²	w/w, w/d, d/d	0,9									1,2				
8 / 6 N/mm²	w/w, w/d, d/d	1,5									1,5				

[1] The minimum compressive strength of the single brick must not be less than 80% of the mean compressive strength.

Table C79.2: Characteristic resistance to local brick failure or brick edge failure of a single anchor under shear loading (Push through installation)

Anchor rod	**M10**	**M12**	**M16**
Perforated sleeve UPM SH K	**18x130/200**		**22x130/200**
$V_{Rk} = V_{Rk,b} = V_{Rk,c,II} = V_{Rk,c,\perp}$ **[kN]; temperature range 50/80°C and 72/120°C**			
Mean compressive strength / Min. compressive strength single brick [1]	Use conditions		
2,5 / 2 N/mm²	w/w, w/d, d/d	0,5	0,6
5 / 4 N/mm²	w/w, w/d, d/d	0,9	1,2
8 / 6 N/mm²	w/w, w/d, d/d	1,5	1,5

[1] The minimum compressive strength of the single brick must not be less than 80% of the mean compressive strength.

Factor for job site tests and displacements see annex C123.

Vertical perforated brick HLz, Porotherm W 44, filled with mineral wool, EN 771-1:2011+A1:2015

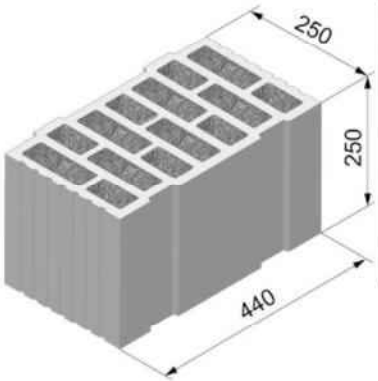

Producer		e.g. Wienerberger		
Nominal dimensions	[mm]	length L	width W	height H
		250	440	250
Mean gross dry density ρ	[kg/dm³]	0,7		
Mean compressive strength / Min. compressive strength single brick [1)]	[N/mm²]	8 / 6 or 10 / 8 or 12,5 / 10		
Standard or annex		EN 771-1:2011+A1:2015		

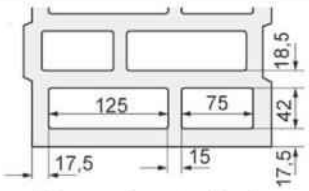

Dimension see also Annex B18

Table C80.1: Installation parameters
(Pre-positioned installation with perforated sleeve UPM SH K)

Anchor rod			M6	M8	M6	M8	-		M8	M10	M8	M10	-		M12	M16	M12	M16	M12	M16
Internal threaded anchor UPM-I			-		-		M6	M8	-		-		M10	M12	-		-		-	
							11x85						15x85							
Perforated sleeve UPM SH K			12x50		12x85		16x85				16x130		20x85				20x130		20x200	
Anchor rod and internal threaded anchor UPM-I with perforated sleeve UPM SH K																				
Max. installation torque	max T_{inst}	[Nm]	2						5		2		5		6					
General installation parameters																				
Edge distance	$c_{min} = c_{cr}$	[mm]	60																	
Spacing	s_{min} ∥		80																	
	s_{cr} ∥		250																	
	s_{min} ⊥		80																	
	s_{cr} ⊥		250																	
Drilling method																				
Rotary drilling with carbide drill																				

[1)] The minimum compressive strength of the single brick must not be less than 80% of the mean compressive strength.

Table C80.2: Group factors

Anchor rod			M6	M8	M6	M8	-		M8	M10	M8	M10	-		M12	M16	M12	M16	M12	M16
Internal threaded anchor UPM-I			-		-		M6	M8	-		-		M10	M12	-		-		-	
							11x85						15x85							
Perforated sleeve UPM SH K			12x50		12x85		16x85				16x130		20x85				20x130		20x200	
Group factors	$\alpha_{g,N}$ (s_{min} ∥)	[-]	1,3																	
	$\alpha_{g,V}$ (s_{min} ∥)		1,3																	
	$\alpha_{g,N}$ (s_{min} ⊥)		0,8																	
	$\alpha_{g,V}$ (s_{min} ⊥)		1,3																	

Upat injection system UPM 44 for masonry

Performance
Vertical perforated brick HLz, Porotherm W 44, filled with mineral wool; dimensions, installation parameters, Group factors

Annex C80

Vertical perforated brick HLz, Porotherm W 44, filled with mineral wool, EN 771-1:2011+A1:2015

Table C81.1: Installation parameters
(Push through installation with perforated sleeve UPM SH K)

Anchor rod			**M10**	**M12**	**M16**
Perforated sleeve UPM SH K			**18x130/200**		**22x130/200**
Anchor rod with perforated sleeve UPM SH K					
Max. installation torque	max T_{inst}	[Nm]	5	6	
General installation parameters					
Edge distance	$c_{min} = c_{cr}$	[mm]	60		
Spacing	s_{min} II		80		
	s_{cr} II		250		
	s_{min} ⊥		80		
	s_{cr} ⊥		250		
Drilling method					
Rotary drilling with carbide drill					

Table C81.2: Group factors

Anchor rod			**M10**	**M12**	**M16**
Perforated sleeve UPM SH K			**18x130/200**		**22x130/200**
Group factors	$\alpha_{g,N}$ (s_{min} II)	[-]	1,3		
	$\alpha_{g,V}$ (s_{min} II)		1,3		
	$\alpha_{g,N}$ (s_{min} ⊥)		0,8		
	$\alpha_{g,V}$ (s_{min} ⊥)		1,3		

Vertical perforated brick HLz, Porotherm W 44, filled with mineral wool, EN 771-1:2011+A1:2015

Table C82.1: Characteristic resistance to pull-out failure or brick breakout failure of a single anchor under tension loading (Pre-positioned installation)

Anchor rod		M6	M8	M6	M8	-	M8	M10	M8	M10	-	M12	M16	M12	M16	M12	M16
Internal threaded anchor UPM-I		-		-		M6 M8 11x85	-		-		M10 M12 15x85	-		-		-	
Perforated sleeve UPM SH K		12x50		12x85		16x85			16x130		20x85			20x130		20x200	
$N_{Rk} = N_{Rk,p} = N_{Rk,b} = N_{Rk,p,c} = N_{Rk,b,c}$ [kN]; temperature range 50/80°C [2)]																	
Mean compressive strength / Min. compressive strength single brick [1)]	Use conditions																
8 / 6 N/mm²	w/w w/d	0,75		1,50		1,20			1,50							2,50	
	d/d	0,90		1,50		1,20			1,50							2,50	
10 / 8 N/mm²	w/w w/d	0,90		1,50		1,20			1,50							2,50	
	d/d	0,90		2,00		1,50			2,00							3,00	
12,5 / 10 N/mm²	w/w w/d	0,90		2,00		1,50			2,00							3,00	
	d/d	1,20		2,00		1,50			2,00							3,50	

[1)] The minimum compressive strength of the single brick must not be less than 80% of the mean compressive strength.
[2)] For temperature range 72/120°C: $N_{Rk\,(72/120°C)} = 0{,}83 \cdot N_{Rk\,(50/80°C)}$.

Table C82.2: Characteristic resistance to pull-out failure or brick breakout failure of a single anchor under tension loading (Push through installation)

Anchor rod		**M10**	**M12**	**M16**
Perforated sleeve UPM SH K		**18x130/200**		**22x130/200**
$N_{Rk} = N_{Rk,p} = N_{Rk,b} = N_{Rk,p,c} = N_{Rk,b,c}$ [kN]; temperature range 50/80°C [2)]				
Mean compressive strength / Min. compressive strength single brick [1)]	Use conditions			
8 / 6 N/mm²	w/w w/d	1,5		
	d/d	1,5		
10 / 8 N/mm²	w/w w/d	1,5		
	d/d	2,0		
12,5 / 10 N/mm²	w/w w/d	2,0		
	d/d	2,0		

[1)] The minimum compressive strength of the single brick must not be less than 80% of the mean compressive strength.
[2)] For temperature range 72/120°C: $N_{Rk\,(72/120°C)} = 0{,}83 \cdot N_{Rk\,(50/80°C)}$.

Factor for job site tests and displacements see annex C123.

Vertical perforated brick HLz, Porotherm W 44, filled with mineral wool, EN 771-1:2011+A1:2015

Table C83.1: Characteristic resistance to local brick failure or brick edge failure of a single anchor under shear loading (Pre-positioned installation)

Anchor rod	M6 M8	M6 M8	-	M8 M10	M8 M10	-	M12 M16	M12 M16	M12 M16
Internal threaded anchor UPM-I	-	-	M6 M8 / 11x85	-	-	M10 M12 / 15x85	-	-	-
Perforated sleeve UPM SH K	12x50	12x85	16x85		16x130	20x85		20x130	20x200

$V_{Rk} = V_{Rk,b} = V_{Rk,c,II} = V_{Rk,c,\perp}$ [kN]; temperature range 50/80°C and 72/120°C

Mean compressive strength / Min. compressive strength single brick [1]	Use conditions					
8 / 6 N/mm²	w/w w/d / d/d	0,9		1,2	0,9	1,2	1,2
10 / 8 N/mm²	w/w w/d / d/d	0,9		1,5	0,9	1,5	1,2
12,5 / 10 N/mm²	w/w w/d / d/d	1,2		1,5	1,2	1,5	1,5

[1] The minimum compressive strength of the single brick must not be less than 80% of the mean compressive strength.

Table C83.2: Characteristic resistance to local brick failure or brick edge failure of a single anchor under shear loading (Push through installation)

Anchor rod	**M10**	**M12**	**M16**
Perforated sleeve UPM SH K	**18x130/200**		**22x130/200**

$V_{Rk} = V_{Rk,b} = V_{Rk,c,II} = V_{Rk,c,\perp}$ [kN]; temperature range 50/80°C and 72/120°C

Mean compressive strength / Min. compressive strength single brick [1]	Use conditions			
8 / 6 N/mm²	w/w w/d / d/d	1,2		1,2
10 / 8 N/mm²	w/w w/d / d/d	1,5		1,5
12,5 / 10 N/mm²	w/w w/d / d/d	1,5		1,5

[1] The minimum compressive strength of the single brick must not be less than 80% of the mean compressive strength.

Factor for job site tests and displacements see annex C123.

Vertical perforated brick HLz, EN 771-1:2011+A1:2015

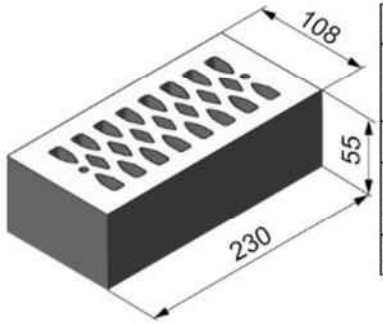

Producer		e.g. Wienerberger.		
Nominal dimensions	[mm]	length L	width W	height H
		230	108	55
Mean gross dry density ρ	[kg/dm³]	≥ 1,4		
Mean compressive strength / Min. compressive strength single brick [1]	[N/mm²]	2,5 / 2 or 5 / 4 or 8 / 6 or 10 / 8		
Standard or annex		EN 771-1:2011+A1:2015		

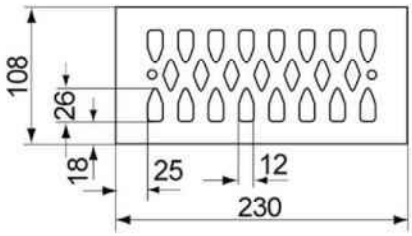

Dimension see also Annex B18

Table C84.1: Installation parameters

Anchor rod	M6	M8	M6	M8	-		M8	M10	-		M12	M16
Internal threaded anchor UPM-I	-		-		M6	M8	-		M10	M12	-	
					11x85				15x85			
Perforated sleeve UPM SH K	12x50		12x85		16x85				20x85			

Anchor rod and internal threaded anchor UPM-I with perforated sleeve UPM SH K			
Max. installation torque	max T_{inst}	[Nm]	2

General installation parameters			
Edge distance	$c_{min} = c_{cr}$	[mm]	60
Spacing	s_{min} ∥		80
	s_{cr} ∥		230
	s_{min} ⊥		60
	s_{cr} ⊥		60

Drilling method
Hammer drilling with hard metal hammer drill

[1] The minimum compressive strength of the single brick must not be less than 80% of the mean compressive strength.

Table C84.2: Group factors

Anchor rod	M6	M8	M6	M8	-		M8	M10	-		M12	M16
Internal threaded anchor UPM-I	-		-		M6	M8	-		M10	M12	-	
					11x85				15x85			
Perforated sleeve UPM SH K	12x50		12x85		16x85				20x85			

Group factors	$\alpha_{g,N}$ (s_{min} ∥)	[-]	2
	$\alpha_{g,V}$ (s_{min} ∥)		
	$\alpha_{g,N}$ (s_{min} ⊥)		
	$\alpha_{g,V}$ (s_{min} ⊥)		

Upat injection system UPM 44 for masonry

Performance
Vertical perforated brick HLz, dimensions, installation parameters, Group factors

Annex C84
Appendix 113 / 153

Vertical perforated brick HLz, EN 771-1:2011+A1:2015

Table C85.1: Characteristic resistance to pull-out failure or brick breakout failure of a single anchor under tension loading [1)]

Anchor rod		M6	M8	M6	M8	-		M8	M10	-		M12	M16
Internal threaded anchor UPM-I		-		-		M6	M8	-		M10	M12	-	
						11x85				15x85			
Perforated sleeve UPM SH K		12x50		12x85		16x85				20x85			
$N_{Rk} = N_{Rk,p} = N_{Rk,b} = N_{Rk,p,c} = N_{Rk,b,c}$ [kN]; temperature range 50/80°C [3)]													
Mean compressive strength / Min. compressive strength single brick [2)]	Use conditions												
2,5 / 2 N/mm²	w/w w/d	0,30		0,90		0,75				0,50			
	d/d	0,30		0,90		0,90				0,60			
5 / 4 N/mm²	w/w w/d	0,60		1,50		1,50				0,90			
	d/d	0,75		2,00		1,50				1,20			
8 / 6 N/mm²	w/w w/d	0,90		2,50		2,50				1,50			
	d/d	0,90		3,00		2,50				1,50			
10 / 8 N/mm²	w/w w/d	1,20		3,50		3,00				2,00			
	d/d	1,50		4,00		3,50				2,50			

[1)] If the fixing is in a solid area, for use condition w/w, the characteristic value shall be reduced with the factor 0,64.

[2)] The minimum compressive strength of the single brick must not be less than 80% of the mean compressive strength.

[3)] For temperature range 72/120°C: $N_{Rk\ (72/120°C)} = 0{,}83 \cdot N_{Rk\ (50/80°C)}$.

Table C85.2: Characteristic resistance to local brick failure or brick edge failure of a single anchor under shear loading

Anchor rod		M6	M8	M6	M8	-		M8	M10	-		M12	M16
Internal threaded anchor UPM-I		-		-		M6	M8	-		M10	M12	-	
						11x85				15x85			
Perforated sleeve UPM SH K		12x50		12x85		16x85				20x85			
$V_{Rk} = V_{Rk,b} = V_{Rk,c,II} = V_{Rk,c,\perp}$ [kN]; temperature range 50/80°C and 72/120°C													
Mean compressive strength / Min. compressive strength single brick [1)]	Use conditions												
2,5 / 2 N/mm²	w/w w/d	0,6								0,4			
	d/d												
5 / 4 N/mm²	w/w w/d	1,2								0,9			
	d/d												
8 / 6 N/mm²	w/w w/d	1,5								1,2			
	d/d												
10 / 8 N/mm²	w/w w/d	2,5								1,5			
	d/d												

[1)] The minimum compressive strength of the single brick must not be less than 80% of the mean compressive strength. Factor for job site tests and displacements see annex C123.

Vertical perforated brick HLz filled with mineral wool, EN 771-1:2011+A1:2015

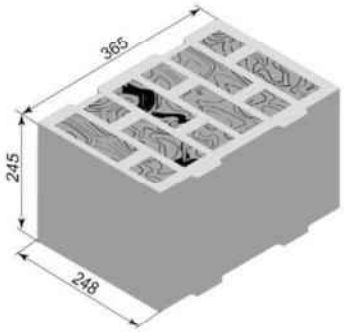

Producer		e.g. Wienerberger		
Nominal dimensions	[mm]	length L	width W	height H
		≥ 365	≥ 248	≥ 245
Mean gross dry density ρ	[kg/dm³]	0,6		
Mean compressive strength / Min. compressive strength single brick [1]	[N/mm²]	10 / 8		
Standard or annex		EN 771-1:2011+A1:2015		

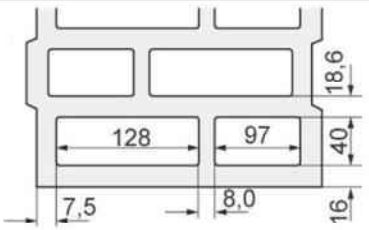

Dimension see also Annex B19

Table C86.1: Installation parameters
(Pre-positioned installation with perforated sleeve UPM SH K)

Anchor rod	**M6**	**M8**	**-**		**M8**	**M10**	**M8**	**M10**	**-**		**M12**	**M16**	**M12**	**M16**
Internal threaded anchor UPM-I	**-**		**M6**	**M8**	**-**		**-**		**M10**	**M12**	**-**		**-**	
			11x85						**15x85**					
Perforated sleeve UPM SH K	**12x85**		**16x85**				**16x130**		**20x85**				**20x130**	
Anchor rod and internal threaded anchor UPM-I with perforated sleeve UPM SH K														
Max. installation torque $\max T_{inst}$	[Nm]	2	4											
General installation parameters														
Edge distance $c_{min} = c_{cr}$	[mm]	100												
Spacing s_{min} II		250												
Spacing s_{cr} II														
Spacing $s_{min} \perp$		245												
Spacing $s_{cr} \perp$														
Drilling method														
Hammer drilling with hard metal hammer drill														

[1] The minimum compressive strength of the single brick must not be less than 80% of the mean compressive strength.

Table C86.2: Group factors

Anchor rod	**M6**	**M8**	**M8**	**M10**	**M8**	**M10**	**M12**	**M16**	**M12**	**M16**
Perforated sleeve UPM SH K	**12x85**		**16x85**		**16x130**		**20x85**		**20x130**	
Group factors $\frac{\alpha_{g,N}(s_{min}\ II) = \alpha_{g,V}(s_{min}\ II)}{\alpha_{g,N}(s_{min} \perp) = \alpha_{g,V}(s_{min} \perp)}$	[-]	2								

Upat injection system UPM 44 for masonry

Performance
Vertical perforated brick HLz filled with mineral wool, dimensions, installation parameters, Group factors

Annex C86
Appendix 115 / 153

Vertical perforated brick HLz filled with mineral wool, EN 771-1:2011+A1:2015

Table C87.1: Installation parameters
(Push through installation with perforated sleeve UPM SH K)

Anchor rod			**M10**	**M12**	**M16**
Perforated sleeve UPM SH K			**18x130/200**		**22x130/200**
Anchor rod with perforated sleeve UPM SH K					
Max. installation torque	$\max T_{inst}$	[Nm]	4		
General installation parameters					
Edge distance	$c_{min} = c_{cr}$	[mm]	100		
Spacing	s_{min} ∥	[mm]	250		
	s_{cr} ∥	[mm]			
	s_{min} ⊥	[mm]	245		
	s_{cr} ⊥	[mm]			
Drilling method					
Hammer drilling with hard metal hammer drill					

Table C87.2: Group factors

Anchor rod			**M10**	**M12**	**M16**
Perforated sleeve UPM SH K			**18x130/200**		**22x130/200**
Group factors	$\alpha_{g,N}$ (s_{min} ∥)	[-]	2		
	$\alpha_{g,V}$ (s_{min} ∥)	[-]			
	$\alpha_{g,N}$ (s_{min} ⊥)	[-]			
	$\alpha_{g,V}$ (s_{min} ⊥)	[-]			

Vertical perforated brick HLz filled with mineral wool, EN 771-1:2011+A1:2015

Table C88.1: Characteristic resistance to pull-out failure or brick breakout failure of a single anchor under tension loading (Pre-positioned installation)

Anchor rod		M6	M8	-		M8	M10	M8	M10	-		M12	M16	M12	M16	M12	M16
Internal threaded anchor UPM-I		-		M6	M8	-		-		M10	M12	-		-		-	
				11x85						15x85							
Perforated sleeve UPM SH K		12x85		16x85				16x130		20x85				20x130		20x200	
$N_{Rk} = N_{Rk,p} = N_{Rk,b} = N_{Rk,p,c} = N_{Rk,b,c}$ [kN]; temperature range 50/80°C [2]																	
Mean compressive strength / Min. compressive strength single brick [1]	Use conditions																
10 / 8 N/mm²	w/w	2,0		1,5		2,5				2,0				2,0		3,0	
	d/d	2,0		2,0		3,0				2,0				2,0		3,0	

[1] The minimum compressive strength of the single brick must not be less than 80% of the mean compressive strength.
[2] For temperature range 72/120°C no performance assessed.

Table C88.2: Characteristic resistance to pull-out failure or brick breakout failure of a single anchor under tension loading (Push through installation)

Anchor rod		M10	M12	M16
Perforated sleeve UPM SH K		18x130/200		22x130/200
$N_{Rk} = N_{Rk,p} = N_{Rk,b} = N_{Rk,p,c} = N_{Rk,b,c}$ [kN]; temperature range 50/80°C [2]				
Mean compressive strength / Min. compressive strength single brick [1]	Use conditions			
10 / 8 N/mm²	w/w	1.5		2.0
	d/d	2,0		2,0

[1] The minimum compressive strength of the single brick must not be less than 80% of the mean compressive strength.
[2] For temperature range 72/120°C no performance assessed.

Factor for job site tests and displacements see annex C123.

Vertical perforated brick HLz filled with mineral wool, EN 771-1:2011+A1:2015

Table C89.1: Characteristic resistance to local brick failure or brick edge failure of a single anchor under shear loading (Pre-positioned installation)

Anchor rod		**M6**	**M8**	**-**		**M8**	**M10**	**M8**	**M10**	**-**		**M12**	**M16**	**M12**	**M16**	**M12**	**M16**
Internal threaded anchor UPM-I		**-**		**M6**	**M8**	**-**		**-**		**M10**	**M12**	**-**		**-**		**-**	
				11x85						**15x85**							
Perforated sleeve UPM SH K		**12x85**		**16x85**				**16x130**		**20x85**				**20x130**		**20x200**	
$V_{Rk} = V_{Rk,b} = V_{Rk,c,II} = V_{Rk,c,\perp}$ [kN]; temperature range 50/80°C [2)]																	
Mean compressive strength / Min. compressive strength single brick [1)]	Use conditions																
10 / 8 N/mm²	w/w	2,5	3,0	3,0				3,0		1,5				1,5		1,5	1,5
	d/d	2,5	3,0	3,0				3,0		1,5				1,5		1,5	1,5

[1)] The minimum compressive strength of the single brick must not be less than 80% of the mean compressive strength.
[2)] For temperature range 72/120°C no performance assessed.

Table C89.2: Characteristic resistance to local brick failure or brick edge failure of a single anchor under shear loading (Push through installation)

Anchor rod		**M10**	**M12**	**M16**
Perforated sleeve UPM SH K		**18x130/200**		**22x130/200**
$V_{Rk} = V_{Rk,b} = V_{Rk,c,II} = V_{Rk,c,\perp}$ [kN]; temperature range 50/80°C [2)]				
Mean compressive strength / Min. compressive strength single brick [1)]	Use conditions			
10 / 8 N/mm²	w/w	3,0		1,5
	d/d	3,0		1,5

[1)] The minimum compressive strength of the single brick must not be less than 80% of the mean compressive strength.
[2)] For temperature range 72/120°C no performance assessed.

Factor for job site tests and displacements see annex C123.

Vertical perforated brick HLz, EN 771-1:2011+A1:2015

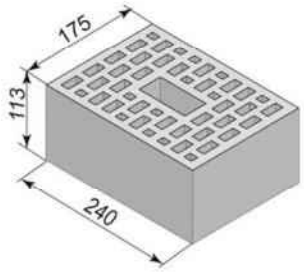

Producer		e.g. Wienerberger		
Nominal dimensions	[mm]	length L	width W	height H
		≥ 240	≥ 175	≥ 113
Mean gross dry density ρ	[kg/dm³]	0,9		
Mean compressive strength / Min. compressive strength single brick [1]	[N/mm²]	12,5 / 10		
Standard or annex		EN 771-1:2011+A1:2015		

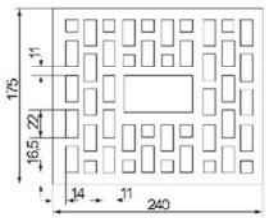

Dimension see also Annex B19

Table C90.1: Installation parameters
(Pre-positioned installation with perforated sleeve UPM SH K)

Anchor rod	**M6**	**M8**	**-**	**M8**	**M10**	**M8**	**M10**	**-**	**M12**	**M16**	**M12**	**M16**
Internal threaded anchor UPM-I	**-**		**M6** / **11x85**	**M8**	**-**	**-**		**M10** / **15x85**	**M12**	**-**	**-**	
Perforated sleeve UPM SH K	**12x85**		**16x85**			**16x130**		**20x85**			**20x130**	

Anchor rod and internal threaded anchor UPM-I with perforated sleeve UPM SH K				
Max. installation torque	max T_{inst}	[Nm]	2	4

General installation parameters			
Edge distance	$c_{min} = c_{cr}$	[mm]	100
Spacing	s_{min} ∥		240
	s_{cr} ∥		
	s_{min} ⊥		115
	s_{cr} ⊥		

Drilling method
Hammer drilling with hard metal hammer drill

[1] The minimum compressive strength of the single brick must not be less than 80% of the mean compressive strength.

Table C90.2: Group factors

Anchor rod	**M6**	**M8**	**M8**	**M10**	**M8**	**M10**	**M12**	**M16**	**M12**	**M16**
Perforated sleeve UPM SH K	**12x85**		**16x85**		**16x130**		**20x85**		**20x130**	

Group factors	$\alpha_{g,N}(s_{min}$ ∥$) = \alpha_{g,V}(s_{min}$ ∥$)$	[-]	2
	$\alpha_{g,N}(s_{min} \perp) = \alpha_{g,V}(s_{min} \perp)$		

Upat injection system UPM 44 for masonry

Performance
Vertical perforated brick HLz, dimensions, installation parameters, Group factors

Annex C90
Appendix 119 / 153

Vertical perforated brick HLz, EN 771-1:2011+A1:2015

Table C91.1: Installation parameters
(Push through installation with perforated sleeve UPM SH K)

Anchor rod			**M10**	**M12**	**M16**
Perforated sleeve UPM SH K			**18x130/200**		**22x130/200**
Anchor rod with perforated sleeve UPM SH K					
Max. installation torque	$\max T_{inst}$	[Nm]	4		
General installation parameters					
Edge distance	$c_{min} = c_{cr}$	[mm]	100		
Spacing	s_{min} ∥	[mm]	240		
	s_{cr} ∥	[mm]			
	s_{min} ⊥	[mm]	115		
	s_{cr} ⊥	[mm]			
Drilling method					
Hammer drilling with hard metal hammer drill					

Table C91.2: Group factors

Anchor rod			**M10**	**M12**	**M16**
Perforated sleeve UPM SH K			**18x130/200**		**22x130/200**
Group factors	$\alpha_{g,N}$ (s_{min} ∥)	[-]	2		
	$\alpha_{g,V}$ (s_{min} ∥)	[-]			
	$\alpha_{g,N}$ (s_{min} ⊥)	[-]			
	$\alpha_{g,V}$ (s_{min} ⊥)	[-]			

Vertical perforated brick HLz, EN 771-1:2011+A1:2015

Table C92.1: Characteristic resistance to pull-out failure or brick breakout failure of a single anchor under tension loading (Pre-positioned installation)

Anchor rod		**M6**	**M8**	**-**	**M8**	**M10**	**M8**	**M10**	**-**	**M12**	**M16**	**M12**	**M16**
Internal threaded anchor UPM-I		**-**		**M6** / **11x85**	**M8** / **11x85**	**-**	**-**		**M10** / **15x85**	**M12** / **15x85**	**-**	**-**	
Perforated sleeve UPM SH K		**12x85**		**16x85**			**16x130**		**20x85**			**20x130**	
$N_{Rk} = N_{Rk,p} = N_{Rk,b} = N_{Rk,p,c} = N_{Rk,b,c}$ [kN]; temperature range 50/80°C [2)]													
Mean compressive strength/ Min. compressive strength single brick [1)]	Use conditions												
12,5 / 10 N/mm²	w/w	3,5		4,0			4,5		4,5			4,0	
	d/d	4,0		4,5			5,0		5,0			4,0	

[1)] The minimum compressive strength of the single brick must not be less than 80% of the mean compressive strength.
[2)] For temperature range 72/120°C no performance assessed.

Table C92.2: Characteristic resistance to pull-out failure or brick breakout failure of a single anchor under tension loading (Push through installation)

Anchor rod		**M10**	**M12**	**M16**
Perforated sleeve UPM SH K		**18x130/200**		**22x130/200**
$N_{Rk} = N_{Rk,p} = N_{Rk,b} = N_{Rk,p,c} = N_{Rk,b,c}$ [kN]; temperature range 50/80°C [2)]				
Mean compressive strength/ Min. compressive strength single brick [1)]	Use conditions			
12,5 / 10 N/mm²	w/w	4,5		4,0
	d/d	5,0		4,0

[1)] The minimum compressive strength of the single brick must not be less than 80% of the mean compressive strength.
[2)] For temperature range 72/120°C no performance assessed.

Factor for job site tests and displacements see annex C123.

Vertical perforated brick HLz, EN 771-1:2011+A1:2015

Table C93.1: Characteristic resistance to local brick failure or brick edge failure of a single anchor under shear loading (Pre-positioned installation)

Anchor rod		**M6**	**M8**	**-**		**M8**	**M10**	**M8**	**M10**	**-**		**M12**	**M16**	**M12**	**M16**
Internal threaded anchor UPM-I		**-**		**M6**	**M8**	**-**		**-**		**M10**	**M12**	**-**		**-**	
				11x85						**15x85**					
Perforated sleeve UPM SH K		**12x85**		**16x85**				**16x130**		**20x85**				**20x130**	
$V_{Rk} = V_{Rk,b} = V_{Rk,c,II} = V_{Rk,c,\perp}$ [kN]; temperature range 50/80°C [2)]															
Mean compressive strength / Min. compressive strength single brick [1)]	Use con-ditions														
12,5 / 10 N/mm²	w/w	4,0	5,5	4,0	5,5	5,5	7,0	5,5	7,0	7,0	6,0	6,0	8,0	6,0	8,0
	d/d	4,0	5,5	4,0	5,5	5,5	7,0	5,5	7,0	7,0	6,0	6,0	8,0	6,0	8,0

[1)] The minimum compressive strength of the single brick must not be less than 80% of the mean compressive strength.
[2)] For temperature range 72/120°C no performance assessed.

Table C93.2: Characteristic resistance to local brick failure or brick edge failure of a single anchor under shear loading (Push through installation)

Anchor rod		**M10**	**M12**	**M16**
Perforated sleeve UPM SH K		**18x130/200**		**22x130/200**
$V_{Rk} = V_{Rk,b} = V_{Rk,c,II} = V_{Rk,c,\perp}$ [kN]; temperature range 50/80°C [2)]				
Mean compressive strength / Min. compressive strength single brick [1)]	Use con-ditions			
12,5 / 10 N/mm²	w/w	7,0	6,0	8,0
	d/d	7,0	6,0	8,0

[1)] The minimum compressive strength of the single brick must not be less than 80% of the mean compressive strength.
[2)] For temperature range 72/120°C no performance assessed.

Factor for job site tests and displacements see annex C123

Horizontal perforated brick LLz, EN 771-1:2011+A1:2015

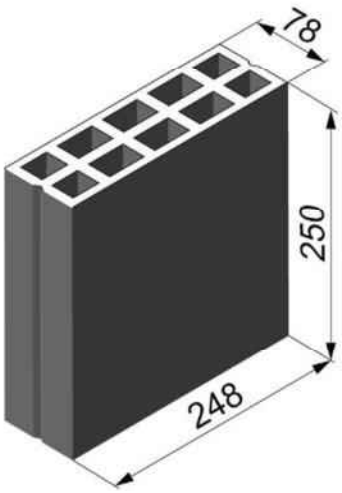

Producer		-		
Nominal dimensions	[mm]	length L	width W	height H
		250	78	248
Mean gross dry density ρ	[kg/dm³]	≥ 0,7		
Mean compressive strength / Min. compressive strength single brick [1)]	[N/mm²]	2,5 / 2 or 5 / 4 or 8 / 6		
Standard or annex		EN 771-1:2011+A1:2015		

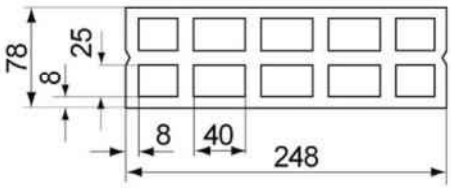

Dimension see also Annex B19

Table C94.1: Installation parameters

Anchor rod			M6	M8
Perforated sleeve UPM SH K			12x50	
Anchor rod with perforated sleeve UPM SH K				
Max. installation torque	max T_{inst}	[Nm]	2	
General installation parameters				
Edge distance	$c_{min} = c_{cr}$	[mm]	100	
Spacing	s_{min} ∥		75	
	s_{cr} ∥		250	
	$s_{min} \perp = s_{cr} \perp$		250	
Drilling method				
Hammer drilling with hard metal hammer drill				

[1)] The minimum compressive strength of the single brick must not be less than 80% of the mean compressive strength.

Table C94.2: Group factors

Anchor rod			M6	M8
Perforated sleeve UPM SH K			12x50	
Group factors	$\alpha_{g,N}$ (s_{min} ∥)	[-]	1,6	
	$\alpha_{g,V}$ (s_{min} ∥)		1,1	
	$\alpha_{g,N}$ ($s_{min} \perp$)		2,0	
	$\alpha_{g,V}$ ($s_{min} \perp$)			

Horizontal perforated brick LLz, EN 771-1:2011+A1:2015

Table C95.1: Characteristic resistance to pull-out failure or brick breakout failure of a single anchor under tension loading

Anchor rod		**M6**	**M8**
Perforated sleeve UPM SH K		**12x50**	
$N_{Rk} = N_{Rk,p} = N_{Rk,b} = N_{Rk,p,c} = N_{Rk,b,c}$ [kN]; temperature range 50/80°C [2)]			
Mean compressive strength / Min. compressive strength single brick [1)]	Use conditions		
2,5 / 2 N/mm²	w/w w/d	0,5	
	d/d	0,6	
5 / 4 N/mm²	w/w w/d	0,9	
	d/d	1,2	
8 / 6 N/mm²	w/w w/d	1,5	
	d/d	1,5	

[1)] The minimum compressive strength of the single brick must not be less than 80% of the mean compressive strength..

[2)] For temperature range 72/120°C: $N_{Rk\,(72/120°C)} = 0{,}83 \cdot N_{Rk\,(50/80°C)}$.

Table C95.2: Characteristic resistance to local brick failure or brick edge failure of a single anchor under shear loading

Anchor rod		**M6**	**M8**
Perforated sleeve UPM SH K		**12x50**	
$V_{Rk} = V_{Rk,b} = V_{Rk,c,II} = V_{Rk,c,\perp}$ [kN]; temperature range 50/80°C and 72/120°C			
Mean compressive strength / Min. compressive strength single brick [1)]	Use conditions		
2,5 / 2 N/mm²	w/w w/d	0,5	
	d/d		
5 / 4 N/mm²	w/w w/d	0,9	
	d/d		
8 / 6 N/mm²	w/w w/d	1,5	
	d/d		

[1)] The minimum compressive strength of the single brick must not be less than 80% of the mean compressive strength.

Factor for job site tests and displacements see annex C123.

Horizontal perforated brick LLz, EN 771-1:2011+A1:2015

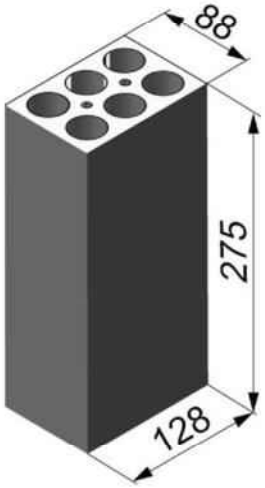

Producer		e.g. Cermanica Farreny S.A.		
Nominal dimensions	[mm]	length L	width W	height H
		275	88	128
Mean gross dry density ρ	[kg/dm³]	≥ 0,8		
Mean compressive strength / Min. compressive strength single brick [1)]	[N/mm²]	2,5 / 2		
Standard or annex		EN 771-1:2011+A1:2015		

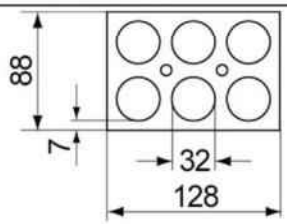

Dimension see also Annex B19

Table C96.1: Installation parameters

Anchor rod			**M6**	**M8**
Perforated sleeve UPM SH K			**12x50**	
Anchor rod with perforated sleeve UPM SH K				
Max. installation torque	T_{inst}	[Nm]	2	
General installation parameters				
Edge distance	$c_{min} = c_{cr}$	[mm]	60	
Spacing	s_{min} ∥		75	
	s_{cr} ∥		275	
	s_{min} ⊥		75	
	s_{cr} ⊥		130	
Drilling method				
Hammer drilling with hard metal hammer drill				

[1)] The minimum compressive strength of the single brick must not be less than 80% of the mean compressive strength.

Table C96.2: Group factors

Anchor rod			**M6**	**M8**
Perforated sleeve UPM SH K			**12x50**	
Group factors	$\alpha_{g,N}$ (s_{min} ∥)	[-]	1,3	
	$\alpha_{g,V}$ (s_{min} ∥)		1,5	
	$\alpha_{g,N}$ (s_{min} ⊥)		1,3	
	$\alpha_{g,V}$ (s_{min} ⊥)		1,5	

Horizontal perforated brick LLz, EN 771-1:2011+A1:2015

Table C97.1: Characteristic resistance to pull-out failure or brick breakout failure of a single anchor under tension loading

Anchor rod		**M6**	**M8**
Perforated sleeve UPM SH K		**12x50**	
$N_{Rk} = N_{Rk,p} = N_{Rk,b} = N_{Rk,p,c} = N_{Rk,b,c}$ [kN]; temperature range 50/80°C [2)]			
Mean compressive strength / Min. compressive strength single brick [1)]	Use conditions		
2,5 / 2 N/mm²	w/w, w/d, d/d	1,5	

[1)] The minimum compressive strength of the single brick must not be less than 80% of the mean compressive strength.

[2)] For temperature range 72/120°C: $N_{Rk\ (72/120°C)} = 0{,}83 \cdot N_{Rk\ (50/80°C)}$.

Table C97.2: Characteristic resistance to local brick failure or brick edge failure of a single anchor under shear loading

Anchor rod		**M6**	**M8**
Perforated sleeve UPM SH K		**12x50**	
$V_{Rk} = V_{Rk,b} = V_{Rk,c,II} = V_{Rk,c,\perp}$ [kN]; temperature range 50/80°C and 72/120°C			
Mean compressive strength / Min. compressive strength single brick [1)]	Use conditions		
2,5 / 2 N/mm²	w/w, w/d, d/d	1,2	

[1)] The minimum compressive strength of the single brick must not be less than 80% of the mean compressive strength.

Factor for job site tests and displacements see annex C123.

Light-weight concrete hollow block Hbl, EN 771-3:2011+A1:2015

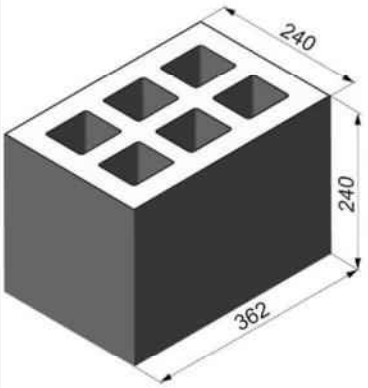

Producer		-		
Nominal dimensions	[mm]	length L	width W	height H
		362	240	240
Mean gross dry density ρ	[kg/dm³]	≥ 1,0		
Mean compressive strength / Min. compressive strength single brick [1]	[N/mm²]	2,5 / 2 or 5 / 4		
Standard or annex		EN 771-3:2011+A1:2015		

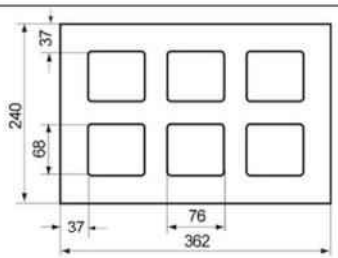

Dimension see also Annex B19

Table C98.1: Installation parameters
(Pre-positioned installation with perforated sleeve UPM SH K)

Anchor rod	M6	M8	M6	M8	-		M8	M10	M8	M10	-		M12	M16	M12	M16	M12	M16
Internal threaded anchor UPM-I	-		-		M6	M8	-		-		M10	M12	-		-		-	
					11x85						15x85							
Perforated sleeve UPM SH K	12x50		12x85		16x85				16x130		20x85				20x130		20x200	

Anchor rod and internal threaded anchor UPM-I with perforated sleeve UPM SH K			
Max. installation torque	max T_{inst}	[Nm]	2
General installation parameters			
Edge distance	$c_{min} = c_{cr}$	[mm]	60
Spacing	s_{min} ∥		100
	s_{cr} ∥		362
	$s_{min} \perp = s_{cr} \perp$		240
Drilling method			
Hammer drilling with hard metal hammer drill			

[1] The minimum compressive strength of the single brick must not be less than 80% of the mean compressive strength.

Table C98.2: Group factors

Anchor rod	M6	M8	M6	M8	-		M8	M10	M8	M10	-		M12	M16	M12	M16	M12	M16
Internal threaded anchor UPM-I	-		-		M6	M8	-		-		M10	M12	-		-		-	
					11x85						15x85							
Perforated sleeve UPM SH K	12x50		12x85		16x85				16x130		20x85				20x130		20x200	

Group factors	$\alpha_{g,N}$ (s_{min} ∥)	[-]	1,2
	$\alpha_{g,V}$ (s_{min} ∥)		1,1
	$\alpha_{g,N}$ ($s_{min} \perp$)		2,0
	$\alpha_{g,V}$ ($s_{min} \perp$)		

Upat injection system UPM 44 for masonry

Performance
Light-weight concrete hollow block Hbl, dimensions, installation parameters, Group factors

Annex C98
Appendix 127 / 153

Light-weight concrete hollow block Hbl, EN 771-3:2011+A1:2015

Table C99.1: Installation parameters
(Push through installation with perforated sleeve UPM SH K)

Anchor rod			**M10**	**M12**	**M16**
Perforated sleeve UPM SH K			**18x130/200**		**22x130/200**
Anchor rod with perforated sleeve UPM SH K					
Max. installation torque	max T_{inst}	[Nm]	2		
General installation parameters					
Edge distance	$c_{min} = c_{cr}$	[mm]	60		
Spacing	s_{min} ∥		100		
	s_{cr} ∥		362		
	$s_{min} \perp = s_{cr} \perp$		240		
Drilling method					
Hammer drilling with hard metal hammer drill					

Table C99.2: Group factors

Anchor rod			**M10**	**M12**	**M16**
Perforated sleeve UPM SH K			**18x130/200**		**22x130/200**
Group factors	$\alpha_{g,N}$ (s_{min} ∥)	[-]	1,2		
	$\alpha_{g,V}$ (s_{min} ∥)		1,1		
	$\alpha_{g,N}$ ($s_{min} \perp$)		2,0		
	$\alpha_{g,V}$ ($s_{min} \perp$)				

Light-weight concrete hollow block Hbl, EN 771-3:2011+A1:2015

Table C100.1: Characteristic resistance to pull-out failure or brick breakout failure of a single anchor under tension loading (Pre-positioned installation)

Anchor rod		M6	M8	M6	M8	-		M8	M10	M8	M10	-		M12	M16	M12	M16	M12	M16
Internal threaded anchor UPM-I		-		-		M6	M8	-		-		M10	M12	-		-		-	
						11x85						15x85							
Perforated sleeve UPM SH K		12x50		12x85		16x85				16x130		20x85				20x130		20x200	
$N_{Rk} = N_{Rk,p} = N_{Rk,b} = N_{Rk,p,c} = N_{Rk,b,c}$ [kN]; temperature range 50/80°C [2)]																			
Mean compressive strength / Min. compressive strength single brick [1)]	Use conditions																		
2,5 / 2 N/mm²	w/w w/d	1,2		1,5												2,5			
	d/d	1,2		1,5												2,5			
5 / 4 N/mm²	w/w w/d	2,0		3,0												5,0			
	d/d	2,5		3,0												5,5			

[1)] The minimum compressive strength of the single brick must not be less than 80% of the mean compressive strength.

[2)] For temperature range 72/120°C: $N_{Rk\ (72/120°C)} = 0{,}83 \cdot N_{Rk\ (50/80°C)}$.

Table C100.2: Characteristic resistance to pull-out failure or brick breakout failure of a single anchor under tension loading (Push through installation)

Anchor rod		**M10**	**M12**	**M16**
Perforated sleeve UPM SH K		**18x130/200**		**22x130/200**
$N_{Rk} = N_{Rk,p} = N_{Rk,b} = N_{Rk,p,c} = N_{Rk,b,c}$ [kN]; temperature range 50/80°C [2)]				
Mean compressive strength / Min. compressive strength single brick [1)]	Use conditions			
2,5 / 2 N/mm²	w/w w/d	1,5		
	d/d	1,5		
5 / 4 N/mm²	w/w w/d	3,0		
	d/d	3,0		

[1)] The minimum compressive strength of the single brick must not be less than 80% of the mean compressive strength.

[2)] For temperature range 72/120°C: $N_{Rk\ (72/120°C)} = 0{,}83 \cdot N_{Rk\ (50/80°C)}$.

Factor for job site tests and displacements see annex C123.

Light-weight concrete hollow block Hbl, EN 771-3:2011+A1:2015

Table C101.1: Characteristic resistance to local brick failure or brick edge failure of a single anchor under shear loading (Pre-positioned installation)

Anchor rod	M6	M8	M6	M8	-		M8	M10	M8	M10	-		M12	M16	M12	M16	M12	M16
Internal threaded anchor UPM-I	-		-		M6	M8	-		-		M10	M12	-		-		-	
					11x85						15x85							
Perforated sleeve UPM SH K	12x50		12x85		16x85				16x130		20x85				20x130		20x200	

$V_{Rk} = V_{Rk,b} = V_{Rk,c,II} = V_{Rk,c,\perp}$ [kN]; temperature range 50/80°C and 72/120°C		
Mean compressive strength / Min. compressive strength single brick [1]	Use conditions	
2,5 / 2 N/mm²	w/w w/d d/d	0,9
5 / 4 N/mm²	w/w w/d d/d	2,0

[1] The minimum compressive strength of the single brick must not be less than 80% of the mean compressive strength.

Table C101.2: Characteristic resistance to local brick failure or brick edge failure of a single anchor under shear loading (Push through installation)

Anchor rod	**M10**	**M12**	**M16**
Perforated sleeve UPM SH K	**18x130/200**		**22x130/200**

$V_{Rk} = V_{Rk,b} = V_{Rk,c,II} = V_{Rk,c,\perp}$ [kN]; temperature range 50/80°C and 72/120°C		
Mean compressive strength / Min. compressive strength single brick [1]	Use conditions	
2,5 / 2 N/mm²	w/w w/d d/d	0,9
5 / 4 N/mm²	w/w w/d d/d	2,0

[1] The minimum compressive strength of the single brick must not be less than 80% of the mean compressive strength.

Factor for job site tests and displacements see annex C123.

Light-weight concrete hollow block Hbl, EN 771-3:2011+A1:2015

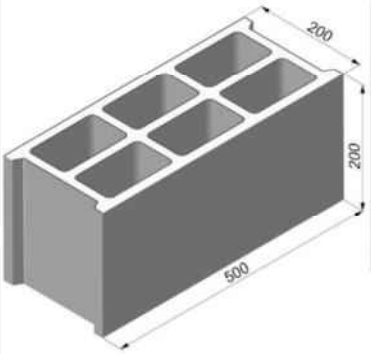

Producer		e.g. Sepa		
Nominal dimensions	[mm]	length L	width W	height H
		500	200	200
Mean gross dry density ρ	[kg/dm³]	≥ 1,0		
Mean compressive strength / Min. compressive strength single brick [1]	[N/mm²]	2,5 / 2 or 5 / 4 or 8 / 6		
Standard or annex		EN 771-1:2011+A1:2015		

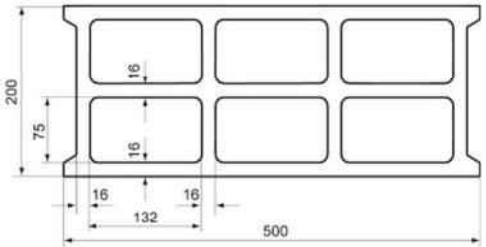

Dimension see also Annex B19

Table C102.1: Installation parameters

Anchor rod	M6	M8	M6	M8	-		M8	M10	M8	M10	M10	M12	-		M12	M16
Internal threaded anchor UPM-I	-		-		M6	M8	-		-		-		M10	M12	-	
					11x85								15x85			
Perforated sleeve UPM SH K	12x50		12x85		16x85				16x130		18x130/200		20x85			
Anchor rod and internal threaded anchor UPM-I with perforated sleeve UPM SH K																
Max. installation torque $\max T_{inst}$ [Nm]	1				2											
General installation parameters																
Edge distance $c_{min} = c_{cr}$ [mm]	100															
Spacing $s_{min} \parallel = s_{cr} \parallel$ [mm]	500															
Spacing $s_{min} \perp = s_{cr} \perp$ [mm]	200															
Drilling method																
Hammer drilling with hard metal hammer drill																

[1] The minimum compressive strength of the single brick must not be less than 80% of the mean compressive strength.

Table C102.2: Group factors

Anchor rod	M6	M8	M6	M8	-		M8	M10	M8	M10	M10	M12	-		M12	M16
Internal threaded anchor UPM-I	-		-		M6	M8	-		-		-		M10	M12	-	
					11x85								15x85			
Perforated sleeve UPM SH K	12x50		12x85		16x85				16x130		18x130/200		20x85			
Group factors $\alpha_{g,N}$ ($s_{min} \parallel$) [-]	2															
Group factors $\alpha_{g,V}$ ($s_{min} \parallel$) [-]	2															
Group factors $\alpha_{g,N}$ ($s_{min} \perp$) [-]	2															
Group factors $\alpha_{g,V}$ ($s_{min} \perp$) [-]	2															

Upat injection system UPM 44 for masonry

Performance
Light-weight concrete hollow block Hbl, dimensions, installation parameters, Group factors

Annex C102

Light-weight concrete hollow block Hbl, EN 771-3:2011+A1:2015

Table C103.1: Characteristic resistance to pull-out failure or brick breakout failure of a single anchor under tension loading

Anchor rod	**M6**	**M8**	**M6**	**M8**	**-**		**M8**	**M10**	**M8**	**M10**	**M10**	**M12**	**-**		**M12**	**M16**
Internal threaded anchor UPM-I	**-**		**-**		**M6**	**M8**	**-**		**-**		**-**		**M10**	**M12**	**-**	
					11x85								**15x85**			
Perforated sleeve UPM SH K	**12x50**		**12x85**		**16x85**				**16x130**		**18x130/200**		**20x85**			

$N_{Rk} = N_{Rk,p} = N_{Rk,b} = N_{Rk,p,c} = N_{Rk,b,c}$ [kN]; temperature range 50/80°C [2)]		
Mean compressive strength / Min. compressive strength single brick [1)]	use conditions	
2,5 / 2 N/mm²	w/w w/d	0,4
	d/d	0,5
5 / 4 N/mm²	w/w w/d	0,9
	d/d	0,9
8 / 6 N/mm²	w/w w/d	1,2
	d/d	1,5

[1)] The minimum compressive strength of the single brick must not be less than 80% of the mean compressive strength.

[2)] For temperature range 72/120°C: $N_{Rk\ (72/120°C)} = 0{,}83 \cdot N_{Rk\ (50/80°C)}$.

Table C103.2: Characteristic resistance to local brick failure or brick edge failure of a single anchor under shear loading

Anchor rod	**M6**	**M8**	**M6**	**M8**	**-**		**M8**	**M10**	**M8**	**M10**	**M10**	**M12**	**-**		**M12**	**M16**
Internal threaded anchor UPM-I	**-**		**-**		**M6**	**M8**	**-**		**-**		**-**		**M10**	**M12**	**-**	
					11x85								**15x85**			
Perforated sleeve UPM SH K	**12x50**		**12x85**		**16x85**				**16x130**		**18x130/200**		**20x85**			

$V_{Rk} = V_{Rk,b} = V_{Rk,c,II} = V_{Rk,c,\perp}$ [kN]; temperature range 50/80°C and 72/120°C		
Mean compressive strength / Min. compressive strength single brick [1)]	Use conditions	
2,5 / 2 N/mm²	w/w w/d	0,9
	d/d	
5 / 4 N/mm²	w/w w/d	1,5
	d/d	
8 / 6 N/mm²	w/w w/d	2,5
	d/d	

[1)] The minimum compressive strength of the single brick must not be less than 80% of the mean compressive strength.

Factor for job site tests and displacements see annex C123.

Light-weight concrete hollow block Hbl, EN 771-3:2011+A1:2015

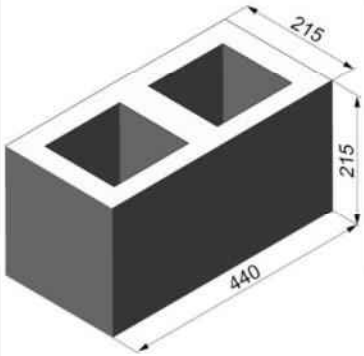

Producer		e.g. Roadstone wood		
Nominal dimensions	[mm]	length L	width W	height H
		440	215	215
Mean gross dry density ρ	[kg/dm³]	≥ 1,2		
Mean compressive strength / Min. compressive strength single brick [1]	[N/mm²]	5 / 4 or 8 / 6 or 10 / 8 or 12,5 / 10		
Standard or annex		EN 771-3:2011+A1:2015		

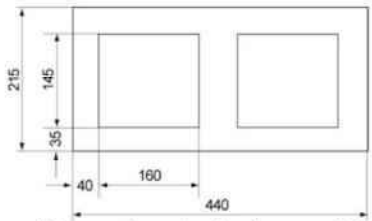

Dimension see also Annex B20

Table C104.1: Installation parameters
(Pre-positioned installation with perforated sleeve UPM SH K)

Anchor rod			**M6**	**M8**	**M6**	**M8**	**-**		**M8**	**M10**	**M8**	**M10**	**-**		**M12**	**M16**	**M12**	**M16**
Internal threaded anchor UPM-I			-		-		**M6**	**M8**	-		-		**M10**	**M12**	-		-	
							11x85						**15x85**					
Perforated sleeve UPM SH K			**12x50**		**12x85**		**16x85**				**16x130**		**20x85**				**20x130**	
Anchor rod and internal threaded anchor UPM-I with perforated sleeve UPM SH K																		
Max. installation torque	max T_{inst}	[Nm]	2															
General installation parameters																		
Edge distance	$c_{min} = c_{cr}$	[mm]	110															
Spacing	s_{min} ∥		100															
	s_{cr} ∥		440															
	s_{min} ⊥		100															
	s_{cr} ⊥		215															
Drilling method																		
Hammer drilling with hard metal hammer drill																		

[1] The minimum compressive strength of the single brick must not be less than 80% of the mean compressive strength.

Table C104.2: Group factors

Anchor rod			**M6**	**M8**	**M6**	**M8**	**-**		**M8**	**M10**	**M8**	**M10**	**-**		**M12**	**M16**	**M12**	**M16**
Internal threaded anchor UPM-I			-		-		**M6**	**M8**	-		-		**M10**	**M12**	-		-	
							11x85						**15x85**					
Perforated sleeve UPM SH K			**12x50**		**12x85**		**16x85**				**16x130**		**20x85**				**20x130**	
Group factors	$\alpha_{g,N}$ (s_{min} ∥)	[-]	1,4															
	$\alpha_{g,V}$ (s_{min} ∥)		2,0															
	$\alpha_{g,N}$ (s_{min} ⊥)		1,4															
	$\alpha_{g,V}$ (s_{min} ⊥)		1,2															

Upat injection system UPM 44 for masonry

Performance
Light-weight concrete hollow block Hbl, dimensions, installation parameters, Group factors

Annex C104

Light-weight concrete hollow block Hbl, EN 771-3:2011+A1:2015

Table C105.1: Installation parameters
(Push through installation with perforated sleeve UPM SH K)

Anchor rod			**M10**	**M12**	**M16**
Perforated sleeve UPM SH K			**18x130/200**		**22x130/200**
Anchor rod with perforated sleeve UPM SH K					
Max. installation torque	max T_{inst}	[Nm]	2		
General installation parameters					
Edge distance	$c_{min} = c_{cr}$	[mm]	110		
Spacing	s_{min} II		100		
	s_{cr} II		440		
	s_{min} ⊥		100		
	s_{cr} ⊥		215		
Drilling method					
Hammer drilling with hard metal hammer drill					

Table C105.2: Group factors

Anchor rod			**M10**	**M12**	**M16**
Perforated sleeve UPM SH K			**18x130/200**		**22x130/200**
Group factors	$\alpha_{g,N}$ (s_{min} II)	[-]	1,4		
	$\alpha_{g,V}$ (s_{min} II)		2,0		
	$\alpha_{g,N}$ (s_{min} ⊥)		1,4		
	$\alpha_{g,V}$ (s_{min} ⊥)		1,2		

Light-weight concrete hollow block Hbl, EN 771-3:2011+A1:2015

Table C106.1: Characteristic resistance to pull-out failure or brick breakout failure of a single anchor under tension loading (Pre-positioned installation)

Anchor rod	M6 M8	M6 M8	-	M8 M10	M8 M10	M10 M12	-	M12 M16
Internal threaded anchor UPM-I	-	-	M6 M8 11x85	-	-	-	M10 M12 15x85	-
Perforated sleeve UPM SH K	12x50	12x85	16x85		16x130	20x130/200	20x85	

$N_{Rk} = N_{Rk,p} = N_{Rk,b} = N_{Rk,p,c} = N_{Rk,b,c}$ [kN]; temperature range 50/80°C [2]				
Mean compressive strength / Min. comp. strength single brick [1]	Use conditions			
5 / 4 N/mm²	w/w w/d	0,9	1,2	2,0
	d/d	1,2	1,5	2,0
8 / 6 N/mm²	w/w w/d	1,5	2,0	3,0
	d/d	1,5	2,0	3,0
10 / 8 N/mm²	w/w w/d	2,0	2,5	3,5
	d/d	2,0	3,0	4,0
12,5 / 10 N/mm²	w/w w/d	2,5	3,0	4,5
	d/d	3,0	3,5	5,0

[1] The minimum compressive strength of the single brick must not be less than 80% of the mean compressive strength.
[2] For temperature range 72/120°C: $N_{Rk\,(72/120°C)} = 0{,}83 \cdot N_{Rk\,(50/80°C)}$.

Table C106.2: Characteristic resistance to pull-out failure or brick breakout failure of a single anchor under tension loading (Push through installation)

Anchor rod	M10	M12	M16
Perforated sleeve UPM SH K	18x130/200		22x130/200

$N_{Rk} = N_{Rk,p} = N_{Rk,b} = N_{Rk,p,c} = N_{Rk,b,c}$ [kN]; temperature range 50/80°C [2]			
Mean compressive strength / Min. comp. strength single brick [1]	Use conditions		
5 / 4 N/mm²	w/w w/d	1,2	2,0
	d/d	1,5	2,0
8 / 6 N/mm²	w/w w/d	2,0	3,0
	d/d	2,0	3,0
10 / 8 N/mm²	w/w w/d	2,5	3,5
	d/d	3,0	4,0
12,5 / 10 N/mm²	w/w w/d	3,0	4,5
	d/d	3,5	5,0

[1] The minimum compressive strength of the single brick must not be less than 80% of the mean compressive strength.
[2] For temperature range 72/120°C: $N_{Rk\,(72/120°C)} = 0{,}83 \cdot N_{Rk\,(50/80°C)}$.

Factor for job site tests and displacements see annex C123.

Light-weight concrete hollow block Hbl, EN 771-3:2011+A1:2015

Table C107.1: Characteristic resistance to local brick failure or brick edge failure of a single anchor under shear loading (Pre-positioned installation)

Anchor rod	M6	M8	M6	M8	-	M8	M10	M8	M10	-	M12	M16	M12	M16
Internal threaded anchor UPM-I	-		-		M6 / M8 11x85	-		-		M10 / M12 15x85	-		-	
Perforated sleeve UPM SH K	12x50		12x85		16x85			16x130		20x85			20x130	

$V_{Rk} = V_{Rk,b} = V_{Rk,c,II} = V_{Rk,c,\perp}$ [kN]; temperature range 50/80°C and 72/120°C

Mean compressive strength / Min. compressive strength single brick [1]	Use conditions							
5 / 4 N/mm²	w/w | w/d / d/d	0,75	1,20	0,75	1,20	0,75	1,20	
8 / 6 N/mm²	w/w | w/d / d/d	1,20	2,00	1,20	2,00	1,20	2,00	
10 / 8 N/mm²	w/w | w/d / d/d	1,50	2,50	1,50	2,50	1,50	2,50	
12,5 / 10 N/mm²	w/w | w/d / d/d	2,00	3,00	2,00	3,00	2,00	3,00	

[1] The minimum compressive strength of the single brick must not be less than 80% of the mean compressive strength.

Table C107.2: Characteristic resistance to local brick failure or brick edge failure of a single anchor under shear loading (Push through installation)

Anchor rod	M10	M12	M16
Perforated sleeve UPM SH K	18x130/200		22x130/200

$V_{Rk} = V_{Rk,b} = V_{Rk,c,II} = V_{Rk,c,\perp}$ [kN]; temperature range 50/80°C and 72/120°C

Mean compressive strength / Min. compressive strength single brick [1]	Use conditions	
5 / 4 N/mm²	w/w | w/d / d/d	1,2
8 / 6 N/mm²	w/w | w/d / d/d	2,0
10 / 8 N/mm²	w/w | w/d / d/d	2,5
12,5 / 10 N/mm²	w/w | w/d / d/d	3,0

[1] The minimum compressive strength of the single brick must not be less than 80% of the mean compressive strength.

Factor for job site tests and displacements see annex C123.

Light-weight concrete solid block Vbl, EN 771-3:2011+A1:2015

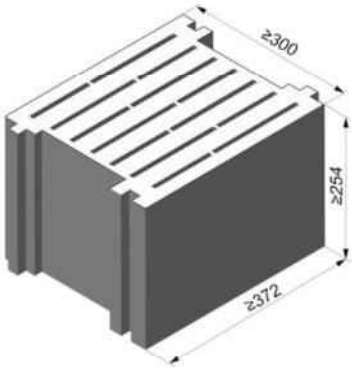

Producer		e.g. Sepa		
Nominal dimensions	[mm]	length L	width W	height H
		≥ 372	≥ 300	≥ 254
Mean gross dry density ρ	[kg/dm³]	≥ 0,6		
Mean compressive strength / Min. compressive strength single brick [1)]	[N/mm²]	2,5 / 2		
Standard or annex		EN 771-3:2011+A1:2015		

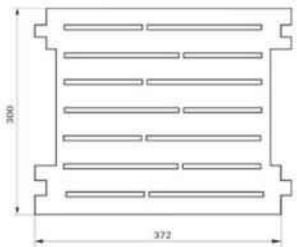

Dimension see also Annex B20

Table C108.1: Installation parameters

Anchor rod			**M8**	**M10**	**M10**	**M12**	**M12**	**M16**	**M16**	**M12**	**M16**
Perforated sleeve UPM SH K			**16x130**		**18x130/200**		**20x130**		**22x130/200**	**20x200**	
Anchor rod with perforated sleeve UPM SH K											
Max. installation torque	$\max T_{inst}$	[Nm]	4								
General installation parameters											
Edge distance	$c_{min} = c_{cr}$	[mm]	130								
Spacing	s_{min} II = s_{cr} II		370								
	$s_{min} \perp = s_{cr} \perp$		250								
Drilling method											
Hammer drilling with hard metal hammer drill											

[1)] The minimum compressive strength of the single brick must not be less than 80% of the mean compressive strength.

Table C108.2: Group factors

Anchor rod			**M8**	**M10**	**M10**	**M12**	**M12**	**M16**	**M16**	**M12**	**M16**
Perforated sleeve UPM SH K			**16x130**		**18x130/200**		**20x130**		**22x130/200**	**20x200**	
Group factors	$\alpha_{g,N}$ (s_{min} II)	[-]	2								
	$\alpha_{g,V}$ (s_{min} II)										
	$\alpha_{g,N}$ ($s_{min} \perp$)										
	$\alpha_{g,V}$ ($s_{min} \perp$)										

Light-weight concrete solid block Vbl, EN 771-3:2011+A1:2015

Table C109.1: Characteristic resistance to pull-out failure or brick breakout failure of a single anchor under tension loading

Anchor rod		**M8**	**M10**	**M10**	**M12**	**M12**	**M16**	**M16**	**M12**	**M16**
Perforated sleeve UPM SH K		**16x130**		**18x130/200**		**20x130**		**22x130/200**	**20x200**	
$N_{Rk} = N_{Rk,p} = N_{Rk,b} = N_{Rk,p,c} = N_{Rk,b,c}$ [kN]; temperature range 50/80°C [2)]										
Mean compressive strength / Min. compressive strength single brick [1)]	Use conditions									
2,5 / 2 N/mm²	w/w w/d	2,0				2,5			3,0	
	d/d	2,0				3,0			4,0	

[1)] The minimum compressive strength of the single brick must not be less than 80% of the mean compressive strength.

[2)] For temperature range 72/120°C: $N_{Rk\ (72/120°C)} = 0{,}83 \cdot N_{Rk\ (50/80°C)}$.

Table C109.2: Characteristic resistance to local brick failure or brick edge failure of a single anchor under shear loading

Anchor rod		**M8**	**M10**	**M10**	**M12**	**M12**	**M16**	**M16**	**M12**	**M16**
Perforated sleeve UPM SH K		**16x130**		**18x130/200**		**20x130**		**22x130/200**	**20x200**	
$V_{Rk} = V_{Rk,b} = V_{Rk,c,II} = V_{Rk,c,\perp}$ [kN]; temperature range 50/80°C and 72/120°C										
Mean compressive strength / Min. compressive strength single brick [1)]	Use conditions									
2,5 / 2 N/mm²	w/w w/d	4,5						6,5		
	d/d									

[1)] The minimum compressive strength of the single brick must not be less than 80% of the mean compressive strength.

Factor for job site tests and displacements see annex C123.

Light-weight concrete solid block Vbl, EN 771-3:2011+A1:2015

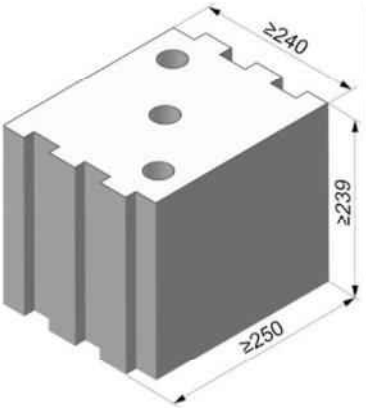

Producer		KLB		
Nominal dimensions	[mm]	length L	width W	height H
		≥ 250	≥ 240	≥ 239
Mean gross dry density ρ	[kg/dm³]	≥ 1,6		
Mean compressive strength / Min. compressive strength single brick [1]	[N/mm²]	5 / 4 or 8 / 6 or 10 / 8		
Standard or annex		EN 771-3:2011+A1:2015		

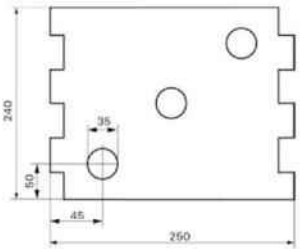

Dimension see also Annex B20

Table C110.1: Installation parameters
(Pre-positioned installation with perforated sleeve UPM SH K)

Anchor rod	**M6**	**M8**	**M6**	**M8**	**-**		**M8**	**M10**	**M8**	**M10**	**-**		**M12**	**M16**	**M12**	**M16**	**M12**	**M16**
Internal threaded anchor UPM-I	**-**		**-**		**M6**	**M8**	**-**		**-**		**M10**	**M12**	**-**		**-**		**-**	
					11x85						**15x85**							
Perforated sleeve UPM SH K	**12x50**		**12x85**		**16x85**				**16x130**		**20x85**				**20x130**		**20x200**	

Anchor rod and internal threaded anchor UPM-I with perforated sleeve UPM SH K			
Max. installation torque	max T_{inst}	[Nm]	4
General installation parameters			
Edge distance	$c_{min} = c_{cr}$	[mm]	130
Spacing	s_{min} II = s_{cr} II		250
	$s_{min} \perp = s_{cr} \perp$		250
Drilling method			
Hammer drilling with hard metal hammer drill			

[1] The minimum compressive strength of the single brick must not be less than 80% of the mean compressive strength.

Table C110.2: Group factors

Anchor rod	**M6**	**M8**	**M6**	**M8**	**-**		**M8**	**M10**	**M8**	**M10**	**-**		**M12**	**M16**	**M12**	**M16**	**M12**	**M16**
Internal threaded anchor UPM-I	**-**		**-**		**M6**	**M8**	**-**		**-**		**M10**	**M12**	**-**		**-**		**-**	
					11x85						**15x85**							
Perforated sleeve UPM SH K	**12x50**		**12x85**		**16x85**				**16x130**		**20x85**				**20x130**		**20x200**	

Group factors	$\alpha_{g,N}$ (s_{min} II)	[-]	2,0
	$\alpha_{g,V}$ (s_{min} II)		
	$\alpha_{g,N}$ ($s_{min} \perp$)		
	$\alpha_{g,V}$ ($s_{min} \perp$)		

Upat injection system UPM 44 for masonry

Performance
Light-weight concrete solid block Vbl, dimensions, installation parameters, Group factors

Annex C110
Appendix 139 / 153

Light-weight concrete solid block Vbl, EN 771-3:2011+A1:2015

Table C111.1: Installation parameters
(Push through installation with perforated sleeve UPM SH K)

Anchor rod			**M10**	**M12**	**M16**
Perforated sleeve UPM SH K			**18x130/200**		**22x130/200**
Anchor rod with perforated sleeve UPM SH K					
Max. installation torque	$\max T_{inst}$	[Nm]	2,0		
General installation parameters					
Edge distance	$c_{min} = c_{cr}$	[mm]	130		
Spacing	$s_{min} \parallel = s_{cr} \parallel$	[mm]	250		
	$s_{min} \perp = s_{cr} \perp$	[mm]	250		
Drilling method					
Hammer drilling with hard metal hammer drill					

Table C111.2: Group factors

Anchor rod			**M10**	**M12**	**M16**
Perforated sleeve UPM SH K			**18x130/200**		**22x130/200**
Group factors	$\alpha_{g,N}$ ($s_{min} \parallel$)	[-]	2,0		
	$\alpha_{g,V}$ ($s_{min} \parallel$)	[-]			
	$\alpha_{g,N}$ ($s_{min} \perp$)	[-]			
	$\alpha_{g,V}$ ($s_{min} \perp$)	[-]			

Light-weight concrete solid block Vbl, EN 771-3:2011+A1:2015

Table C112.1: Characteristic resistance to pull-out failure or brick breakout failure of a single anchor under tension loading (Pre-positioned installation)

Anchor rod		M6	M8	M6	M8	-		M8	M10	M8	M10	-		M12	M16	M12	M16	M12	M16
Internal threaded anchor UPM-I		-		-		M6	M8	-		-		M10	M12	-		-		-	
						11x85						15x85							
Perforated sleeve UPM SH K		12x50		12x85		16x85				16x130		20x85				20x130		20x200	
$N_{Rk} = N_{Rk,p} = N_{Rk,b} = N_{Rk,p,c} = N_{Rk,b,c}$ [kN]; temperature range 50/80°C [2)]																			
Mean compressive strength/ Min. compressive strength single brick [1)]	Use conditions																		
5 / 4 N/mm²	w/w w/d	1,2		2,0		2,5						3,0							
	d/d	2,0		3,5		4,0						5,0							
8 / 6 N/mm²	w/w w/d	1,5		3,0		4,0						5,0							
	d/d	3,0		5,0		6,5						7,5							
10 / 8 N/mm²	w/w w/d	2,0		4,0		5,0						6,5							
	d/d	4,0		7,0		8,5						9,0							

[1)] The minimum compressive strength of the single brick must not be less than 80% of the mean compressive strength.

[2)] For temperature range 72/120°C: $N_{Rk\,(72/120°C)} = 0{,}83 \cdot N_{Rk\,(50/80°C)}$.

Table C112.2: Characteristic resistance to pull-out failure or brick breakout failure of a single anchor under tension loading (Push through installation)

Anchor rod		**M10**	**M12**	**M16**
Perforated sleeve UPM SH K		**18x130/200**		**22x130/200**
$N_{Rk} = N_{Rk,p} = N_{Rk,b} = N_{Rk,p,c} = N_{Rk,b,c}$ [kN]; temperature range 50/80°C [2)]				
Mean compressive strength/ Min. compressive strength single brick [1)]	Use conditions			
5 / 4 N/mm²	w/w w/d	2,5		3,0
	d/d	4,0		5,0
8 / 6 N/mm²	w/w w/d	4,0		5,0
	d/d	6,5		7,5
10 / 8 N/mm²	w/w w/d	5,0		6,5
	d/d	8,5		9,0

[1)] The minimum compressive strength of the single brick must not be less than 80% of the mean compressive strength.

[2)] For temperature range 72/120°C: $N_{Rk\,(72/120°C)} = 0{,}83 \cdot N_{Rk\,(50/80°C)}$.

Factor for job site tests and displacements see annex C123.

Light-weight concrete solid block Vbl, EN 771-3:2011+A1:2015

Table C113.1: Characteristic resistance to local brick failure or brick edge failure of a single anchor under shear loading (Pre-positioned installation)

Anchor rod		M6	M8	M6	M8	-		M8	M10	M8	M10	-		M12	M16	M12	M16	M12	M16
Internal threaded anchor UPM-I		-		-		M6	M8	-		-		M10	M12	-		-		-	
						11x85						15x85							
Perforated sleeve UPM SH K		12x50		12x85		16x85				16x130		20x85				20x130		20x200	
$V_{Rk} = V_{Rk,b} = V_{Rk,c,II} = V_{Rk,c,\perp}$ **[kN]; temperature range 50/80°C and 72/120°C**																			
Mean compressive strength / Min. compressive strength single brick [1]	Use conditions																		
5 / 4 N/mm²	w/w w/d d/d	2,0	3,0	2,0	3,0	2,0		3,5				4,5							
8 / 6 N/mm²	w/w w/d d/d	3,0	4,5	3,0	4,5	3,0		5,5				6,5							
10 / 8 N/mm²	w/w w/d d/d	4,0	6,0	4,0	6,0	4,0		7,0				8,5							

[1] The minimum compressive strength of the single brick must not be less than 80% of the mean compressive strength.

Table C113.2: Characteristic resistance to local brick failure or brick edge failure of a single anchor under shear loading (Push through installation)

Anchor rod		**M10**		**M12**		**M16**	
Perforated sleeve UPM SH K		**18x130/200**				**22x130/200**	
$V_{Rk} = V_{Rk,b} = V_{Rk,c,II} = V_{Rk,c,\perp}$ **[kN]; temperature range 50/80°C and 72/120°C**							
Mean compressive strength / Min. compressive strength single brick [1]	Use conditions						
5 / 4 N/mm²	w/w w/d d/d	3,5				4,5	
8 / 6 N/mm²	w/w w/d d/d	5,5				6,5	
10 / 8 N/mm²	w/w w/d d/d	7,0				8,5	

[1] The minimum compressive strength of the single brick must not be less than 80% of the mean compressive strength.

Factor for job site tests and displacements see annex C123.

Light-weight concrete solid block Vbl, EN 771-3:2011+A1:2015

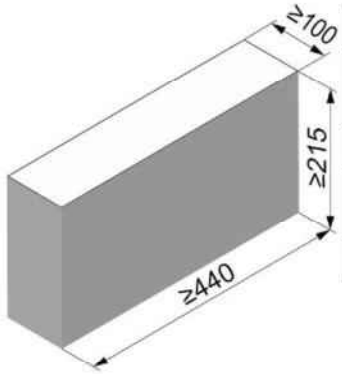

Producer		Roadstone wood		
Nominal dimensions	[mm]	length L	width W	height H
		≥ 440	≥ 100	≥ 215
Mean gross dry density ρ	[kg/dm³]	≥ 2,0		
Mean compressive strength / Min. compressive strength single brick [1]	[N/mm²]	5 / 4 or 8 / 6 or 10 / 8 or 12,5 / 10		
Standard or annex		EN 771-3:2011+A1:2015		

Table C114.1: Installation parameters

Anchor rod			M6		M8		M10		M12		M16	
Anchor rod without perforated sleeve												
Effective anchorage depth	h_{ef}	[mm]	50	70	50	70	50	70	50	70	50	70
Max. installation torque	max T_{inst}	[Nm]	4		10							
General installation parameters												
Edge distance	$c_{min} = c_{cr}$	[mm]	100									
Spacing	s_{min} ∥	[mm]	75									
	s_{cr} ∥	[mm]	3x h_{ef}									
	s_{min} ⊥	[mm]	75									
	s_{cr} ⊥	[mm]	3x h_{ef}									
Drilling method												
Hammer drilling with hard metal hammer drill												

[1] The minimum compressive strength of the single brick must not be less than 80% of the mean compressive strength.

Table C114.2: Group factors

Anchor rod			M6	M8	M10	M12	M16
Group factors	$\alpha_{g,N}$ (s_{min} ∥)	[-]	1,6				
	$\alpha_{g,V}$ (s_{min} ∥)	[-]	1,3				
	$\alpha_{g,N}$ (s_{min} ⊥)	[-]	1,4				
	$\alpha_{g,V}$ (s_{min} ⊥)	[-]	1,3				

Upat injection system UPM 44 for masonry

Performance
Light-weight concrete solid block Vbl, dimensions, installation parameters, Group factors

Annex C114
Appendix 143 / 153

Light-weight concrete solid block Vbl, EN 771-3:2011+A1:2015

Table C115.1: Characteristic resistance to pull-out failure or brick breakout failure of a single anchor under tension loading

Anchor rod		M6	M8	M10	M12	M16
$N_{Rk} = N_{Rk,p} = N_{Rk,b} = N_{Rk,p,c} = N_{Rk,b,c}$ [kN]; temperature range 50/80°C [2]						
Mean compressive strength / Min. compressive strength single brick [1]	Use conditions	Effective anchorage depth h_{ef} [mm] ≥ 50				
5 / 4 N/mm²	w/w | w/d	1,2	1,2			
	d/d	2,0	2,0			
8 / 6 N/mm²	w/w | w/d	1,5	2,0			
	d/d	3,0	3,5			
10 / 8 N/mm²	w/w | w/d	2,0	2,5			
	d/d	4,0	4,5			
12,5 / 10 N/mm²	w/w | w/d	3,0	3,5			
	d/d	5,0	5,5			

[1] The minimum compressive strength of the single brick must not be less than 80% of the mean compressive strength.
[2] For temperature range 72/120°C: $N_{Rk\,(72/120°C)} = 0{,}83 \cdot N_{Rk\,(50/80°C)}$.

Table C115.2: Characteristic resistance to local brick failure or brick edge failure of a single anchor under shear loading

Anchor rod		M6	M8	M10	M12	M16
$V_{Rk} = V_{Rk,b} = V_{Rk,c,II} = V_{Rk,c,\perp}$ [kN]; temperature range 50/80°C and 72/120°C						
Mean compressive strength / Min. compressive strength single brick [1]	Use conditions	Effective anchorage depth h_{ef} [mm] ≥ 50				
5 / 4 N/mm²	w/w | w/d	1,2	1,5	1,5	1,5	1,5
	d/d					
8 / 6 N/mm²	w/w | w/d	2,0	2,0	2,5	2,5	2,5
	d/d					
10 / 8 N/mm²	w/w | w/d	2,5	2,5	3,0	3,0	3,5
	d/d					
12,5 / 10 N/mm²	w/w | w/d	3,0	3,5	4,0	4,0	4,5
	d/d					

[1] The minimum compressive strength of the single brick must not be less than 80% of the mean compressive strength.

Factor for job site tests and displacements see annex C123.

Upat injection system UPM 44 for masonry

Performance
Light-weight concrete solid block Vbl,
Characteristic resistance under tension and shear loading

Annex C115

Light-weight concrete solid block Vbl, EN 771-3:2011+A1:2015

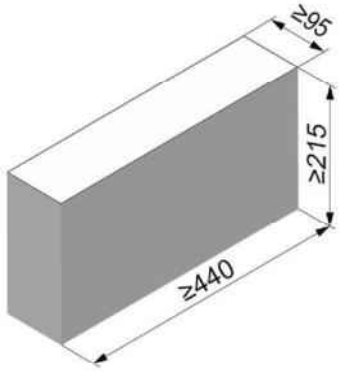

Producer		Tramac		
Nominal dimensions	[mm]	length L	width W	height H
		≥ 440	≥ 95	≥ 215
Mean gross dry density ρ	[kg/dm³]	≥ 2,0		
Mean compressive strength / Min. compressive strength single brick [1)]	[N/mm²]	7,5 / 6 or 10 / 8 or 12,5 / 10 or 15 / 12		
Standard or annex		EN 771-3:2011+A1:2015		

Table C116.1: Installation parameters

Anchor rod			M6		M8		M10		M12		M16	
Anchor rod without perforated sleeve												
Effective anchorage depth	h_{ef}	[mm]	50	70	50	70	50	70	50	70	50	70
Max. installation torque	max T_{inst}	[Nm]	4		10							
General installation parameters												
Edge distance	$c_{min} = c_{cr}$	[mm]	60									
Spacing	s_{min} ∥		75									
	s_{cr} ∥		3x h_{ef}									
	s_{min} ⊥		75									
	s_{cr} ⊥		3x h_{ef}									
Drilling method												
Hammer drilling with hard metal hammer drill												

[1)] The minimum compressive strength of the single brick must not be less than 80% of the mean compressive strength.

Table C116.2: Group factors

Anchor rod			M6	M8	M10	M12	M16
Group factors	$\alpha_{g,N}$ (s_{min} ∥)	[-]	1,9				
	$\alpha_{g,V}$ (s_{min} ∥)		1,4				
	$\alpha_{g,N}$ (s_{min} ⊥)		1,9				
	$\alpha_{g,V}$ (s_{min} ⊥)		1,4				

Light-weight concrete solid block Vbl, EN 771-3:2011+A1:2015

Table C117.1: Characteristic resistance to pull-out failure or brick breakout failure of a single anchor under tension loading

Anchor rod		M6		M8		M10		M12		M16	
$N_{Rk} = N_{Rk,p} = N_{Rk,b} = N_{Rk,p,c} = N_{Rk,b,c}$ [kN]; temperature range 50/80°C [2]											
Mean compressive strength / Min. compressive strength single brick [1]	Use conditions	Effective anchorage depth h_{ef} [mm]									
		50	70	50	70	50	70	50	70	50	70
7,5 / 6 N/mm²	w/w w/d	1,5	2,0	1,5	2,0	1,5	2,0	1,5	2,0	1,5	2,0
	d/d	2,5	3,5	2,5	3,5	2,5	3,5	2,5	3,5	2,5	3,5
10 / 8 N/mm²	w/w w/d	2,0	2,5	2,0	2,5	2,0	3,0	2,0	3,0	2,0	3,0
	d/d	3,5	4,5	3,5	4,5	3,5	5,0	3,5	5,0	3,5	5,0
12,5 / 10 N/mm²	w/w w/d	2,5	3,5	2,5	3,5	2,5	3,5	2,5	3,5	2,5	3,5
	d/d	4,5	6,0	4,5	6,0	4,5	6,0	4,5	6,0	4,5	6,0
15 / 12 N/mm²	w/w w/d	3,0	4,0	3,0	4,0	3,0	4,5	3,0	4,5	3,0	4,5
	d/d	5,0	7,0	5,0	7,0	5,0	7,5	5,0	7,5	5,0	7,5

[1] The minimum compressive strength of the single brick must not be less than 80% of the mean compressive strength.

[2] For temperature range 72/120°C: $N_{Rk\,(72/120°C)} = 0{,}83 \cdot N_{Rk\,(50/80°C)}$.

Table C117.2: Characteristic resistance to local brick failure or brick edge failure of a single anchor under shear loading

Anchor rod		M6	M8	M10	M12	M16
$V_{Rk} = V_{Rk,b} = V_{Rk,c,II} = V_{Rk,c,\perp}$ [kN]; temperature range 50/80°C and 72/120°C						
Mean compressive strength / Min. compressive strength single brick [1]	Use conditions	Effective anchorage depth h_{ef} [mm] ≥ 50				
7,5 / 6 N/mm²	w/w w/d	2,0	2,0	2,0	1,5	1,5
	d/d					
10 / 8 N/mm²	w/w w/d	2,5	2,5	3,0	2,5	2,5
	d/d					
12,5 / 10 N/mm²	w/w w/d	3,5	3,5	4,0	3,0	3,0
	d/d					
15 / 12 N/mm²	w/w w/d	4,0	4,0	4,5	3,5	3,5
	d/d					

[1] The minimum compressive strength of the single brick must not be less than 80% of the mean compressive strength.

Factor for job site tests and displacements see annex C123.

Autoclaved aerated concrete (cylindrical drill hole), EN 771-4:2011+A1:2015

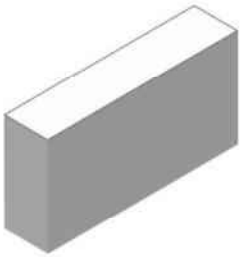

Producer		e.g. Ytong		
Mean gross dry density ρ	[kg/dm³]	0,35	0,5	0,65
Mean compressive strength / Min. compressive strength single brick [1)]	[N/mm²]	2,5 / 2	5 / 4	8 / 6
Standard or annex		EN 771-4:2011+A1:2015		

Table C118.1: Installation parameters

Anchor rod			**M6**		**M8**		**M10**		**M12**		**M16**		-		-	
Internal threaded anchor UPM-I			-		-		-		-		-		**M6**	**M8**	**M10**	**M12**
													11x85		**15x85**	
Anchor rod and internal threaded anchor UPM-I without perforated sleeve																
Effective anchorage depth	h_{ef}	[mm]	100	200	100	200	100	200	100	200	100	200	85			
Max. installation torque	max T_{inst}	[Nm]	1	4	1	8	2	12	2	16	2	20	1		2	
General installation parameters																
Edge distance	$c_{min} = c_{cr}$	[mm]	100													
Spacing	s_{cr} ∥ = s_{min} ∥		250													
	h_{ef}=200mm s_{min} ∥		80													
	h_{ef}=200mm s_{cr} ∥		3x h_{ef}													
	s_{cr} ⊥ = s_{min} ⊥		250													
	h_{ef}=200mm s_{min} ⊥		80													
	h_{ef}=200mm s_{cr} ⊥		3x h_{ef}													
Drilling method																
Hammer drilling with hard metal hammer drill																

[1)] The minimum compressive strength of the single brick must not be less than 80% of the mean compressive strength.

Table C119.1: Group factors for autoclaved aerated concrete (Min. compressive strength single brick = 2 N/mm²)

Anchor rod			M6	M8	M10	M12	M16	-	-
Internal threaded anchor UPM-I			-	-	-	-	-	M6 / M8	M10 / M12
								11x85	15x85
Group factors	h_{ef}=200 $\alpha_{g,N}$ (s_{min} II)	[-]	1,6					-[1]	-[1]
	h_{ef}=200 $\alpha_{g,V}$ (s_{min} II)		1,1					-[1]	-[1]
	$\alpha_{g,N}$ II, $\alpha_{g,V}$ (s_{min} II)		2,0						
	h_{ef}=200 $\alpha_{g,N}$ (s_{min} ⊥)		1,6					-[1]	-[1]
	h_{ef}=200 $\alpha_{g,V}$ (s_{min} ⊥)		0,8					-[1]	-[1]
	$\alpha_{g,N}$ ⊥, $\alpha_{g,V}$ (s_{min} ⊥)		2,0						

[1] No performance assessed.

Table C119.2: Group factors for autoclaved aerated concrete (Min. compressive strength single brick = 4 N/mm²)

Anchor rod			M6	M8	M10	M12	M16	-	-
Internal threaded anchor UPM-I			-	-	-	-	-	M6 / M8	M10 / M12
								11x85	15x85
Group factors	h_{ef}=200 $\alpha_{g,N}$ (s_{min} II)	[-]	0,7					-[1]	-[1]
	h_{ef}=200 α_{gV} (s_{min} II)		2,0					-[1]	-[1]
	$\alpha_{g,N}$ II, α_{gV} (s_{min} II)		2,0						
	h_{ef}=200 $\alpha_{g,N}$ (s_{min} ⊥)		0,7					-[1]	-[1]
	h_{ef}=200 $\alpha_{g,V}$ (s_{min} ⊥)		1,2					-[1]	-[1]
	$\alpha_{g,N}$ ⊥, α_{gV} (s_{min} ⊥)		2,0						

[1] No performance assessed.

Table C119.3: Group factors for autoclaved aerated concrete (Min. compressive strength single brick = 6 N/mm²)

Anchor rod			M6	M8	M10	M12	M16	-	-
Internal threaded anchor UPM-I			-	-	-	-	-	M6 / M8	M10 / M12
								11x85	15x85
Group factors	h_{ef}=200 $\alpha_{g,N}$ (s_{min} II)	[-]	0,7					-[1]	-[1]
	h_{ef}=200 $\alpha_{g,V}$ (s_{min} II)		2,0					-[1]	-[1]
	$\alpha_{g,N}$ II, $\alpha_{g,V}$ (s_{min} II)		2,0						
	h_{ef}=200 $\alpha_{g,N}$ (s_{min} ⊥)		0,7					-[1]	-[1]
	h_{ef}=200 $\alpha_{g,V}$ (s_{min} ⊥)		1,2					-[1]	-[1]
	$\alpha_{g,N}$ ⊥, $\alpha_{g,V}$ (s_{min} ⊥)		2,0						

[1] No performance assessed.

Autoclaved aerated concrete (cylindrical drill hole), EN 771-4:2011+A1:2015

Table C120.1: Characteristic resistance to pull-out failure or brick breakout failure of a single anchor under tension loading

Anchor rod		M6	M8	M10	M12	M16	-	-
Internal threaded anchor UPM-I		-	-	-	-	-	M6 M8	M10 M12
							11x85	15x85

$N_{Rk} = N_{Rk,p} = N_{Rk,b} = N_{Rk,p,c} = N_{Rk,b,c}$ [kN]; temperature range 50/80°C [3]														
Mean compressive strength / Min. compressive strength single brick [2]	Use conditions	Effective anchorage depth h_{ef} [mm]												
		100	200	100	200	100	200	100	200	100	200	85		
2,5 / 2 N/mm²	w/w w/d	1,2	1,2	1,5	2,0	1,5	3,0	1,5	3,0	2,0	3,0	1,5		1,5
	d/d	1,5	3,0	1,5	3,0	1,5	3,5	2,0	4,0	2,0	4,0	1,5		1,5
5 / 4 N/mm²	w/w w/d	1,2	-[1]	2,0	1,5	2,5	3,5	2,5	3,5	2,0	3,5	2,0		1,5
	d/d	1,5	-[1]	2,0	3,0	3,0	5,0	2,5	5,0	2,0	5,0	2,0		1,5
8 / 6 N/mm²	w/w w/d	1,5	-[1]	3,0	2,5	4,5	5,0	4,5	7,0	3,0	8,5	3,5		2,5
	d/d	1,5	-[1]	3,5	4,0	5,0	7,0	5,0	9,0	3,0	11,5	3,5		2,5

[1] No performance assessed.

[2] The minimum compressive strength of the single brick must not be less than 80% of the mean compressive strength.

[3] For temperature range 72/120°C: $N_{Rk\,(72/120°C)} = 0{,}83 \cdot N_{Rk\,(50/80°C)}$.

Table C120.2: Characteristic resistance to local brick failure or brick edge failure of a single anchor under shear loading

Anchor rod		M6	M8	M10	M12	M16	-	-
Internal threaded anchor UPM-I		-	-	-	-	-	M6 M8	M10 M12
							11x85	15x85

$V_{Rk} = V_{Rk,b} = V_{Rk,c,II} = V_{Rk,c,\perp}$ [kN]; temperature range 50/80°C and 72/120°C													
Mean compressive strength / Min. compressive strength single brick [2]	Use conditions	Effective anchorage depth h_{ef} [mm]											
		100	200	100	200	100	200	100	200	100	200	85	
2,5 / 2 N/mm²	w/w w/d d/d	1,2	1,2	1,2	1,2	1,2	1,2	1,5	1,2	1,2	1,2	1,2	1,5
5 / 4 N/mm²	w/w w/d d/d	2,0	-[1]	2,5	2,0	2,0	2,0	2,5	2,0	2,0	2,0	2,0	2,5
8 / 6 N/mm²	w/w w/d d/d	2,5	-[1]	3,0	2,5	3,0	3,0	3,5	4,0	4,5	4,5	2,5	3,5

[1] No performance assessed.

[2] The minimum compressive strength of the single brick must not be less than 80% of the mean compressive strength

Factor for job site tests and displacements see annex C123.

Autoclaved aerated concrete (conical drill hole with special drill bit PBB), EN 771-4:2011+A1:2015

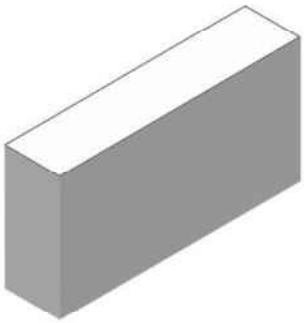

Producer		e.g. Ytong		
Mean gross dry density ρ	[kg/dm³]	0,35	0,5	0,65
Mean compressive strength / Min. compressive strength single brick [1)]	[N/mm²]	2,5 / 2	5 / 4	8 / 6
Standard or annex		EN 771-4:2011+A1:2015		

Table C121.1: Installation parameters

Anchor rod			**M8**		**M10**		**M12**		-	
Internal threaded anchor UPM-I			-	-	-	-	-	-	**M6**	**M8**
									11x85	
Anchor rod and internal threaded anchor UPM-I without perforated sleeve										
Effective anchorage depth	h_{ef}	[mm]	75	95	75	95	75	95	85	
Max. installation torque	max T_{inst}	[Nm]	2							
General installation parameters										
Edge distance	$c_{min} = c_{cr}$	[mm]	120	150	120	150	120	150	150	
Spacing	s_{cr} II = s_{min} II		240	300	240	300	240	300	300	
	$s_{cr} \perp = s_{min} \perp$		240	250	240	250	240	250	250	
Drilling method										
Hammer drilling with hard metal hammer drill										

[1)] The minimum compressive strength of the single brick must not be less than 80% of the mean compressive strength.

Table C121.2: Group factors

Anchor rod			**M8**		**M10**		**M12**		-	
Internal threaded anchor UPM-I			-	-	-	-	-	-	**M6**	**M8**
									11x85	
Group factors	$\alpha_{g,N}$ (s_{min} II)	[-]	2							
	$\alpha_{g,V}$ (s_{min} II)									
	$\alpha_{g,N}$ ($s_{min} \perp$)									
	$\alpha_{g,V}$ ($s_{min} \perp$)									

Upat injection system UPM 44 for masonry

Performance
Autoclaved aerated concrete (conical drill hole with special drill bit PBB), dimensions, installation parameters, Group factors

Annex C121
Appendix 150 / 153

Autoclaved aerated concrete (conical drill hole with special drill bit PBB), EN 771-4:2011+A1:2015

Table C122.1: Characteristic resistance to pull-out failure or brick breakout failure of a single anchor under tension loading

Anchor rod		M8		M10		M12		-	
Internal threaded anchor UPM-I		-	-	-	-	-	-	M6	M8
								11x85	
$N_{Rk} = N_{Rk,p} = N_{Rk,b} = N_{Rk,p,c} = N_{Rk,b,c}$ [kN]; temperature range 50/80°C [2]									
Mean compressive strength / Min. compressive strength single brick [1]	Use conditions	Effective anchorage depth h_{ef} [mm]							
		75	95	75	95	75	95	85	
2,5 / 2 N/mm²	w/w w/d	2,0	2,5	2,0	2,5	2,0	2,5	2,0	
	d/d	2,0	2,5	2,0	2,5	2,0	2,5	2,0	
5 / 4 N/mm²	w/w w/d	3,0	3,5	3,0	3,5	3,0	3,5	3,0	
	d/d	3,0	3,5	3,0	3,5	3,0	3,5	3,0	
8 / 6 N/mm²	w/w w/d	3,5	4,0	3,5	4,0	3,5	4,0	3,5	
	d/d	4,0	4,5	4,0	4,5	4,0	4,5	4,0	

[1] The minimum compressive strength of the single brick must not be less than 80% of the mean compressive strength.

[2] For temperature range 72/120°C: $N_{Rk\,(72/120°C)} = 0{,}83 \cdot N_{Rk\,(50/80°C)}$.

Table C122.2: Characteristic resistance to local brick failure or brick edge failure of a single anchor under shear loading

Anchor rod		M8		M10		M12		-	
Internal threaded anchor UPM-I		-	-	-	-	-	-	M6	M8
								11x85	
$V_{Rk} = V_{Rk,b} = V_{Rk,c,II} = V_{Rk,c,\perp}$ [kN]; temperature range 50/80°C and 72/120°C									
Mean compressive strength / Min. com-pressive strength single brick [1]	Use conditions	Effective anchorage depth h_{ef} [mm]							
		75	95	75	95	75	95	85	
2,5 / 2 N/mm²	w/w w/d	2,5							
	d/d								
5 / 4 N/mm²	w/w w/d	4,5							
	d/d								
8 / 6 N/mm²	w/w w/d	6,0							
	d/d								

[1] The minimum compressive strength of the single brick must not be less than 80% of the mean compressive strength.

Factor for job site tests and displacements see annex C123.

β-factors for job site tests; displacements

Table C123.1: β-factors for job site tests

use conditions		w/w and w/d		d/d	
temperature range [°C]		50/80	72/120	50/80	72/120
Material	Size	β-factors			
solid units	M6	0,55	0,46	0,96	0,80
	M8	0,57	0,51		
	M10	0,59	0,52		
	M12 UPM-I 11x85	0,60	0,54		
	M16 UPM-I 15x85	0,62	0,52		
	UPM SH 16x85 K	0,55	0,46		
hollow units	all sizes	0,86	0,72	0,96	0,80
Autoclaved aerated concrete cylindrical drill hole	all sizes	0,73	0,73	0,81	0,81
Autoclaved aerated concrete conical drill hole	all sizes	0,66	0,59	0,73	0,66

Table C123.2: Displacements

Material	N [kN]	δN_0 [mm]	δN_∞ [mm]	V [kN]	δV_0 [mm]	δV_∞ [mm]
solid units and autoclaved aerated concrete h_{ef}=100mm	$\frac{N_{Rk}}{1,4 * \gamma_{Mm}}$	0,03	0,06	$\frac{V_{Rk}}{1,4 * \gamma_{Mm}}$	0,82	0,88
hollow units	$\frac{N_{Rk}}{1,4 * \gamma_{Mm}}$	0,48	0,06	$\frac{V_{Rk}}{1,4 * \gamma_{Mm}}$	1,71	2,56
solid brick Mz NF Annex C4 - C7	$\frac{N_{Rk}}{1,4 * \gamma_{Mm}}$	0,74	1,48	$\frac{V_{Rk}}{1,4 * \gamma_{Mm}}$	1,23	1,85
solid brick KS NF Annex C14 / C15	$\frac{N_{Rk}}{1,4 * \gamma_{Mm}}$	0,20	0,40	$\frac{V_{Rk}}{1,4 * \gamma_{Mm}}$	0,91	1,37
AAC h_{ef}=200 mm Annex C118 - C120	$\frac{N_{Rk}}{1,4 * \gamma_{Mm}}$	1,03	2,06	$\frac{V_{Rk}}{1,4 * \gamma_{Mm}}$	1,25	1,88
brick Annex C102 / C103	$\frac{N_{Rk}}{1,4 * \gamma_{Mm}}$	0,03	0,06	$\frac{V_{Rk}}{1,4 * \gamma_{Mm}}$	6,44	9,66

For anchorage in autoclaved aerated concrete (AAC), the partial factor γ_{MAAC} shall be used instead of γ_{Mm}.

Table C124.1: Chracteristic values under tension and shear loading under fire exposure; considering all failure modes

Brick			Solid brick Mz, NF, acc. to Annex C4			Solid calcium silicate brick KS, NF, acc. to Annex C14			Perforated calcium silicate brick KSL, acc. to Annex C24			Vertical perforated brick HLz, acc. to Annex C28			Vertical perforated brick HLz, acc. to Annex C30			Autoclaved aerated concrete, acc. to Annex C118			
Mean compressive strength / Min. comp. strength single brick [3]			≥ 15 / ≥ 12			≥ 15 / ≥ 12			≥ 10 / ≥ 8			≥ 5 / ≥ 4			≥ 7,5 / ≥ 6			≥ 2,5 / ≥ 2			
Size			M8	M10	M12	M8	M10	M12	M8	M10	M12	M8	M10	M12	M8	M10	M12	M8	M10	M12	M16
Perforated Sleeve			-			-			16x130		16x 130	16x130		20x 130	16x85		20x 85	-			
Perforated Sleeve for bridging of unbearing layer			-			-			-		20x 200	-		20x 200	16x130		20x 130	-			
h_{ef}		[mm]	≥ 80			≥ 50			≥ 130			≥ 130			≥ 85			≥ 100			
Characteristic resistance to failure under tension loading																					
$N_{Rk,s,fi} = N_{Rk,p,fi} = N_{Rk,b,fi}$ [2]	R30	[kN]	0,82			0,32			1,07	1,09	1,10	0,31			0,28	0,30	0,35	0,84	0,82	0,80	0,80
	R60		0,73			0,31			0,66	0,61	0,56	0,22			0,19	0,22	0,22	0,71	0,67	0,63	0,63
	R90		0,64			0,29			0,25	0,13	- [1]	0,13			0,10	0,10	0,10	0,58	0,51	0,45	0,45
	R120		0,59			0,28			- [1]	- [1]	- [1]	- [1]			- [1]	- [1]	- [1]	- [1]	- [1]	- [1]	- [1]
Characteristic resistance to failure under shear loading [2]																					
without lever arm																					
$V_{Rk,s,fi}$	R30	[kN]	0,82			0,32			1,07	1,09	1,10	0,31			0,28	0,30	0,35	1,10	1,75	2,54	4,74
	R60		0,73			0,31			0,66	0,61	0,56	0,22			0,19	0,22	0,22	0,86	1,37	1,99	3,71
	R90		0,64			0,29			0,25	0,13	- [1]	0,13			0,10	0,10	0,10	0,62	0,99	1,44	2,68
	R120		0,59			0,28			- [1]	- [1]	- [1]	- [1]			- [1]	- [1]	- [1]	- [1]	- [1]	- [1]	- [1]
with lever arm																					
$M^0_{Rk,s,fi}$	R30	[Nm]	0,83	1,05	1,27	0,33	0,42	0,50	1,09	1,40	1,71	0,32	0,40	0,48	0,29	0,39	0,54	1,12	2,26	3,95	10,0
	R60		0,74	0,93	1,13	0,31	0,39	0,47	0,67	0,78	0,86	0,22	0,28	0,34	0,19	0,28	0,34	0,87	1,77	3,20	7,87
	R90		0,65	0,82	0,99	0,29	0,37	0,44	0,26	0,17	- [1]	0,13	0,16	0,20	0,10	0,12	0,15	0,63	1,28	2,24	5,69
	R120		0,60	0,76	0,92	0,28	0,35	0,43	- [1]	- [1]	- [1]	- [1]	- [1]	- [1]	- [1]	- [1]	- [1]	- [1]	- [1]	- [1]	- [1]
General installation Parameters																					
Edge distance and spacing	$c_{cr,fi}$	[mm]	100			60			80			80			100			200			
	$s_{cr,fi}$		320			200			520			340			520			400			

[1] No performance assessed.

[2] $V_{Rk,b,fi} = N_{Rk,b,fi}$

[3] The minimum compressive strength of the single brick must not be less than 80% of the mean compressive strength.

In absence of national regulations, the recommended partial factor $\gamma_{M,fi} = 1,0$.

Upat injection system UPM 44 for masonry

Performance
Characteristic values under tension and shear loading under fire exposure

Annex C124
Appendix 153 / 153